3138

Encyclopedia of ELECTRONIC CIRCUITS

Volume 2

Rudolf F. Graf

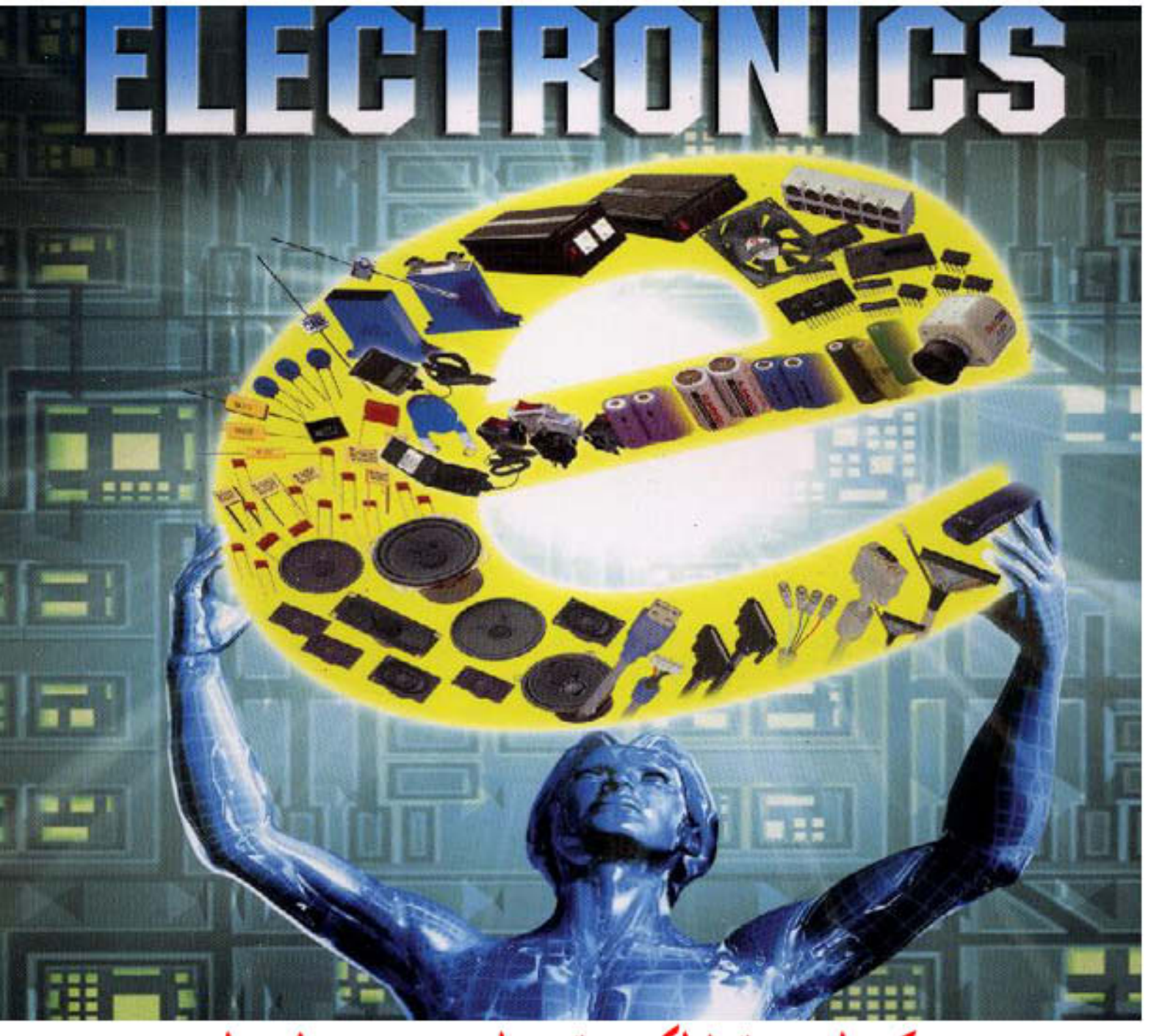

مركز الموسوعة الإلكترونية – المهندس محمد نذير المتني

استيراد وتوزيع كافة أنواع القطع و التجهيزات الإلكترونية – نشر وتوزيع كتب الكترونية

نحن نستورد مباشرة أجود الأنواع من أفضل الشركات العالمية

دمشق – حلبوني – شارع مسلم البارودي – هاتف 2451161–2221161 فاكس 2239468

E.mail:nazir@matni.com www.matni.com

NAZIR MATNI ELECTRONICS

HALBOUNI, MOSALAM BAROUDI STR., DIAB BLDG. FL/1,P.O.BOX:12071

DAMASCUS - SYRIA

TEL:+963-11-2221161 FAX:+963-11-2239468

E-Mail: nazir@matni.com www.matni.com

Importers / Exporters / Distributors / Retailers / Mail orders :
All kinds Electronic Components , Parts , Devices , ...

CONTENTS

	Introduction	vii
1	Alarm and Security Circuits	1
2	Amplifiers	5
3	Analog-to-Digital Converters	23
4	Annunciators	32
5	Audio Mixers, Crossovers and Distribution Circuits	35
6	Audio Signal Amplifiers	41
7	Automotive Circuits	48
8	Battery Chargers and Zappers	64
9	Battery Monitors	74
10	Bridge Circuits	80
11	Burst Generators	86
12	Capacitance Meters	91
13	Circuit Protection Circuits	95
14	Clock Circuits	100
15	Comparators	103
16	Computer Circuits	113
17	Converters	123

18	Counters	133
19	Crystal Oscillators	140
20	Current Meters	152
21	Demodulators	158
22	Descramblers and Decoders	162
23	Detectors	171
24	Digital-to-Analog Converters	179
25	Dip Meters	182
26	Display Circuits	184
27	Drive Circuits	189
28	Electronic Locks	194
29	Emulator Circuits	198
30	Fence Chargers	201
31	Fiberoptics Circuits	204
32	Field Strength Meters	208
33	Filter Circuits	213
34	Flashers and Blinkers	225
35	Flow Detectors	240
36	Fluid and Moisture Detectors	243
37	Frequency Meters	249
38	Frequency Multiplier and Divider Circuits	251
39	Frequency-to-Voltage Converters	255
40	Function Generator Circuits	258
41	Games	275
42	Gas and Smoke Detectors	278
43	Hall Effect Circuits	282
44	Humidity Sensors	285
45	Infrared Circuits	288
46	Instrumentation Amplifiers	293
47	Integrator Circuits	297
48	Intercom Circuits	301
49	Lamp-Control Circuits	304
50	Laser Circuits	313
51	Light-Controlled Circuits	318
52	Logic Amplifiers	332
53	LVDT Circuits	336
54	Measuring and Test Circuits	340
55	Medical Electronics Circuits	347
56	Metal Detectors	350
57	Metronomes	353

58	Miscellaneous Treasures	356
59	Modulator Circuits	368
60	Motor Control Circuits	373
61	Multiplier Circuits	391
62	Noise Reduction Circuits	393
63	Notch Filters	397
64	Operational Amplifier Circuits	404
65	Optically-Coupled Circuits	407
66	Oscillators	420
67	Oscilloscope Circuits	430
68	Peak Detector Circuits	434
69	Phase Sequence Circuits	437
70	Photography-Related Circuits	443
71	Power Amplifiers	450
72	Power Supply Circuits	460
73	Power Supply Circuits (High Voltage)	487
74	Power Supply Monitors	491
75	Probes	498
76	Proximity Sensors	505
77	Pulse Generators	508
78	Radiation Detectors	512
79	Radar Detectors	518
80	Ramp Generators	521
81	Receivers	524
82	Rectifier Circuits	527
83	Relay Circuits	529
84	Resistance/Continuity Meters	533
85	RF Amplifiers	537
86	RF Oscillators	550
87	Sample-and-Hold Circuits	552
88	Sine-Wave Oscillators	560
89	Sirens, Warblers and Wailers	571
90	Sound (Audio) Operated Circuits	580
91	Sound Effect Circuits	585
92	Square-Wave Generators	594
93	Staircase Generator Circuits	601
94	Stereo Balance Circuits	603
95	Strobe Circuits	606
96	Switch Circuits	611
97	Tape Recorder Circuits	613

98	Telephone-Related Circuits	616
99	Temperature Controls	636
100	Temperature Sensors	645
101	Temperature-to-Frequency Converters	651
102	Theremins	654
103	Thermometer Circuits	657
104	Tilt Meters	663
105	Time-Delay Circuits	667
106	Timers	671
107	Tone Control Circuits	682
108	Touch-Switch Circuits	690
	Sources	694
	Index	713

Introduction

Encyclopedia of Electronic Circuits—Volume 2, a companion to Volume 1 published in 1985, contains well over 1400 not-previously covered circuits organized into 108 chapters. For each reference, circuits are listed at the beginning of each chapter. The extensive index further enhances the usefulness of this new work. The browser, as well as the serious researcher looking for a very specific circuit, will be richly rewarded by the context of this volume. A brief explanatory text accompanies almost every entry. The original source for each item is also given so that the reader requiring additional data will know where to find it.

I am most grateful to William Sheets for his many and varied contributions to this book, and to Mrs. Stella Dillon for her fine work at the word processor. These friends and associates of long standing have my sincere thanks for contributing to the successful completion of this book.

1

Alarm and Security Circuits

The sources of the following circuits are contained in the Sources section beginning on page 694. The figure number contained in the box of each circuit correlates to the source entry in the Sources section.

Auto Burglar Alarm
Multiple Alarm Circuit
Differential-Voltage or Current Alarm
Trouble Tone Alert
Photoelectric Alarm System
Alarm Circuit

AUTO BURGLAR ALARM

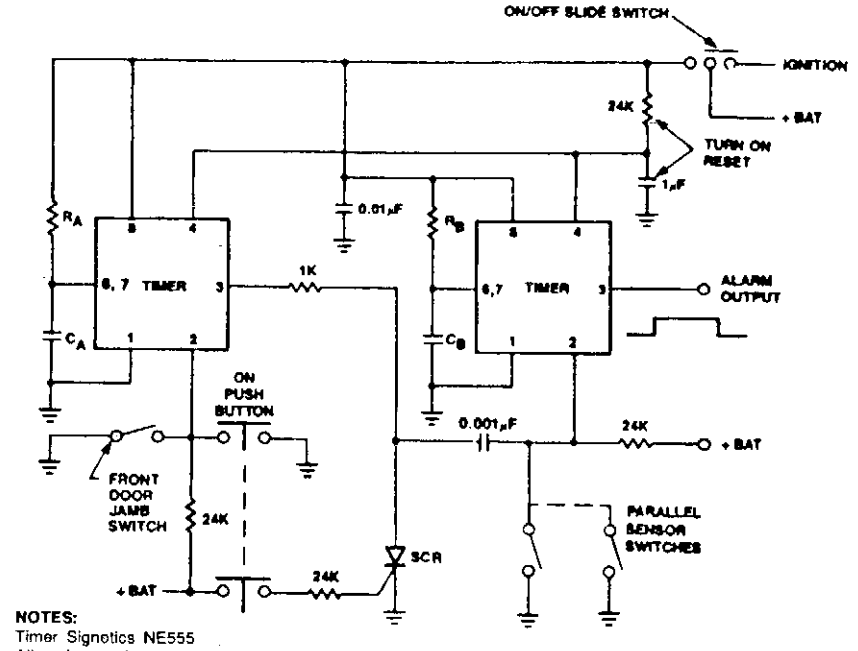

NOTES:
Timer Signetics NE555
All resistor values in ohms

SIGNETICS

Fig. 1-1

Circuit Notes

Timer A produces a safeguard delay, allowing the driver to disarm the alarm and eliminating a vulnerable outside control switch. The SCR prevents timer A from triggering timer B, unless timer B is triggered by strategically-located sensor switches.

MULTIPLE ALARM CIRCUIT

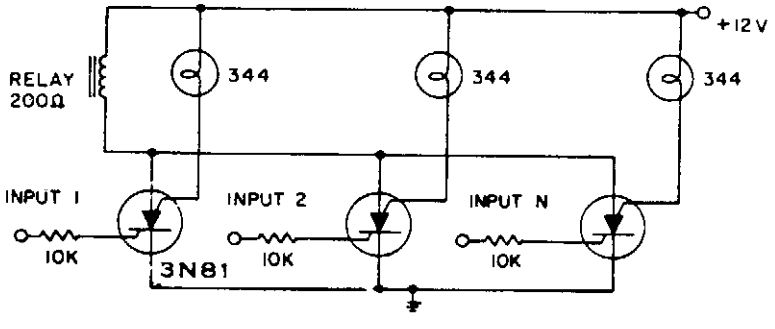

GE

Fig. 1-2

Circuit Notes

Any of several inputs pulls in the common alarm relay with lamps giving visual indication of triggering input. Low resistance lamps decrease input sensitivity.

DIFFERENTIAL VOLTAGE OR CURRENT ALARM

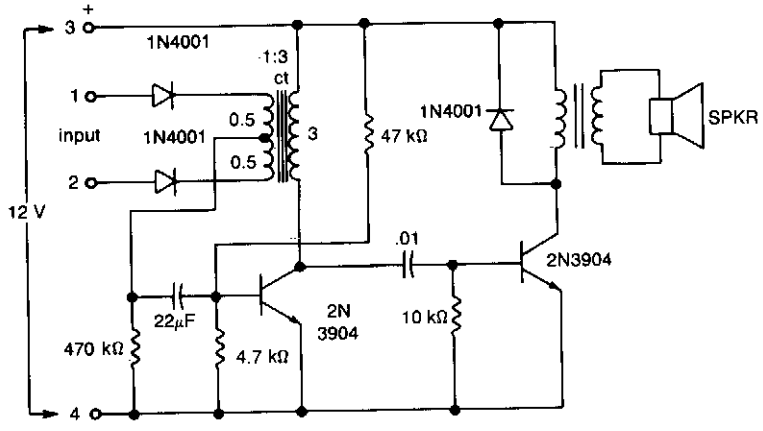

WILLIAM SHEETS

Fig. 1-3

Circuit Notes

The input may be dc or low frequency ac. The output is a distinctive series of audio beeps or a continuous tone, and occurs only when a selected polarity unbalance is present at the input.

TROUBLE TONE ALERT

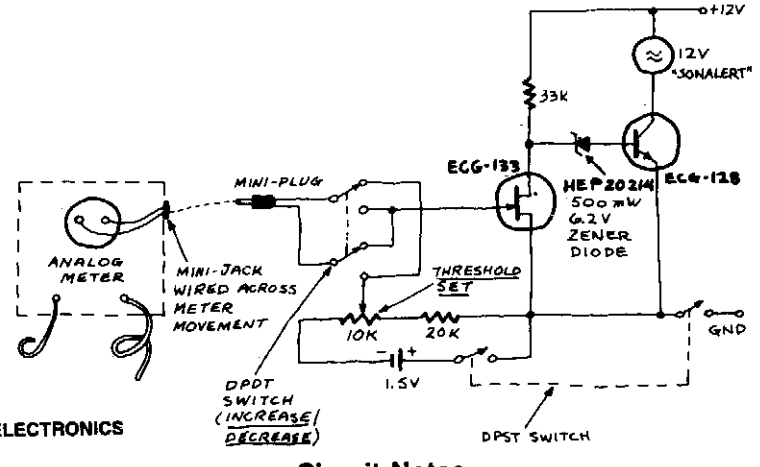

RADIO ELECTRONICS

Fig. 1-4

Circuit Notes

The Trouble Tone Alert is intended for use with analog meters—just wire a "mini" earphone jack directly across the meter movement, plug it in, and you're all set. This device reacts the to the meter-movement driving voltage. It will respond to a change in ac or dc voltage, current, or in resistance. The circuit will respond to an increase or decrease selected by the DPDT switch and is adjusted with the threshold control until the tone from the Sonalert just disappears (with the meter in the circuit being tested, of course).

PHOTOELECTRIC ALARM SYSTEM

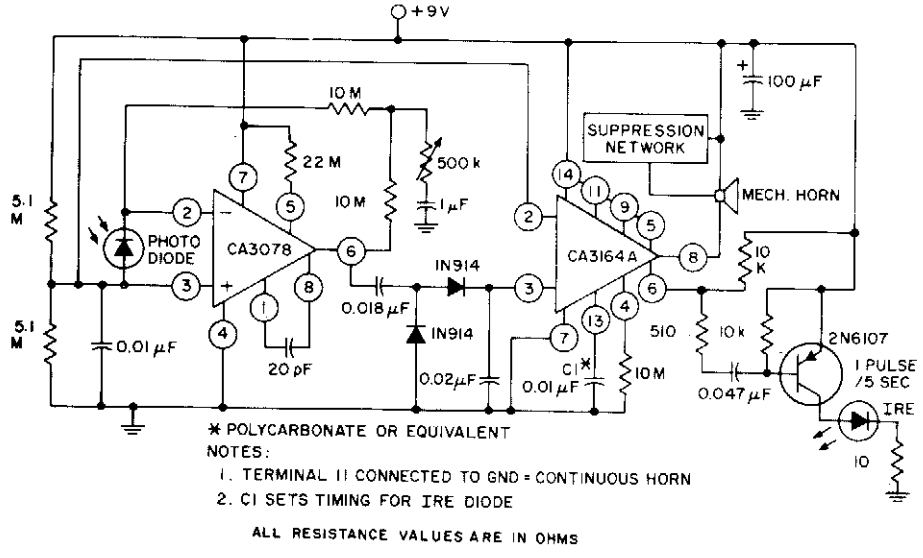

Fig. 1-5

GE/RCA

Circuit Notes

The CA3164A BiMOS detector alarm system and the CA3078 micropower op amp with a photodiode are used as an automatic switch for turning on a night light or sounding a mechanical horn.

ALARM CIRCUIT

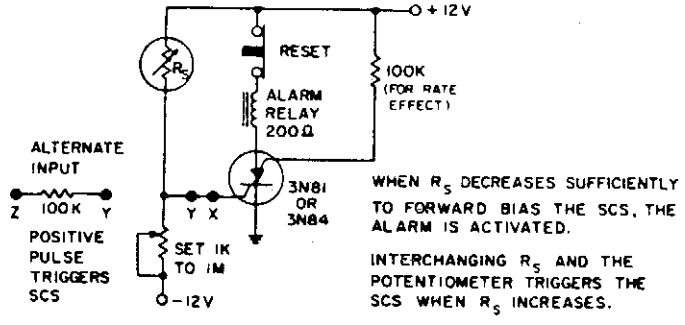

Fig. 1-6

GE

Circuit Notes

Temperature, light, or radiation sensitive resistors up to 1 megohm readily trigger the alarm when they drop below the value of the preset potentiometer. Alternately, 0.75 V at the input to the 100 kΩ triggers the alarm. Connecting SCS between ground and −12 V permits triggering on negative input to G_A.

2

Amplifiers

The sources of the following circuits are contained in the Sources section beginning on page 694. The figure number contained in the box of each circuit correlates to the source entry in the Sources section.

Stable Unity Gain Buffer with Good Speed and High Input Impedance
Chopper Stabilized Amplifier
Ultra-Low-Leakage Preamplifier
FET Input Amplifier
Ultra-High Z_{in} ac Unity Gain Amplifier
Logarithmic Amplifier
Composite Amplifier
Stereo Amplifier with Gain Control
Precision-Weighted Resistor Programmable-Gain Amplifier
Power GaAsFET Amplifier with Single Supply
Linear Amplifiers from CMOS Inverters
Current-Collector Head-Amplifier
Hi-Fi Compander
Two-Wire to Four-Wire Audio Converter
Thermocouple Amplifier
Low-Distortion Audio Limiter
Speech Compressor
Speaker Overload Protector
Audio Automatic Gain Control
Voltage Controlled Attenuator
High-Input-Impedance Differential Amplifier
Audio Q-Multiplier
Automatic Level Control
Pulse-Width Proportional-Controller Circuit
Op Amp Clamping

STABLE UNITY GAIN BUFFER WITH GOOD SPEED AND HIGH INPUT IMPEDANCE

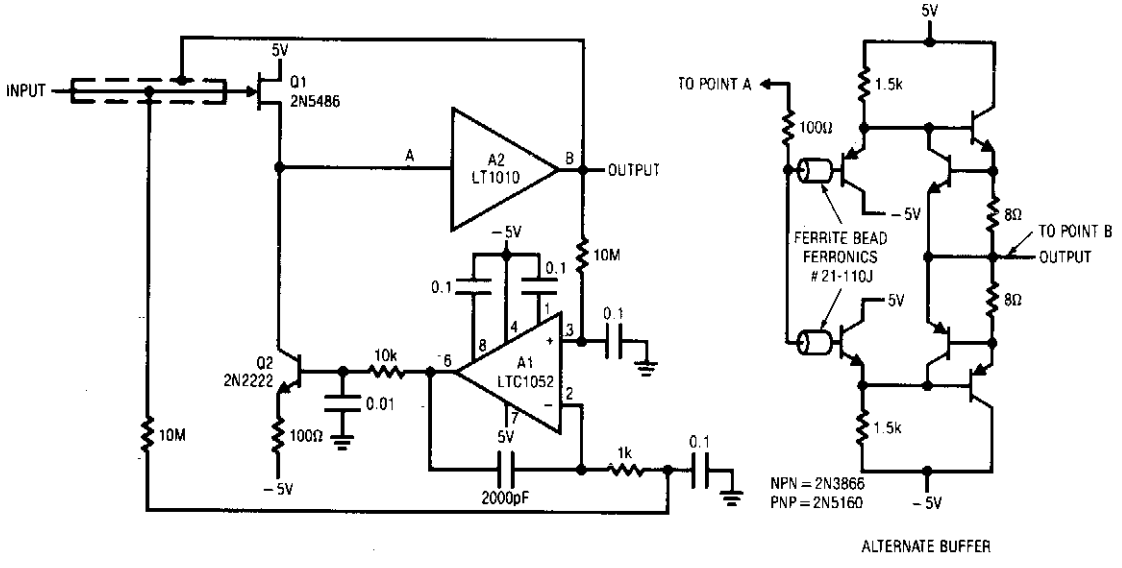

LINEAR TECHNOLOGY CORPORATION

Fig. 2-1

Circuit Notes

Q1 and Q2 constitute a simple, high speed FET input buffer. Q1 functions as a source follower, with the Q2 current source load setting the drain-source channel current. Normally, this open loop configuration would be quite drifty because there is no dc feedback. The LTC1052 contributes this function to stabilize the circuit by comparing the filtered circuit output to a similarly filtered version of the input signal. The amplified difference between these signals is used to set Q2's bias and hence Q1's channel current. This forces Q1's V_{GS} to whatever voltage is required to match the circuit's input and output potentials. The 2000 pF capacitor at A1 provides stable loop compensation. The RC network in A1's output prevents it from seeing high speed edges coupled through Q2's collector-base junction. A2's output is also fed back to the shield around Q1's gate lead, bootstrapping the circuit's effective input capacitance down to less than 1 pF. For very fast requirements, the alternate discrete component buffer shown will be useful. Although its output is current limited at 75 mA, the GHz range transistors employed provide exceptionally wide bandwidth, fast slewing and very little delay.

CHOPPER STABILIZED AMPLIFIER

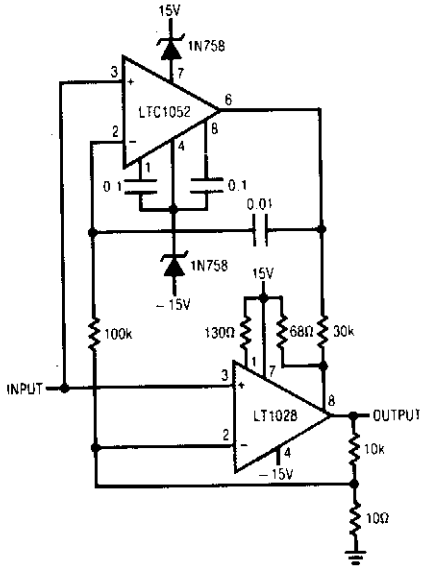

LINEAR TECHNOLOGY CORP.

Fig. 2-2

FET INPUT AMPLIFIER

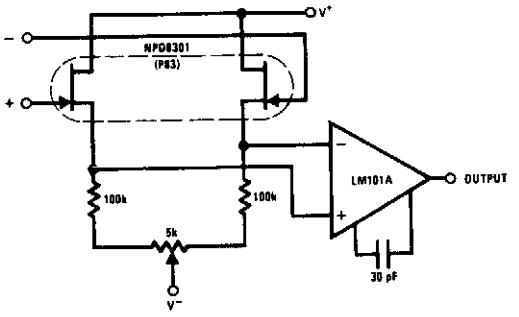

NATIONAL SEMICONDUCTOR CORP.

Circuit Notes

The NPD8301 monolithic-dual provides an ideal low offset, low drift buffer function for the LM101A op amp. The excellent matching characteristics of the NPD8301 track well over its bias current range, thus improving common-mode rejection.

Fig. 2-4

ULTRA-LOW-LEAKAGE PREAMPLIFIER

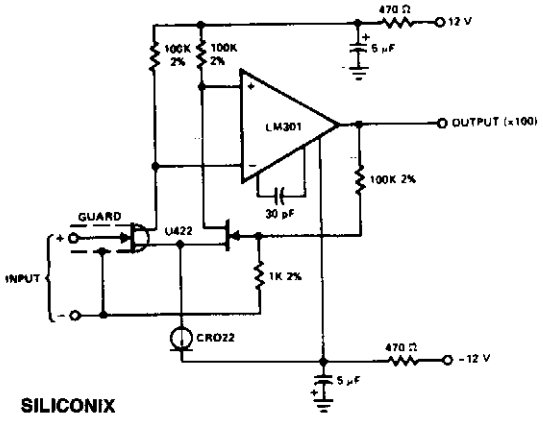

SILICONIX

Circuit Notes

The circuit has an input leakage of only 2 pA typical at 75°C and would be usable with 1 M ohm input resistance.

Fig. 2-3

ULTRA-HIGH Z_{in} AC UNITY GAIN AMPLIFIER

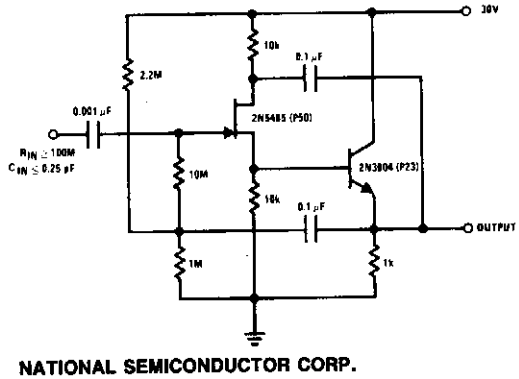

NATIONAL SEMICONDUCTOR CORP.

Circuit Notes

Nothing is left to chance in reducing input capacitance. The 2N5485, which has low capacitance in the first place, is operated as a source follower with bootstrapped gate bias resistor and drain.

Fig. 2-5

LOGARITHMIC AMPLIFIER

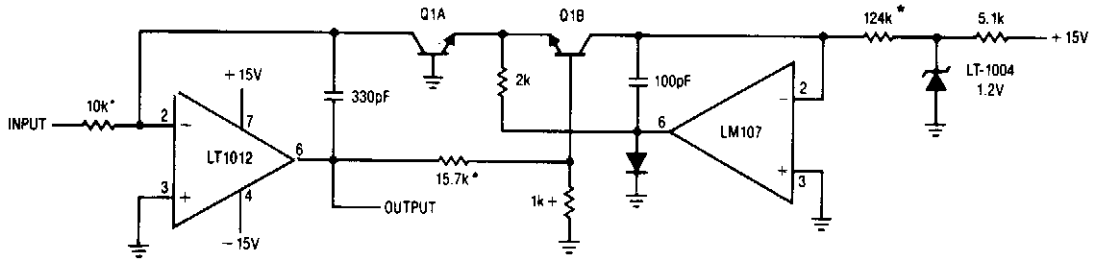

Low bias current and offset voltage of the LT1012 allow 4½ decades of voltage input logging.

LINEAR TECHNOLOGY CORP.

Fig. 2-6

COMPOSITE AMPLIFIER

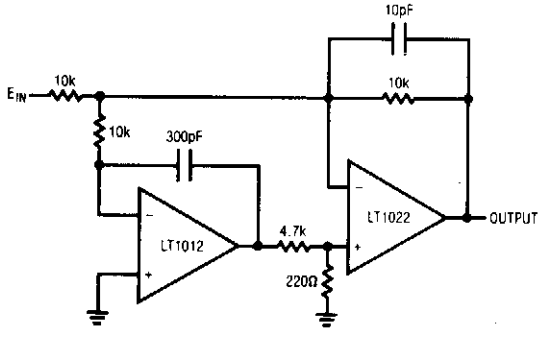

Fig. 2-7

LINEAR TECHNOLOGY CORPORATION

Circuit Notes

The circuit is made up of an LT1012 low drift device, and an LT1022 high speed amplifier. The overall circuit is a unity gain inverter, with the summing node located at the junction of three 10-k resistors. The LT1012 monitors this summing node, compares it to ground, and drives the LT1022's positive input, completing a dc stabilizing loop around the LT1022. The 10 k - 300 pF time constant at the LT1012 limits its response to low frequency signals. The LT1022 handles high frequency inputs while the LT1012 stabilizes the dc operating point. The 4.7 k - 220 ohm divider at the LT1022 prevents excessive input overdrive during start-up. This circuit combines the LT1012's 35 μV offset and 1.5 V/°C drift with the LT1022's 23 V/μs slew rate and 300 kHz full power bandwidth. Bias current, dominated by the LT1012, is about 100 pA.

STEREO AMPLIFIER WITH GAIN CONTROL

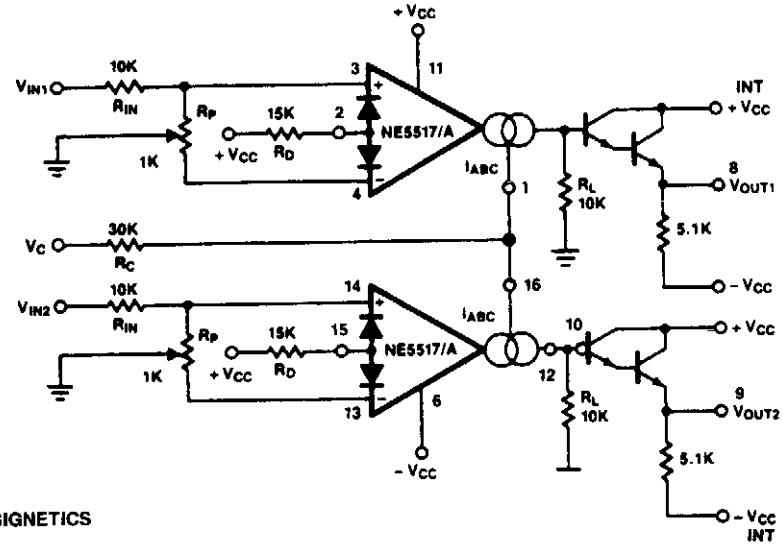

Fig. 2-8

Circuit Notes

Excellent tracking of typical 0.3 dB is easy to achieve. With the potentiometer, R_p, the offset can be adjusted. For ac-coupled amplifiers, the potentiometer may be replaced with two 5.1 k ohm resistors.

PRECISION-WEIGHTED RESISTOR PROGRAMMABLE-GAIN AMPLIFIER

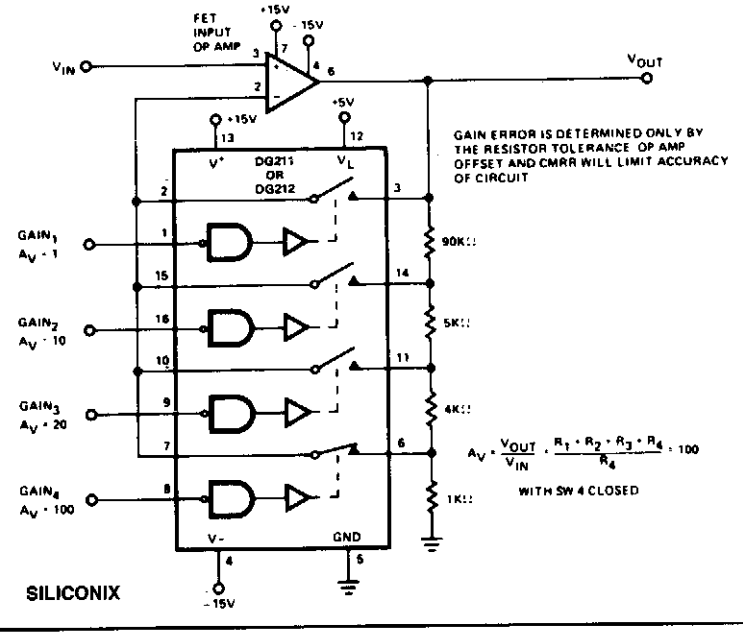

Fig. 2-9

POWER GaAsFET AMPLIFIER WITH SINGLE SUPPLY

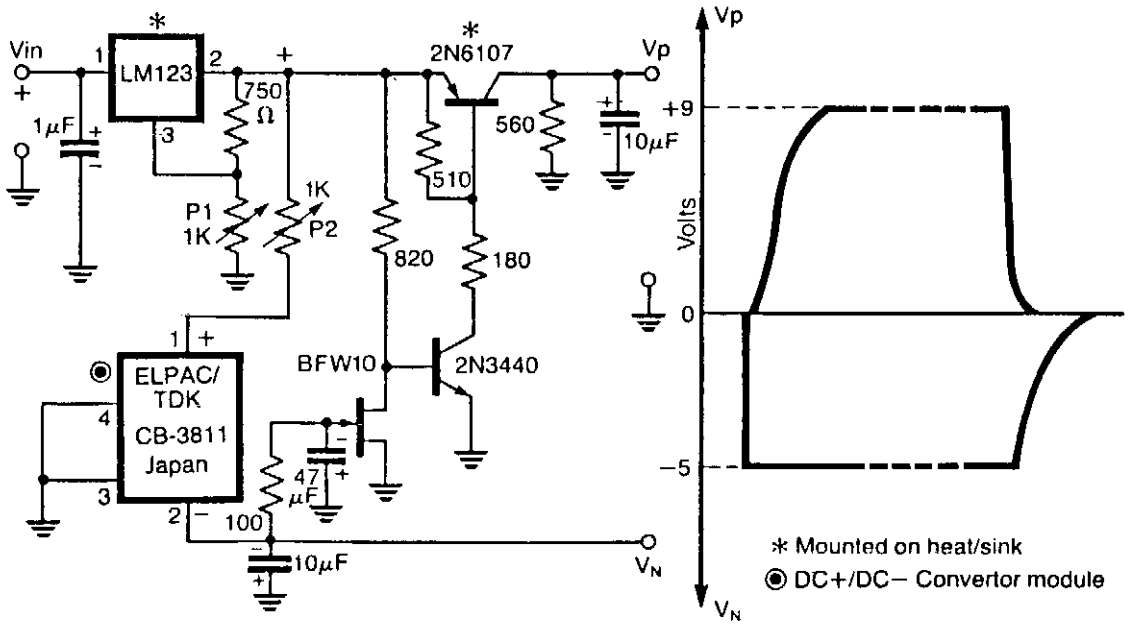

ELECTRIC ENGINEERING

Fig. 2-10

Circuit Notes

The dual regulator circuit operates from a positive supply, which when switched ON powers the gate first, and when switched OFF shuts off the drain first as shown in the figure. This circuit incorporates the LM123, a three terminal positive regulator and a dc+ to dc− converter, the outputs of which power the drains and gates of the power GaAsFETs in a power amplifier relay. The output of the three terminal regulator drives a dc+ to dc− converter whose output biases an N-channel JFET suitably so as to pull the base of the series pass transistor 2N6107 to a level to turn it on. The circuit will turn off the drain supply whenever the negative potential on the Gate fails.

LINEAR AMPLIFIERS FROM CMOS INVERTERS

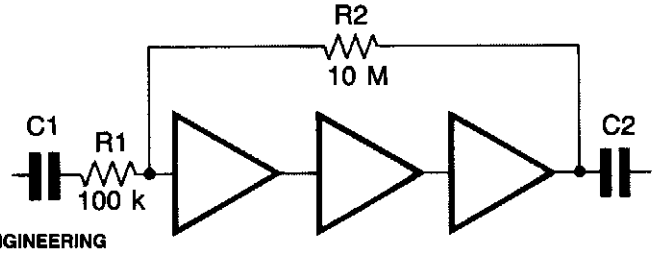

ELECTRONIC ENGINEERING

Fig. 2-11

Circuit Notes

CMOS inverters can be used as linear amplifiers if negative feedback is applied. Best linearity is obtained with feedback applied around three inverters which gives almost perfect linearity up to an output swing of 5 V p-p with a 10 V supply rail. The gain is set by the ratio of R1 and R2 and the values shown are typical for a gain of 100. The high frequency response with the values shown is almost flat to 20 kHz. The frequency response is determined by C1 and C2. This circuit is not suitable for low level signals because the signal-to-noise ratio is only approx. 50 dB with 5 V p-p output with the values shown.

CURRENT-COLLECTOR HEAD-AMPLIFIER

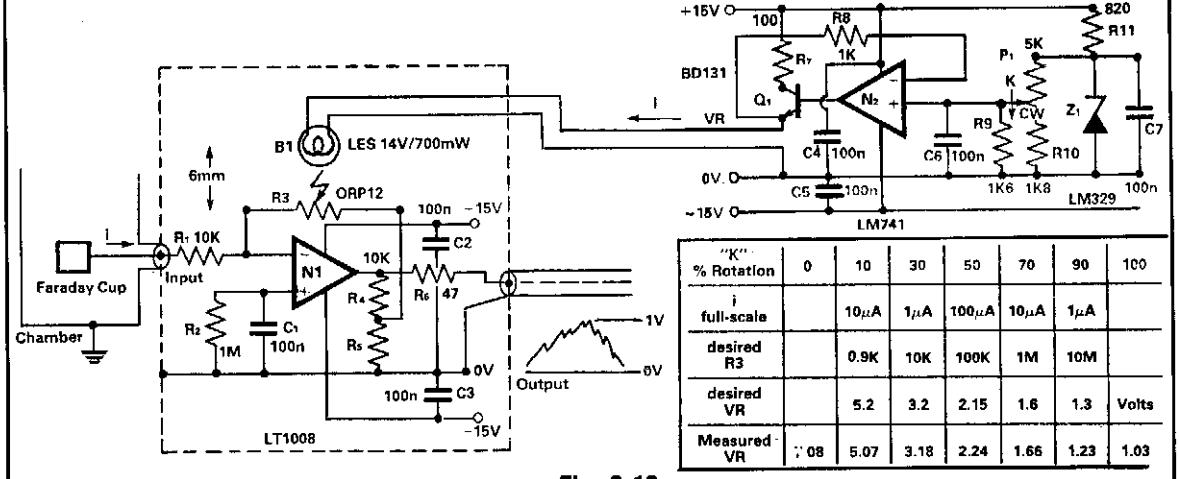

"K" % Rotation	0	10	30	50	70	90	100
i full-scale		10μA	1μA	100μA	10μA	1μA	
desired R3		0.9K	10K	100K	1M	10M	
desired VR		5.2	3.2	2.15	1.6	1.3	Volts
Measured VR	0.08	5.07	3.18	2.24	1.66	1.23	1.03

ELECTRONIC ENGINEERING

Fig. 2-12

Circuit Notes

To amplify small current signals such as from an electron-collector inside a vacuum chamber, it is convenient for reasons of noise and bandwidth to have a "head-amplifier" attached to the chamber. The op-amp N_1 is a precision bipolar device with extremely low bias current and offset voltage (1) as well as low noise, which allows the 100:1 feedback attenuator to be employed. The resistance of R_3 can be varied from above 10 M to below 1 k, and so the nominal 0 to 1 V-peak output signal corresponds to input current ranges of 1 nA to 10 μA.

HI-FI COMPANDER

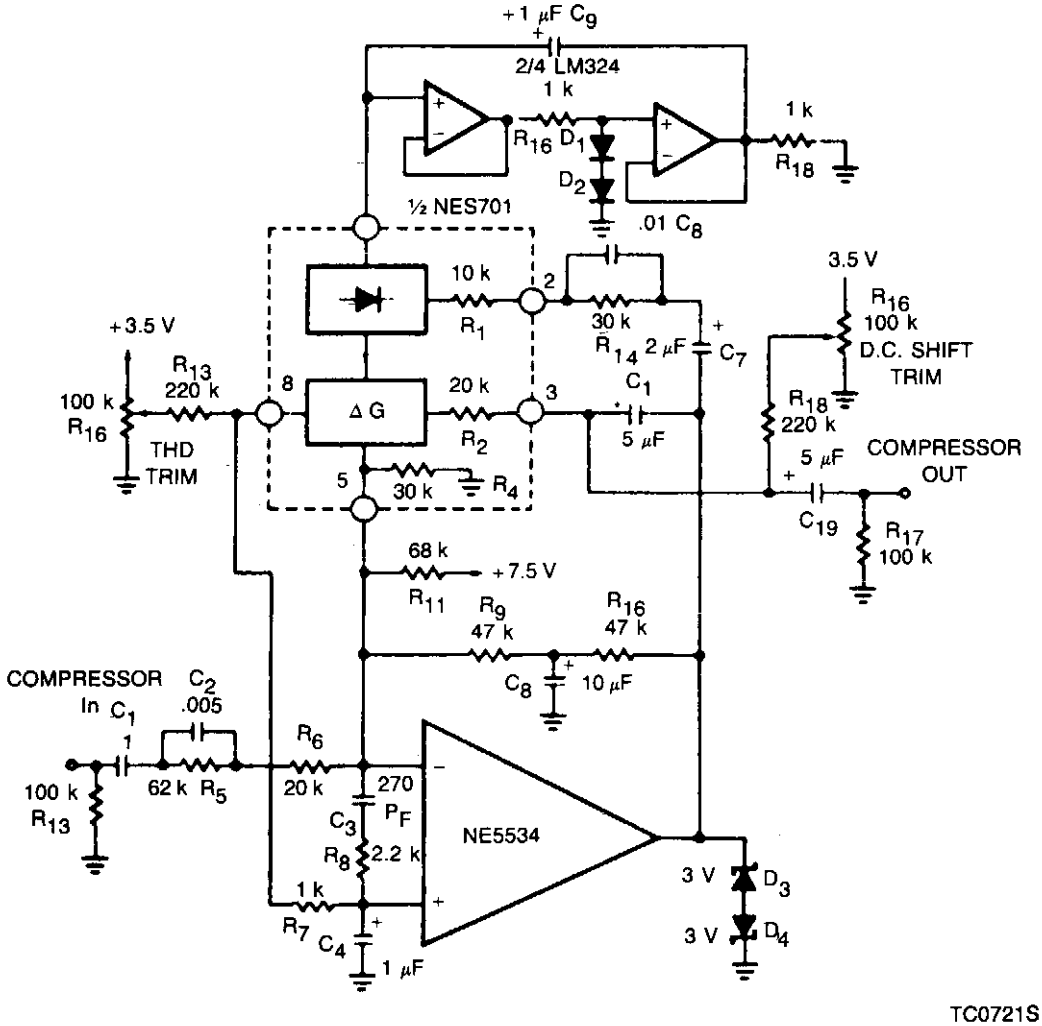

TC0721S

SIGNETICS

HI-FI Compressor With Pre-emphasis

Fig. 2-13(A)

Circuit Notes

This circuit for a high fidelity compressor uses an external op amp, and has a high gain and wide bandwidth. An input compensation network is required for stability. The rectifier capacitor (C_9) is not grounded, but is tied to the output of an op amp circuit. When a compressor is operating at high gain, (small input signal), and is suddenly hit with a signal, it will overload until

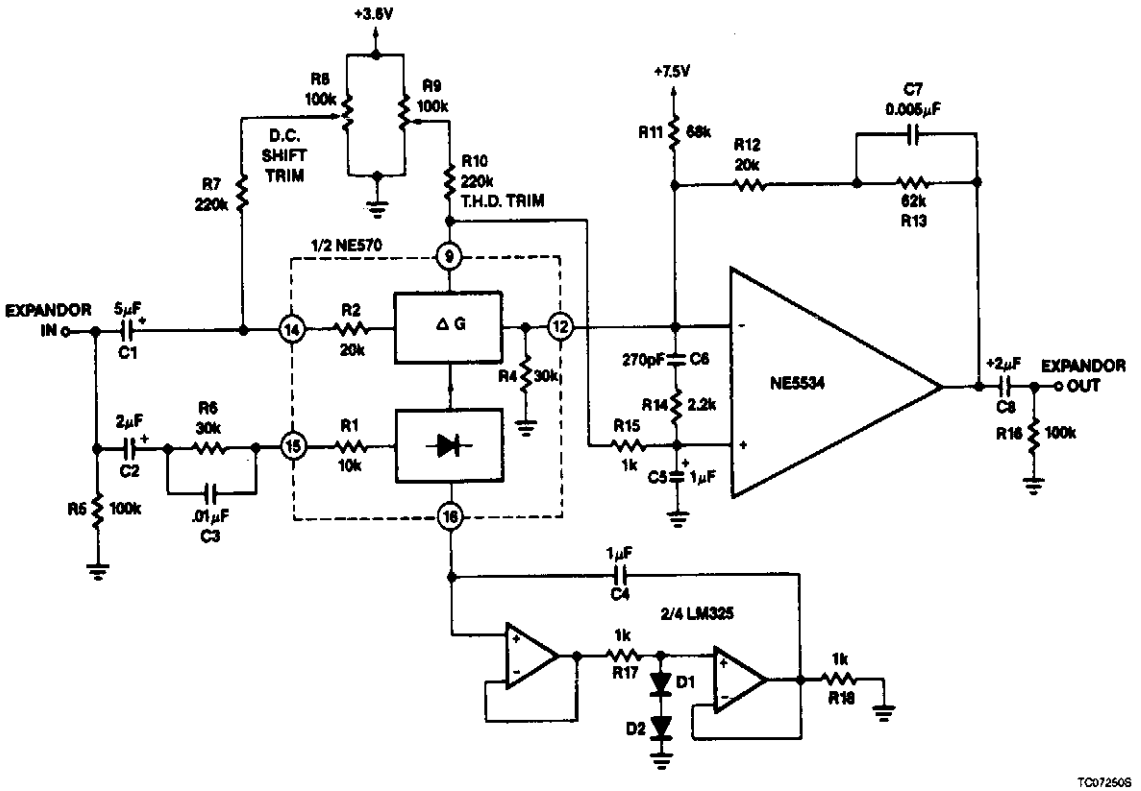

HI-FI Expandor With De-emphasis ***Fig. 2-13(B)***

it can reduce its gain. The time it takes for the compressor to recover from overload is determined by the rectifier capacitor C_9. The expandor to complement the compressor is shown in Fig. 2-13B. Here an external op amp is used for high slew rate. Both the compressor and expandor have unity gain levels of 0 dB. Trim networks are shown for distortion (THD) and dc shift. The distortion trim should be done first, with an input of 0 dB at 10 kHz. The dc shift should be adjusted for minimum envelope bounce with tone bursts.

TWO-WIRE TO FOUR-WIRE AUDIO CONVERTER

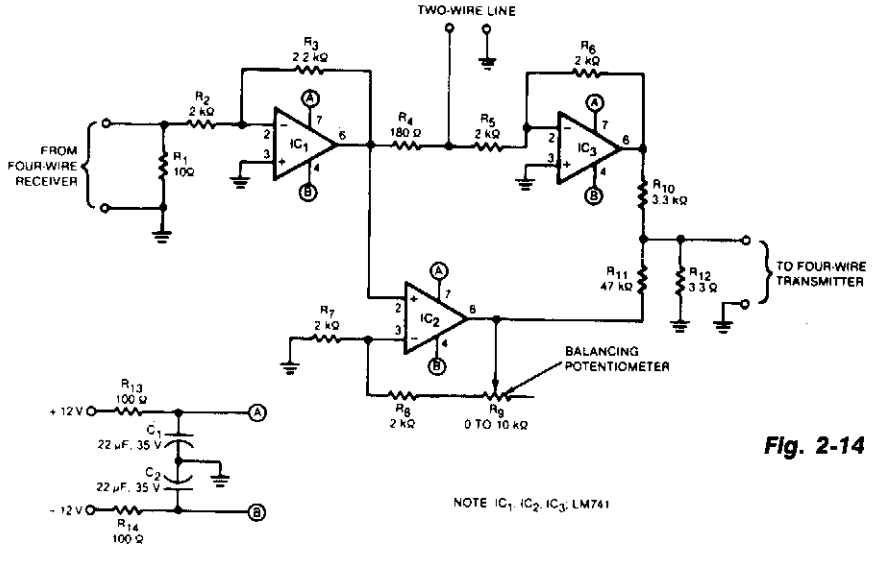

Fig. 2-14

NASA

Circuit Notes

This converter circuit maintains 40 dB of isolation between the input and output halves of a four-wire line while permitting a two-wire line to be connected. A balancing potentiometer, Rg, adjusts the gain of IC2 to null the feed-through from the input to the output. The adjustment is done on the workbench just after assembly by inserting a 1 kHz tone into the four-wire input and setting R_g for minimum output signal. An 82 ohm dummy-load resistor is placed across the two wire terminals.

THERMOCOUPLE AMPLIFIER

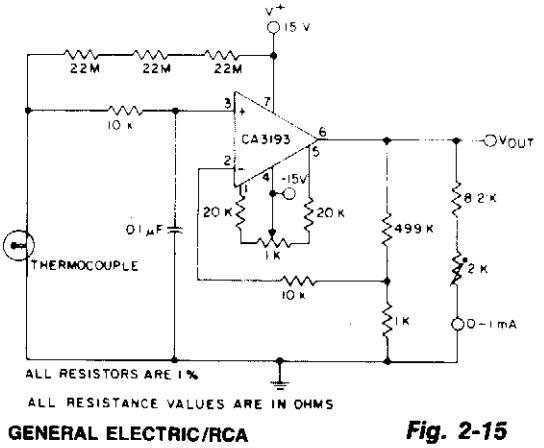

GENERAL ELECTRIC/RCA

Fig. 2-15

Circuit Notes

The circuit uses a CA3193 BiMOS precision op amp to amplify the generated signal 500 times. Three 22-megohm resistors will provide full-scale output if the thermocouple opens.

LOW-DISTORTION AUDIO LIMITER

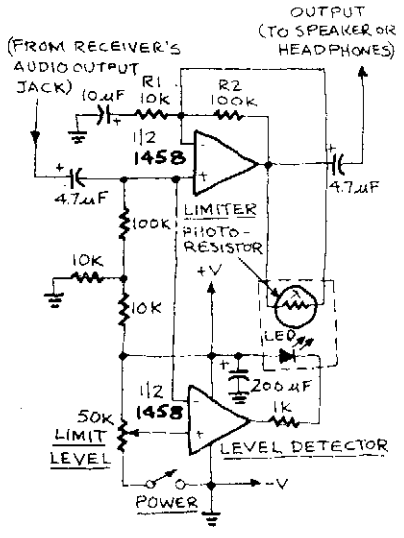

RADIO-ELECTRONICS

Fig. 2-16

Circuit Notes

The level at which the audio limiter comes into action can be set with the LIMIT LEVEL trimmer potentiometer. When that level is exceeded, the output from the LIMITER-DETECTOR half of the op-amp (used as a comparator) turns the LED which causes the resistance of the photoresistor to decrease rapidly. That in turn causes the gain of the LIMITER half of the op-amp to decrease. When the signal drops below the desired limiting level, the LED turns off, the resistance of the photoresistor increases, and the gain of the LIMITER op-amp returns to its normal level—that set by the combination of resistors R1 and R2. A dual-polarity power supply (±12 volts is desirable) is needed for the op-amp.

SPEECH COMPRESSOR

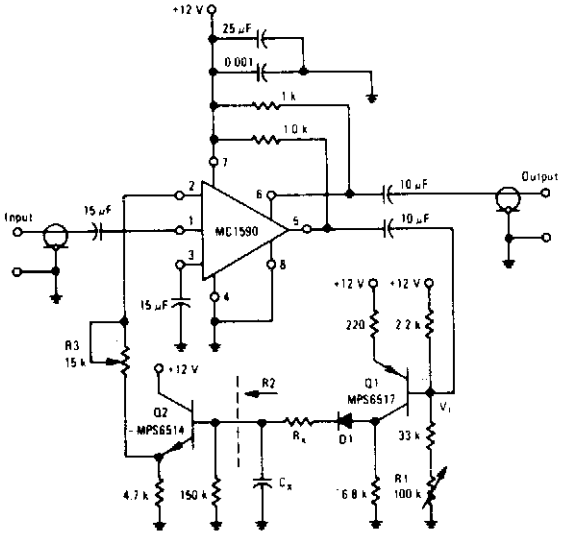

MOTOROLA INC.

Fig. 2-17

Circuit Notes

The amplifier drives the base of a pnp MPS6517 operating common-emitter with a voltage gain of approximately 20. The control R1 varies the quiescent Q point of this transistor so that varying amounts of signal exceed the level V_r. Diode D1 rectifies the positive peaks of Q1's output only when these peaks are greater than $V_r \simeq 7.0$ volts. The resulting output is filtered C_x, R_x. R_x controls the charging time constant or attack time. C_x is involved in both charge and discharge. R2 (150 K, input resistance of the emitter-follower Q2) controls the decay time. Making the decay long and attack short is accomplished by making R_x small and R2 large. (A Darlington emitter-follower may be needed if extremely slow decay times are required.) The emitter-follower Q2 drives the AGC Pin 2 of the MC1590 and reduces the gain. R3 controls the slope of signal compression.

SPEAKER OVERLOAD PROTECTOR

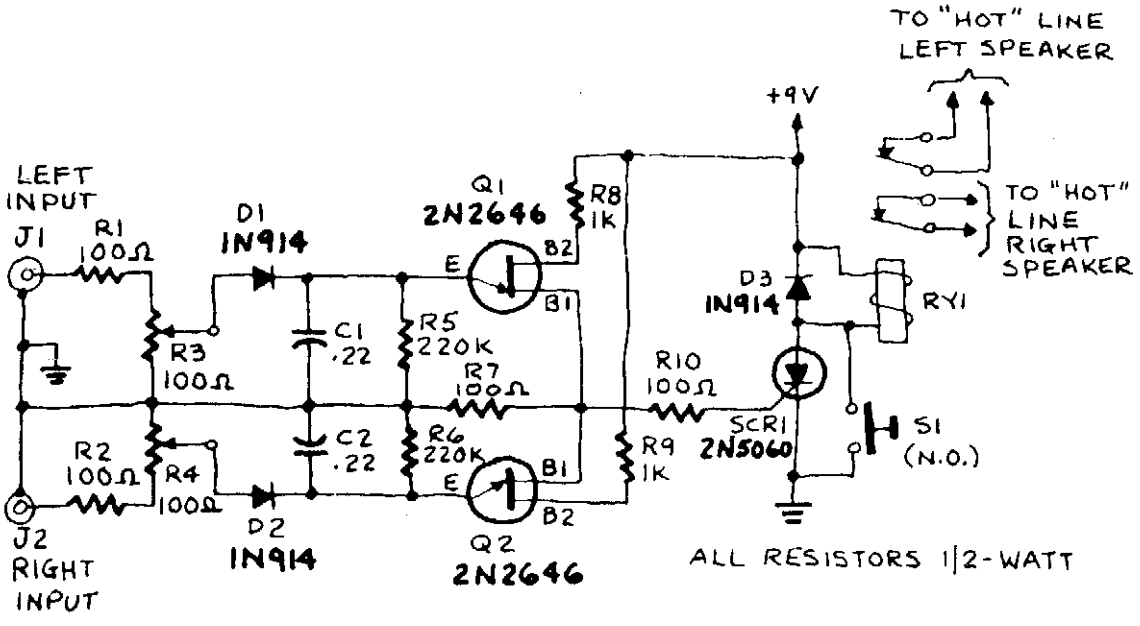

RADIO ELECTRONICS

Fig. 2-18

Circuit Notes

The input to the circuit is taken from the amplifier's speaker-output terminals or jacks. If the right-channel signal is sufficiently large to charge C1 to a potential that is greater than the breakdown voltage of Q1's emitter, a voltage pulse will appear across R7. Similarly, if the left-channel signal is sufficiently large to charge C2 to a potential that is greater than the breakdown voltage of Q2's emitter, a pulse will appear across R7. The pulse across R7 triggers SCR1, a sensitive gate SCR (I_{GT} less than 15 mA where I_{GT} is the gate trigger-current), that latches in a conducting state and energizes RY1. The action of the relay will interrupt both speaker circuits, and the resulting silence should alert you to the problem. Cut back the volume on your amplifier, then press and release S1 to reset the circuit and restore normal operation. The circuit can be adjusted to trip at any level from 15 to 150 watts RMS. To calibrate, deliberately feed an excessive signal to the right input of the speaker protector and adjust R3 until RY1 energizes. Do the same with the left channel, this time adjusting R4. The circuit is now calibrated and ready for use.

AUDIO AUTOMATIC GAIN CONTROL

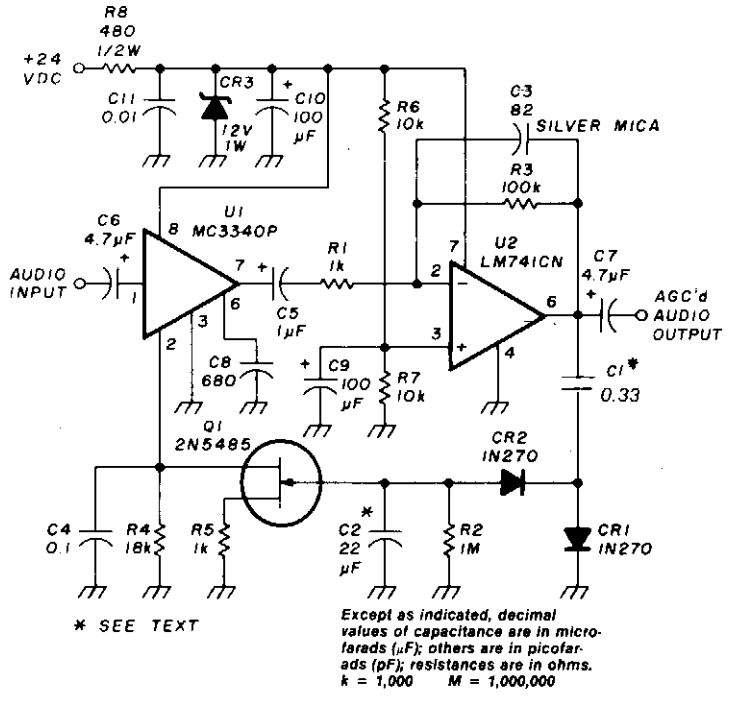

HAM RADIO

Fig. 2-19

Circuit Notes

An audio signal applied to U1 is passed through to the 741 operational amplifier, U2. After being amplified, the output signal of U2 is sampled and applied to a negative voltage doubler/rectifier circuit composed of diodes CR1 and CR2 along with capacitor C1. The resulting negative voltage is used as a control voltage that is applied to the gate of the 2N5485 JFET Q1. Capacitor C2 and resistor R2 form a smoothing filter for the rectified audio control voltage.

The JFET is connected from pin 2 of the MC3340P to ground through a 1 kilohm resistor. As the voltage applied to the gate of the JFET becomes more negative in magnitude, the channel resistance of the JFET increases causing the JFET to operate as a voltage controlled resistor. The MC3340P audio attenuator is the heart of the AGC. It is capable of 13 dB gain or nearly −80 dB of attenuation depending on the external resistance placed between pin 2 and ground. An increase of resistance decreases the gain achieved through the MC3340P. The circuit gain is not entirely a linear function of the external resistance but approximates such behavior over a good portion of the gain/attenuation range. An input signal applied to the AGC input will cause the gate voltage of the JFET to become proportionally negative. As a result the JFET increases the resistance from pin 2 to ground of the MC3340P causing a reduction in gain. In this way the AGC output is held at a nearly constant level.

VOLTAGE-CONTROLLED ATTENUATOR

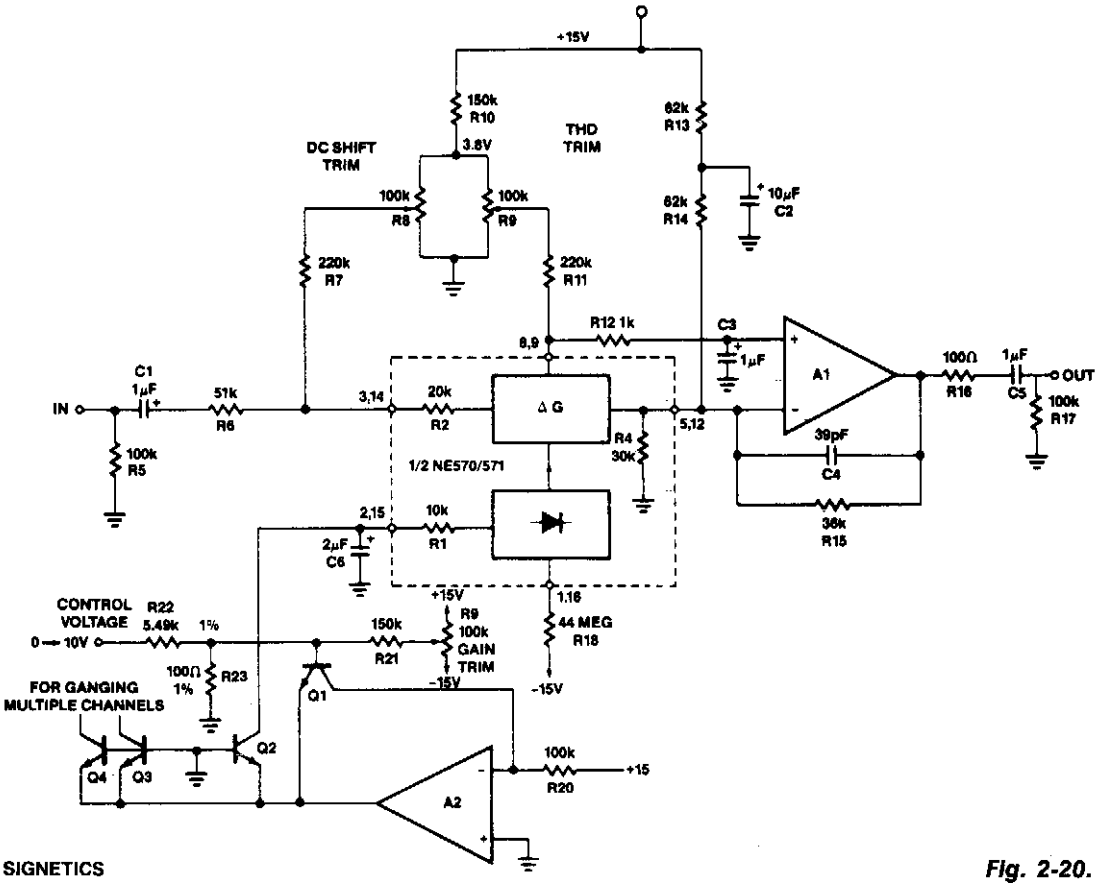

SIGNETICS

Fig. 2-20.

Circuit Notes

Op amp A_2 and transistors Q_1 and Q_2 form the exponential converter generating an exponential gain control current, which is fed into the rectifier. A reference current of 150 µA, (15 V and R_{20} = 100 k), is attenuated a factor of two (6 dB) for every volt increase in the control voltage. Capacitor C_6 slows down gain changes to a 20 ms time constant ($C_6 \times R_1$) so that an abrupt change in the control voltage will produce a smooth sounding gain change. R_{18} ensures that for large control voltages the circuit will go to full attentuation. The rectifier bias current would normally limit the gain reduction to about 70 dB. R_{16} draws excess current out of the rectifier. After approximately 50 dB of attentuation at a −6 dB/V slope, the slope steepens and attenuation becomes much more rapid until the circuit totally shuts off at about 9 V of control voltage. A_1 should be a low-noise high slew rate op amp. R_{13} and R_{14} establish approximately a 0 V bias at A_1's output.

HIGH-INPUT-IMPEDANCE DIFFERENTIAL AMPLIFIER

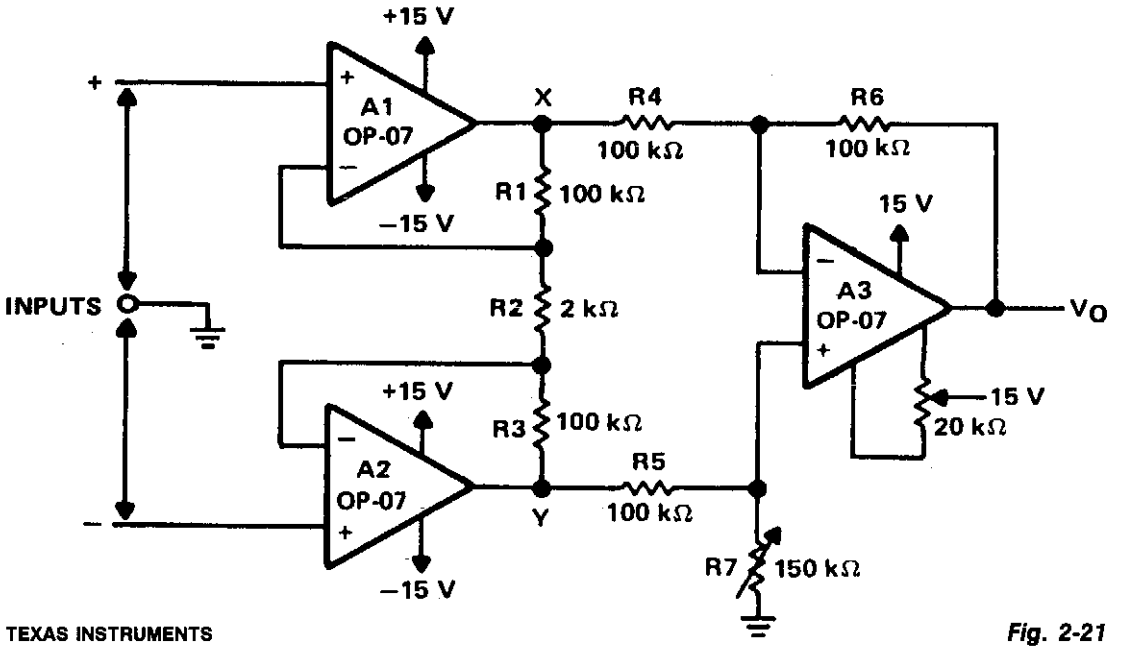

TEXAS INSTRUMENTS

Fig. 2-21

Circuit Notes

Operational amplifiers A1 and A2 are connected in a non-inverting configuration with their outputs driving amplifier A3. Operational amplifier A3 could be called a subtractor circuit which converts the differential signal floating between points X and Y into a single-ended output voltage. Although not mandatory, amplifier A3 is usually operated at unity gain and R4, R5, R6, and R7 are all equal.

The common-mode-rejection of amplifier A3 is a function of how closely the ratio R4:R5 matches the ratio R6:R7. For example, when using resistors with 0.1% tolerance, common-mode rejection is greater than 60 dB. Additional improvement can be attained by using a potentiometer (slightly higher in value than R6) for R7. The potentiometer can be adjusted for the best common-mode rejection. Input amplifiers A1 and A2 will have some differential gain but the common-mode input voltages will experience only unity gain. These voltages will not appear as differential signals at the input of amplifier A3 because, when they appear at equal levels on both ends of resistor R2, they are effectively canceled.

This type of low-level differential amplifier finds widespread use in signal processing. It is also useful for dc and low-frequency signals commonly received from a transducer or thermocouple output, which are amplified and transmitted in a single-ended mode. The amplifier is powered by ± 15 V supplies. It is only necessary to null the input offset voltage of the output amplifier A3.

AUDIO Q-MULTIPLIER

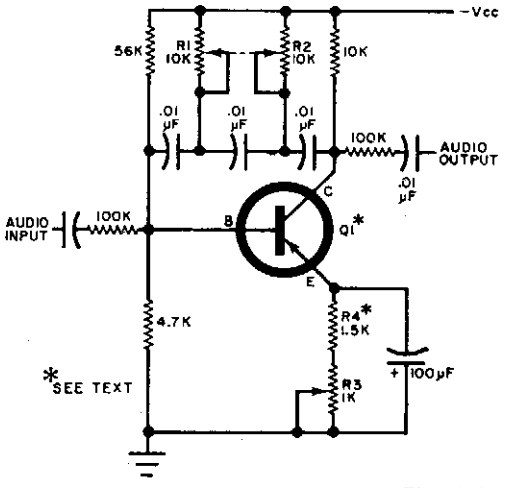

POPULAR ELECTRONICS

Fig. 2-22

Circuit Notes

This circuit is for selective tuning between two closely spaced audio tones. The selective frequency is dependent on the value of capacitors and resistors in the feedback circuit between the collector and base of Q1. With the values shown, the frequency can be "tuned" a hundred cycles or so around 650 Hz. R1 and R2 must be ganged. Emitter potentiometer R3 determines the sharpness of response curve. Any transistor having a beta greater than 50 can be used. Select a value for R4 so that the circuit will not oscillate when R3 is set for minimum bandwidth (sharpest tuning).

AUTOMATIC LEVEL CONTROL

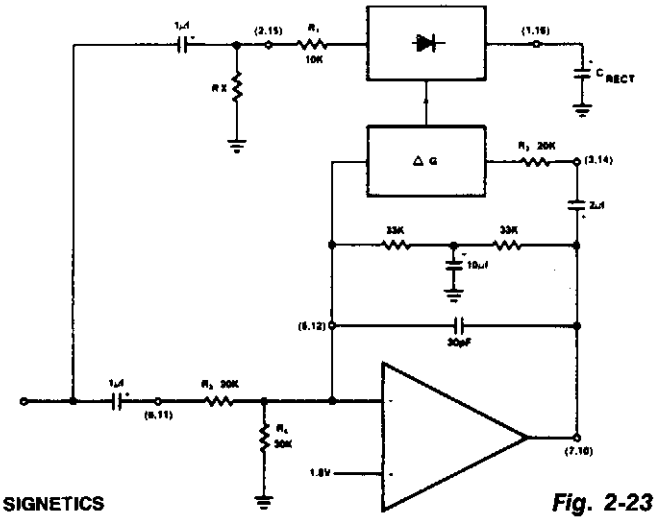

SIGNETICS

Fig. 2-23

Circuit Notes

The NE570 can be used to make a very high performance ALC compressor, except that the rectifier input is tied to the input. This makes gain inversely proportional to input level so that a 20 dB drop in input level will produce a 20 dB increase in gain. The output will remain fixed at a constant level. As shown, the circuit will maintain an output level of ±1 dB for an input range of +14 to −43 dB at 1 kHz. Additional external components will allow the output level to be adjusted.

PULSE-WIDTH PROPORTIONAL-CONTROLLER CIRCUIT

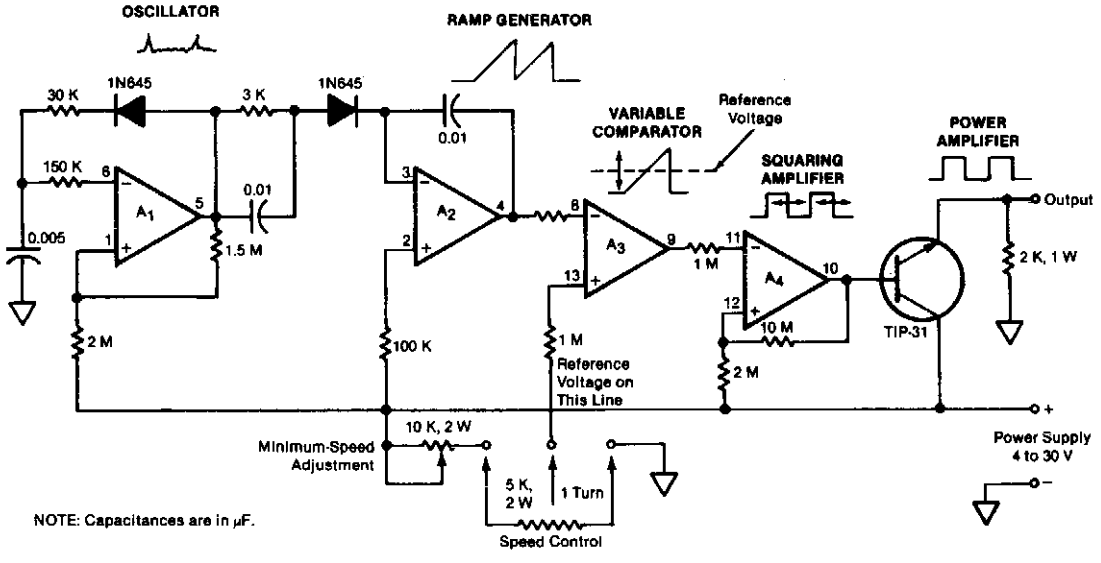

NASA

Fig. 2-24

Circuit Notes

The quad operational amplifier circuit yields full 0 to 100 percent pulse-width control. The controller uses an LM3900 that requires only a single supply voltage of 4 to 30 V. The pulse-repetition rate is set by a 1 kHz oscillator that incorporates amplifier A_1. The oscillator feeds ramp generator A_2, which generates a linear ramp voltage for each oscillator pulse. The ramp signal feeds the inverting input of comparator A_3; the speed-control voltage feeds the noninverting input. Thus, the output of the comparator is a 1 kHz pulse train, the pulse width of which changes linearly with the control voltage. The control voltage can be provided by an adjustable potentiometer or by an external source of feedback information such as a motor-speed sensing circuit. Depending on the control-voltage setting, the pulse duration can be set at any value from zero (for zero average dc voltage applied to the motor) to the full pulse-repetition period (for applied motor voltage equal to dc power-supply voltage). An amplifier stage (A_4) with a gain of 10 acts as a pulse-squaring circuit. A TIP-31 medium-power transistor is driven by A_4 and serves as a separate power-amplifier stage.

OP AMP CLAMPING

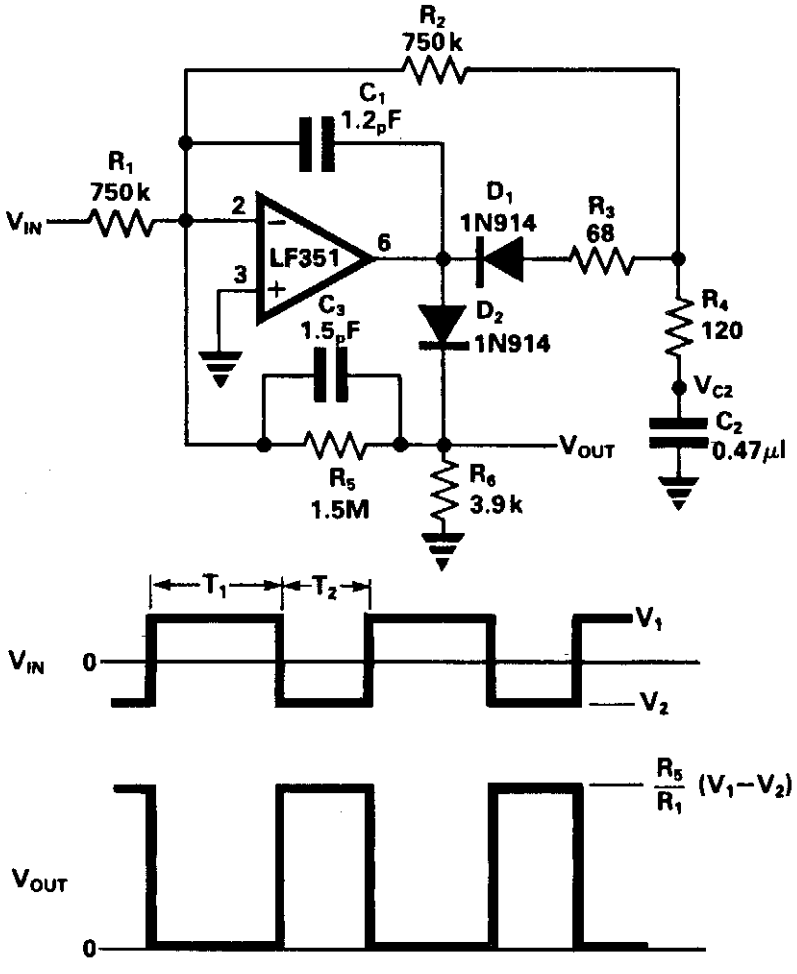

ELECTRONIC ENGINEERING

Fig. 2-25

Circuit Notes

The circuit clamps the most positive value of the input pulse signal to the zero base level. Additionally, the circuit inverts and amplifies the input signal by the factor of R_5/R_1. The waveforms are shown in the bottom of Fig. 2-24.

3

Analog-to-Digital Converters

The sources of the following circuits are contained in the Sources section beginning on page 694. The figure number contained in the box of each circuit correlates to the source entry in the Sources section.

Successive Approximation A/D Converters
4 Digit (10,000 Count) A/D Converter
16-Bit A/D Converter
Inexpensive, Fast 10-Bit Serial Output A/D
10-Bit A/D Converter
High Speed 12-Bit A/D Converter
Successive Approximation A/D Converter
Cyclic A/D Converter
Differential Input A/D System

SUCCESSIVE APPROXIMATION A/D CONVERTERS

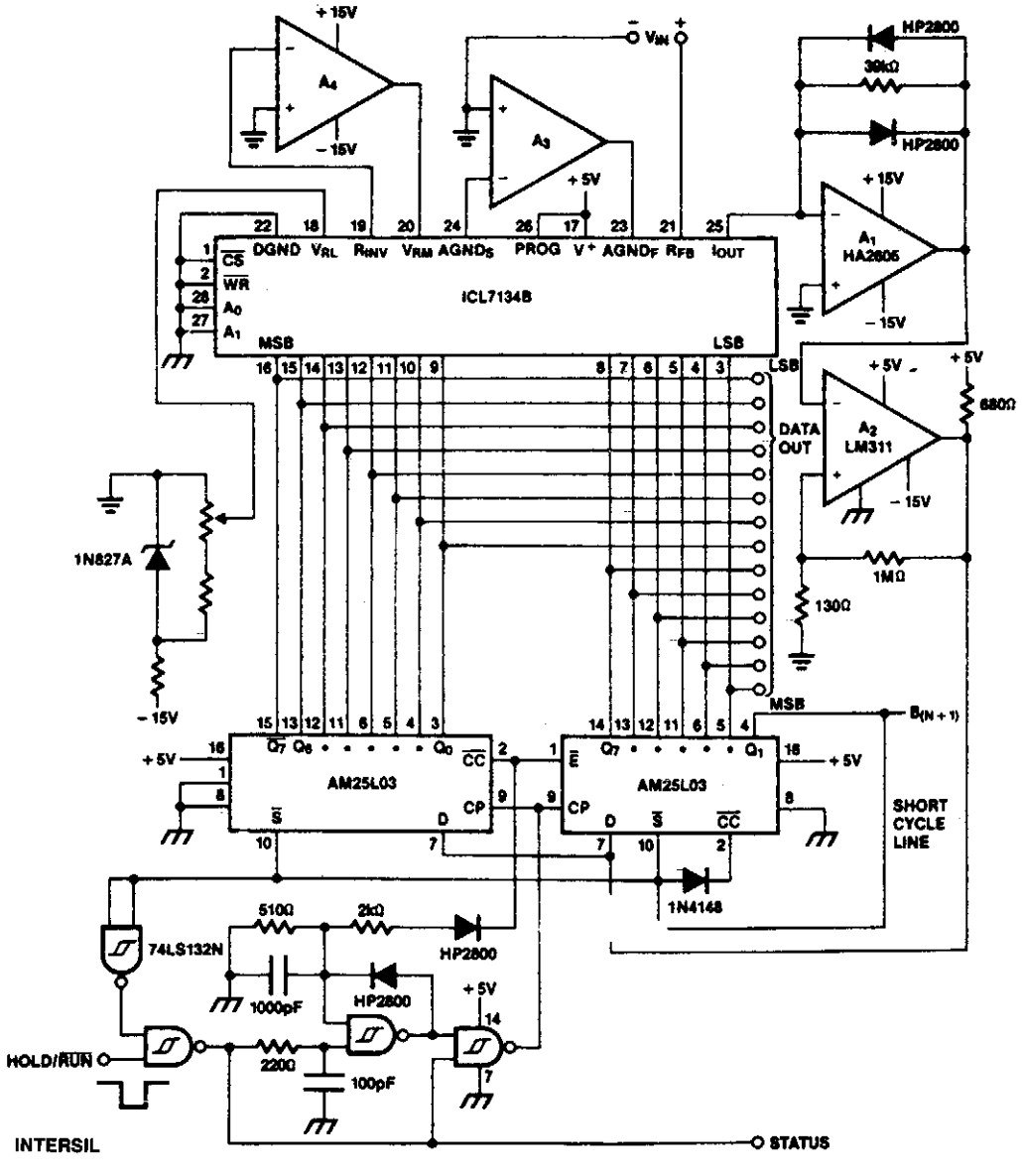

Fig. 3-1

SUCCESSIVE APPROXIMATION A/D CONVERTERS , Continued.

Circuit Notes

The ICL7134B-based circuit is for a bipolar-input high-speed A/D converter, using two AM25L03s to form a 14-bit successive approximation register. The comparator is a two-stage circuit with an HA2605 front-end amplifier, used to reduce settling time problems at the summing node (see A020). Careful offset-nulling of this amplifier is needed, and if wide temperature range operation is desired, an auto-null circuit using an ICL7650 is probably advisable (see A053). The clock, using two Schmitt trigger TTL gates, runs at a slower rate for the first 8 bits, where settling-time is most critical than for the last 6 bits. The short-cycle line is shown tied to the 15th bit; if fewer bits are required, it can be moved up accordingly. The circuit will free-run if the HOLD/RUN input is held low, but will stop after completing a conversion if the pin is high at that time. A low-going pulse will restart it. The STATUS output indicates when the device is operating, and the falling edge indicates the availability of new data. A unipolar version can be constructed by typing the MSB (D13) on an ICL7134U to pin 14 on the first AM25L03, deleting the reference inversion amplifier A4, and tying V_{RFM} to V_{RFL}.

4 DIGIT (10,000 COUNT) A/D CONVERTER

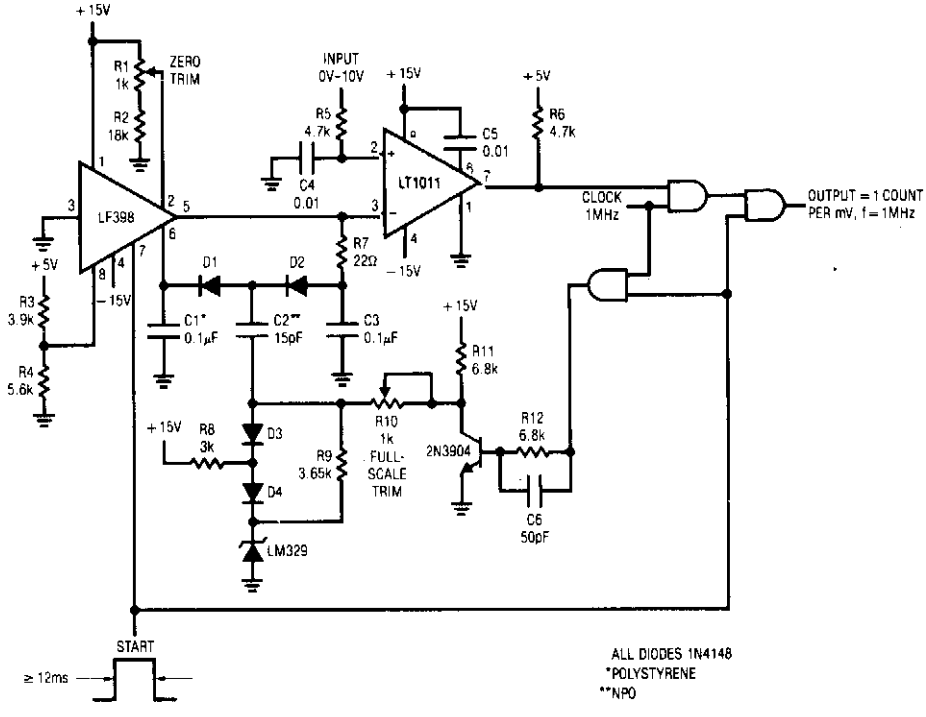

LINEAR TECHNOLOGY CORP.

Fig. 3-2

16-BIT A/D CONVERTER

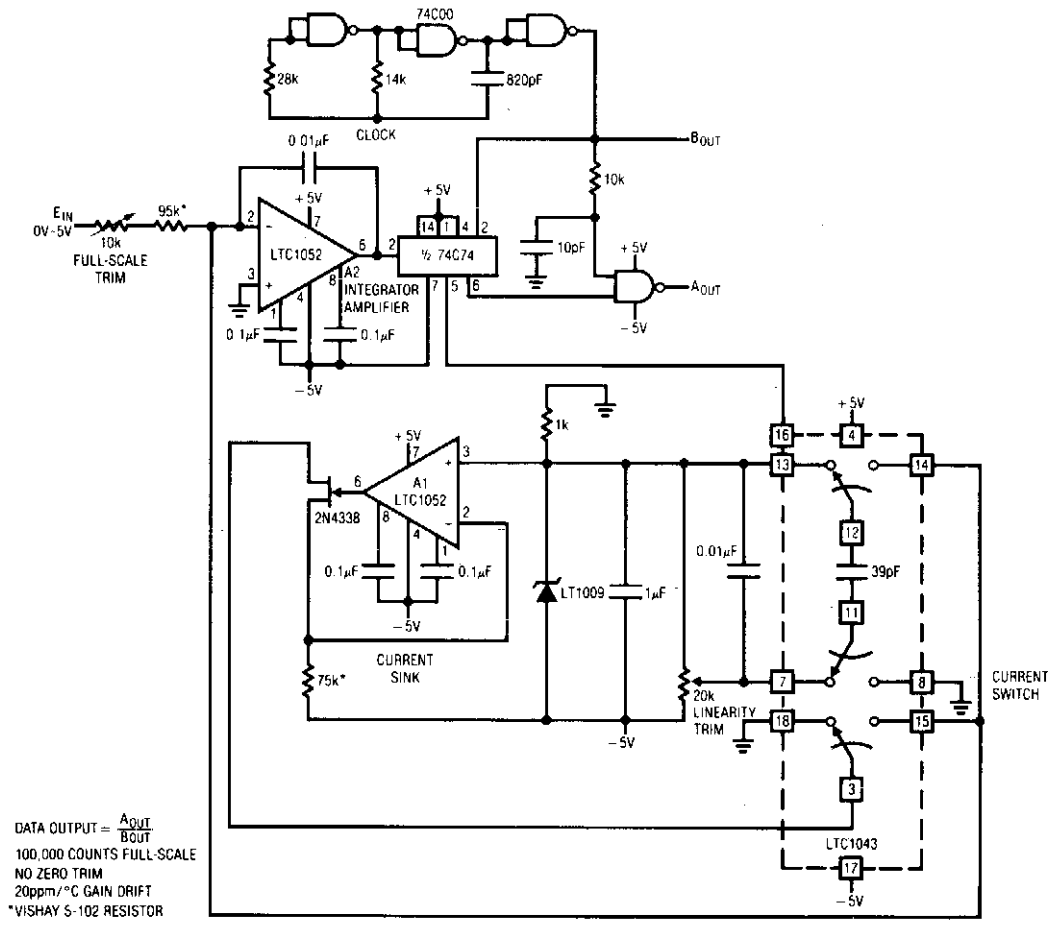

LINEAR TECHNOLOGY

Fig. 3-3

Circuit Notes

The A/D converter, made up of A2, a flip-flop, some gates and a current sink, is based on a current balancing technique. Once again, the chopper-stabilized LTC1052's 50 nV/°C input drift is required to eliminate offset errors in the A/D.

INEXPENSIVE, FAST 10-BIT SERIAL OUTPUT A/D

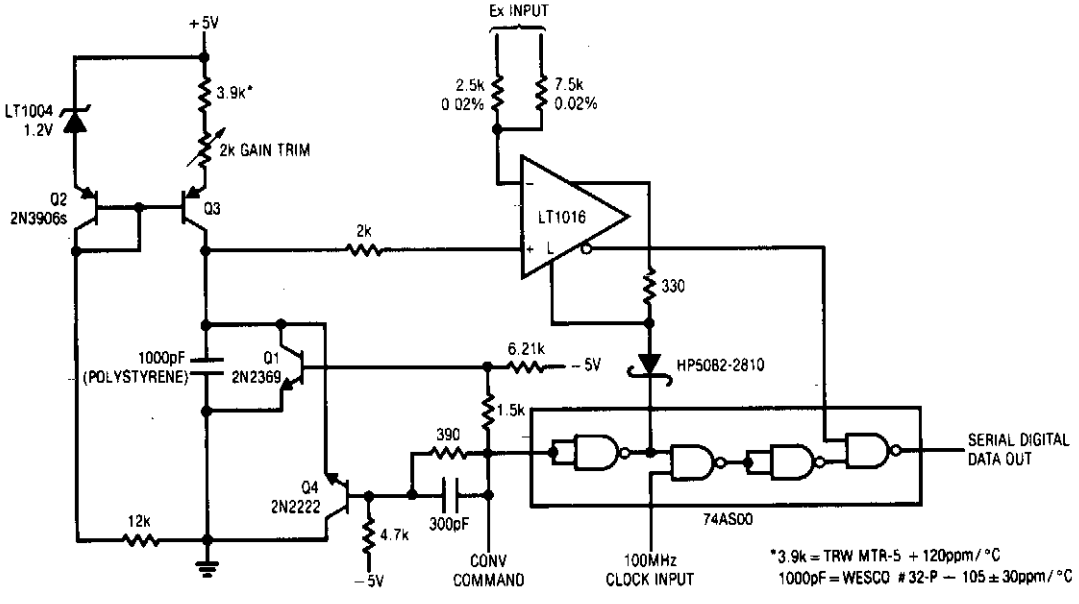

LINEAR TECHNOLOGY CORPORATION

Fig. 3-4

Circuit Notes

Everytime a pulse is applied to the convert command input, Q1 resets the 1000 pF capacitor to 0 V. This resetting action takes 200 ns of the falling edge of the convert command pulse, the capacitor begins to charge linearly. In precisely 10 microseconds, it charges to 2.5 V. The 10 microseconds ramp is applied to the LT1016's positive input. The LT1016 compares the ramp to Ex, the unknown, at its negative input. For a 0 V - 2.5 V range, Ex is applied to the 2.5 k ohm resistor. From a 0 V - 10 V range, the 2.5 k ohm resistor is grounded and Ex is applied to the 7.5 k ohm resistor. Output of the LT1016 is a pulse whose width is directly dependent on the value of Ex. This pulse width is used to gate a 100 MHz clock. The 100 MHz clock pulse bursts that appear at the output are proportional to Ex. For a 0 V - 10 V input, 1024 pulses appear at full-scale, 512 at 5.00 V, etc.

10-BIT A/D CONVERTER

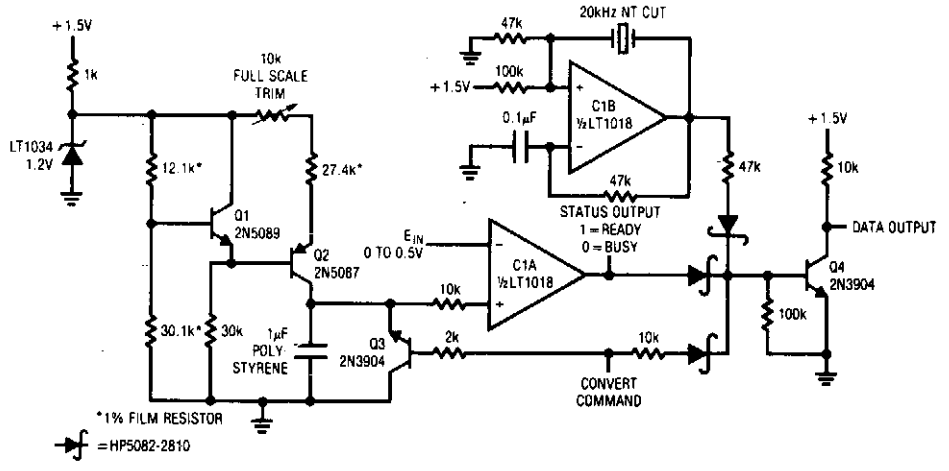

LINEAR TECHNOLOGY CORPORATION

Fig. 3-5

Circuit Notes

The converter has a 60 ms conversion time, consumes 460 μA from its 1.5 V supply and maintains 10 bit accuracy over a 15°C to 35°C temperature range. A pulse applied to the convert command line causes Q3, operating in inverted mode, to discharge through the 10 kΩ diode path, forcing its collector low. Q3's inverted mode switching results in a capacitor discharge within 1 mV of ground. During the time the ramps' value is below the input voltage, CIA's output is low. This allows pulses from C1B, a quartz stabilized oscillator, to modulate Q4. Output data appears at Q4's collector. When the ramp crosses the input voltages value C1A's output goes high, biasing Q4 and output data ceases. The number of pulses at the output is directly proportional to the input voltage. To calibrate apply 0.5 V to the input and trim the 10 kΩ potentiometer for exactly 1000 pulses out each time the convert command line is pulsed.

HIGH SPEED 12-BIT A/D CONVERTER

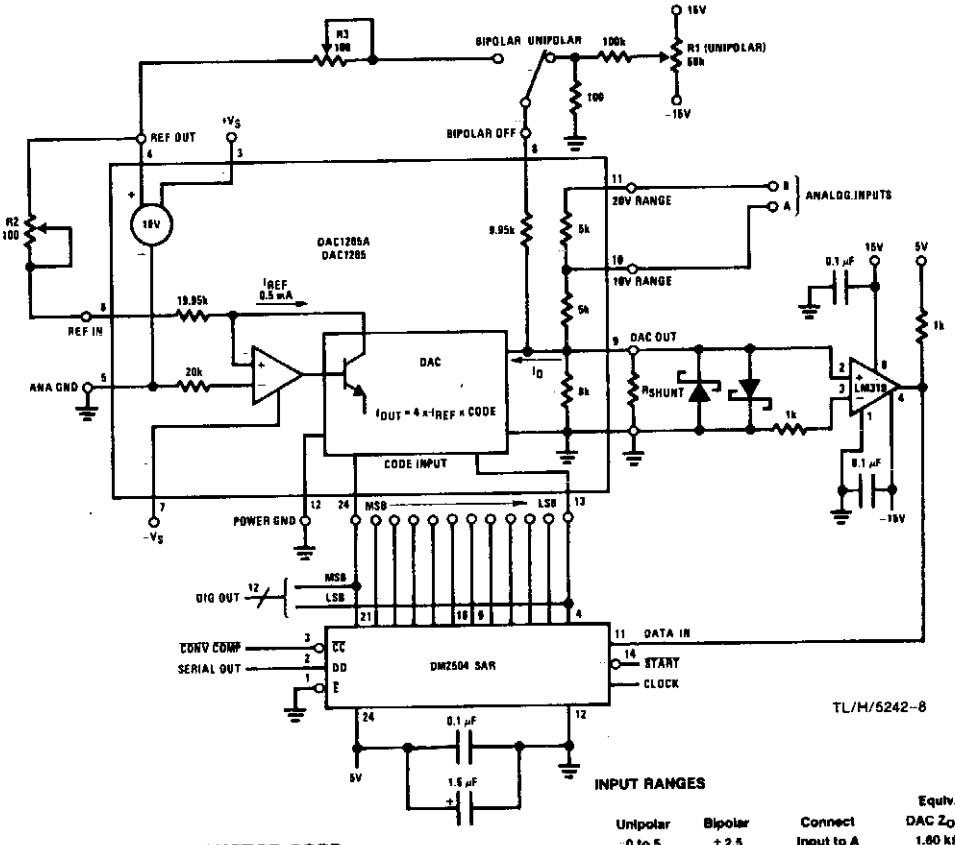

INPUT RANGES

Unipolar	Bipolar	Connect	Equiv. DAC Z_{OUT}
0 to 5	±2.5	Input to A B to DAC OUT	1.60 kΩ
0 to 10	±5	Input to A	2.35 kΩ
0 to 20	±10	Input to B	3.08 kΩ

NATIONAL SEMICONDUCTOR CORP.

Fig. 3-6

Circuit Notes

This system completes a full 12-bit conversion in 10 µs unipolar or bipolar. This converter will be accurate to ± ½ LSB of 12 bits and have a typical gain TC of 10 ppm/°C. In the unipolar mode, the system range is 0 V to 9.9976 V, with each bit having a value of 2.44 mV. For the true conversion accuracy, an A/D converter should be trimmed so that given bit code output results from input levels from ½ LSB below to ½ LSB above the exact voltage which that code represents. Therefore, the converter zero point should be trimmed with an input voltage of 1.22 mV; trim R1 until the LSB just begins to appear in the output code (all other bits "0"). For full-scale, use an input voltage of 9.9963 V (10 V-1 LSB-½ LSB); then trim R2 until the LSB just begins to appear (all other bits "1"). The bipolar signal range is −5.0 V to 4.9976 V. Bipolar offset trimming is done by applying a −4.9988 V input signal and trimming R3 for the LSB transition (all other bits "0"). Full-scale is set by applying 4.9963 V and trimming R2 for the LSB transition (all other bits "1").

SUCCESSIVE APPROXIMATION A/D CONVERTER

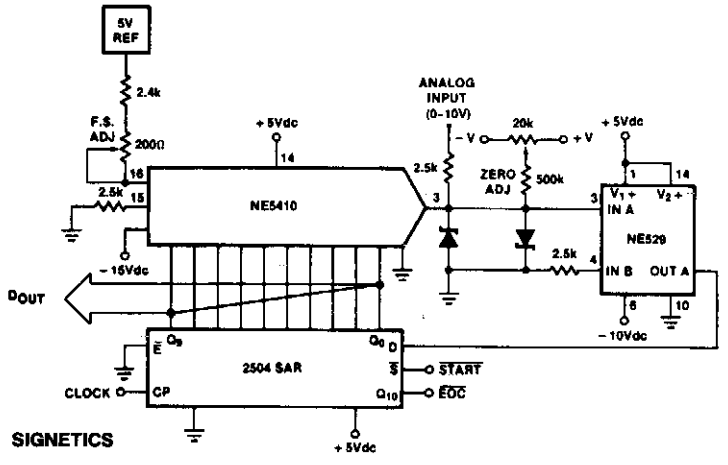

Fig. 3-7

Circuit Notes

The 10-bit conversion time is 3.3 μs with a 3 MHz clock. This converter uses a 2504 12-bit successive approximation register in the short cycle operating mode where the end of conversion signal is taken from the first unused bit of the SAR (Q_{10}).

CYCLIC A/D CONVERTER

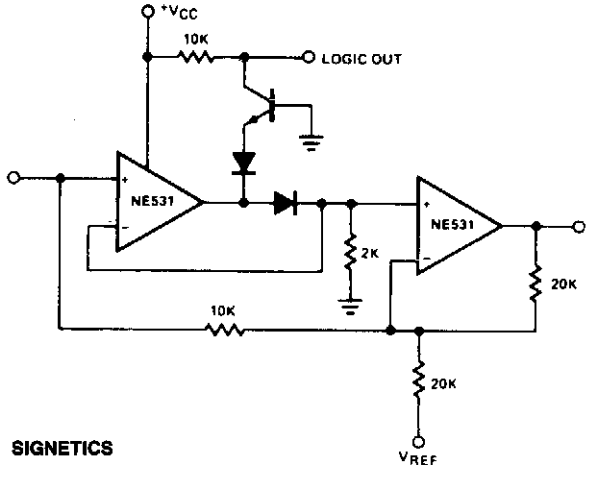

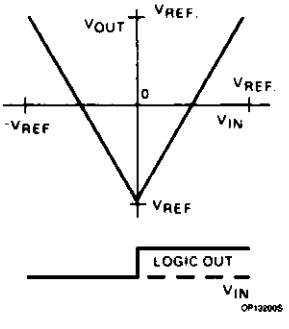

Fig. 3-8

Circuit Notes

The cyclic converter consists of a chain of identical stages, each of which senses the polarity of the input. The stage then subtracts V_{REF} from the input and doubles the remainder if the polarity was correct. The signal is full-wave rectified and the remainder of $V_{IN} - V_{REF}$ is doubled. A chain of these stages gives the gray code equivalent of the input voltage in digitized form related to the magnitude of V_{REF}. Possessing high potential accuracy, the circuit using NE531 devices settles in 5 μs.

DIFFERENTIAL INPUT A/D SYSTEM

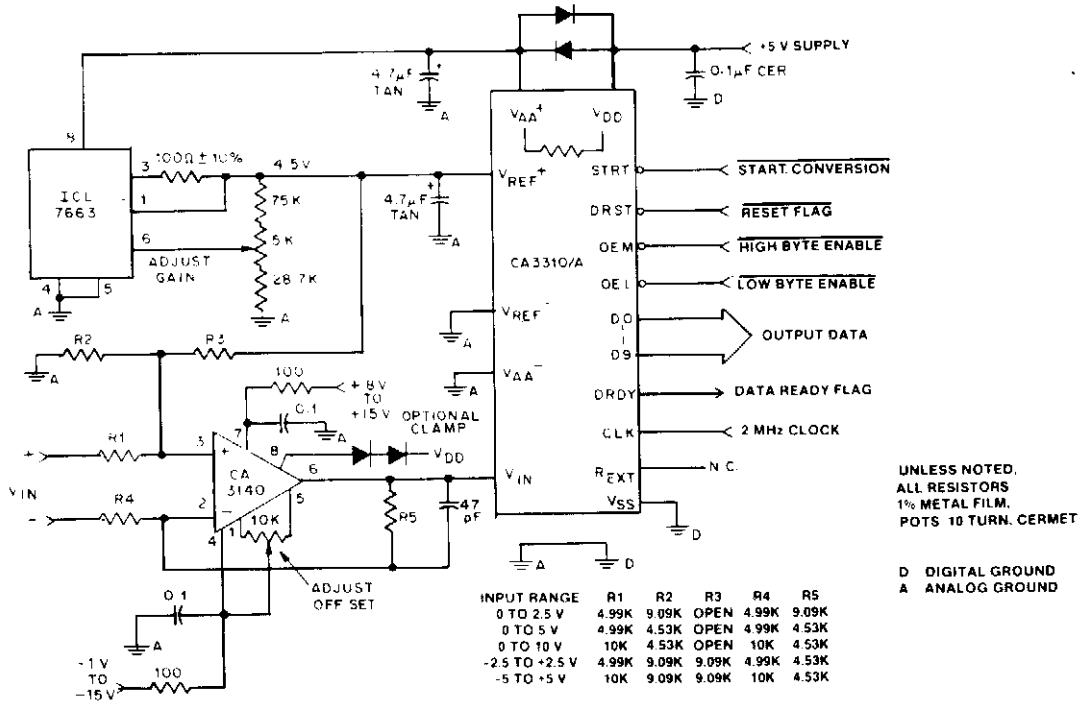

INPUT RANGE	R1	R2	R3	R4	R5
0 TO 2.5 V	4.99K	9.09K	OPEN	4.99K	9.09K
0 TO 5 V	4.99K	4.53K	OPEN	4.99K	4.53K
0 TO 10 V	10K	4.53K	OPEN	10K	4.53K
-2.5 TO +2.5 V	4.99K	9.09K	9.09K	4.99K	4.53K
-5 TO +5 V	10K	9.09K	9.09K	10K	4.53K

GENERAL ELECTRIC/RCA

Fig. 3-9

Circuit Notes

Using a CA3140 BiMOS op amp provides good slewing capability for high bandwidth input signals, and can quickly settle energy that the CA3310 outputs at its V_{IN} terminal. The CA3140 can also drive close to the negative supply rail. If system supply sequencing or an unknown input voltage is likely to cause the op amp to drive above the V_{DD} supply, a diode clamp can be added from pin 8 of the op amp to the V_{DD} supply.

4

Annunciators

The sources of the following circuits are contained in the Sources section beginning on page 694. The figure number contained in the box of each circuit correlates to the source entry in the Sources section.

Low-Cost Chime Circuit
Electronic Bell
Sliding-Tone Doorbell

LOW-COST CHIME CIRCUIT

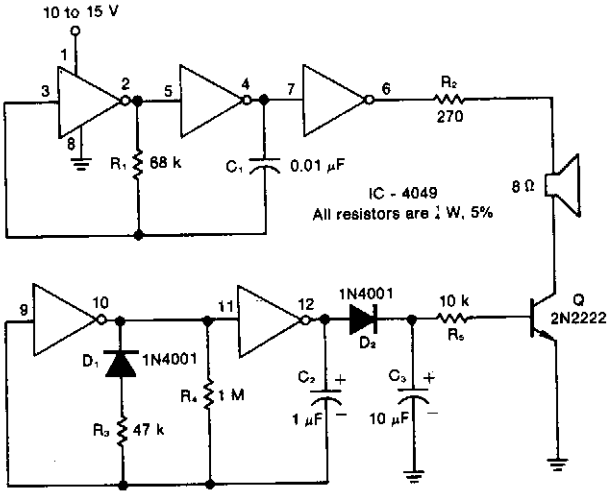

ELECTRONIC DESIGN

Fig. 4-1

Circuit Notes

Resistor R1, capacitor C1, and two inverters form a square wave generator, which produces the basic tone. The generator is followed by an inverter that acts as both a buffer and a driver for the speaker. Resistor R2, which has a minimum value of 100 ohms, limits the current and controls the volume. Diode D1, capacitor C2, resistors R3 and R4, and two inverters create the pulse generator that determines the turn-on and decay times of the chime. The decay circuit—formed by D2, C3, R5, and Q—reduces the amplitude of the chime tone exponentially as a function of time.

ELECTRONIC BELL

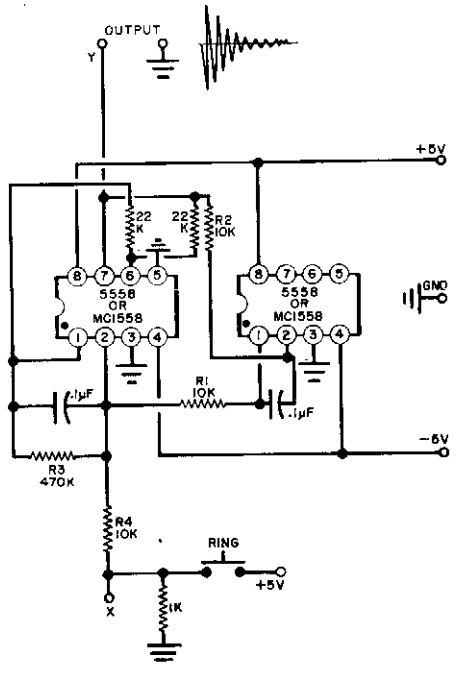

POPULAR ELECTRONICS

Fig. 4-2

Circuit Notes

Coarse frequency is controlled by the capacitors which must be kept nearly identical in value to each other for best results. Fine tuning is accomplished with R1 and R2. The decay time is controlled by R3.

SLIDING-TONE DOORBELL

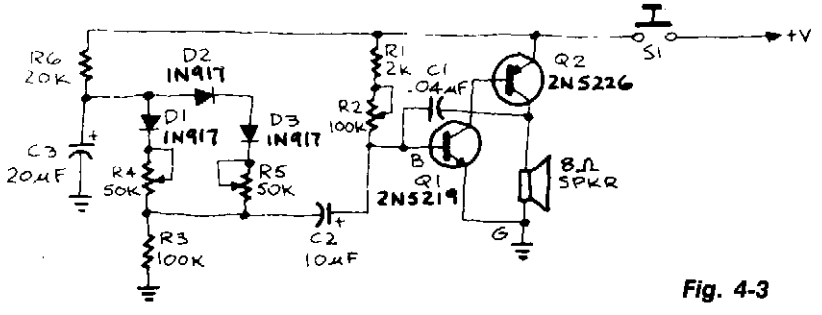

Fig. 4-3

RADIO ELECTRONICS

Circuit Notes

When the doorbell is pushed, you'll hear a low tone that will "slide up" to a higher frequency. The frequency of the AF oscillator is determined by coupling capacitor, C1 and the value of the resistance connected between the base of Q1 and ground. That resistance, R_{BG} is equal to (R1 + R2) R3. First, assume that S1 is closed and R2 has been adjusted to produce a pleasant, low-frequency tone. Capacitor C3 will charge through R6 until it reaches such a voltage that it will cause diode D1 to conduct. When that happens, the value of R_{BG} is paralleled by R4. Thus, because the total resistance R_{BG} decrease, the output tone slides up in frequency. Capacitor C3 will continue to charge until the voltage across D2 and D3 causes those diodes to conduct. Then R_{BG} is paralleled also by R5, the total resistance again decreases, and the oscillator's frequency again increases.

5

Audio Mixers, Crossovers and Distribution Circuits

The sources of the following circuits are contained in the Sources section beginning on page 694. The figure number contained in the box of each circuit correlates to the source entry in the Sources section.

Electronic Crossover Circuit
Sound Mixer Amplifier
Microphone Mixer
Low Distortion Input Selector for Audio Use
Audio Distribution Amplifier
Four Channel Four Track Mixer

ELECTRONIC CROSSOVER CIRCUIT

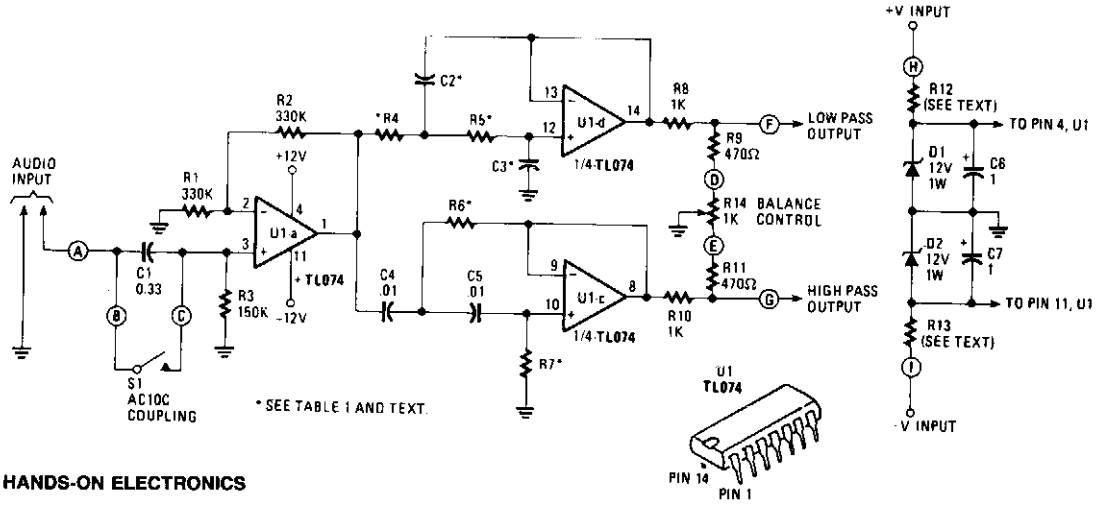

HANDS-ON ELECTRONICS

Fig. 5-1

Circuit Notes

An audio source, such as a mixer, preamplifier, equalizer, or recorder, is fed to the Electronic Crossover Circuit's input. That signal is either ac- or dc-coupled, depending on the setting of switch S1, to the non-inverting input of buffer-amplifier U1a, one section of a quad, BIFET, low-noise TL074 op amp made by Texas Instruments. That stage has a gain of 2, and its output is distributed to both a lowpass filter made by R4, R5, C2, C3, and op-amp U1d, and a highpass filter made by R6, R7, C4, C5, and op amp U1c. Those are 12 dB/octave Butterworth-type filters. The Butterworth filter response was chosen because it gives the best compromise between damping and phase shift. Values of capacitors and resistors will vary with the selected crossover at which your unit will operate. The filter's outputs are fed to a balancing network made by R8, R9, R10, R11 and balance potentiometer R14. When the potentiometer is at its mid-position, there is unity gain for the passbands of both the high and low filters. Dc power for the Electronic Crossover Circuit is regulated by R12, R13, D1, and D2, and decoupled by C6 and C7.

SOUND MIXER/AMPLIFIER

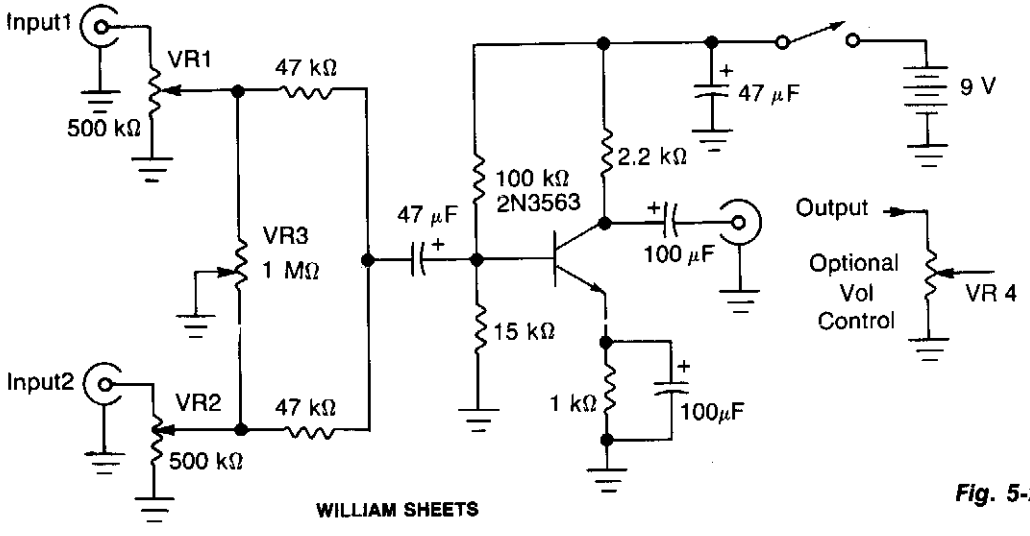

WILLIAM SHEETS

Fig. 5-2

Circuit Notes

Both input signals can be independently controlled by VR1 and VR2. The balance control VR3 is used to fade out one signal while simultaneously fading in the other. The transistor provides gain and the combined output signal level is controlled by VR4 (optional).

MICROPHONE MIXER

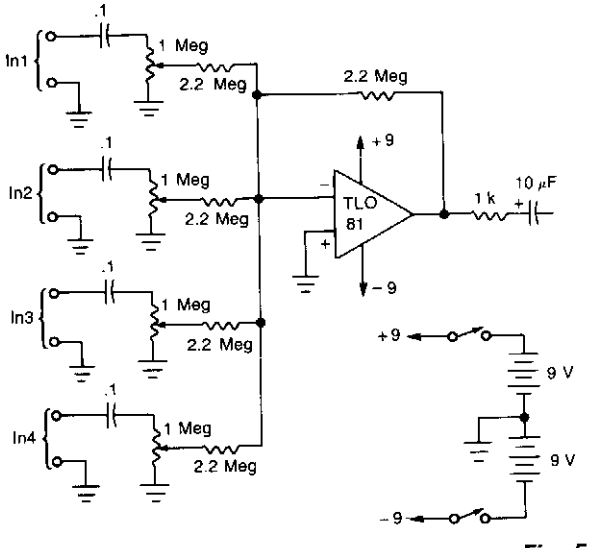

WILLIAM SHEETS

Fig. 5-3

Circuit Notes

A TL081 op amp is used as a high-to-low impedance converter and signal mixer. The input impedance is approximately 1 megohm and the output impedance is about 1 kilohm. Two 9-volt batteries are used as the power source. Battery life should be several hundred hours with alkaline batteries.

LOW DISTORTION INPUT SELECTOR FOR AUDIO USE

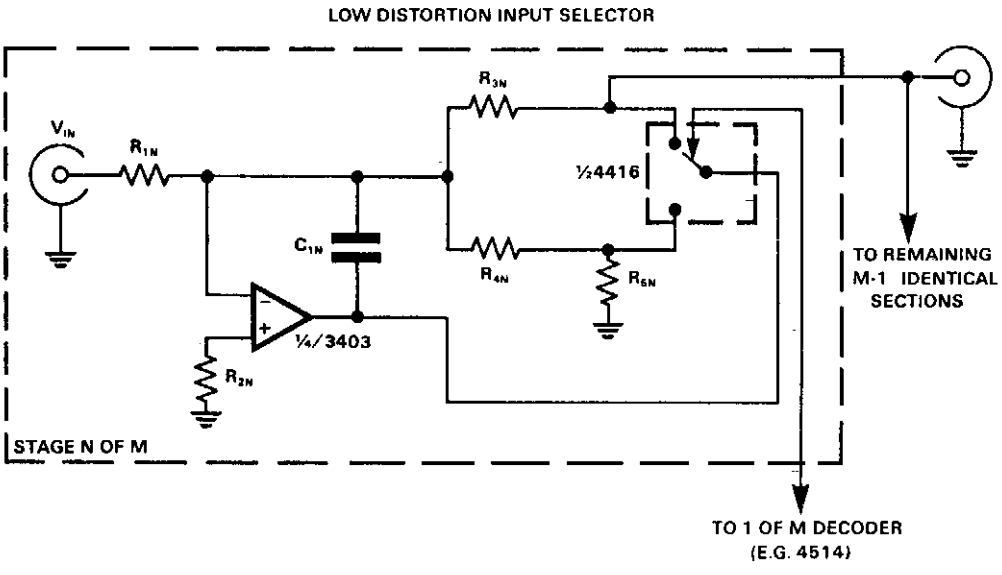

EQUIVALENT CIRCUIT OF EACH STAGE:

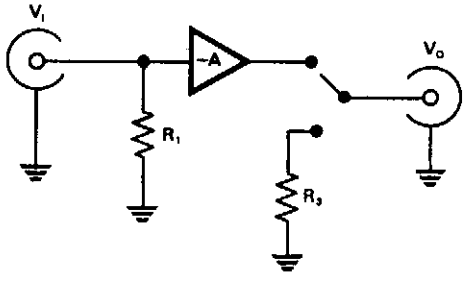

$$R_{3N}=R_{4N}=AR_{1N}$$

$$R_{2N}=(R_{1N}+R_5)//R_{3N}//(R_{4N}+R_{5N})$$

$$\frac{1}{2\pi f_{MAX}} \gg R_{3N}C_{1N} \gg r_s$$

$$R_{5N}=\frac{1}{R_L^{-1}+\sum_{i=1}^{M}(R_{3i})^{-1}}$$

ELECTRONIC ENGINEERING

Fig. 5-4

Circuit Notes

CMOS switches are used directly to select inputs in audio circuits, this can introduce unacceptable levels of distortion, but if the switch is included in the feedback network of an op amp, the distortion due to the switch can be almost eliminated. The circuit uses a 4416 CMOS switch, arranged as two independent SPDT switches. If switching transients are unimportant, R5 and C1 can be omitted, and R4 can be shorted out. However, a feedback path must be maintained, even when a channel is switched out, in order to keep the inverting input of the op amp at ground potential, and prevent excessive crosstalk between channels.

AUDIO DISTRIBUTION AMPLIFIER

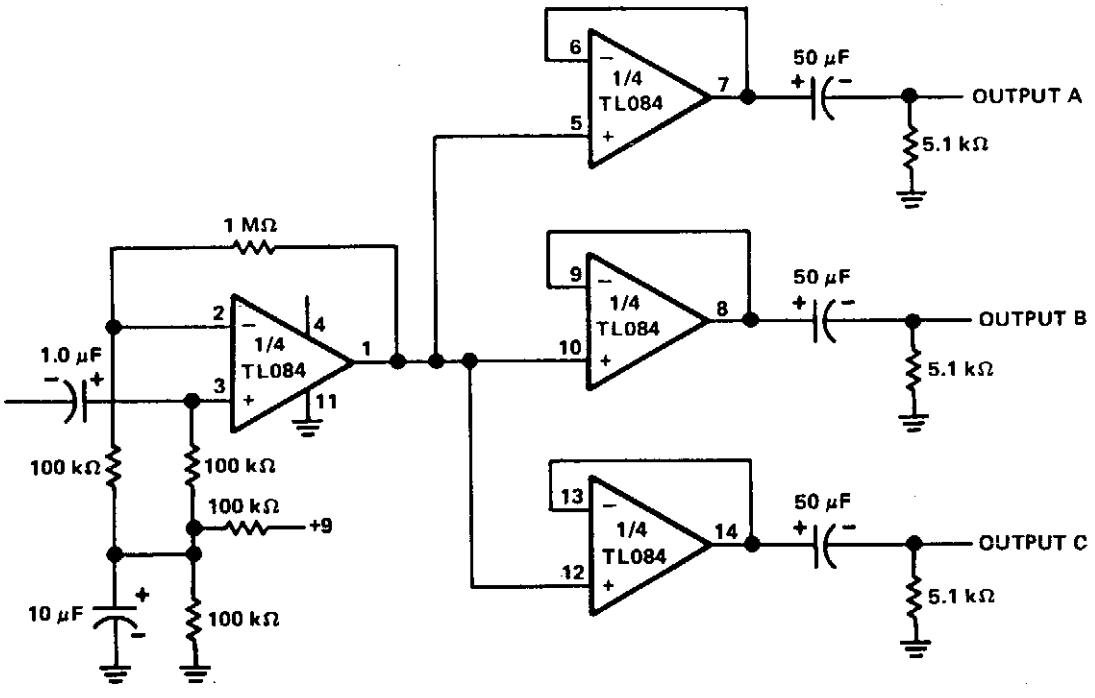

TEXAS INSTRUMENTS

Fig. 5-5

Circuit Notes

The three channel output distribution amplifier uses a single TL084. The first stage is capacitively coupled with a 1.0 μF electrolytic capacitor. The inputs are at ½ V_{CC} rail or 4.5 V. This makes it possible to use a single 9 V supply. A voltage gain of 10 (1 M ohm/100 k ohm) is obtained in the first stage, and the other three stages are connected as unity-gain voltage followers. Each output stage independently drives an amplifier through the 50 μF output capacitor to the 5.1 k ohm load resistor. The response is flat from 10 Hz to 30 kHz.

FOUR CHANNEL FOUR TRACK MIXER

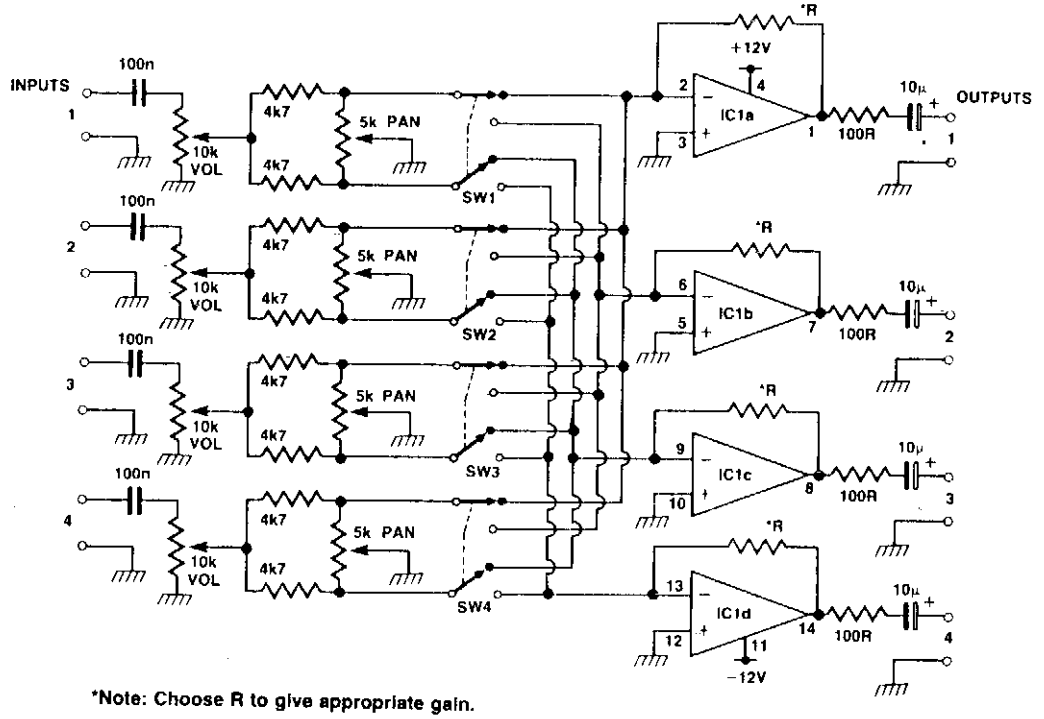

*Note: Choose R to give appropriate gain.

ELECTRONICS TODAY INTERNATIONAL

Fig. 5-6

Circuit Notes

This circuit can be used as a stereo mixer as well as a four track. The quad op-amp IC gives a bit of gain for each track. The pan control allows panning between tracks one and two with the switch in the up position, and with the switch in the down position, it makes possible panning between tracks three and four. Extra channels can be added. A suitable op amp for IC1 is TL074 or similar.

6

Audio Signal Amplifiers

The sources of the following circuits are contained in the Sources section beginning on page 694. The figure number contained in the box of each circuit correlates to the source entry in the Sources section.

Auto Fade
Transistor Headphone Amplifier
Stereo Preamplifier
Audio Compressor
Micropower High-Input-Impedance 20-dB Amplifier
Stereo Preamplifier
Microphone Preamplifier
Volume, Balance, Loudness & Power Amps
Balance and Loudness Amplifier

AUTO FADE

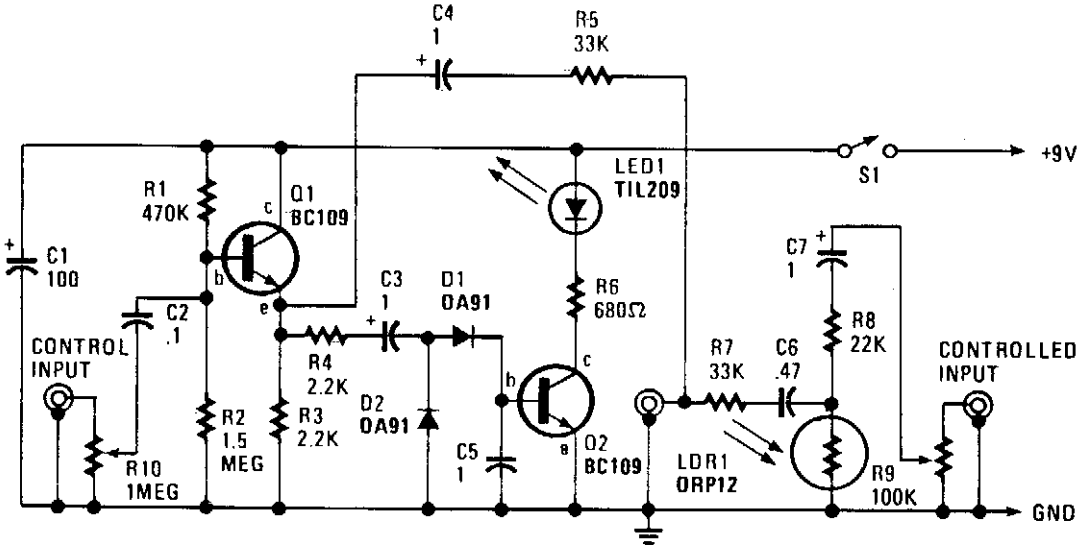

TAB BOOKS INC.

Fig. 6-1

Circuit Notes

The automatic fader drops the level of the background music when the narration comes up. The control input goes through R10, a preset audio level control, to the input of an emitter-follower buffer stage (Q1). The buffer offers a high input impedance and makes sure that the source impedance is low enough to drive the rectifier and smoothing circuit, which consist of D1, D2, and C5. The smoothed output drives a simple LED circuit. R8 and LDR1 form an input attenuator across which the output is fed via C6 and C7 to the output jack. The output at the emitter of Q1 couples to this socket through C4 and R5. R5 and R7 are a passive mixer. With 200 mV or less at the input, there isn't sufficient voltage across C5 to make Q2 turn on. Over 200 mV, Q2 does turn on to a limit, and the LED gets power. That makes the LDR's resistance fall, and signal loss through the attenuator increases. Increase the input to 350 mV rms, and you get a signal reduction of better than 20 dB.

TRANSISTOR HEADPHONE AMPLIFIER

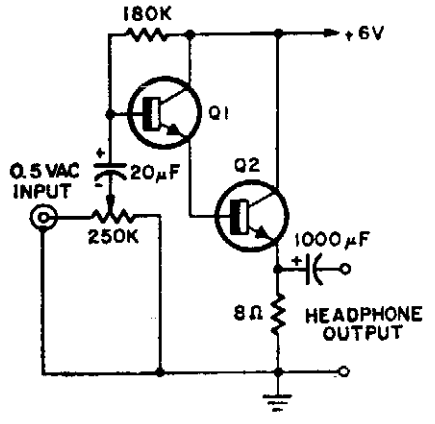

Fig. 6-2

RADIO ELECTRONICS

STEREO PREAMPLIFIER

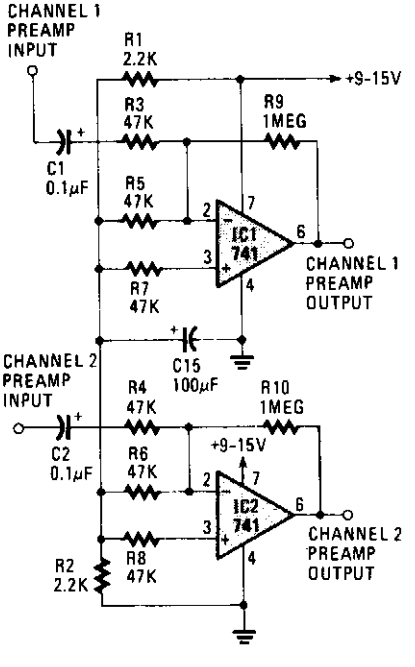

HANDS-ON ELECTRONICS

Circuit Notes

The circuit provides better than 20-dB gain in each channel. A better op-amp type will give a better noise figure and bandpass. In this circuit the roll-off is acute at 20,000 Hertz.

Fig. 6-2

AUDIO COMPRESSOR

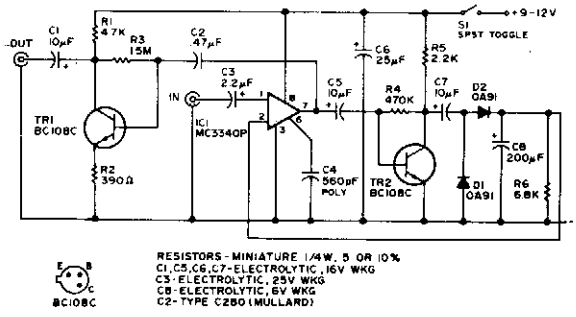

Circuit Notes

A MC3340P is used as a variable gain amplifier. The output of TR2 is rectified and controls the gain of IC1.

73 MAGAZINE

Fig. 6-3

MICROPOWER HIGH-INPUT-IMPEDANCE 20-dB AMPLIFIER

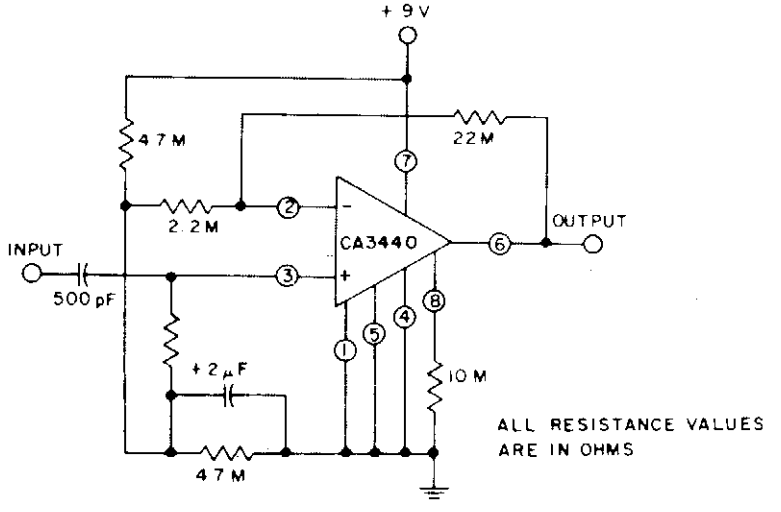

Fig. 6-4

$R_{in} > 20$ M
STAND-BY POWER = 90μW 3 kHz UPPER 3 dB BANDWIDTH
GAIN = 20 db
BW: 20-Hz TO 3-KHz
SR = 0.016 V/μs

GENERAL ELECTRIC/RCA

Circuit Notes

This circuit takes advantage of low power drain, high input impedance, and the excellent frequency capability of the CA3440. Only a 500-pF input coupling capacitor is needed to achieve a 20 Hz, −3 dB low-frequency response.

STEREO PREAMPLIFIER

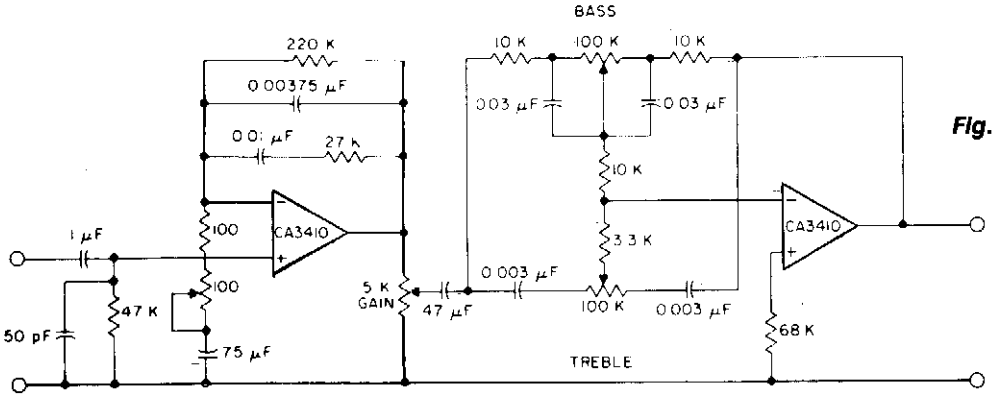

GENERAL ELECTRIC/RCA

Fig. 6-5

Circuit Notes

This circuit has RIAA playback equalization, tone controls, and adequate gain to drive a majority of commercial power amplifiers, using the CA3410 BiMOS op amp. Total harmonic distortion, when driven to provide a 6-V output, is less than 0.035% in the audio-frequency range of 150 Hz to 40 kHz. Complete stereo preamplifier consists of duplicating this circuit using the two remaining CA3410 amplifiers.

MICROPHONE PREAMPLIFIER

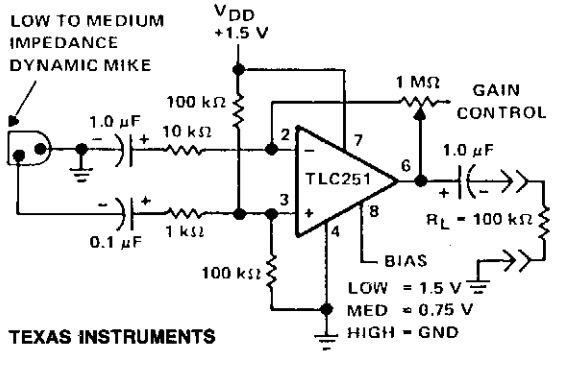

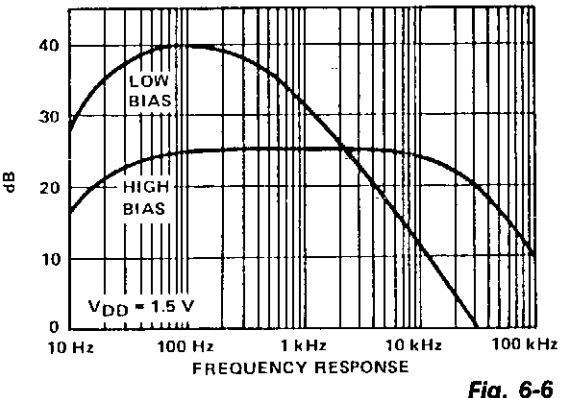

Fig. 6-6

Circuit Notes

A microphone preamplifier using a :om CMOS op amp complete with its own battery, is small enough to be put in a small mike case. The amplifier operates from a 1.5-V mercury cell battery at low supply currents. This preamplifier will operate at very low power levels and maintain a reasonable frequency response as well. The TLC251 operated in the low bias mode (operating at 1.5 V) draws a supply current of only 10 μA and has a −3 dB frequency response of 27 Hz to 4.8 kHz. With pin 8 grounded, which is designated as the high bias condition, the upper limit increases to 25 kHz. Supply current is only 30 μA under those conditions.

VOLUME, BALANCE, LOUDNESS & POWER AMPS

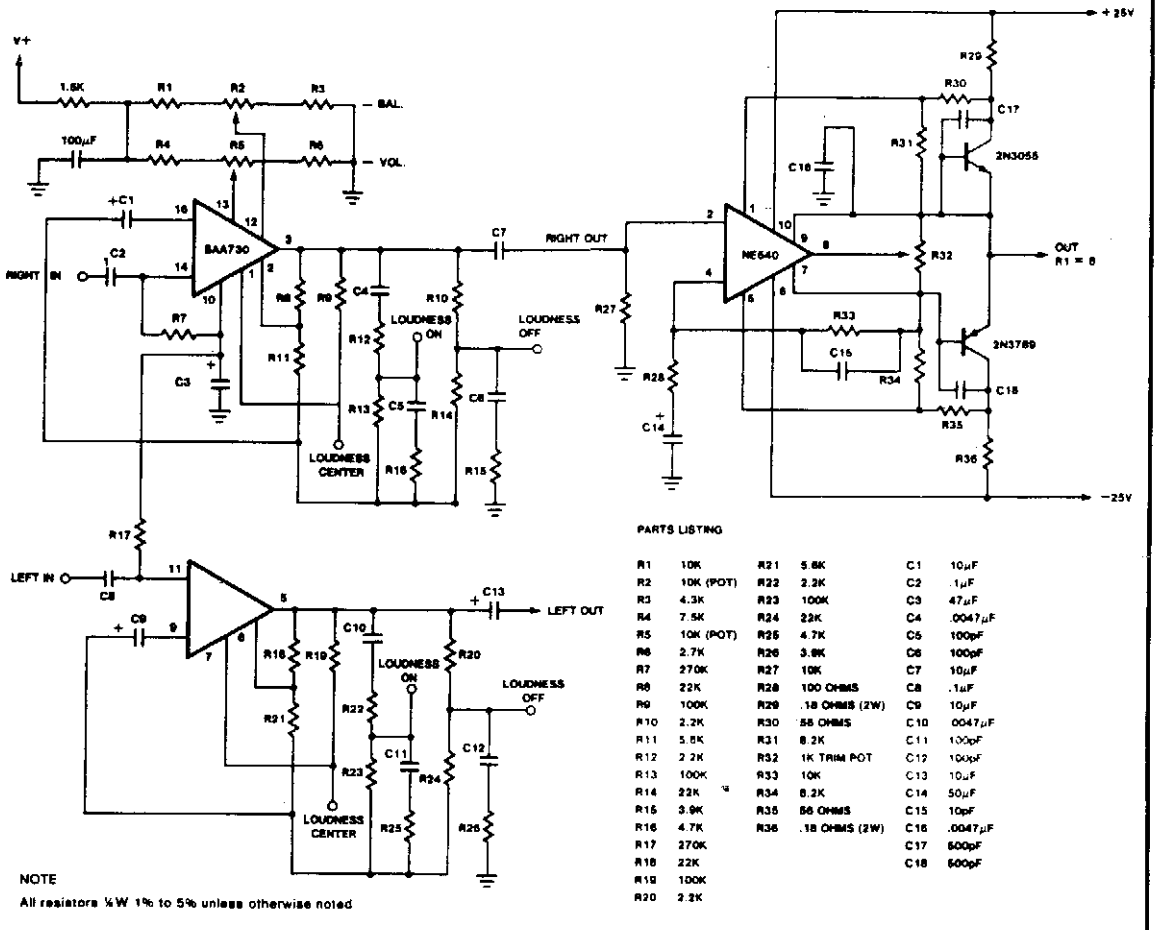

NOTE
All resistors ¼W 1% to 5% unless otherwise noted

PARTS LISTING

R1	10K	R21	5.6K	C1	10μF
R2	10K (POT)	R22	2.2K	C2	.1μF
R3	4.3K	R23	100K	C3	47μF
R4	7.5K	R24	22K	C4	.0047μF
R5	10K (POT)	R25	4.7K	C5	100pF
R6	2.7K	R26	3.9K	C6	100pF
R7	270K	R27	10K	C7	10μF
R8	22K	R28	100 OHMS	C8	.1μF
R9	100K	R29	.18 OHMS (2W)	C9	10μF
R10	2.2K	R30	56 OHMS	C10	.0047μF
R11	5.6K	R31	8.2K	C11	100pF
R12	2.2K	R32	1K TRIM POT	C12	100pF
R13	100K	R33	10K	C13	10μF
R14	22K	R34	8.2K	C14	50μF
R15	3.9K	R35	56 OHMS	C15	10pF
R16	4.7K	R36	.18 OHMS (2W)	C16	.0047μF
R17	270K			C17	500pF
R18	22K			C18	500pF
R19	100K				
R20	2.2K				

SIGNETICS

Fig. 6-7

Circuit Notes

This circuit should prove suitable as a design example for audio sound application.

BALANCE AND LOUDNESS AMPLIFIER

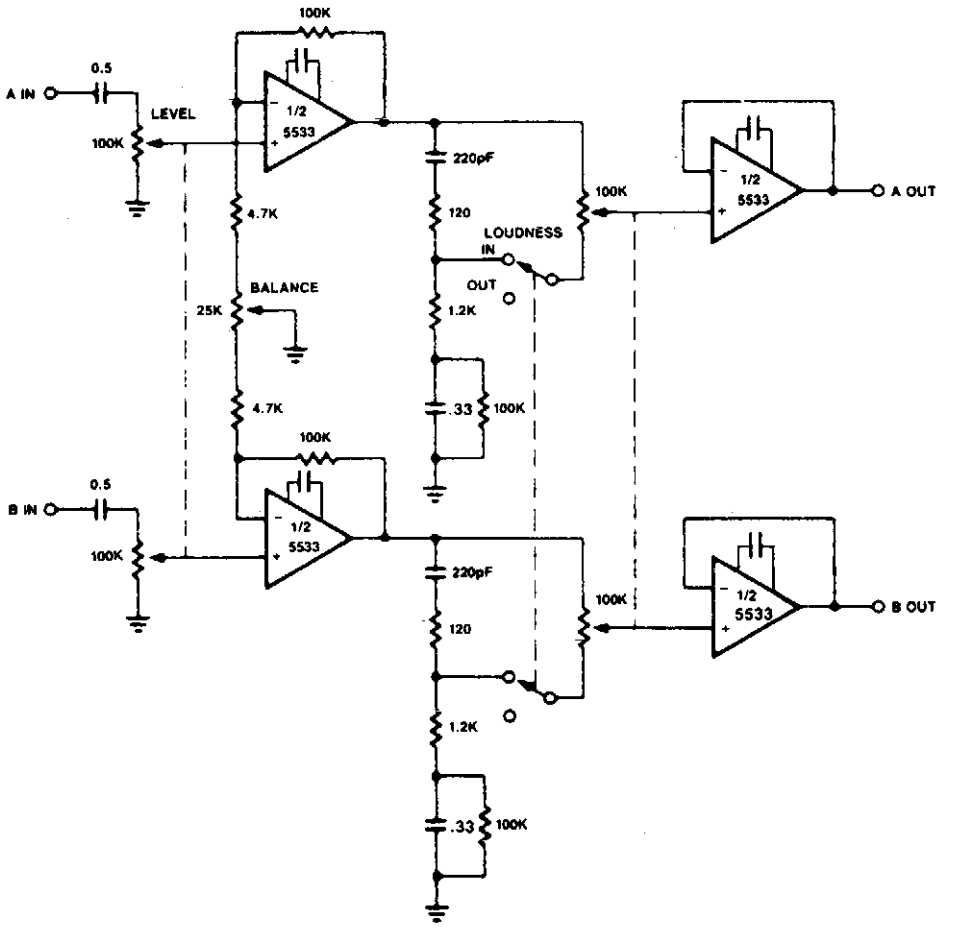

NOTE:
All resistor values are in ohms.

SIGNETICS

Fig. 6-7

Circuit Notes

The circuit shows a combination of balance and loudness controls. Due to the non-linearity of the human hearing system, the low frequencies must be boosted at low listening levels. Balance, level, and loudness controls provide all the listening controls to produce the desired music response.

7

Automotive Circuits

The sources of the following circuits are contained in the Sources section beginning on page 694. The figure number contained in the box of each circuit correlates to the source entry in the Sources section.

Intermittent Windshield Wiper with Dynamic Braking
Immobilizer
Automotive Exhaust Emissions Analyzer
Glow Plug Driver
Garage Stop Light
Bar-Graph Voltmeter
Delayed-Action Windshield Wiper Control
Slow-Sweep Wiper Control
Automotive Lights On Warning
PTC Thermistor Automotive Temperature Indicator
Road Ice Alarm
Headlight Dimmer
Ice Formation Alarm
Delay Circuits for Headlights
Ignition Timing Light
Digi-Tach
Car-Wiper Control
Automatic Headlight Dimmer

INTERMITTENT WINDSHIELD WIPER WITH DYNAMIC BRAKING

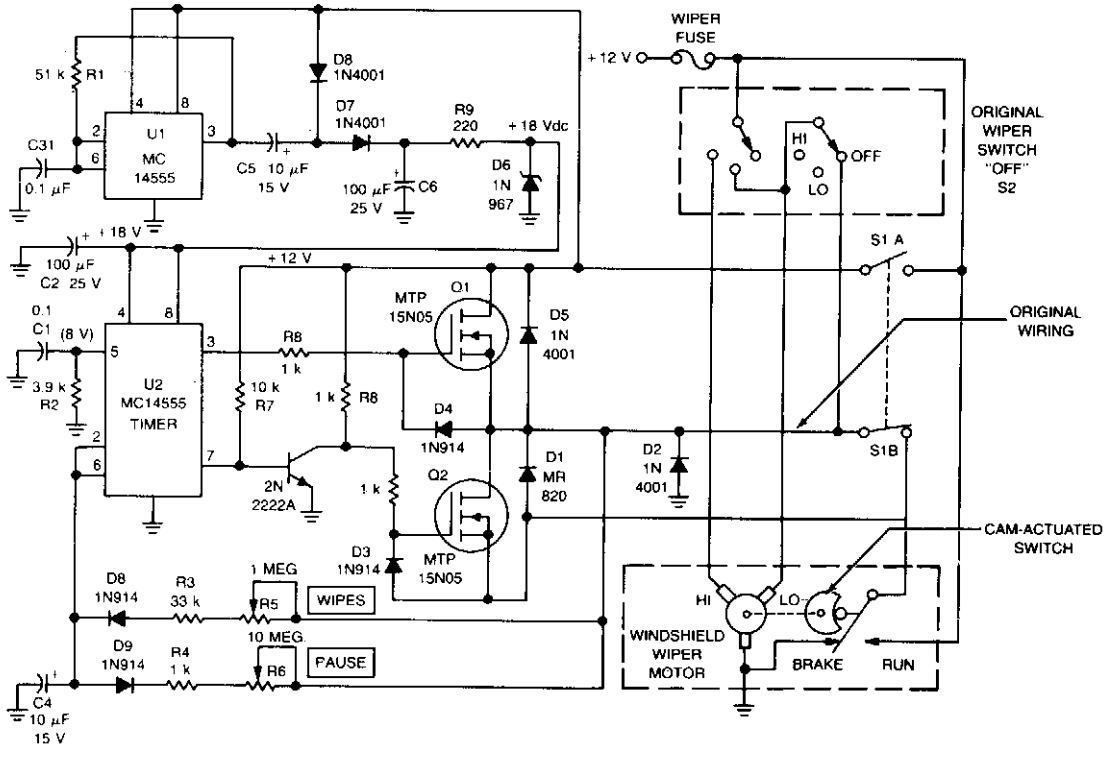

MOTOROLA

Fig. 7-1

Circuit Notes

The circuit provides a delayed windshield wiping, and dynamic braking of wiper blades when they reach the rest position. This prevents the blades from overshooting, which might cause them to stop at a point where they interfere with the drivers' vision.

With the original wiper switch off, switch S1A turns on the delay circuit and S1B disconnects the original automotive wiring. When S1 is turned off, the original wiring controls the system and the delay circuit is bypassed.

Turning S1 on applies the +12-V battery to U1 which is a voltage doubler that produces +18 V. This higher voltage supply is necessary to ensure reliable turn on of Q1 by multivibrator U2. This arrangement provides about +18 V to the gate of Q1, whose source is +12 V minus the V_{DS} drop of Q1.

Q1 remains on for a time determined by the WIPES potentiometer. The interval between wipes is controlled by the PAUSE control. When C1 drops below +4 V, U2 fires, turning Q1 on and restarting the cycle.

IMMOBILIZER

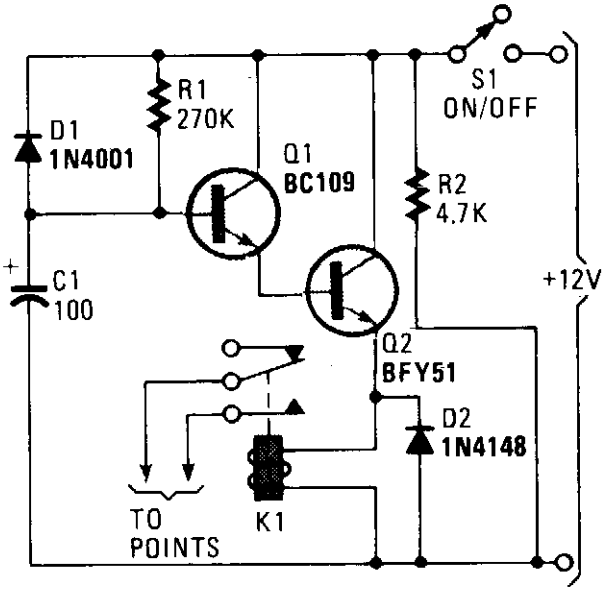

Fig. 7-2

HANDS-ON ELECTRONICS

Circuit Notes

A flip of S1 puts the circuit into action. Power for the circuit is picked up from the ignition switch, and the circuit receives no power until the ignition switch is closed. When power is turned on, capacitor C1 is not charged and the emitter-follower Darlington pair (formed by Q1 and Q2) are cutoff, thus no power is applied to the relay (K1), which serves as Q1's emitter load. The relay's normally-open contacts are connected across the vehicle's points. (At this time, the relay contacts are open and have no effect on the ignition system). C1 charges by way of R1, causing the voltage at the base of Q1 to rise steadily. That creates a similar rise in the voltage at the emitter of Q2. A Darlington pair is used to provide a high input-impedance, buffer stage so that the voltage across C2 is free to rise almost to the full supply potential. Loading effects do not limit the charge potential to just a few volts. Eventually, the voltage applied to the relay becomes sufficient to activate it. The contacts close and short out the points. The ignition system now doesn't act properly and the vehicle is disabled. If the ignition is switched off, power is removed from the circuit and diode D1, which was previously reverse-biased, is now forward biased by the charge on C1. D1 allows C1 to rapidly discharge through R2 (and any other dc paths across the supply lines). The circuit is ready to operate when the ignition is again turned on. The engine will operate, but not for very long. The values of R1 and C1 provides a delay of about 25 to 30 seconds. Increase R1's value to provide a longer delay.

AUTOMOTIVE EXHAUST EMISSIONS ANALYZER

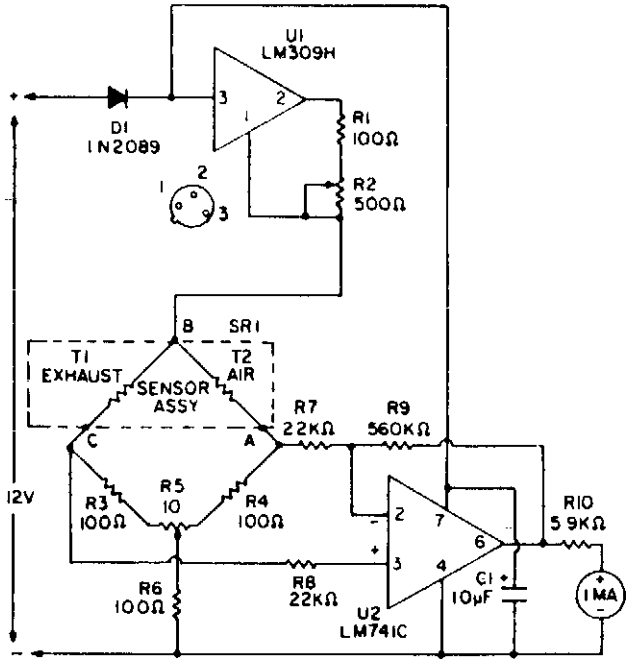

Fig. 7-3

C1—10-uF, 25 volt electrolytic capacitor
D1—Silicon diode, general purpose, 1N2069 or equivalent
M1—0.1 ma ammeter
R1, R3, R4, R6—100-ohm 10% ¼ watt resistor (All resistors are 10%, ¼ watt)
R2—500-ohm potentiometer, PC mount
R5—10-ohm potentiometer, front panel mount
R7, R8—22,000-ohm resistor
R9—570,000-ohm resistor
R10—5,900-ohm resistor
SR1—thermister sensor assembly, part number 100-1648 from Heathkit model CI-1080, Heath Company Benton Harbor, MI, 49022
U1—LM309H 5-volt regulator integrated circuit
U2—LM741TC op amp intergrated circuit

Misc.—PC Board, screws, cabinet, solder, hardware, 10-foot plastic tube, etc.

TAB BOOKS, INC.

Circuit Notes

A bridge circuit contains two 100-ohm resistors (R3 and R4), and two thermistors (T1 and T2). At room temperature the resistance of T1 and T2 is about 2000 ohms. When they are each heated to 150°C by a 10 mA current, the resistance value decreases to 100 ohms. Thus, the four elements comprise a bridge circuit. A characteristic of CO is that it conducts heat away from a thermistor at a different rate than air. One thermistor, T1, is exposed to the automobile exhaust while the other, T2, is isolated in a pure air environment. The difference in thermal conduction unbalances the bridge. A voltage difference is caused between points A and C. A differential amplifier, U1, amplifies this difference and drives the meter with sufficient current to read out the percentage of CO and the air-fuel ratio. A front panel balance control, R5, balances the bridge and calibrates the instrument. Calibration is performed when both thermistors are exposed to the outside air.

GLOW PLUG DRIVER

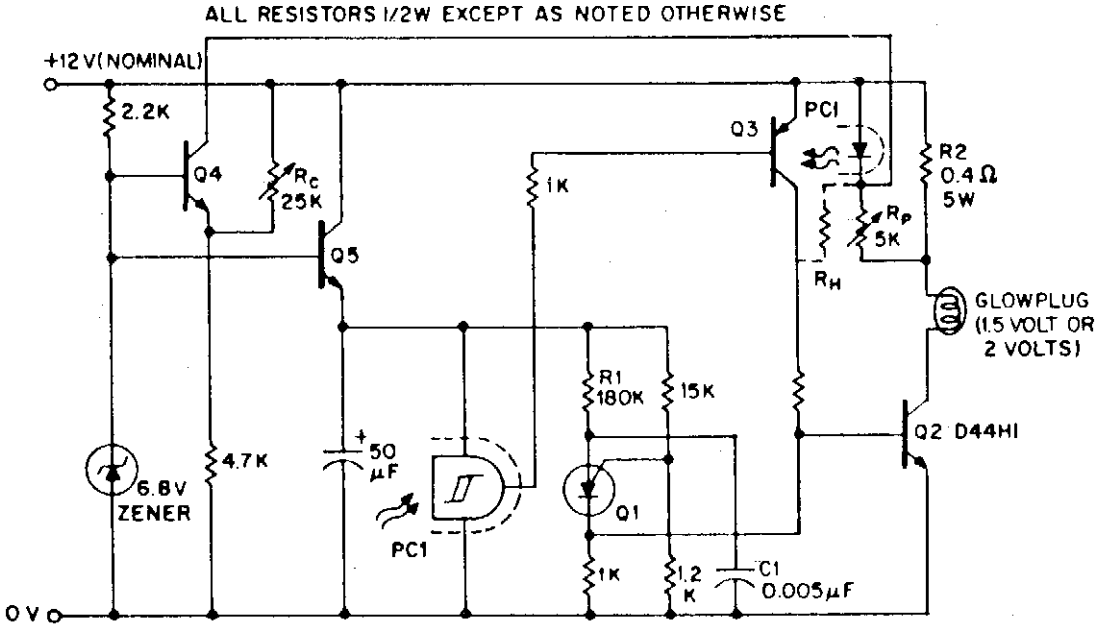

R_C – SUPPLY VOLTAGE COMPENSATION TRIM. PC1 – H11L2.
R_P – PLUG TEMPERATURE ADJUST. Q3 – D29E2
Q1 – 2N6028 Q4, Q5 – D33D1

GENERAL ELECTRIC

Fig. 7-4

Circuit Notes

Model airplanes, boats, and cars use glow plug ignitions for their miniature (0.8cc to 15cc) internal combustion engines. Such engines dispense with the heavy on-board batteries, H.T. coil, and "condenser" required for conventional spark ignition, while simultaneously developing much higher RPM (hence power) than the compression ignition (diesel) motors. The heart of a glow plug is a platinum alloy coil heated to incandescence for engine starting by an external battery, either 1.5 volts or 2 volts. Supplementing this battery, a second 12-volt power supply is frequently required for the engine starter, together with a third 6 volt type for the electrical fuel pump.

Rather than being burdened by all these multiple energy sources, the model builder would prefer to carry (and buy) a single 12-volt battery, deriving the lower voltages from this by use of suitable electronic step-down transformers (choppers). The glow driver illustrated does this and offers the additional benefit of (through negative feedback) maintaining constant plug temperature independent of engine flooding, or battery voltage while the starter is cranking.

In this circuit, the PUT relaxation oscillator Q1 turns on the output chopper transistor Q2 at a fixed repetition rate determined by R1 and C1. Current then flows through the glow plug and the parallel combination of the current sense resistor R2 and the LED associated with the H11L Schmitt trigger. With the plug cold (low resistance), current

is high, the H11L is biased "on", and Q3 conducts to sustain base drive to Q2. Once the plug has attained optimum operating temperature, which can be monitored by its ohmic resistance, the H11L is programmed (via R_p) to switch off, removing base drive from Q3 and Q2.

However, since the H11L senses glow plug current, not resistance, this is only valid if supply voltage is constant, which is not always the case. Transistor Q4 provides suitable compensation in this case; if battery voltage falls (during cold cranking, for instance), the collector current of Q4 rises, causing additional current to flow through the LED, thus delaying the switch-off point for a given plug current. The circuit holds plug temperature relatively constant, with the plug either completely dry or thoroughly "wet", over an input voltage range of 8 to 16 volts. A similar configuration can be employed to maintain constant temperature for a full size truck diesel glow plug (28-volts supply, 12-volts glow plug); in this case, since plug temperature excursions are not so great, a hysteresis expansion resistor R_H may be required.

Fig. 7-4 Continued

GARAGE STOP LIGHT

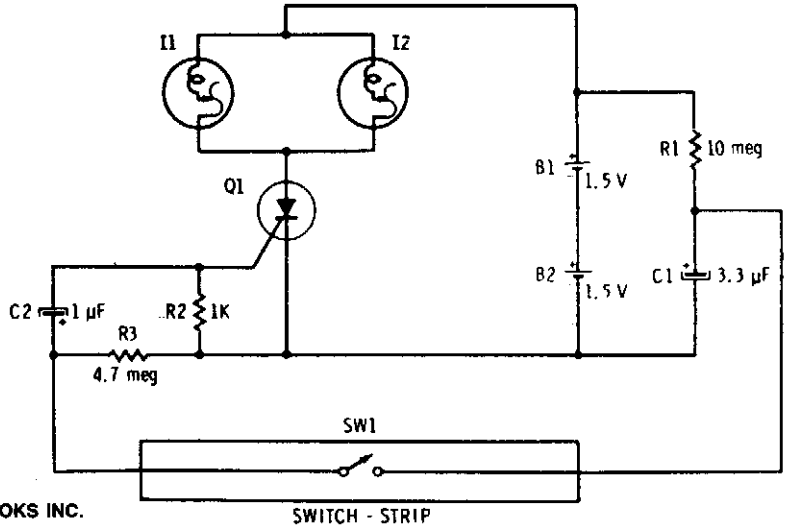

TAB BOOKS INC.

Fig. 7-5

Circuit Notes

Capacitor C1 is permanently connected across the 3-volt supply through 10 megohm resistor R1. The capacitor charges (relatively slowly) to 3 volts. The instant switch SW1 is closed, it connects the charged capacitor (C1) in series with C2 and R2. Capacitor C2 starts to charge, placing a positive-going voltage on the gate of the SCR and causing it to turn on. The two parallel-connected "self-flashing" bulbs I1 and I2 turn on. They flash and turn off the SCR and the circuit is off until car is driven off the switch and C1 can recharge.

BAR-GRAPH VOLTMETER

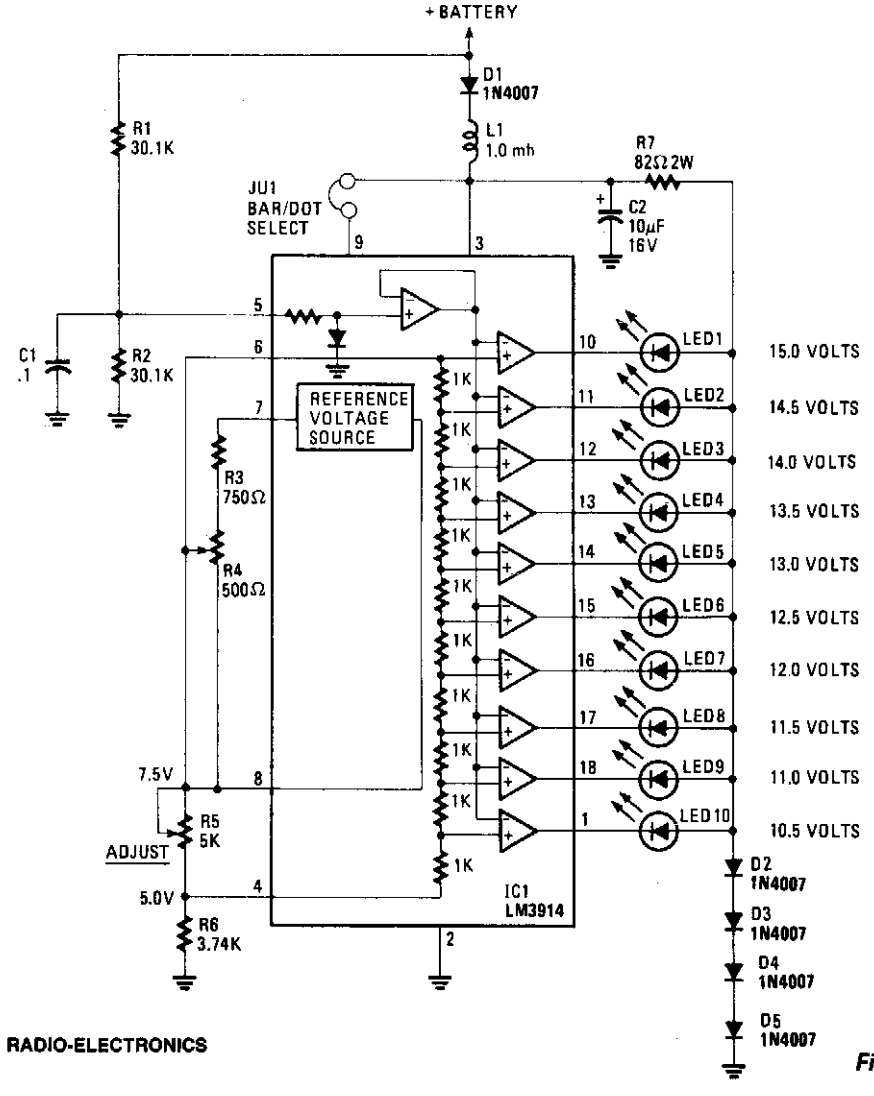

RADIO-ELECTRONICS

Fig. 7-6

Circuit Notes

This display uses ten LED's to display a voltage range from 10.5 to 15 volts. Each LED represents a 0.5-volt step in voltage. The heart of the circuit is the LM-3914 dot/bar display driver. Trimmer potentiometer R5 is adjusted so that 7.5 volts is applied to the top side of the divider. Resistor R7 and diodes D2 through D5 clamp the voltage applied to the LED's to about 3 volts. A lowpass filter made up of L1 and C2 guards against voltage spikes. Diode D1 is used to protect against reverse voltage in case the voltmeter is hooked up backward.

DELAYED-ACTION WINDSHIELD WIPER CONTROL

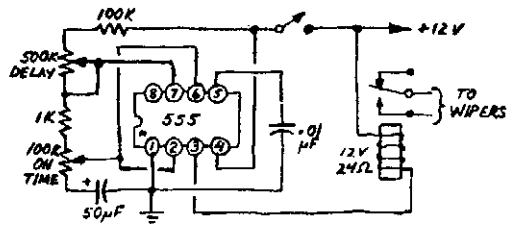

Fig. 7-7

POPULAR ELECTRONICS

SLOW-SWEEP WIPER CONTROL

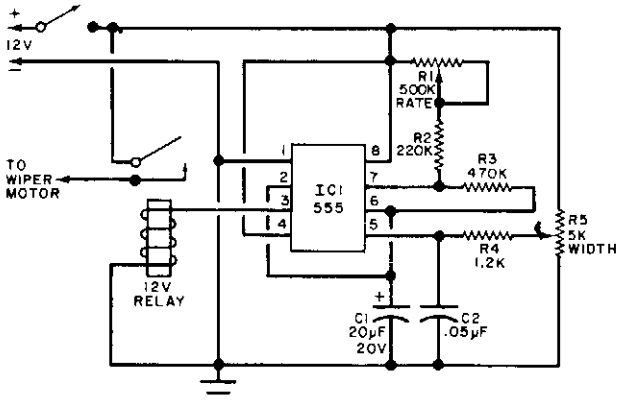

POPULAR ELECTRONICS

Circuit Notes

The relay which applies power to the wiper motor is actuated at periodic intervals by the timer circuit, closing the wiper motor contacts. Potentiometer R1 serves as the pulse rate control and potentiometer R5 as the pulse width control. These two controls should be adjusted for optimum performance after the unit is installed in a car.

Fig. 7-8

AUTOMOTIVE LIGHTS ON WARNING

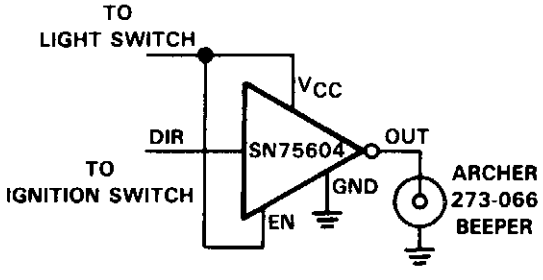

TEXAS INSTRUMENTS

Fig. 7-9

Circuit Notes

The SN75604, with input control logic but requiring only one supply rail, can be used in the "lights on" sensor and alarm driver. The device V_{CC} and enable inputs are connected to a voltage lead from the light switch. The direction control input is connected to a lead from the ignition switch. Only operation of the lights without the ignition will result in the alarm sounding. The beeper used in this application is an Archer 273-066 that will operate from 3 V to 28 V. At a typical 12 V level, it will produce a pulsating tone of about 95 dB at 30 cm. The alarm "on" current is about 12 mA when operating from a 12 V supply.

PTC THERMISTOR AUTOMOTIVE TEMPERATURE INDICATOR

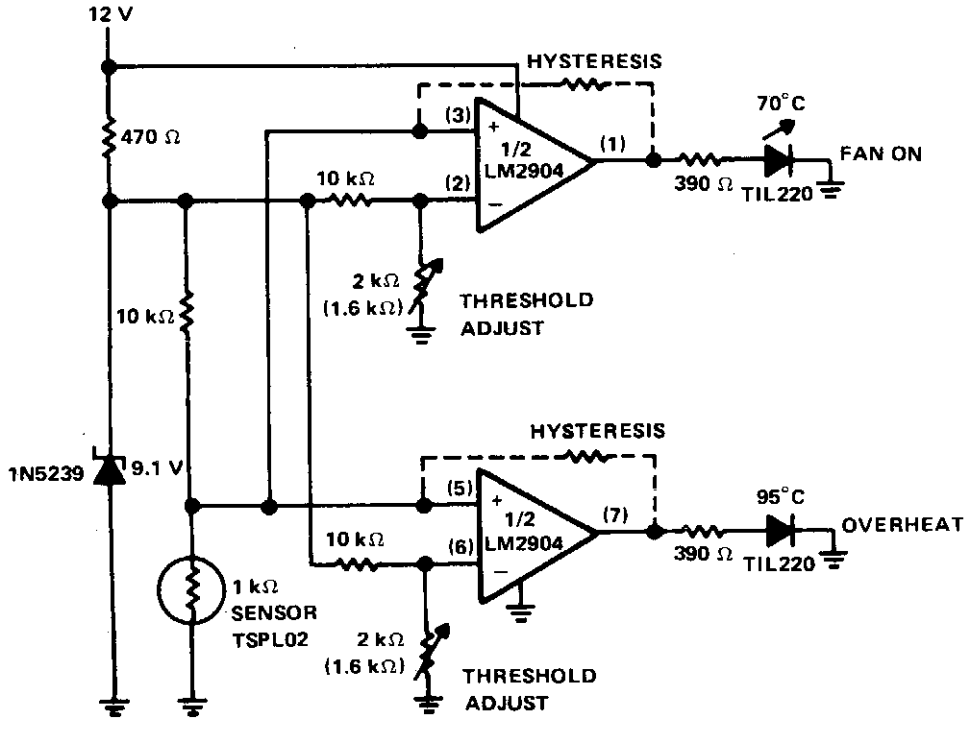

TEXAS INSTRUMENTS

Fig. 7-10

Circuit Notes

The circuit is used to indicate two different water temperature trip points by turning on LEDs when the temperatures are reached. The circuit is constructed around the LM2904 dual operational amplifier powered from the 12 V auto system. The thermistor is in series with a 10 kΩ resistor from ground to the positive 9.1 V point. The top of the thermistor is tied to both non-inverting inputs of the LM2904. The voltage at these inputs will change as the thermistor resistance changes with temperature. Each inverting input on the LM2904 has a reference, or threshold trip point, set by a 10 kΩ resistor and a 2 kΩ potentiometer in series across the 9.1 V regulated voltage. When this threshold is exceeded on the non-inverting input of LM2904, the TIL220 LED lights. The two trip points can be recalibrated or set to trip at different temperatures by adjusting the 2 kΩ potentiometer in each section. In addition to being used as warning lights as shown here, circuits can be added to turn on the fan motor or activate a relay.

ROAD ICE ALARM

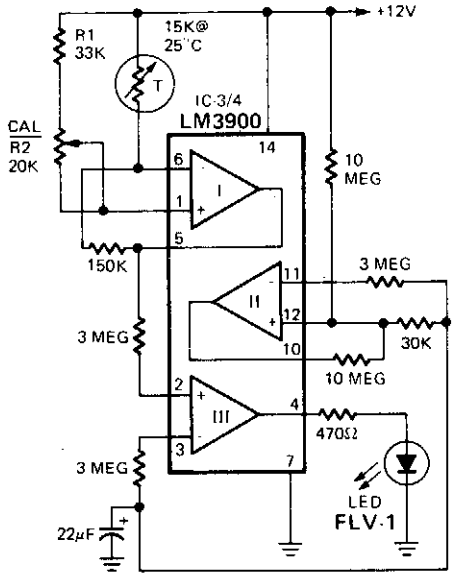

RADIO-ELECTRONICS

Fig. 7-11

Circuit Notes

The circuit uses a thermistor and three sections of a LM3900 quad op amp IC. When the temperature drops to 36°F the LED indicator flashes about once each second. The flashing rate increases as temperature drops to 32°F when the LED remains on. Amplifier I compares the thermistor's resistance to the resistance of the standard network connected to its noninverting input. Its output—fed to the noninverting input of op amp III—varies with temperature. Op amp II is a free-running multivibrator feeding a pulse signal of about 1 Hz to the inverting input of op amp III. This amplifier compares the outputs of op amps I and II and turns on the LED when the multivibrator's output level drops below op amp I. The monitor is calibrated by placing the thermistor in a mixture of crushed ice and water and adjusting the 20 kΩ pot so the LED stays on.

HEADLIGHT DIMMER

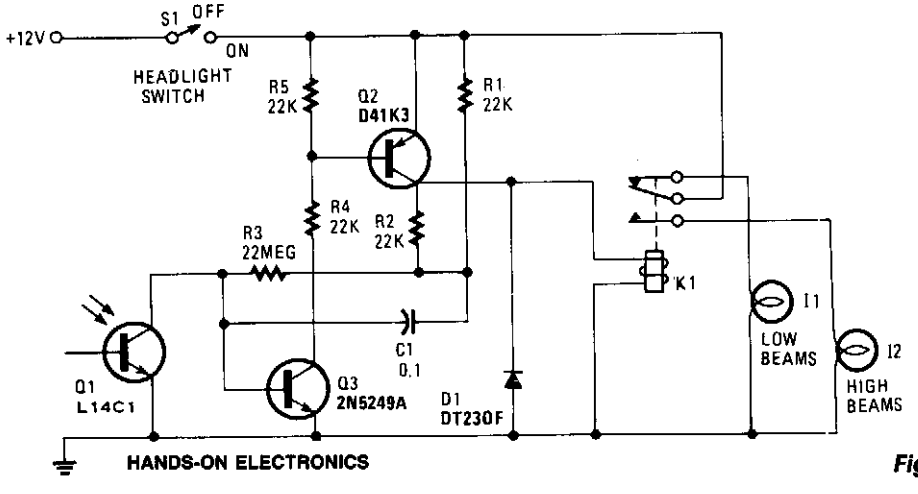

HANDS-ON ELECTRONICS

Fig. 7-12

Circuit Notes

When the lights of an on-coming car are sensed by photo-transistor Q1, things get going. Sensitivity is set by the 22-megohm resistor, R5, to about half a foot-candle. The relay used has a 12-volt, 0.3A coil. The L14C1 is complete with a lens that has a diameter of one inch for a 10° viewing angle.

ICE FORMATION ALARM

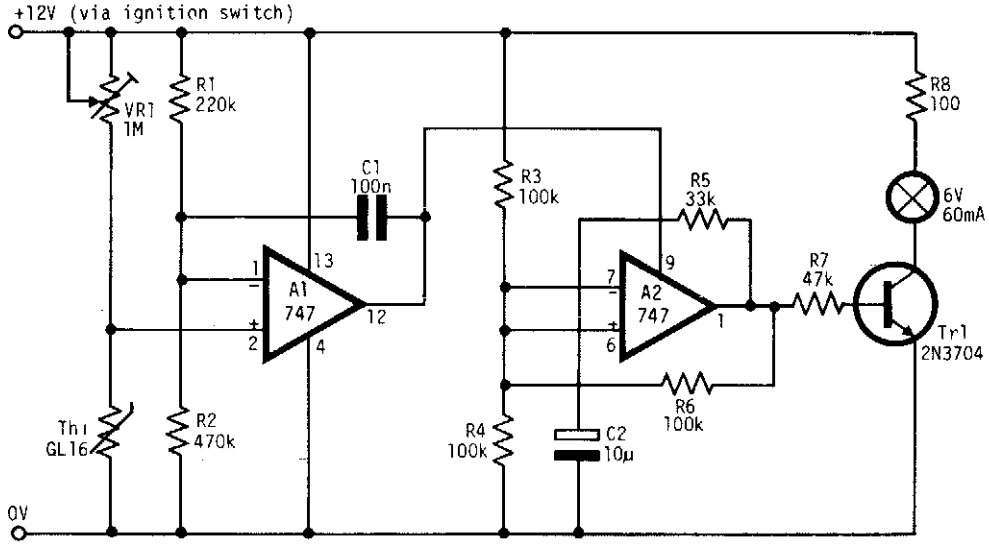

ELECTRONIC ENGINEERING

Fig. 7-13

Circuit Notes

The circuit warns car drivers when the air temperature close to the ground approaches 0°C, thereby indicating possible formation of ice on the road surface. Op amp A1 is wired as a voltage level sensor. Op amp A2 is wired as an astable multivibrator which, by means of current buffer Tr1, flashes a filament lamp at about 1 Hz. As air temperature falls, a point is reached when the voltage at pin 2 just rises above the voltage at pin 1. The output of A1 is immediately driven into positive saturation, since it is operated open-loop. This positive output voltage powers A2 through its V + connection on pin 9, starting the oscillator. The thermistor is a glass bead type with a resistance of about 20 MΩ at 20°C. VR1 is adjusted so that the lamp starts flashing when the air temperature is 1 to 2°C.

DELAY CIRCUITS FOR HEADLIGHTS

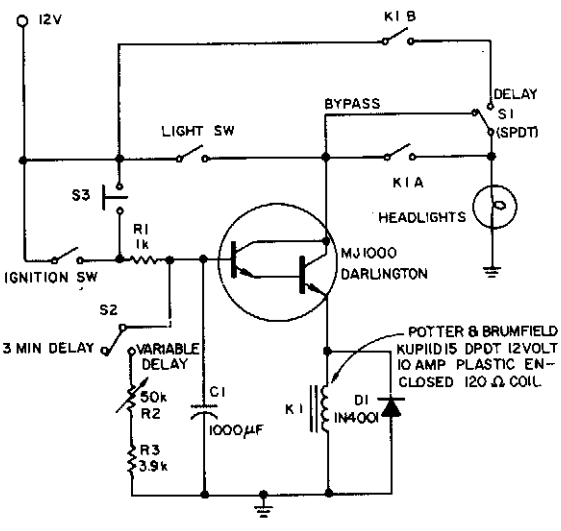

1. **Automobile headlights may be kept on** up to 3 minutes after you leave the car with this Darlington time-delay circuit.

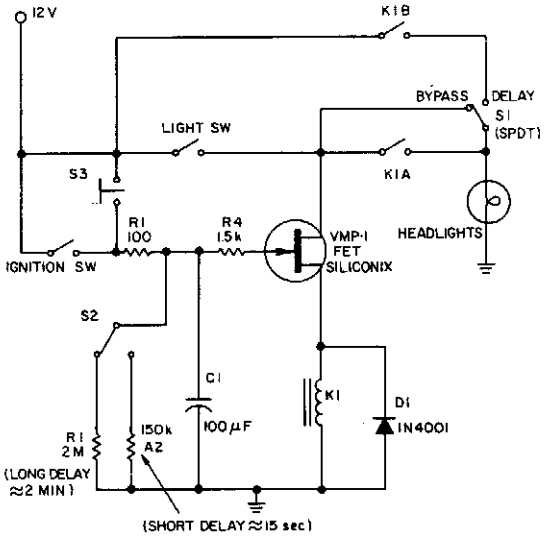

2. **A FET version of the delay circuit** allows the use of a smaller timing capacitor, C_1, for a given delay, and almost instantaneous reset with S_3; the Darlington circuit needs almost 2 s.

ELECTRONIC DESIGN ***Fig. 7-14***

Circuit Notes

This circuit keeps an automobile's headlights on temporarily. It also will turn the lights off, even if you forget to flip the light switch. The circuit's shut-off delay is actuated only after both the ignition and light switches have been on, and only if the ignition switch is turned off first. If the light switch is turned off first, no delay results. Parking and brake-light operation is not affected. The maximum time out can be up to 3 minutes in part 1 and hours with the circuit in part 2, depending on the relay selected and the value of R2. A switch S2 can be used to permit selection of either a short or long delay. Momentary switch S3 can restart circuit timing before the time-out is completed. A bypass switch, S1 removes the delay action.

IGNITION TIMING LIGHT

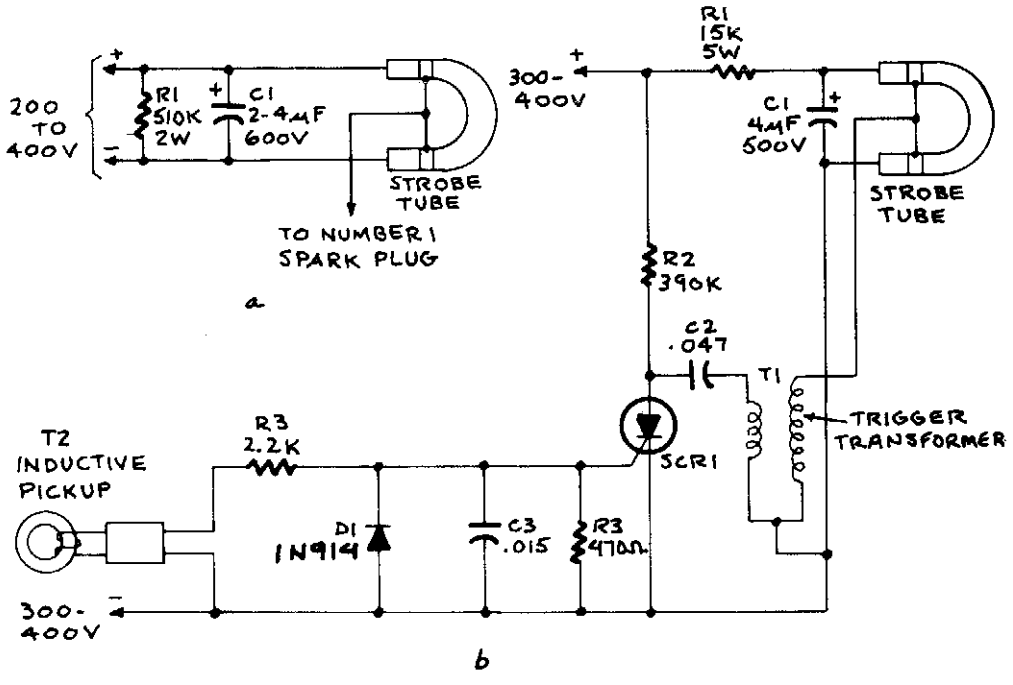

RADIO-ELECTRONICS

Fig. 7-15

Circuit Notes

Figure *A* shows the circuit of a direct-trigger timing light. The trigger voltage is taken from the car's ignition circuit by a direct connection to a spark plug. A circuit using an inductive pickup is shown in Fig. *B*. A trigger transformer is used to develop the high-voltage pulse for triggering. The triggering circuit consists of T1, C1, SCR1, inductive pickup coil T2, and the waveshaping components in the SCR's gate circuit.

When the spark plug fires, it induces a pulse in pickup coil T2 that triggers the SCR gate. The SCR fires and discharges C2 through the primary of T1. The secondary of T1 feeds a high-voltage pulse to the trigger electrode of the flash tube. That pulse causes the gas—usually neon or xenon—to ionize. The ionized gas provides a low-resistance path for C1 to discharge, thereby creating a brilliant flash of light.

Resistor R1 limits current from the supply as the tube fires. When C1 is fully discharged the strobe tube cuts off and returns to its "high-resistance" state. The current through R2 is not enough to sustain conduction through SCR1, so it cuts off and remains off until it is re-triggered by a gate pulse.

DIGI-TACH

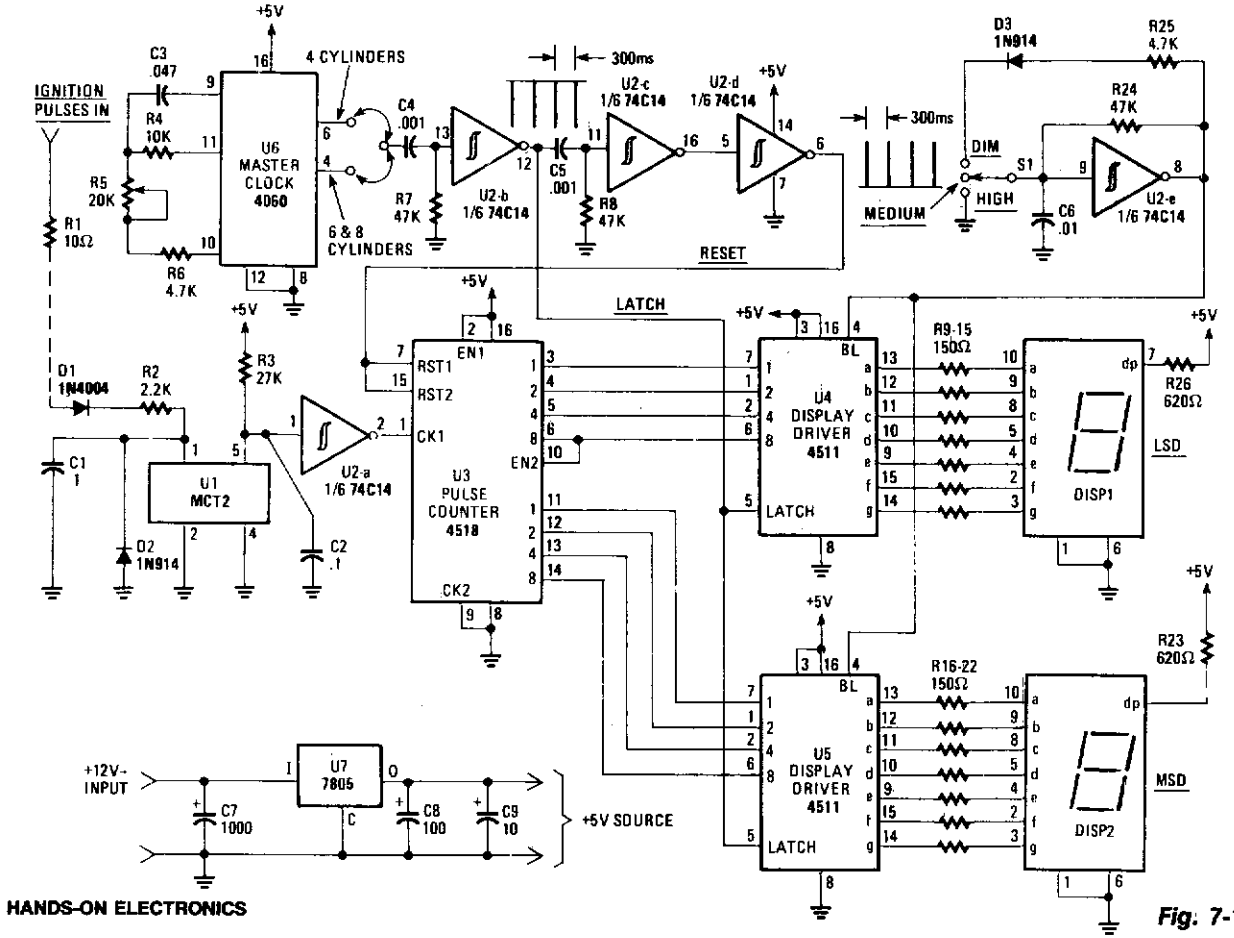

Fig. 7-16

Circuit Notes

The Digi-Tach contains a master-clock circuits (U6), latch and reset pulse generators (U2-b-U2-d), input signal conditioner (U1, U2-a), pulse counter (U3), display and display drivers (DIS1, DIS2, U4, and U5), and a voltage regulator (U7). As an added feature, Digi-Tach contains a dimmer circuit (U2-e).

CAR-WIPER CONTROL

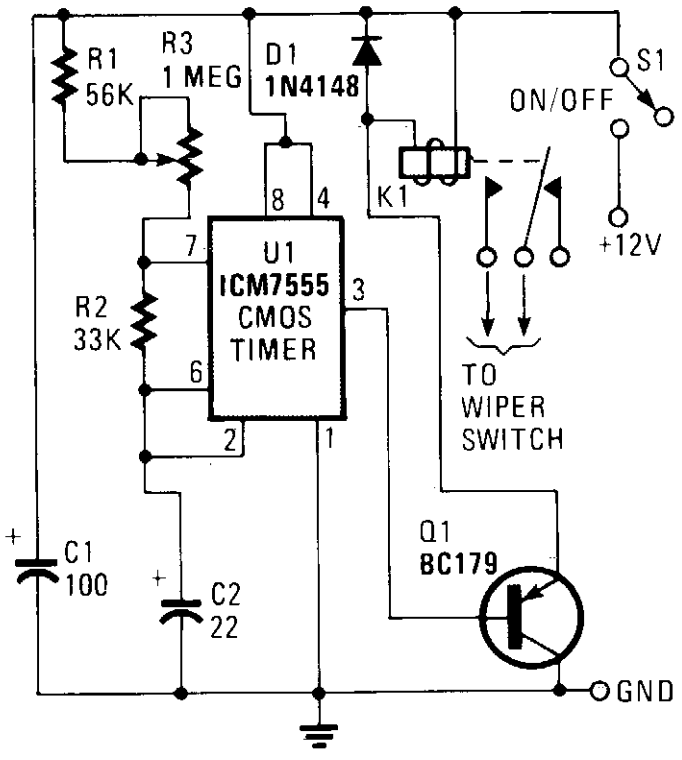

HANDS-ON ELECTRONICS *Fig. 7-17*

Circuit Notes

U1 is configured to operate in the standard astable mode, providing a form of relaxation oscillator. When power is applied, C2 initially charges through R1, R2 and R3 to two-thirds of the supply voltage. At that point, U1 senses that its threshold voltage at pin 6 has been reached, and triggers the timer, causing its output at pin 3 to go high. That high, applied to the base of Q1, keeps the transistor in the off state. Now C2 begins to discharge through R2 to pin 7 of U1. When C2 has discharged to about one-third of the supply voltage, U1 is toggled back to its original state. C2 starts to charge again, as pin 3 of U1 goes low. The low at pin 3 causes Q1—which serves as an emitter-follower buffer stage—to turn on, allowing current to flow through the coil of relay K1. That, in turn, causes K1's contacts to close, applying power to the wipers. The charge time of capacitor C2 is determined by the setting of potentiometer R3. Capacitor C2 should be a tantalum type, and actually, almost any 12-volt coil relay with sufficiently heavy contacts should serve well.

AUTOMATIC HEADLIGHT DIMMER

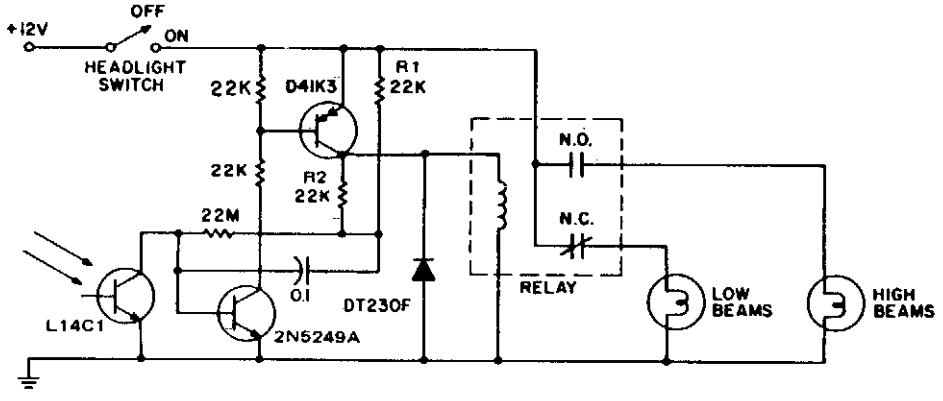

RELAY: 12V, 0.3A COIL: 20A, FORM C, CONTACTS OR SOLID-STATE SWITCHING OF 16A STEADY-STATE 150A COLD FILAMENT SURGE, RATING.

LENS: MINIMUM 1" DIAMETER, POSITIONED FOR ABOUT 10° VIEW ANGLE.

GENERAL ELECTRIC

Fig. 7-18

Circuit Notes

This circuit switches car headlights to the low beam state when it senses the lights of an on-coming car. The received light is very low level and highly directional, indicating the use of a lens with the detector. A relatively large amount of hysteresis is built into the circuit to prevent "flashing lights." Sensitivity is set by the 22 megohm resistor to about 0.5 ft. candle at the transistor (0.01 at the lens), while hysteresis is determined by the R1, R2 resistor voltage divider, parallel to the D41K3 collector emitter, which drives the 22 megohm resistor; maximum switching rate is limited by the 0.1 μF capacitor to 15/minute.

8

Battery Chargers and Zappers

The sources of the following circuits are contained in the Sources section beginning on page 694. The figure number contained in the box of each circuit correlates to the source entry in the Sources section.

Rapid Battery Charger for ICOM IC-2A
Gel Cell Charger
Ni-Cad Battery Zapper
Lithium Battery Charger
Thermally Controlled Ni-Cad Charger
Ni-Cad Battery Zapper II
Battery Charger
Wind Powered Battery Charger
Battery Charger Operates On Single Solar Cell
Versatile Battery Charger
14-Volt, 4-Amp Battery Charger/Power Supply

RAPID BATTERY CHARGER FOR ICOM IC-2A

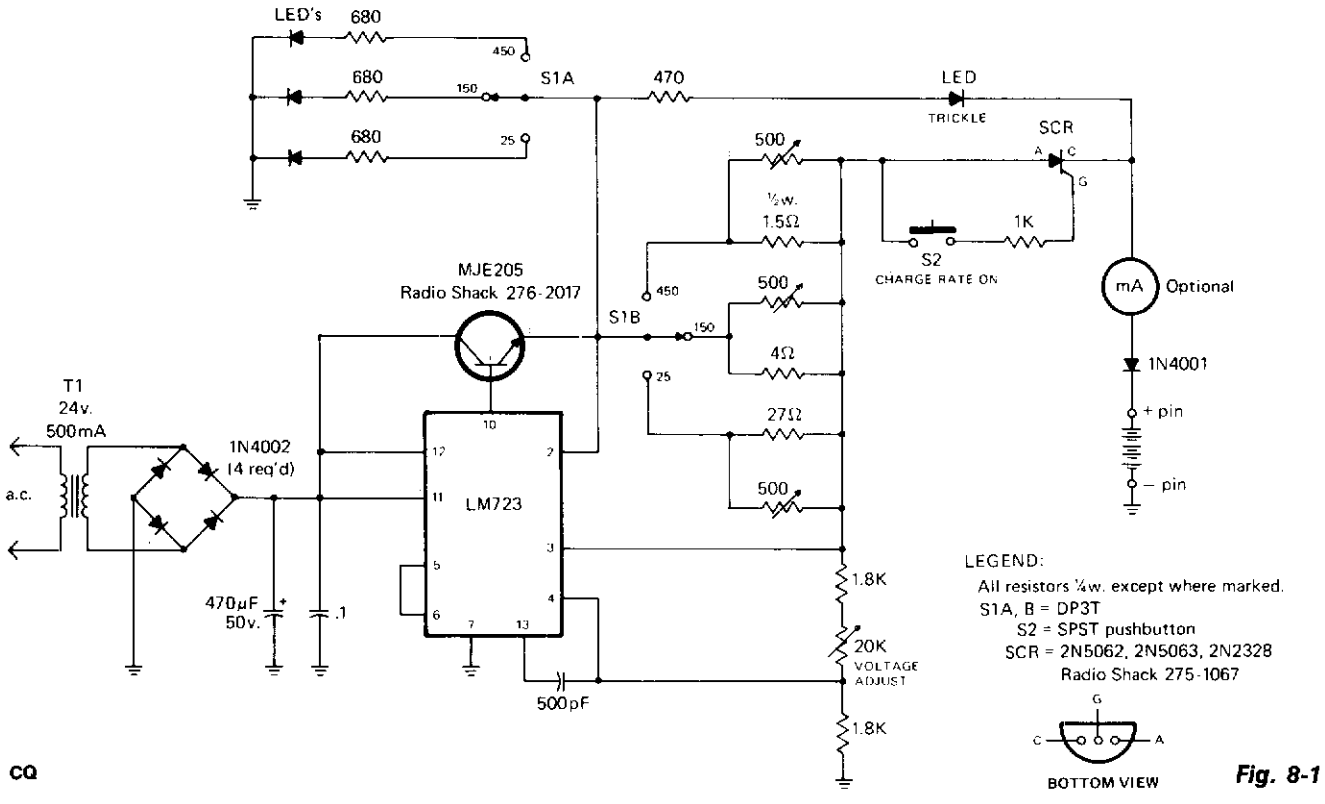

CQ

Fig. 8-1

Circuit Notes

Rectified and filtered voltage from the 24 Vac transformer is applied to the LM723 voltage regulator and the npn pass transistor set up for constant current supply. The 470 ohm resistor limits trickle current until the momentary pushbutton (S2) is depressed, the SCR turns on and current flows through the previously determined resistor network limiting the charging current. The SCR will turn off when the thermal cutout circuit inside the battery pack opens up.

GEL CELL CHARGER

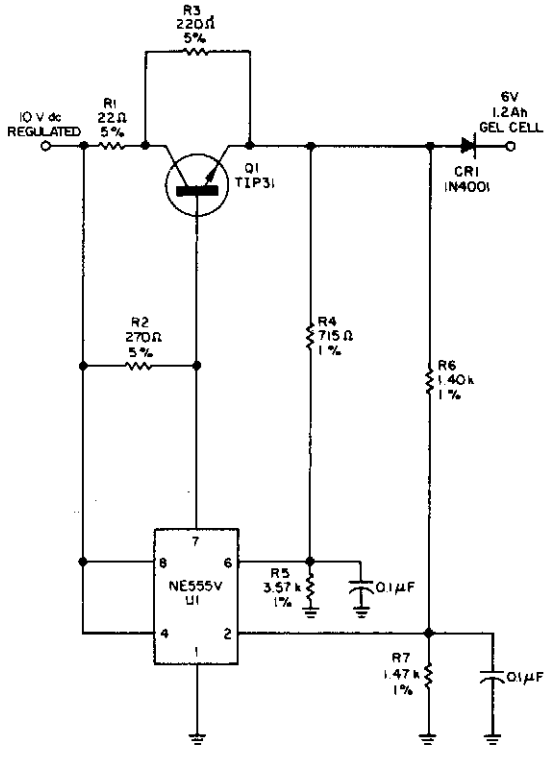

ELECTRONIC DESIGN

Circuit Notes

This circuit detects a full-charge state and automatically switches to a float condition—from 240 mA to 12 mA.

Fig. 8-2

Ni-CAD BATTERY ZAPPER

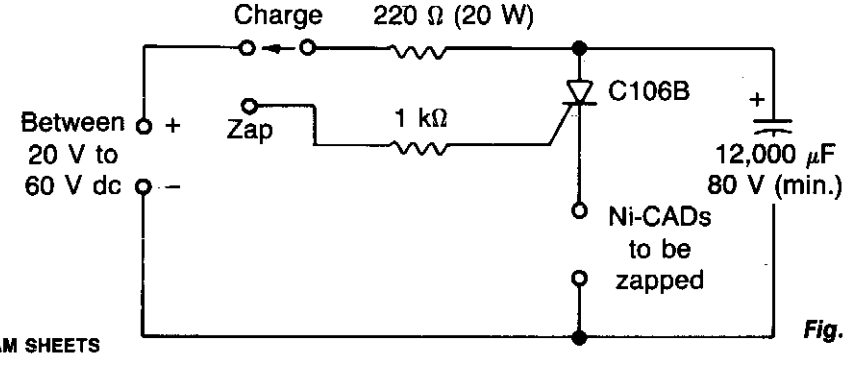

WILLIAM SHEETS

Fig. 8-3

Circuit Notes

The short in a Ni-Cad battery can be "burned off" with this zapper. Use of the SCR keeps heavy discharge current from damaging switch contacts.

LITHIUM BATTERY CHARGER

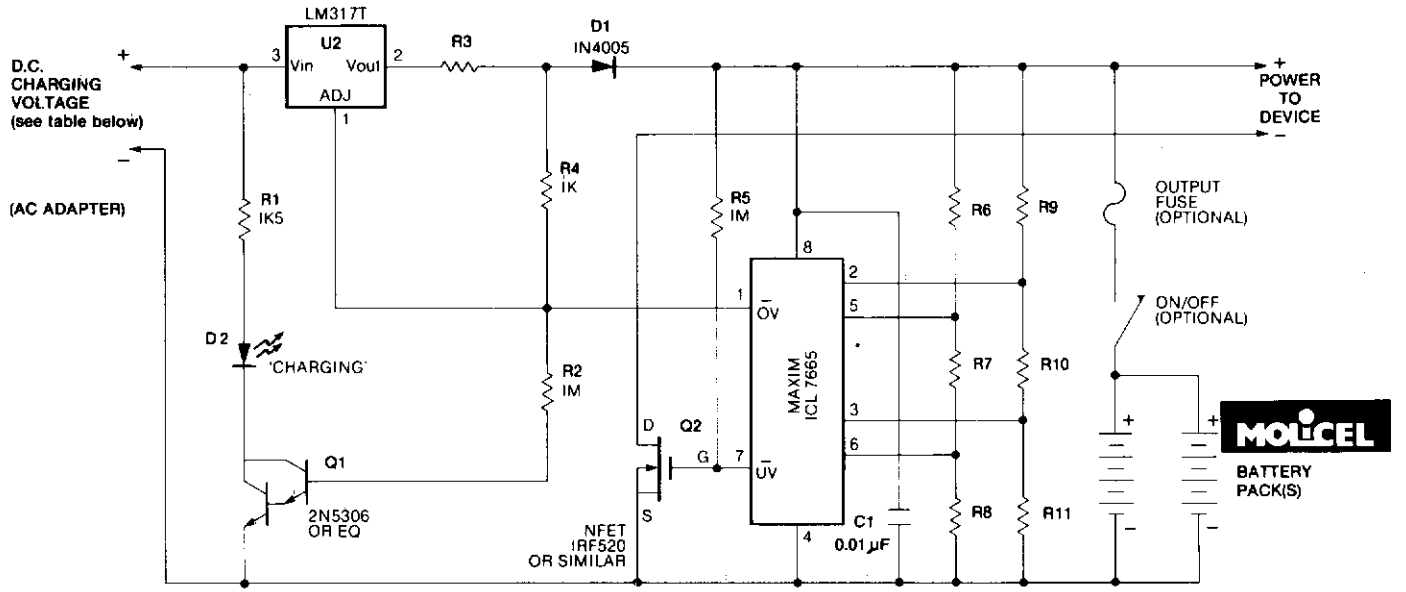

MOLI ENERGY LIMITED

Fig. 8-4

Circuit Notes

Charging is accomplished with a constant current of 60 mA for AA cells to a cutoff voltage of 2.4 V per cell at which point the charge must be terminated. The charging system shown is designed for multi-cell battery packs of 2 to 6 series-connected cells or series/parallel arrangements. It is essential that all cells assembled in the pack be at an identical state-of-charge (voltage) prior to charging. The maximum upper cut-off voltage is 15.6 volts (6 × 2.6 V).

THERMALLY CONTROLLED Ni-CAD CHARGER

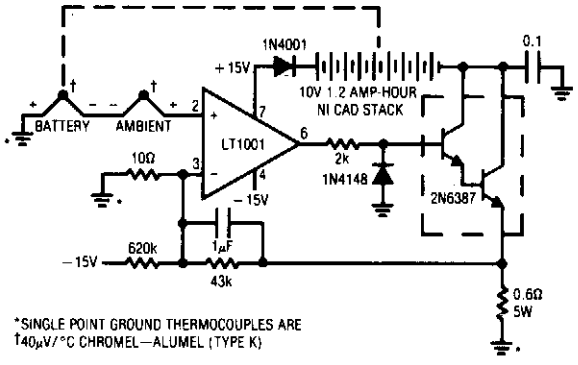

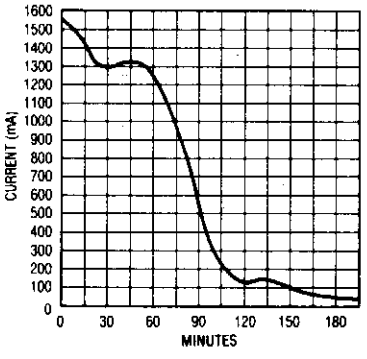

LINEAR TECHNOLOGY CORPORATION

Fig. 8-5

Circuit Notes

One way to charge Ni-Cad batteries rapidly without abuse is to measure cell temperature and taper the charge accordingly. The circuit uses a thermocouple for this function. A second thermocouple nulls out the effects of ambient temperature. The temperature difference between the two thermocouples determines the voltage which appears at the amplifier's positive input. As battery temperature rises, this small negative voltage (1°C difference between the thermocouples equals 40 μV) becomes larger. The amplifier, operating at a gain of 4300, gradually reduces the current through the battery to maintain its inputs at balance. The battery charges at a high rate until heating occurs and the circuit then tapers the charge. The values given in the circuit limit the battery surface temperature rise over ambient to about 5°C.

NI-CAD BATTERY ZAPPER II

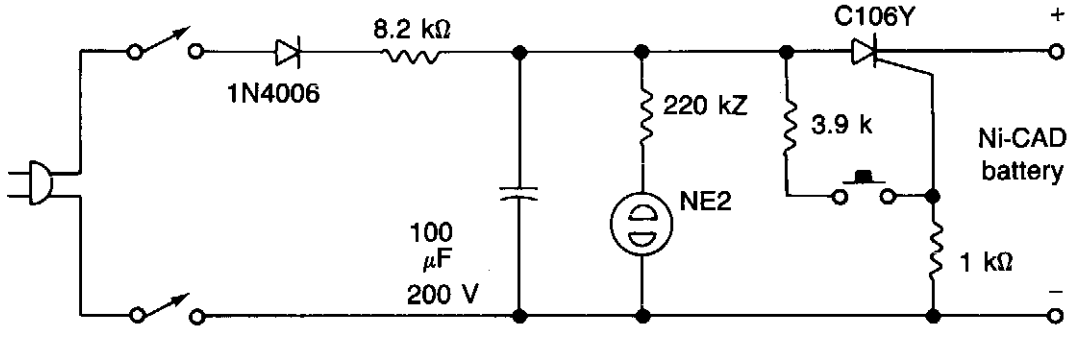

WILLIAM SHEETS

Fig. 8-6

Circuit Notes

This zapper clears internal short in nickel cadmium batteries by burning it away. CAUTION: The negative battery terminal is connected to one side of the ac line. For safety operation use a 1:1 isolation transformer.

BATTERY CHARGER

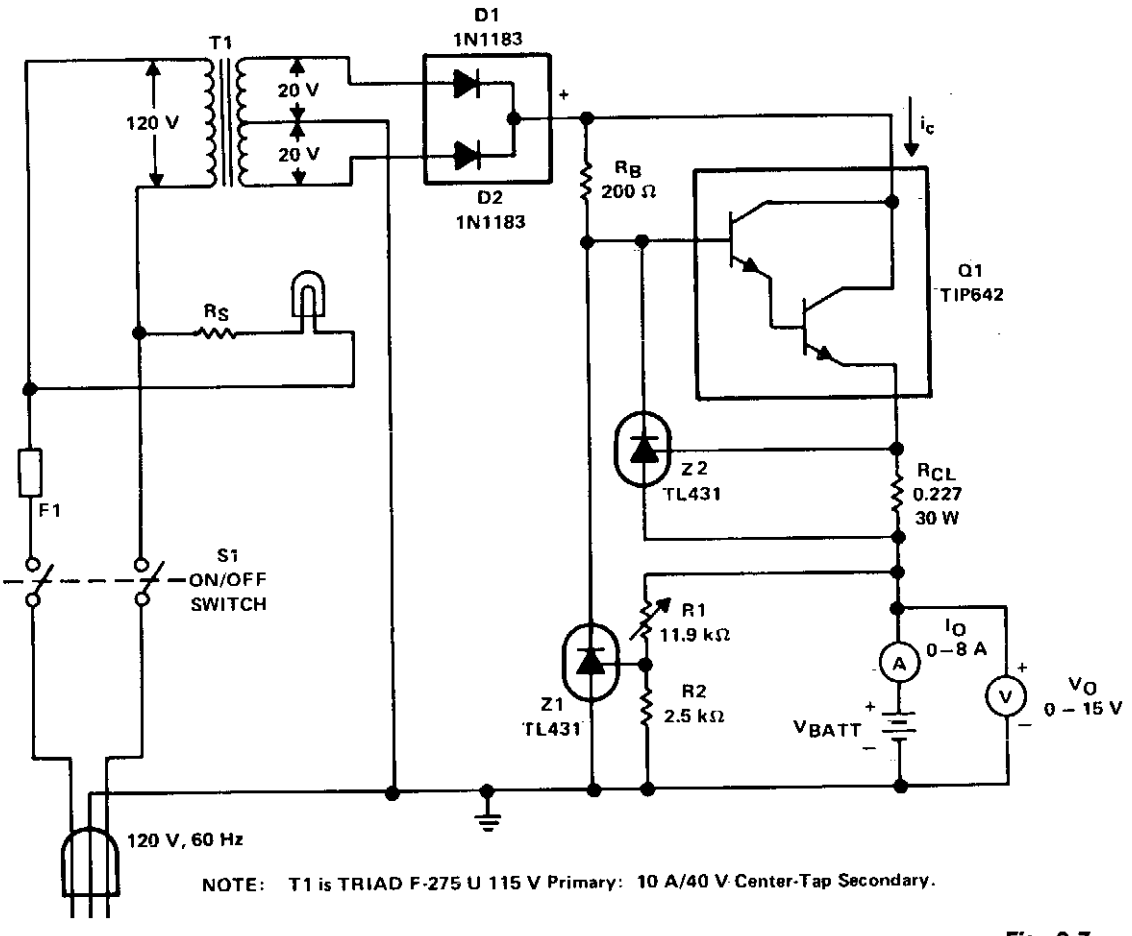

TEXAS INSTRUMENTS

Fig. 8-7

Circuit Notes

The charger is based on a charging voltage of 2.4 V per cell, in accordance with most manufacturers' recommendations. The circuit pulses the battery under charge with 14.4 V (6 cells × 2.4 V per cell) at a rate of 120 Hz. The design provides current limiting to protect the charger's internal components while limiting the charging rate to prevent damaging severely discharged lead-acid batteries. The maximum recommended charging current is normally about one-fourth the ampere-hour rating of the battery. For example, the maximum charging current for an average 44 ampere-hour battery is 11 A. If the impedance of the load requires a charging current greater than the 11 A current limit, the circuit will go into current limiting. The amplitude of the charging pulses is controlled to maintain a maximum peak charging current of 11 A (8 A average).

WIND POWERED BATTERY CHARGER

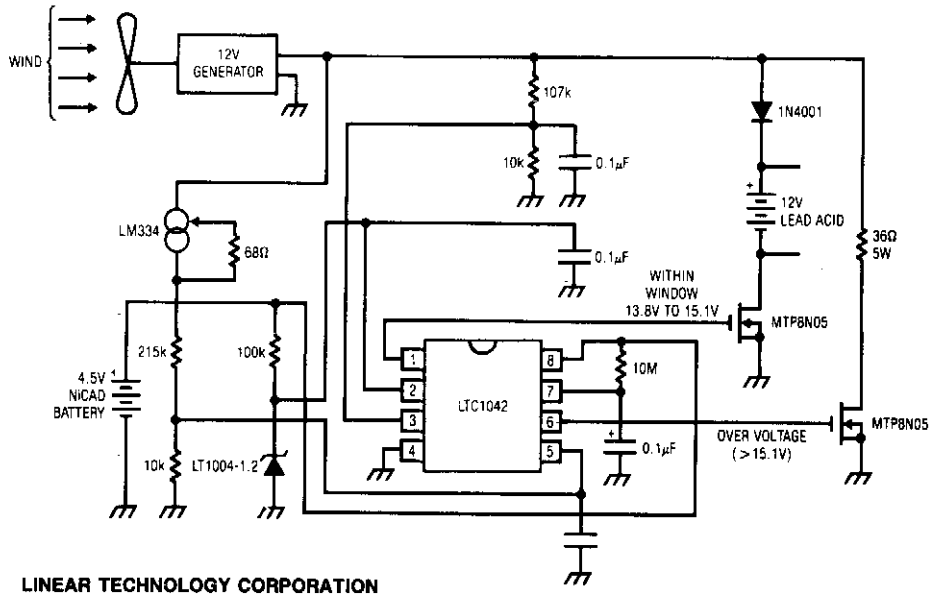

LINEAR TECHNOLOGY CORPORATION

Fig. 8-8

Circuit Notes

The dc motor is used as a generator with the voltage output being proportional to its rpm. The LTC1042 monitors the voltage output and provides the following control functions.

1. If generator voltage output is below 13.8 V, the control circuit is active and the Ni-Cad battery is charging through the LM334 current source. The lead acid battery is not being charged.
2. If the generator voltage output is between 13.8 V and 15.1 V, the 12 V lead acid battery is being charged at about 1 amp/hour rate (limited by the power FET).
3. If generator voltage exceeds 15.1 V (a condition caused by excessive wind speed or 12 V battery being fully charged) then a fixed load is connected limiting the generator rpm to prevent damage.

This charger can be used as a remote source of power where wind energy is plentiful such as on sailboats or remote radio repeater sites. Unlike solar powered panels, this system will function in bad weather and at night.

BATTERY CHARGER OPERATES ON SINGLE SOLAR CELL

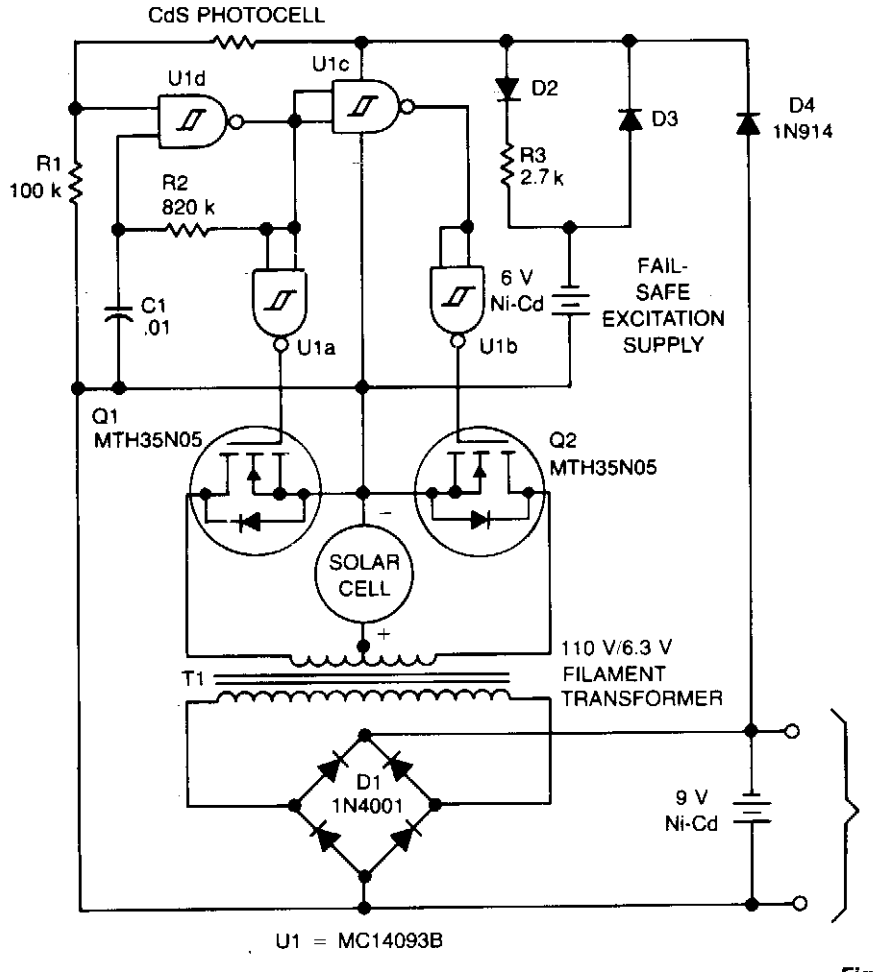

MOTOROLA

Fig. 8-9

Circuit Notes

The circuit charges a 9-V battery at about 30 mA per input ampere at 0.4 V. U1, a quad Schmitt trigger, operate as an astable multivibrator to drive push-pull TMOS devices Q1 and Q2. Power for U1 is derived from the 9-V battery via D4; power for Q1 and Q2 is supplied by the solar cell. The multivibrator frequency, determined by R2-C1, is set to 180 Hz for maximum efficiency from a 6.3-V filament transformer, T1. The secondary of the transformer is applied to a full wave bridge rectifier, D1, which is connected to the batteries being charged. The small Ni-Cad battery is a fail-safe excitation supply to allow the system to recover if the 9-V battery becomes fully discharged.

A CdS photocell shuts off the oscillator in darkness to preserve the fail-safe battery during shipping and storage, or prolonged darkness.

VERSATILE BATTERY CHARGER

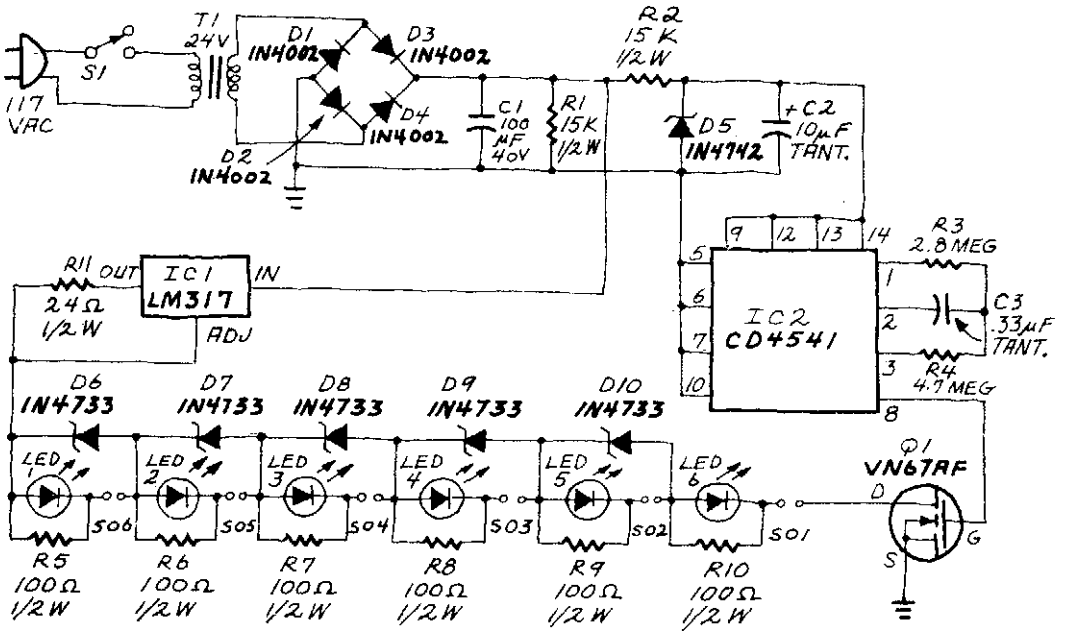

RADIO ELECTRONICS

Fig. 8-10

Circuit Notes

An LM317 voltage regulator is configured as a constant-current source. It is used to supply the 50 mA charging current to S01-S06, an array of AA-cell battery holders. Each of the battery holders is wired in series with an LED and its associated shunt resistor. When the battery holder contains a battery, the LED glows during charging. Each battery holder/LED combination is paralleled by a 5.1-volt Zener diode. If the battery holder is empty, the Zener conducts the current around the holder.

A timing circuit prevents overcharging. When power is applied to the circuit, timing is initiated by IC2, a CD4541 oscillator/programmable timer. The output of IC2 is fed to Q1. When that output is high, the transistor is on, and the charging circuit is completed. When the output is low, the transistor is off, and the path to ground is interrupted.

14-VOLT, 4-AMP BATTERY CHARGER/POWER SUPPLY

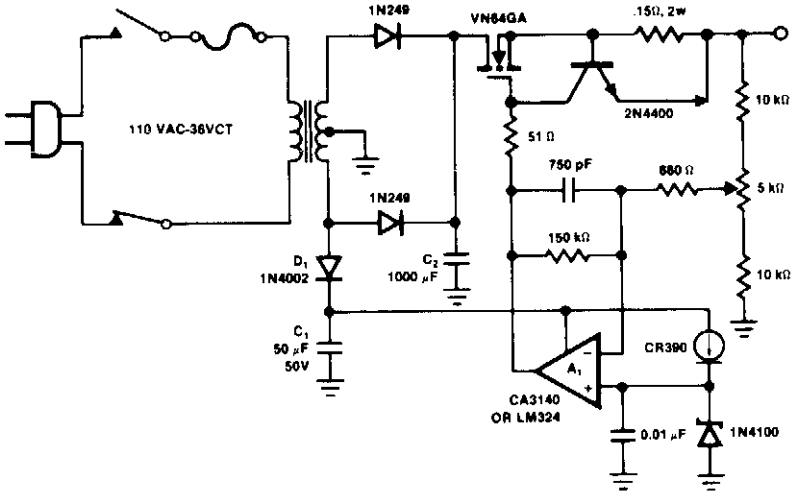

SILICONIX, INC.

Fig. 8-11

Circuit Notes

Operation amplifier A1 directly drives the VN64GA with the error signal to control the output voltage. Peak rectifier D1, C1 supplies error amplifier A1 and the reference zener. This extra drive voltage must exceed its source voltage by several volts for the VN64GA to pass full load current. The output voltage is pulsating dc which is quite satisfactory for battery charging. To convert the system to a regulated dc supply, capacitor C2 is increased and another electrolytic capacitor is added across the load. The response time is very fast, being determined by the op-amp. The 2N4400 current limiter circuit prevents the output current from exceeding 4.5 A. However, maintaining a shorted condition for more than a second will cause the VN64GA to exceed its temperature ratings. A generous heat sink, on the order of 1°C/W, must be used.

9

Battery Monitors

The sources of the following circuits are contained in the Sources section beginning on page 694. The figure number contained in the box of each circuit correlates to the source entry in the Sources section.

Dynamic, Constant Current Load for Fuel Cell/Battery Testing
Voltage Detector Relay for Battery Charger
Battery Status Indicator
Low-Battery Indicator
A Lithium Battery's State-of-Charge Indicator
Step-Up Switching Regulator for 6-V Battery
Battery Voltage Monitor
Battery Monitor

DYNAMIC, CONSTANT CURRENT LOAD FOR FUEL CELL/BATTERY TESTING

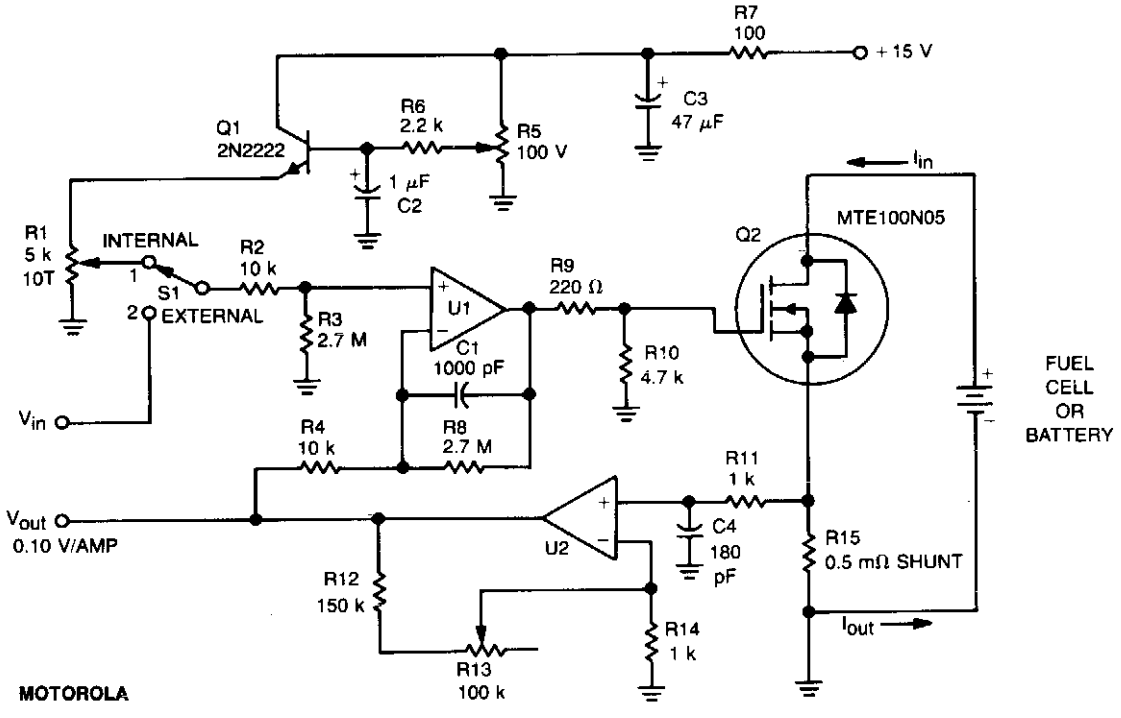

Fig. 9-1

Circuit Notes

This circuit was designed for testing fuel cells, but it could also be used for testing batteries under a constant current load. It provides a dynamic, constant current load, eliminating the need to manually adjust the load to maintain a constant load.

For fuel cell application, the load must be able to absorb 20-40 A, and since a single cell develops only 0.5 to 1.0 V, bipolar power devices (such as a Darlington) are impractical. Therefore, this dynamic load was designed with a TMOS Power FET (Q2).

With switch S1 in position 1, emitter follower Q1 and R1 establish the current level for the load. In position 2, an external voltage can be applied to control the current level.

Operational amplifier U1 drives TMOS device Q1, which sets the load current seen by the fuel cell or battery. The voltage drop across R15, which is related to the load current, is then applied to U2, whose output is fed back to U1. Thus, if the voltage across R15 would tend to change, feedback to the minus input of U1 causes that voltage (and the load current) to remain constant. Adjustment of R13 controls the volts/amp of feedback. The V_{OUT} point is used to monitor the system.

VOLTAGE DETECTOR RELAY FOR BATTERY CHARGER

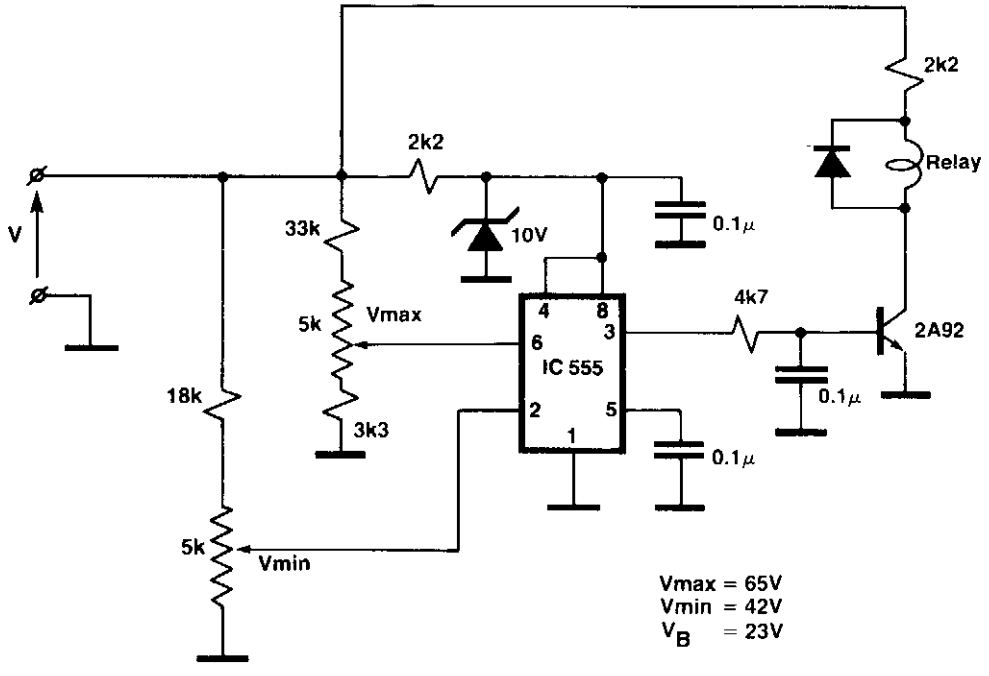

ELECTRONIC ENGINEERING

Fig. 9-2

Circuit Notes

While the battery is being charged, its voltage is measured at V. If the measured voltage is lower than the minimum the relay will be energized, that will connect the charger circuit. When the battery voltage runs over the maximum set point, the relay is deenergized and it will be held that way until the voltage decreases below the minimum when it will be connected again. The voltage is lower than a threshold V_B (low breaking voltage) the relay will be assumed that such a low voltage is due to one or several damaged battery components. Of course V_B is much lower than the minimum set point.

BATTERY STATUS INDICATOR

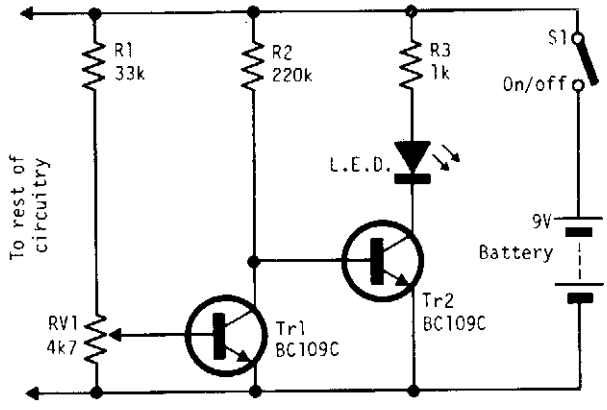

ELECTRONIC ENGINEERING

Fig. 9-3

Circuit Notes

Continually monitors battery voltage during use and consumes only about 250 μA (until the end point is reached). Near the end point Tr1 turns off, allowing Tr2 to illuminate the LED to increase current drain further leading to a distinct turn off point.

LOW-BATTERY INDICATOR

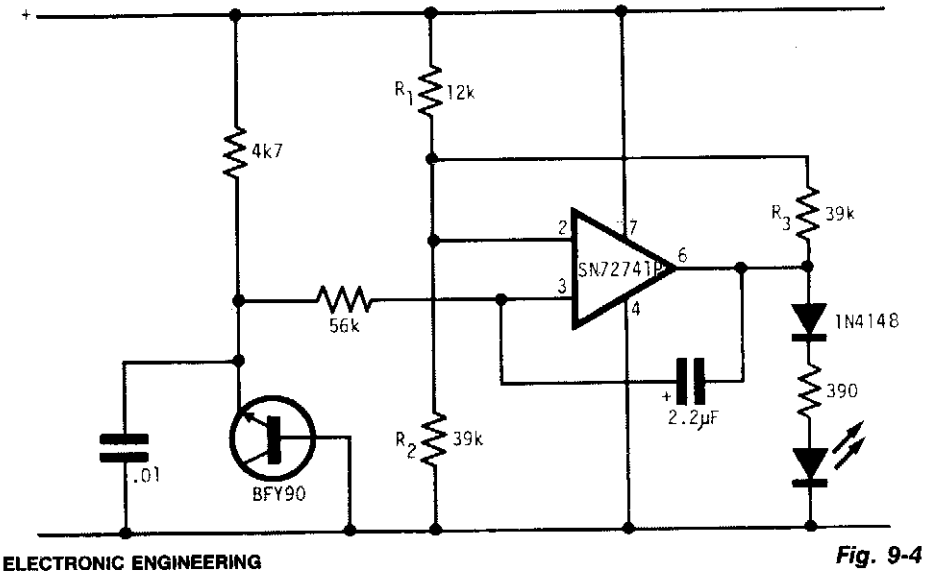

ELECTRONIC ENGINEERING

Fig. 9-4

Circuit Notes

Under good battery conditions the LED is off. As the battery voltage falls, the LED begins to flash until, in the low battery condition, the LED lights continuously. Designed for a 9-volt battery, with the values shown the LED flashes from 7.5 to 6.5 volts.

A LITHIUM BATTERY'S STATE-OF-CHARGE INDICATOR

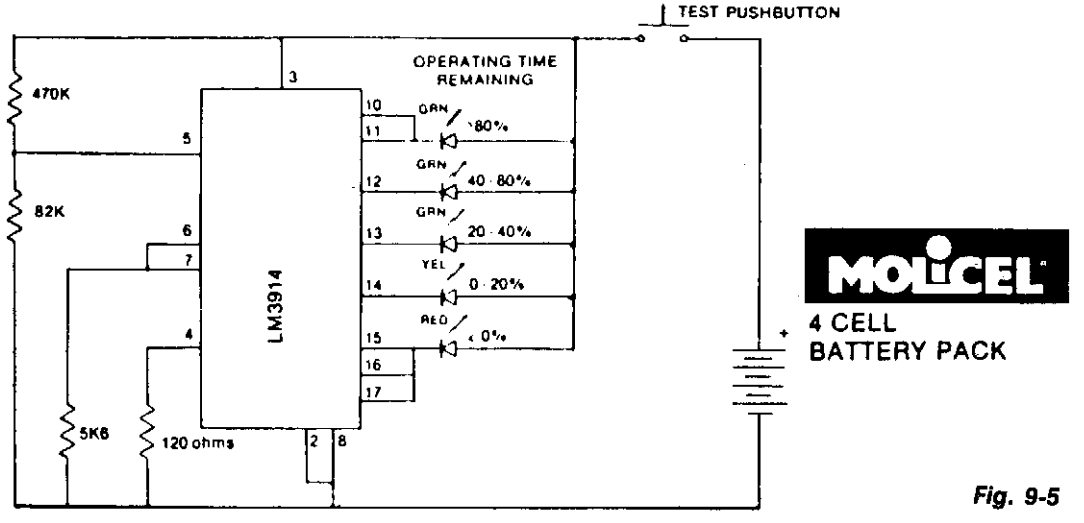

Fig. 9-5

MOLI ENERGY LIMITED

Circuit Notes

State-of-Charge indication of a sloping-voltage discharge can be used as a state-of-charge indicator. A typical voltage comparator circuit that gives a visual indication of state-of-charge is shown. Components identified are for a 4-cell input voltage of 9.6 to 5.2 volts.

STEP-UP SWITCHING REGULATOR FOR 6-V BATTERY

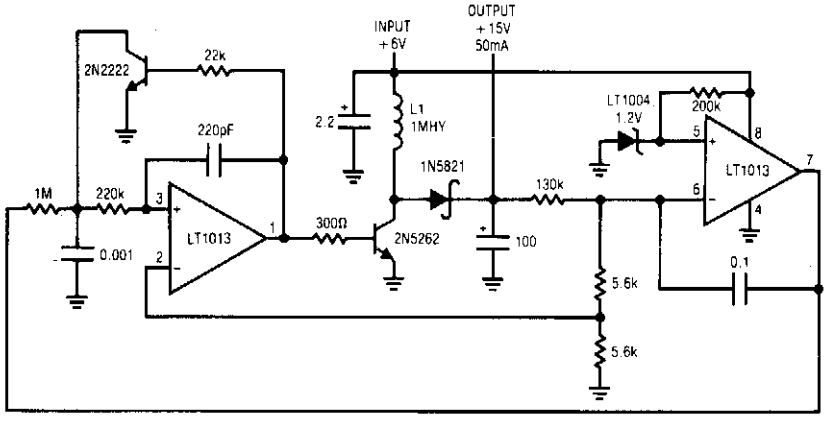

L1 = AIE–VERNITRON 24-104
78% EFFICIENCY

LINEAR TECHNOLOGY CORP.

Fig. 9-6

BATTERY VOLTAGE MONITOR

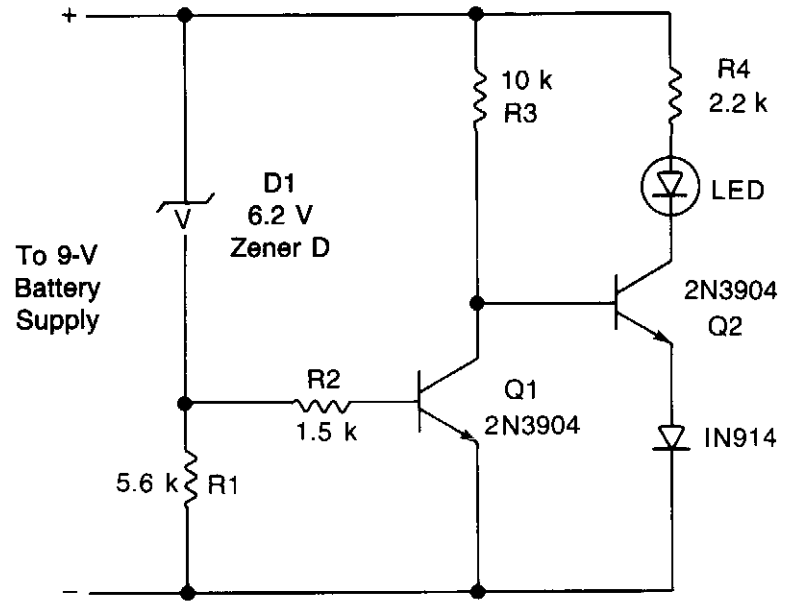

WILLIAM SHEETS

Fig. 9-7

Circuit Notes

This circuit gives an early warning of the discharge of batteries. Zener diode D1 is chosen for the voltage below which an indication is required (9 V). Should the supply drop to below 7 V, D1 will cease conducting causing Q1 to shut off. Its collector voltage will now increase causing Q2 to start conducting via LED1 and its limiting resistor R4.

BATTERY MONITOR

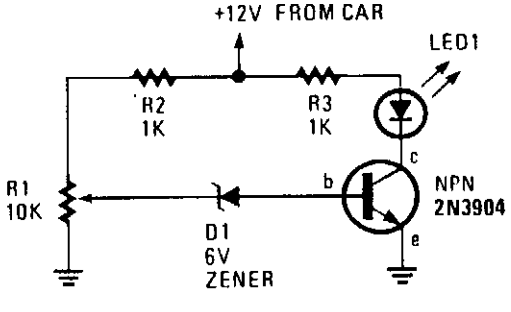

TAB BOOKS, INC.

Fig. 9-8

Circuit Notes

The circuit is quick and easy to put together and install, and tells you when battery voltage falls below the set limit as established by R1 (a 10,000-ohm potentiometer). It can indicate, via LED1, that the battery may be defective or in need of change if operating the starter causes the battery voltage to drop below the present limit.

10

Bridge Circuits

The sources of the following circuits are contained in the Sources section beginning on page 694. The figure number contained in the box of each circuit correlates to the source entry in the Sources section.

Ac Bridge
Bridge-Balance Indicator
Bridge Circuit
Typical Two Op Amp Bridge-Type Differential Amplifier
Low-Power Common Source Amplifier
Amplifier for Bridge Transducers
Strain Gage Bridge Signal Conditioner

AC BRIDGE

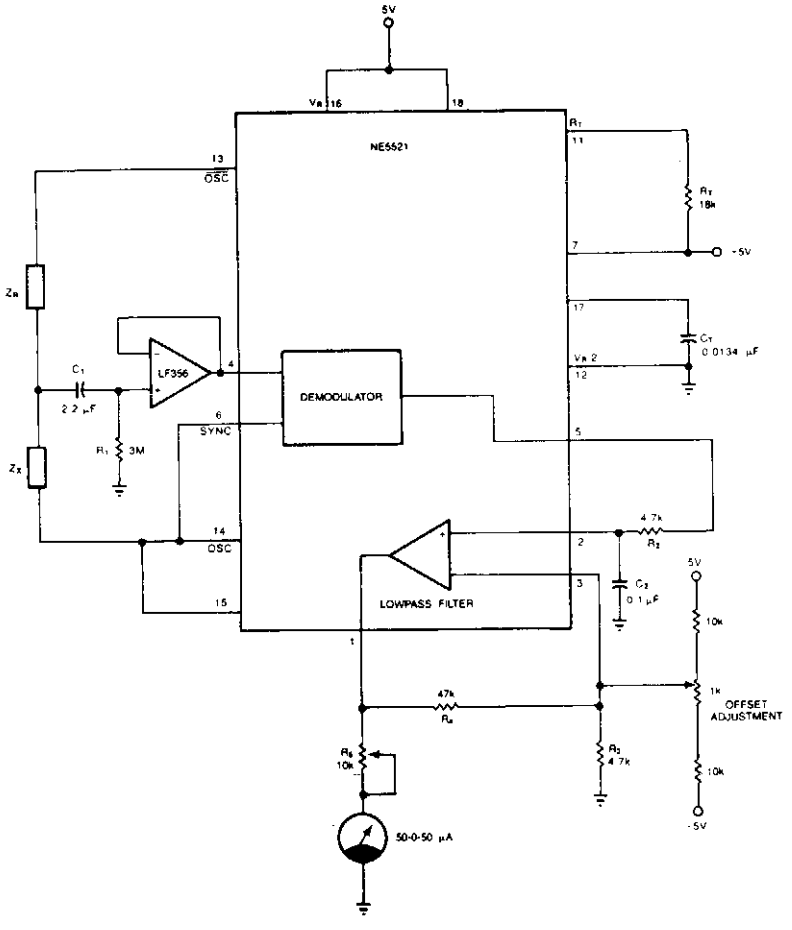

SIGNETICS

Fig. 10-1

Circuit Notes

The circuit provides a simple and cost-effective solution to matching resistors and capacitors. Impedances Z_R and Z_X form a half-bridge, while OSC and $\overline{OSC}$ excite the bridge differentially. The external op amp is a FET input amplifier (LF356) with very low input bias current on the order of 30 pA (typical). C1 allows ac coupling by blocking the dc common mode voltage from the bridge, while R1 biases the output of LF356 to 0 V at dc. Use of FET input op amp insures that dc offset due to bias current through R1 is negligible. Ac output of the demodulator is filtered via the uncommitted amp to provide dc voltage for the meter. The 10 k potentiometer, R5, limits the current into the meter to a safe level. Calibration begins by placing equal impedances at Z_R and Z_X, and the system offset is nulled by the offset adjust circuit so that Pin 1 is at 0 V. Next, known values are placed at Z_X and the meter deviations are calibrated. The bridge is now ready to measure an unknown impedance at Z_X with $\pm 0.05\%$ accuracy or better.

BRIDGE-BALANCE INDICATOR

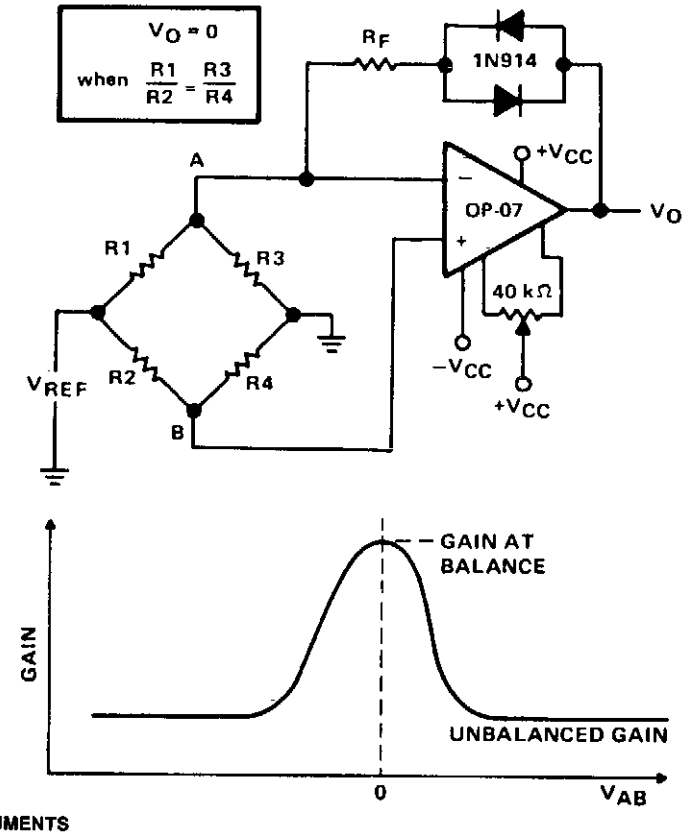

Fig. 10-2

TEXAS INSTRUMENTS

Circuit Notes

Indicator provides an accurate comparison of two voltages by indicating their degree of balance (or imbalance). Detecting small variations near the null point is difficult with the basic Wheatstone bridge alone. Amplification of voltage differences near the null point will improve circuit accuracy and ease of use.

The 1N914 diodes in the feedback loop result in high sensitivity near the point of balance (R1/R2 = R3/R4). When the bridge is unbalanced the amplifier's closed-loop gain is approximately R_F/r, where r is the parallel equivalent of R1 and R3. The resulting gain equation is $G = R_F(1/R1 + 1/R3)$. During an unbalanced condition the voltage at point A is different from that at point B. This difference voltage (V_{AB}), amplified by the gain factor G, appears as an output voltage, As the bridge approaches a balanced condition (R1/R2 = R3/R4), V_{AB} approaches zero. As V_{AB} approaches zero the 1N914 diodes in the feedback loop lose their forward bias and their resistance increases, causing the total feedback resistance to increase. This increases circuit gain and accuracy in detecting a balanced condition. The figure shows the effect of approaching balance on circuit gain. The visual indicator used at the output of the OP-07 could be a sensitive voltmeter or oscilloscope.

BRIDGE CIRCUIT

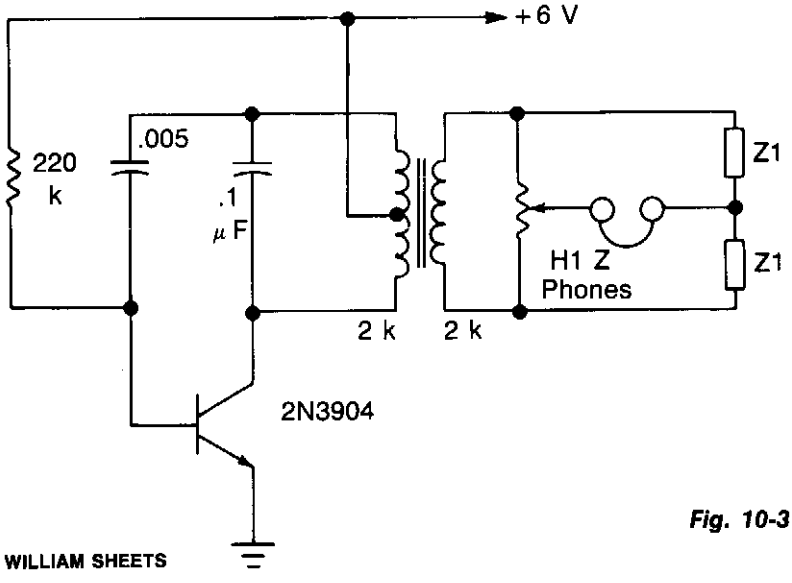

WILLIAM SHEETS

Fig. 10-3

Circuit Notes

The transistor is connected as an audio oscillator, using an audio transformer in the collector. The secondary goes to a linear pot. The ratio between the two parts of the pot from the slider is proportional to the values of Z1 and Z2 when no signal is heard in the phones.

TYPICAL TWO OP AMP BRIDGE-TYPE DIFFERENTIAL AMPLIFIER

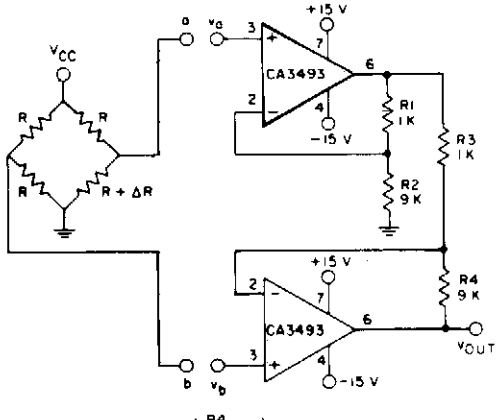

$V_{OUT} = V_b - V_a \left(\frac{R4}{R3} + 1\right)$

$A = \frac{V_{OUT}}{V_b - V_a} = \left(\frac{R4}{R3} + 1\right)$

FOR VALUES ABOVE $V_{OUT} = (V_b - V_a)(10)$

ALL RESISTANCE VALUES ARE IN OHMS

GENERAL ELECTRIC/RCA

Circuit Notes

Using a CA3493 BiMOS op amp to provide high input impedance and good common-mode rejection ratio (depends primarily on matching of resistor networks).

Fig. 10-4

LOW-POWER COMMON SOURCE AMPLIFIER

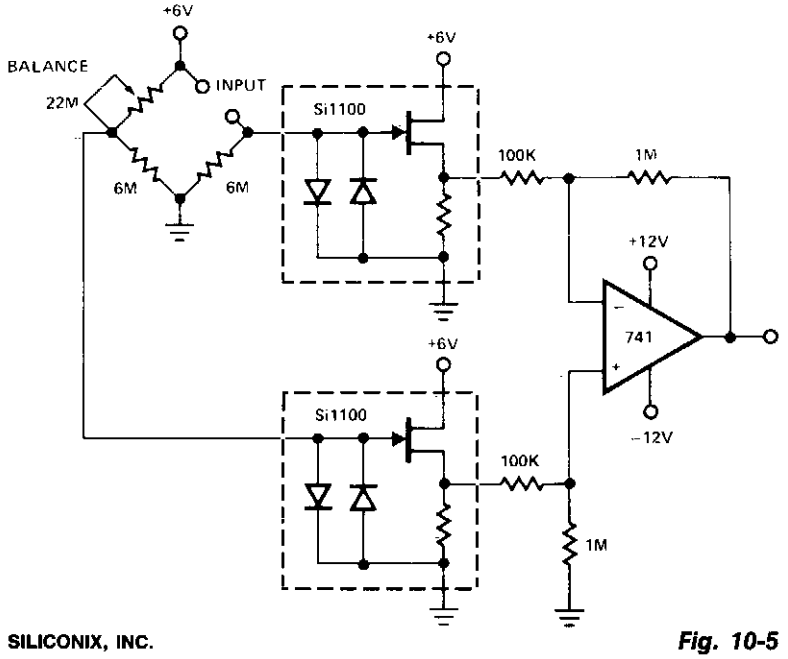

SILICONIX, INC.

Fig. 10-5

Circuit Notes

A circuit that will operate in the 10- to 20- microamp range at a 12-volt supply voltage. The diode protection is available in this configuration. The circuit voltage gain will be between 10 and 20, with extremely low power consumption (approximately 250 μW). This is very desirable for remote or battery operation where minimum maintenance is important.

AMPLIFIER FOR BRIDGE TRANSDUCERS

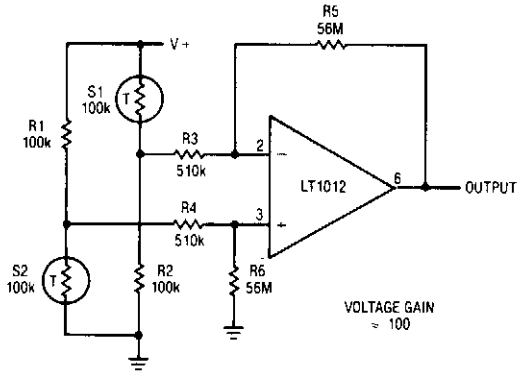

LINEAR TECHNOLOGY CORP.

Fig. 10-6

STRAIN GAUGE BRIDGE SIGNAL CONDITIONER

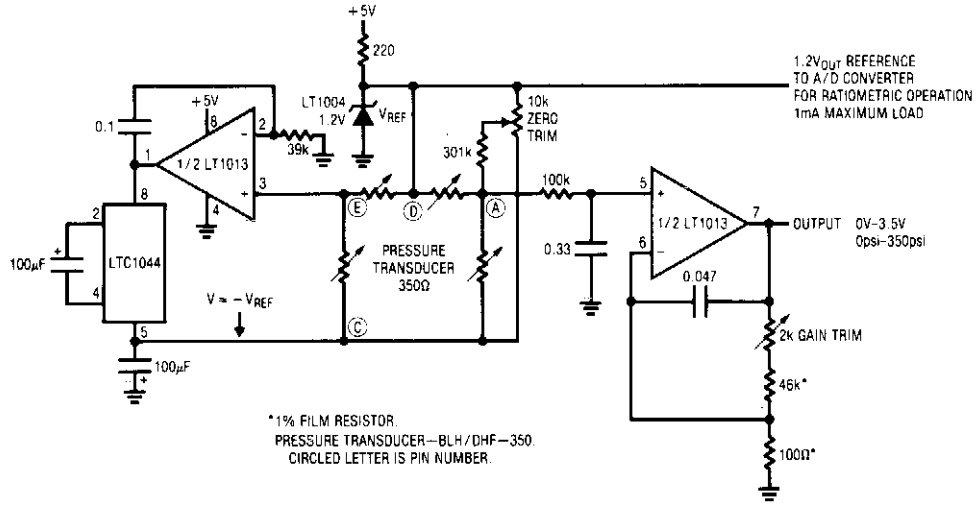

LINEAR TECHNOLOGY CORP.

Fig. 10-7

11

Burst Generators

The sources of the following circuits are contained in the Sources section beginning on page 694. The figure number contained in the box of each circuit correlates to the source entry in the Sources section.

Single-Tone Burst Generator
Square Waveform Multiburst Generator
Single-Timer IC Provides Square-Wave Tone Bursts
Strobe-Tone Burst Generator
Tone Burst Generator

SINGLE-TONE BURST GENERATOR

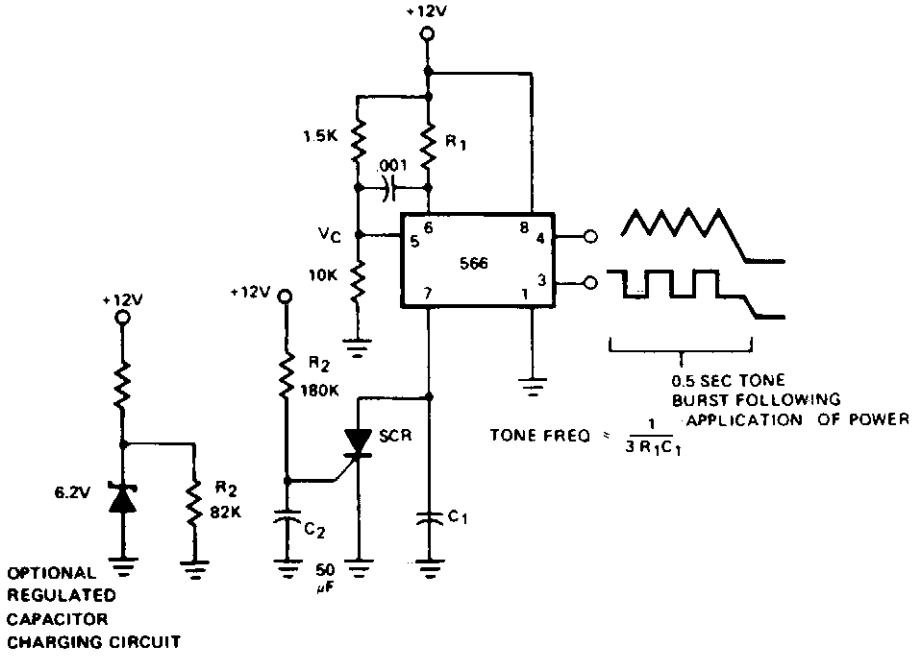

SIGNETICS

Fig. 11-1

Circuit Notes

The tone burst generator supplies a tone for one-half second after the power supply is activated; its intended use is a communications network alert signal. Cessation of the tone is accomplished at the SCR, which shunts the timing capacitor C1 charge current when activated. The SCR is gated on when C2 charges up to the gate voltage which occurs in 0.5 seconds. Since only 70 μA are available for triggering, the SCR must be sensitive enough to trigger at this level. The triggering current can be increased, of course, by reducing R2 (and increasing C2 to keep the same time constant). If the tone duration must be constant under widely varying supply voltage conditions, the optional Zener diode regulator circuit can be added, along with the new value for R_2 $R_2' = 82\ k\Omega$. If the SCR is replaced by an npn transistor, the tone can be switched on and off at will at the transistor base terminal.

SQUARE WAVEFORM MULTIBURST GENERATOR

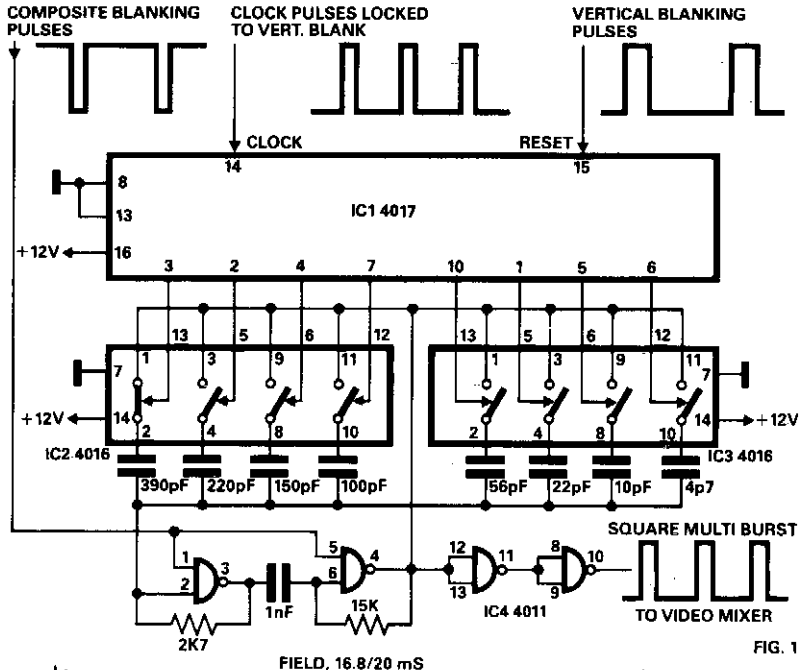

FIG. 1

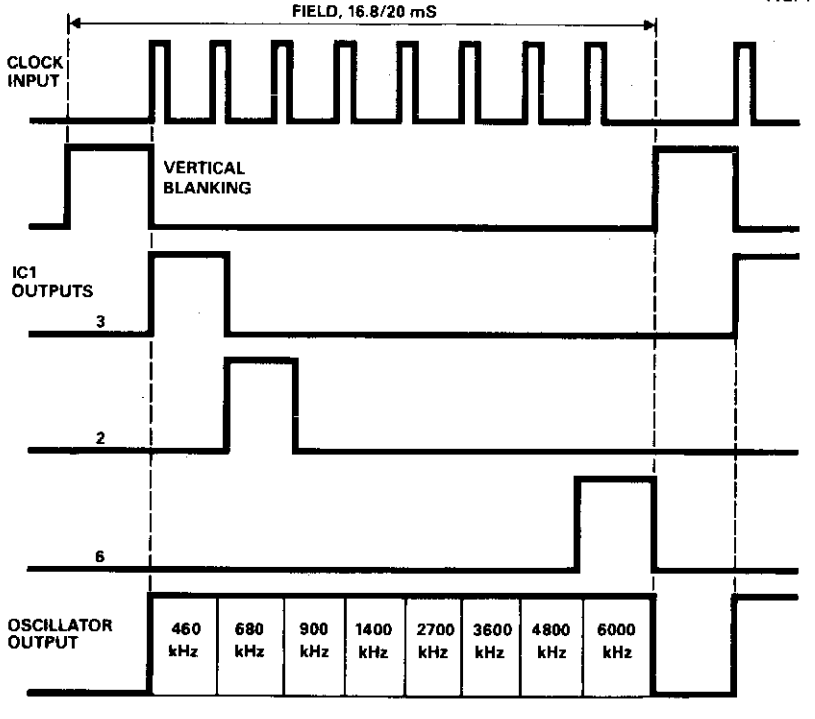

ELECTRONIC ENGINEERING

Fig. 11-2

SQUARE WAVEFORM MULTIBURST GENERATOR, Continued.

Circuit Notes

The generator described here is intended for multiburst signal square waveform generation and can be used as a device for characterizing the response of TV monitor amplifiers as shown. The circuit is an RC oscillator with NAND gates (IC4-4011), with its capacitor C changed periodically by means of bilateral switches (IC2, IC3-4016). The control inputs of bilateral switches are driven by the outputs of a counter/decoder (IC1-4017) the operation of which is determined by generated clock pulses, so that they occur eight times at half-picture (field). These pulses are locked to vertical blank pulses.

Horizontal synchronization is achieved by means of composite blanking pulses (negative polarization) applied to pins 1 and 5 of IC4. The oscillator frequency changes in the following discrete steps: 460 kHz, 680 kHz, 900 kHz, 1400 kHz, 2700 kHz, 3600 kHz, for the time of one frame. The video signal is fed on a mixer where it is superimposed with a composite sync signal.

SINGLE-TIMER IC PROVIDES SQUARE-WAVE TONE BURSTS

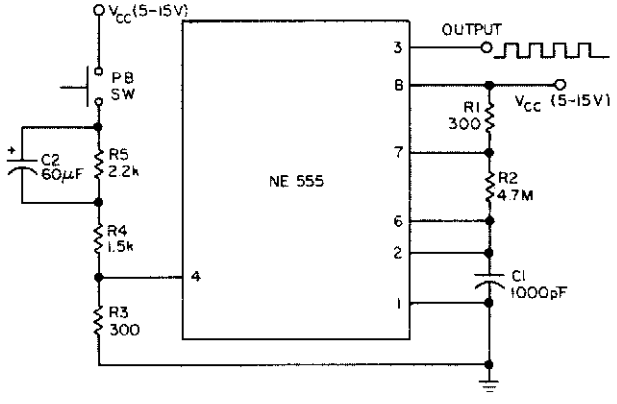

ELECTRONIC DESIGN

Fig. 11-3

Circuit Notes

The tone-burst generator gives a 50-ms burst of 1.5 kHz square waves with each operation of the pushbutton and can source or sink 200 mA.

STROBE-TONE BURST GENERATOR

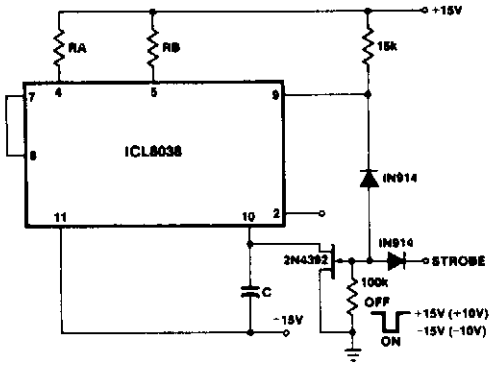

Fig. 11-4

INTERSIL

TONE BURST GENERATOR

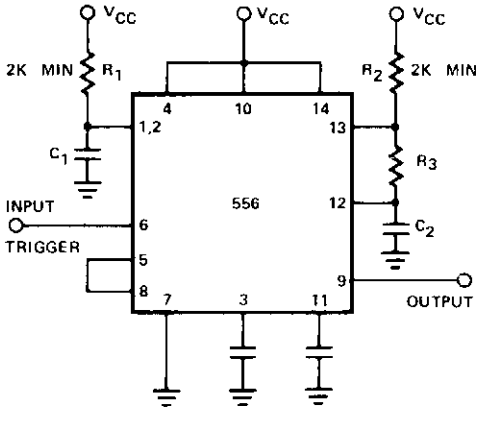

Circuit Notes

The dual timer makes an excellent tone burst generator. The first half is connected as a one shot and the second half as an oscillator. The pulse established by the one shot turns on the oscillator allowing a burst of pulses to be generated.

SIGNETICS

Fig. 11-5

12

Capacitance Meters

The sources of the following circuits are contained in the Sources section beginning on page 694. The figure number contained in the box of each circuit correlates to the source entry in the Sources section.

Capacitance-to-Voltage Meter
Accurate Digital Capacitance Meter

CAPACITANCE-TO-VOLTAGE METER

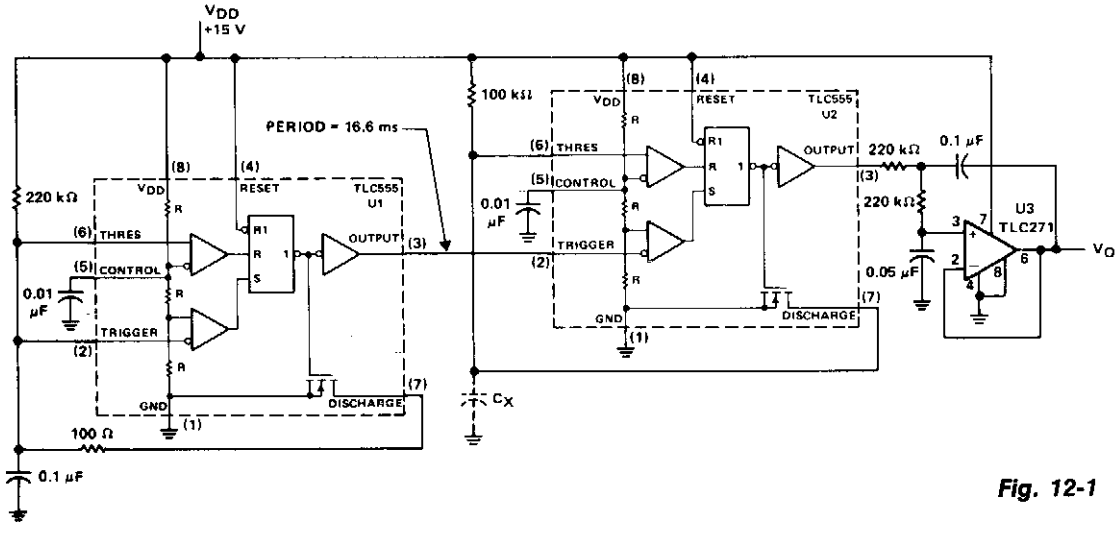

Fig. 12-1

TEXAS INSTRUMENTS

Circuit Notes

Timer U1 operates as a free-running oscillator at 60 Hz, providing trigger pulses to timer U2 which operates in the monostable mode. Resistor R1 is fixed and capacitor Cx is the capacitor being measured. While the output of U2 is 60 Hz, the duty cycle depends on the value of Cx. U3 is a combination low-pass filter and unity-gain follower whose dc voltage output is the time-averaged amplitude of the output pulses of U2, as shown in the timing diagram.

The diagram shows when the value of Cx is small the duty cycle is relatively low. The output pulses are narrow and produce a lower average dc voltage level at the output of U3. As the capacitance value of Cx increases, the duty cycle increases making the output pulses at U2 wider and the average dc level output at U3 increases. The graph illustrates capacitance values of 0.01 μF to 0.1 μF plotted against the output voltage of U3. Notice the excellent linearity and direct one-to-one scale calibration of the meter. If this does not occur the 100 k ohm resistor, R1, can be replaced with a potentiometer which can be adjusted to the proper value for the meter being used.

CAPACITANCE-TO-VOLTAGE METER (CONT'D)

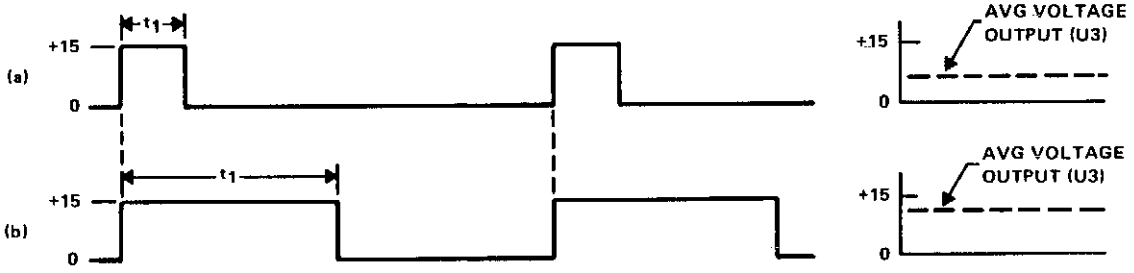

U2 Duty Cycle Change

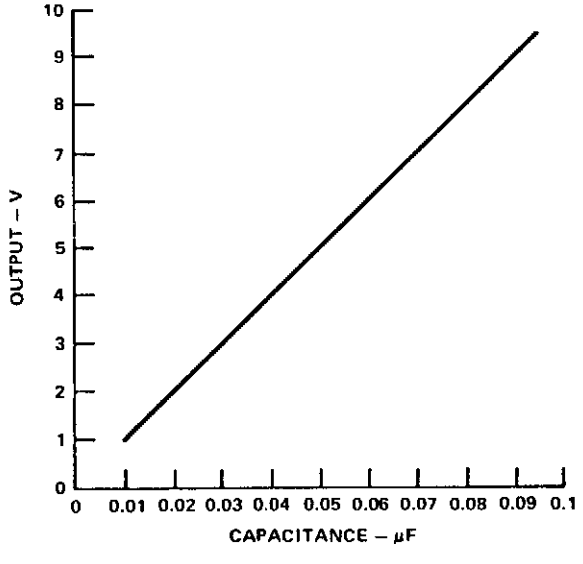

TEXAS INSTRUMENTS

Fig. 12-1

ACCURATE DIGITAL CAPACITANCE METER

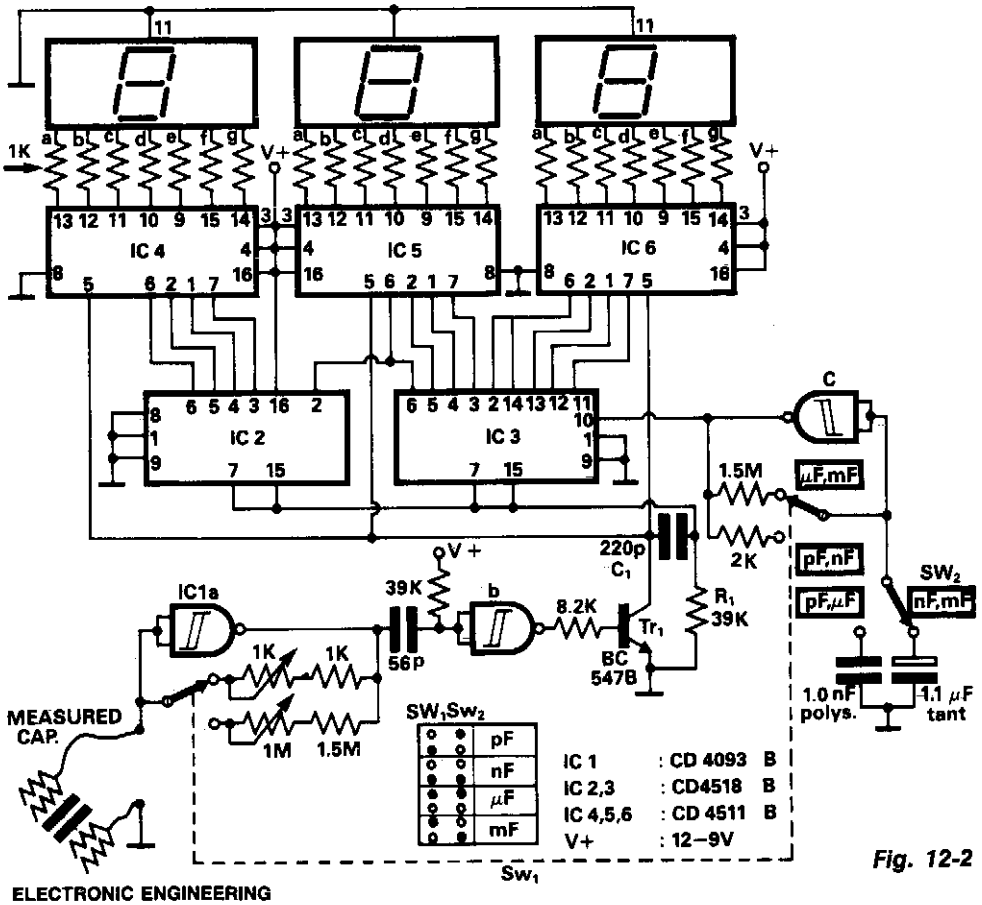

Fig. 12-2

ELECTRONIC ENGINEERING

Circuit Notes

The principle of operation is counting the pulse number derived from a constant frequency oscillator during a fixed time interval produced by another lower frequency oscillator. This oscillator uses the capacitor being measured as the timing. The capacitance measurement is proportional during pulse counting during a fixed time interval. The astable oscillator formed by IC1c produces a pulse train of constant frequency. Gate IC1a also forms an oscillator whose oscillation period is given approximately by the equation: $T = 0.7\ RC$.

Period T is linearly dependent on the capacitance C. This period is used as the time interval for one measurement. The differentiator network following the oscillator creates the negative spikes shaped in narrow pulses by IC1b NAND Schmitt Trigger. The differentiator formed by R1 and C1 produces a negative spike which resets the counters. The display shows the number of high frequency oscillator pulses entering the counter during the measurement period.

13

Circuit Protection Circuits

The sources of the following circuits are contained in the Sources section beginning on page 694. The figure number contained in the box of each circuit correlates to the source entry in the Sources section.

Overvoltage Protector
High Speed Electronic Circuit Breaker
12 ns Circuit Breaker
Low Voltage Power Disconnector
Automatic Power-Down Protection Circuit
Line Dropout Detector
Electronic Crowbar

OVERVOLTAGE PROTECTOR

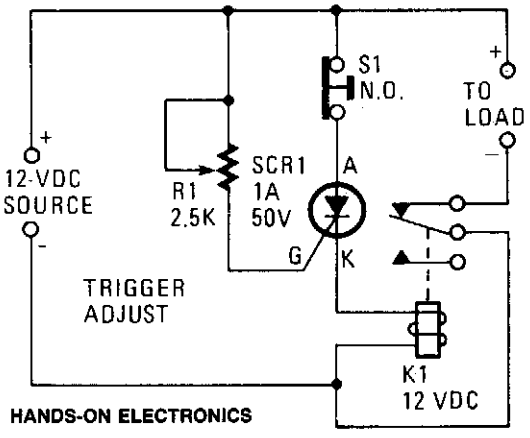

Fig. 13-1

Circuit Notes

A silicon-controlled rectifier is installed in parallel with the 12-V line and connected to a normally-closed 12-V relay, K1. The SCR's gate circuit is used to sample the applied voltage. As long as the applied voltage stays below a given value, SCR1 remains off and K1's contacts remain closed, thereby supplying power to the load. When the source voltage rises above 12 V, sufficient current is applied to the gate of SCR1 to trigger it into conduction. The trigger point of SCR1 is dependent on the setting of R1. Once SCR1 is triggered (activating the relay), K1's contacts open, halting current flow to the load.

HIGH SPEED ELECTRONIC CIRCUIT BREAKER

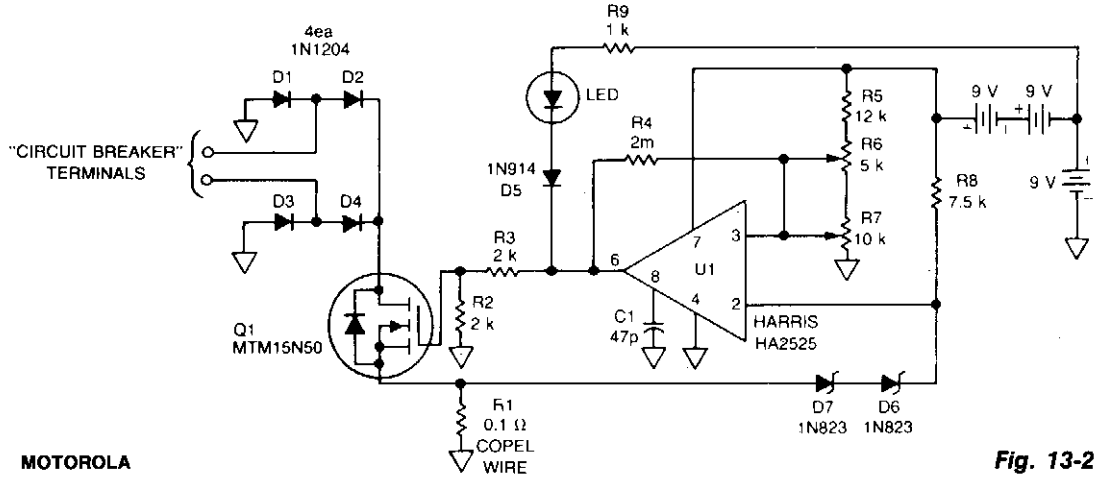

Fig. 13-2

Circuit Notes

This 115 Vac, electronic circuit breaker uses the low drive power, low on resistance and fast turn off of the TMOS MTM15N50. The trip point is adjustable, LED fault indication is provided and battery power provides complete circuit isolation.

The two "circuit breaker" terminals are across one leg of a full wave diode bridge consisting of D1–D4. Normally, Q1 is turned ON so that the circuit breaker looks like a very low resistance. One input to comparator U1 is a fraction of the internal battery voltage and the other input is the drop across zeners D6 and D7 and the voltage drop across R1. If excessive current is drawn, the voltage drop across R1 increases beyond the comparator threshold (determined by the setting of R6), U1 output goes low, Q1 turns OFF, and the circuit breaker "opens." When this occurs, the LED fault indicator is illuminated.

12 ns CIRCUIT BREAKER

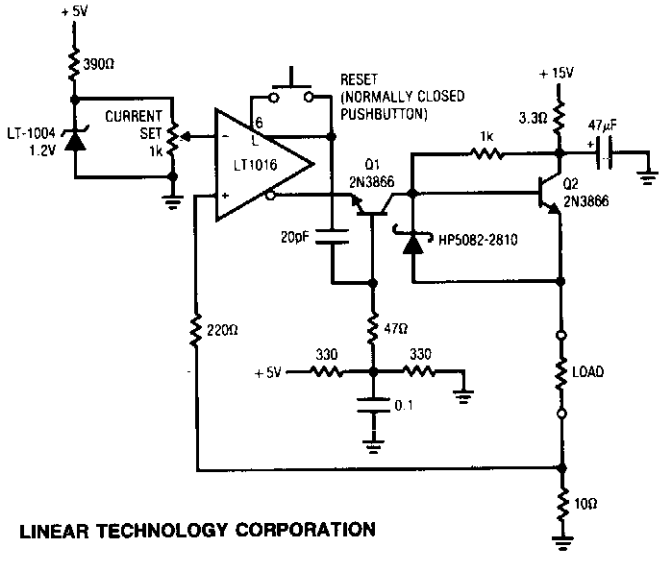

LINEAR TECHNOLOGY CORPORATION

Fig. 13-3

Circuit Notes

This circuit will turn off current in a load 12 ns after it exceeds a preset value. Under normal conditions the voltage across the 10 ohm shunt is smaller than the potential at the LT1016's negative input. This keeps Q1 off and Q2 receives bias, driving the load. When an overload occurs the current through the 10 ohm sense resistor begins to increase. When this current exceeds the preset value, the LT1016's outputs reverse. This provides ideal turn-on drive for Q1 and it cuts off Q2 in 5 ns. The delay from the onset of excessive load current to complete shutdown is just 13 ns. Once the circuit has triggered, the LT1016 is held in its latched state by feedback from the non-inverting output. When the load fault has been cleared the pushbutton can be used to reset the circuit.

LOW VOLTAGE POWER DISCONNECTOR

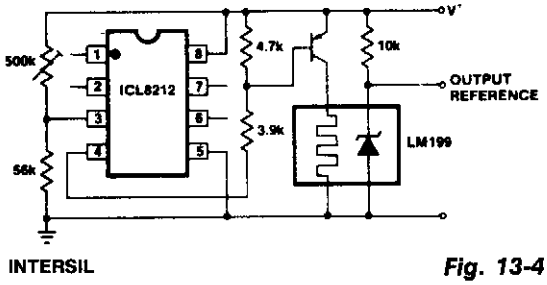

INTERSIL

Fig. 13-4

Circuit Notes

There are some classes of circuits that require the power supply to be disconnected if the power supply voltage falls below a certain value. As an example, the National LM199 precision reference has an on chip heater which malfunctions with supply voltages below 9 volts causing an excessive device temperature. The ICL8212 can be used to detect a power supply voltage of 9 volts and turn the power supply off to the LM199 heater section below that voltage.

AUTOMATIC POWER-DOWN PROTECTION CIRCUIT

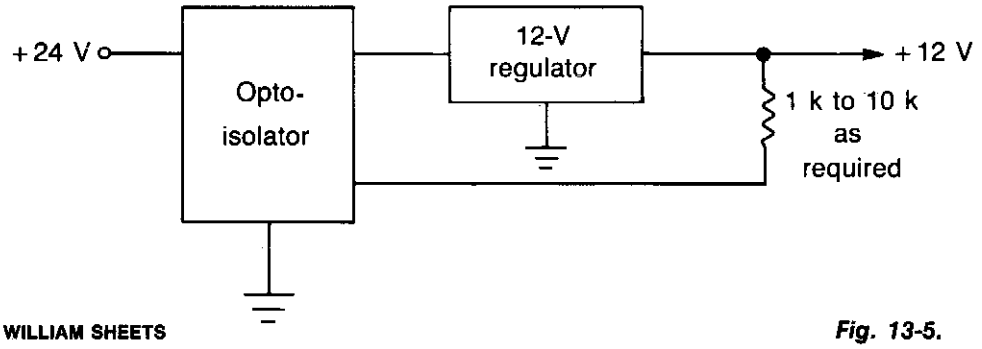

WILLIAM SHEETS

Fig. 13-5.

Circuit Notes

This circuit is faster than a fuse and automatically resets itself when a short is removed. The normal regulated dc input line is opened and the phototransistor of the opto isolator is connected in series with the source and regulator. Between the output of the regulator and ground is a LED and an associated current-limiting resistor, placed physically close to the surface of the photosensitive device. As long as the regulator is delivering its rated output, the LED glows and causes the photo device to have a low resistance. Full current is thus allowed to flow. If a short circuit occurs on the output side of the regulator, the LED goes dark, the resistance of the photo device increases, and the regulator shuts off. When the short is removed, the LED glows, and the regulator resumes operation.

LINE DROPOUT DETECTOR

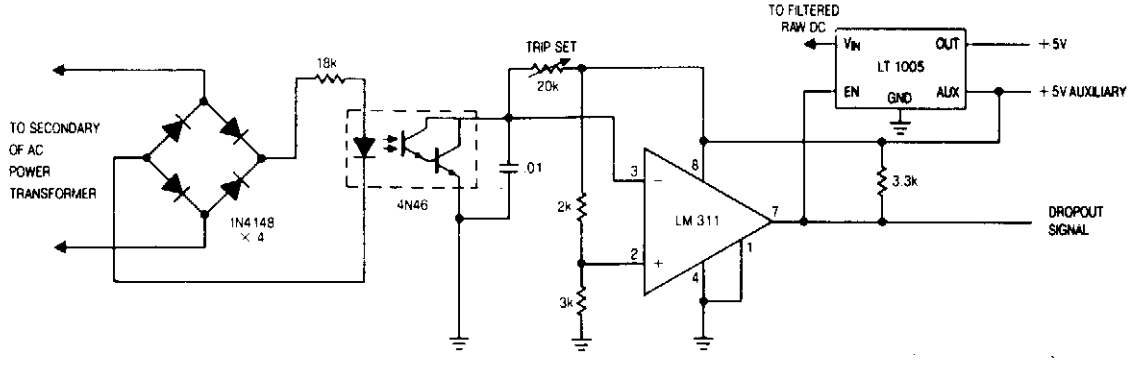

LINEAR TECHNOLOGY CORP.

Fig. 13-6

ELECTRONIC CROWBAR

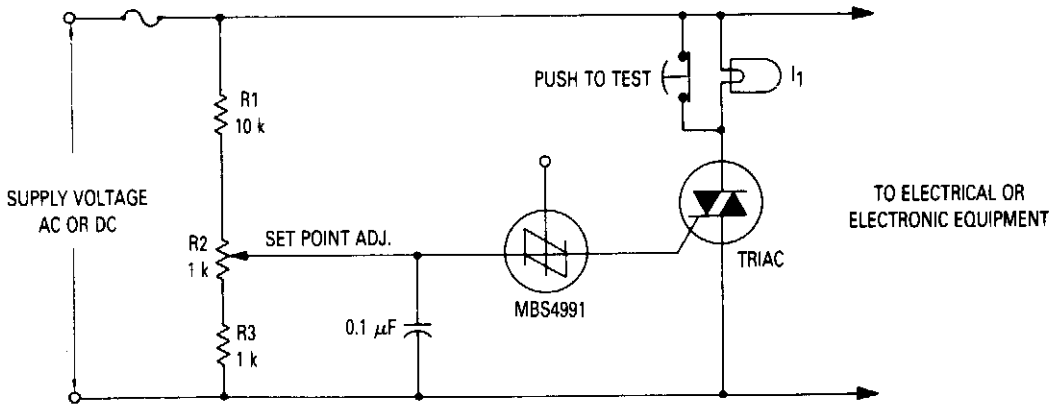

MOTOROLA

Fig. 13-7

Circuit Notes

Where it is desirable to shut down equipment rather than allow it to operate on excessive supply voltage, an electronic "crowbar" circuit can be employed to quickly place a short-circuit across the power lines, thereby dropping the voltage across the protected device to near zero and blowing a fuse. Since the TRIAC and SBS are both bilateral devices, the circuit is equally useful on ac or dc supply lines. With the values shown for R1, R2 and R3, the crowbar operating point can be adjusted over the range of 60 to 120 volts dc or 42 to 84 volts ac. The resistor values can be changed to cover a different range of supply voltages. The voltage rating of the TRIAC must be greater than the highest operating point as set by R2. I_1 is a low power incandescent lamp with a voltage rating equal to the supply voltage. It may be used to check the set point and operation of the unit by opening the test switch and adjusting the input or set point to fire the SBS.

14

Clock Circuits

The sources of the following circuits are contained in the Sources section beginning on page 694. The figure number contained in the box of each circuit correlates to the source entry in the Sources section.

Three Phase Clock From a Reference Clock
60 Hz Clock Pulse Generator

THREE PHASE CLOCK FROM A REFERENCE CLOCK

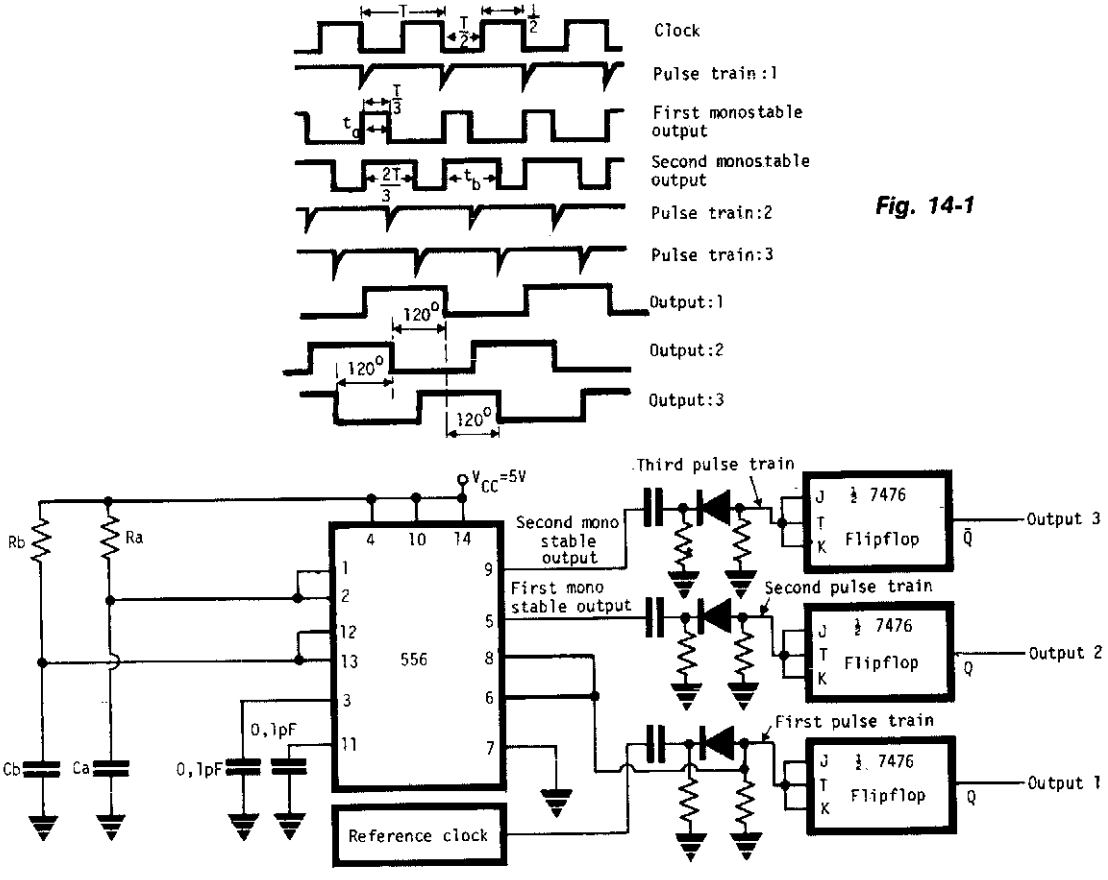

Fig. 14-1

ELECTRONIC ENGINEERING

Circuit Notes

The circuit provides three square wave outputs with 120° of phase difference between each other. Reference clock frequency is twice that of the required frequency. This can be obtained from a crystal oscillator with a chain of dividers or by using LM 555 in 50% duty cycle astable mode. If 1/T is the frequency of the reference clock, the dual timer 556 is connected to give two mono-stable output pulses of duration T/3 and 2T/3. The first timer R and C value are adjusted so that t_a = 1.1RaCa = T/3 and the second timer R and C values so that t_b = 1.1RbCb = 2T/3. For triggering the two monostables a negative pulse train (1st) is derived from the reference clock with a differentiator and a clipper combination as shown. The three pulse trains trigger three JK flip flops giving three phase square wave outputs.

60 Hz CLOCK PULSE GENERATOR

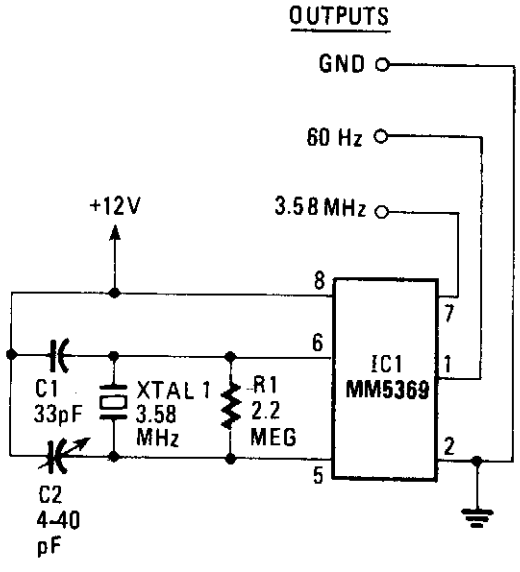

HANDS-ON ELECTRONICS

Fig. 14-2

Circuit Notes

The circuit provides a clean, stable square wave and it will operate on anywhere from 6 to 15 volts. The IC and color-burst crystal are the kind used in TV receivers. The 3.58 MHz output makes a handy marker signal for shortwave bands.

15

Comparators

The sources of the following circuits are contained in the Sources section beginning on page 694. The figure number contained in the box of each circuit correlates to the source entry in the Sources section.

Low-Power Comparator with Less than 10 μV Hysteresis
Voltage Monitor/Comparator
Limit Comparator
Double-Ended Limit Comparator
Low-Cost Comparator and Display
Window Comparator
Comparator Detects Power Supply Overvoltages, Catches Glitches
High-Low Level Comparator with One Op Amp
High-Input-Impedance Window Comparator
Frequency Comparator
Demonstration Comparator Circuit
LED Frequency Comparator
TTL-Compatible Schmitt Trigger

LOW-POWER COMPARATOR WITH LESS THAN 10 μV HYSTERESIS

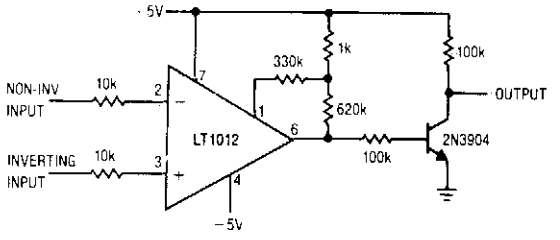

Fig. 15-1

LINEAR TECHNOLOGY CORP.

VOLTAGE MONITOR/COMPARATOR

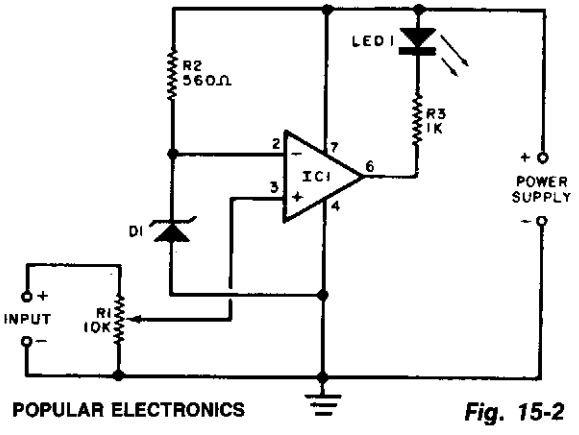

POPULAR ELECTRONICS

Fig. 15-2

Circuit Notes

A portion of the monitored voltage (determined by R1's adjustment) is compared to a fixed voltage obtained from a zener reference network, R2-D1. As long as the monitored voltage remains at or above its present monitor point (determined by R1's setting), the output indicator, LED1, remains dark. If the voltage drops below this level, the LED goes on. D1 is a 3.3-V zener. A 12 Vdc power supply is suitable for monitoring input voltages of up to 12 volts.

LIMIT COMPARATOR

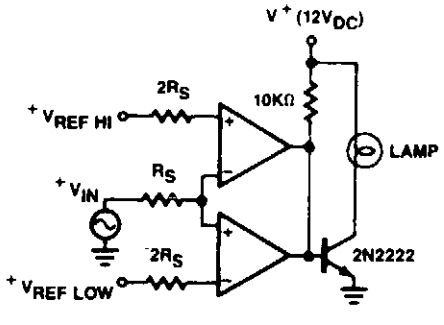

Fig. 15-3

SIGNETICS

DOUBLE-ENDED LIMIT COMPARATOR

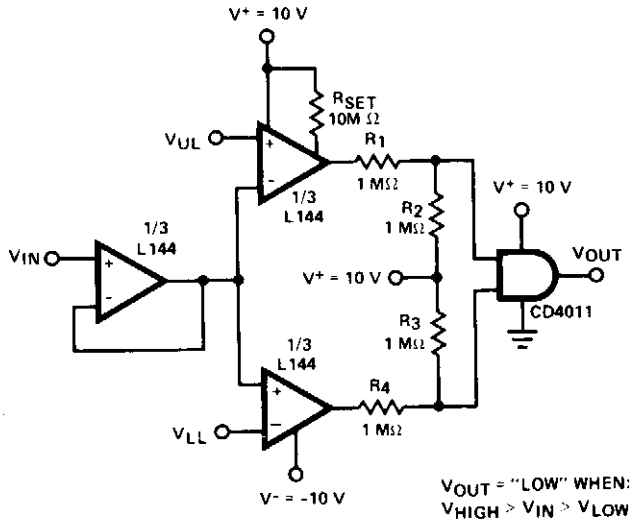

Fig. 15-4

SILICONIX P_D = 290 μW

LOW-COST COMPARATOR AND DISPLAY

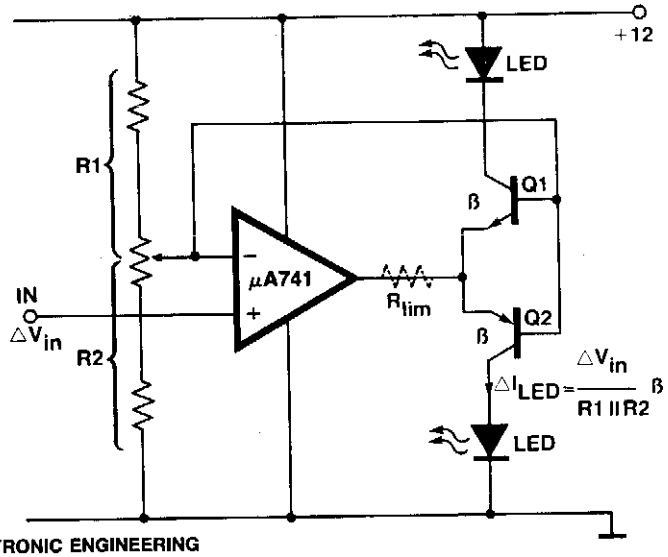

Fig. 15-5

ELECTRONIC ENGINEERING

Circuit Notes

An op amp is used as a comparator and a sink for LED current. The output voltage of the amplifier changes about 1.4 V depending on the direction of the current. Only one transistor is on at any time. Maximum LED current is limited to 25 mA by overcurrent protection of the uA741. If LEDs are not capable of carrying such a current or an alternative op amp is used and an additional resistor R_{lim} is necessary.

WINDOW COMPARATOR

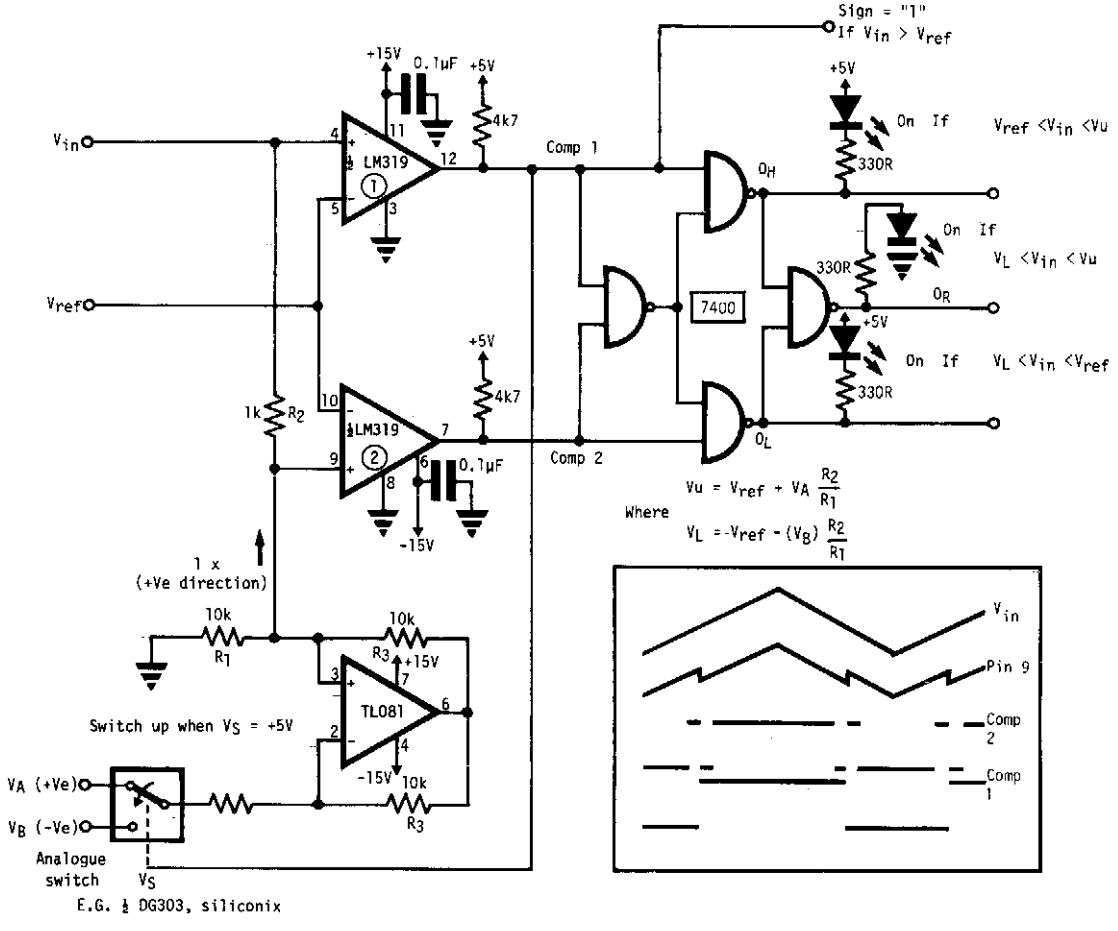

Fig. 15-6

ELECTRONIC ENGINEERING

Circuit Notes

This circuit provides independently adjustable upper and lower threshold settings, and has sign, in window range, in upper window, and in lower window digital outputs.

COMPARATOR DETECTS POWER SUPPLY OVERVOLTAGES, CATCHES GLITCHES

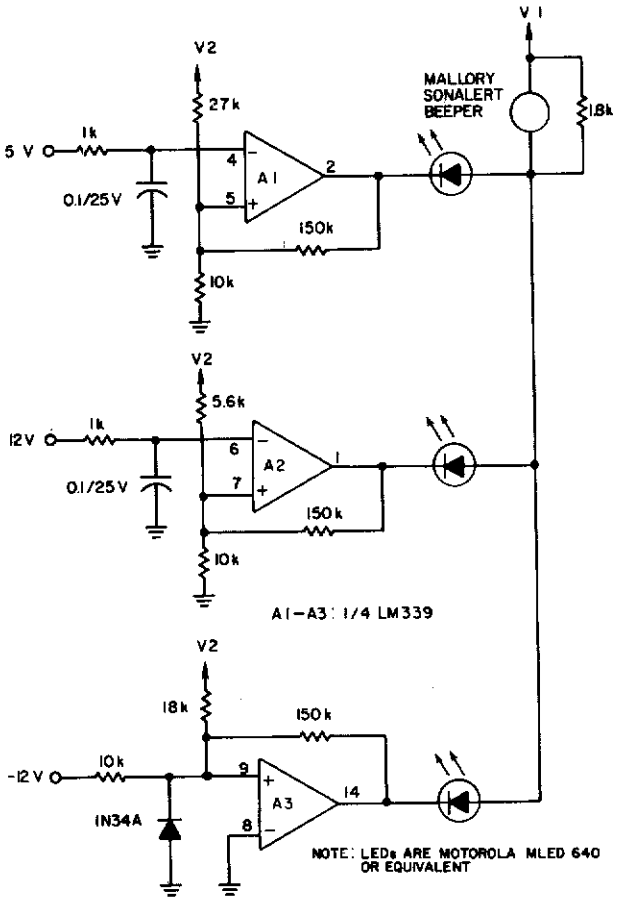

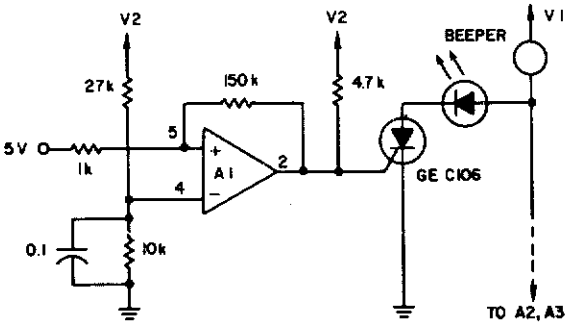

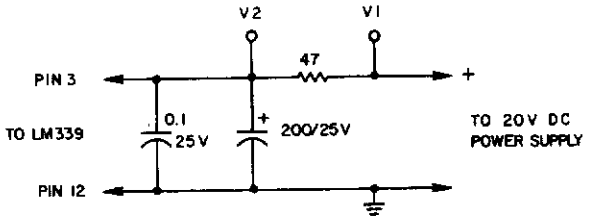

ALL RESISTORS 1/4 W 5%

Fig. 15-7.

ELECTRONIC DESIGN

Circuit Notes

(A) To maintain an alarm condition when an overvoltage transient disappears, add an SCR to the comparator circuits. For SCR operation, voltages to the comparator inputs are inverted. (B) The triple-voltage monitoring circuit detects transient power-supply overvoltages. If excessive voltage momentarily appears at the 5, 12 and −12 V inputs, the LED for that circuit lights and the beeper sounds for as long as the overvoltage lasts.

HIGH-LOW LEVEL COMPARATOR WITH ONE OP AMP

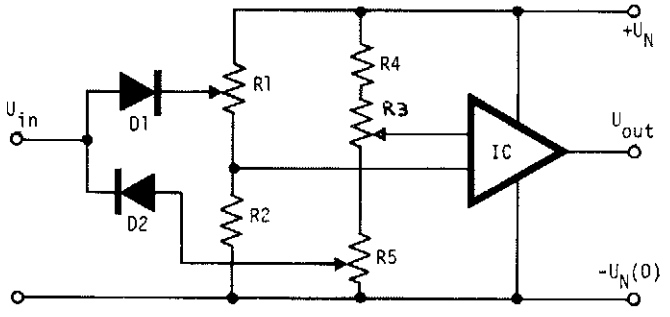

Fig. 15-8

ELECTRONIC ENGINEERING

Circuit Notes

The voltage to be compared is fed through diode D1 and D2 to the voltage dividers R1 and R5 where the low and high limits are present. When the voltage level of an input signal exceeds the high threshold limit set with potentiometer R1, the diode D1 becomes forward biased and the increased voltage on the inputs of the op amp drives it into positive saturation. Similarly, a decrease of the input voltage at the op amp inputs turns the op amp to positive saturation. Potentiometer R3 is used for zeroing the op amp in the off state.

HIGH-INPUT-IMPEDANCE WINDOW COMPARATOR

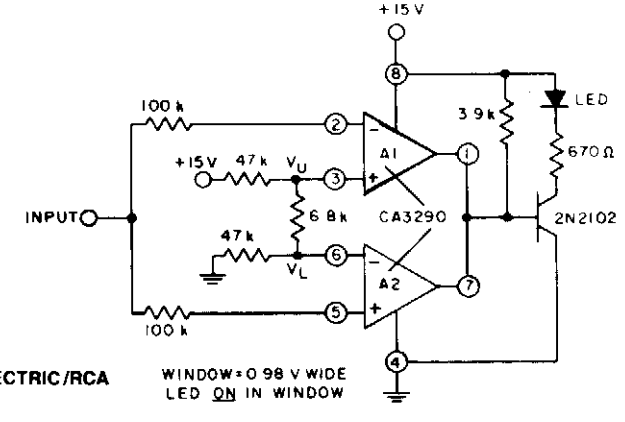

Fig. 15-9

GENERAL ELECTRIC/RCA

WINDOW=0.98 V WIDE
LED ON IN WINDOW

Circuit Notes

The circuit uses both halves of the CA3290 BiMOS dual voltage comparator. The LED will be turned "ON" whenever the input signal is above the lower limit (V_L) but below the upper limit (V_U).

FREQUENCY COMPARATOR

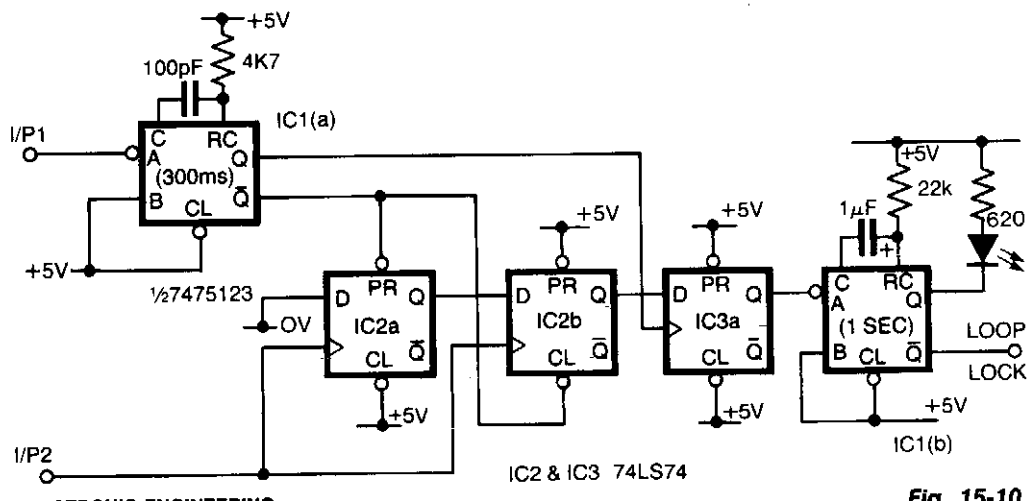

ELECTRONIC ENGINEERING

Fig. 15-10

Circuit Notes

Input 1 is used as a gating period, during which a single rising edge on input 2 will cause a logic 1 output-any other number, indicating non-identical frequencies causes a logic 0 output.

IC1a converts input 1 to a narrow pulse which initializes IC2 which forms a two-stage shift register clocked by input 2. On the first edge of input 2 a logic 1 appears on the output of IC2b and for all subsequent inputs a logic 0 is present. At the end of the gating period this output is latched by IC3 forming the lock output. As this is only valid for one input period a monostable is added to the output to enable, for example, visual monitoring of the output. Either output from IC3 can be used depending on which state is most important. As connected the failure state is indicated.

DEMONSTRATION COMPARATOR CIRCUIT

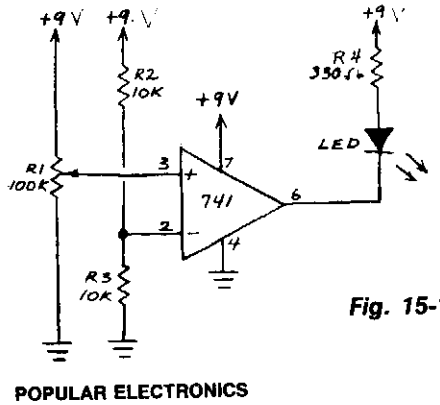

Fig. 15-11

POPULAR ELECTRONICS

Circuit Notes

This circuit is an op amp without a feedback resistor. R2 and R3 junction point sets the reference voltage. When the input voltage set by R1 is below the reference voltage the LED glows. If voltage is above reference, the LED goes off.

LED FREQUENCY COMPARATOR

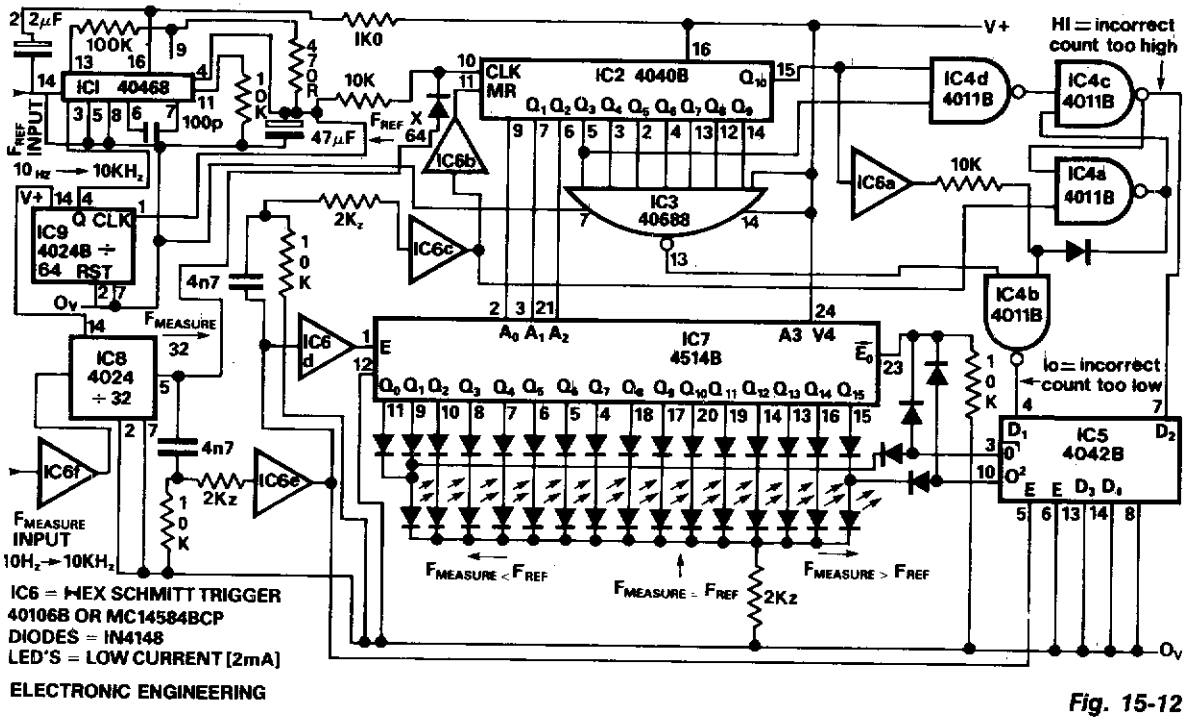

Fig. 15-12

Circuit Notes

The circuit provides unambiguous LED + or − bar readout with steps of 0.1%. The reference frequency is multiplied by the PLLIC1 and divider IC9 to output 64 × F (ref) and this is then gated by dividing F (measure) by 32 in IC8 thus is F (ref) = (measure) then IC2 counts 1024 pulses. Should the count be more than 1031 than the latch IC4c/IC4a is set to indicate count too high (F (measure) F (ref)) and if the count is less than 1017 then IC3/IC4b indicate count too low (F (measure) F (ref). These signals are latched by IC5 at the end of each period by the latch signal from IC6e.

When the two frequencies are within + or − 0.6% the LSB's of the counter IC2 are decoded and latched by IC7 and displayed on LED's IC6c resets the counter after latching the data.

TTL-COMPATIBLE SCHMITT TRIGGER

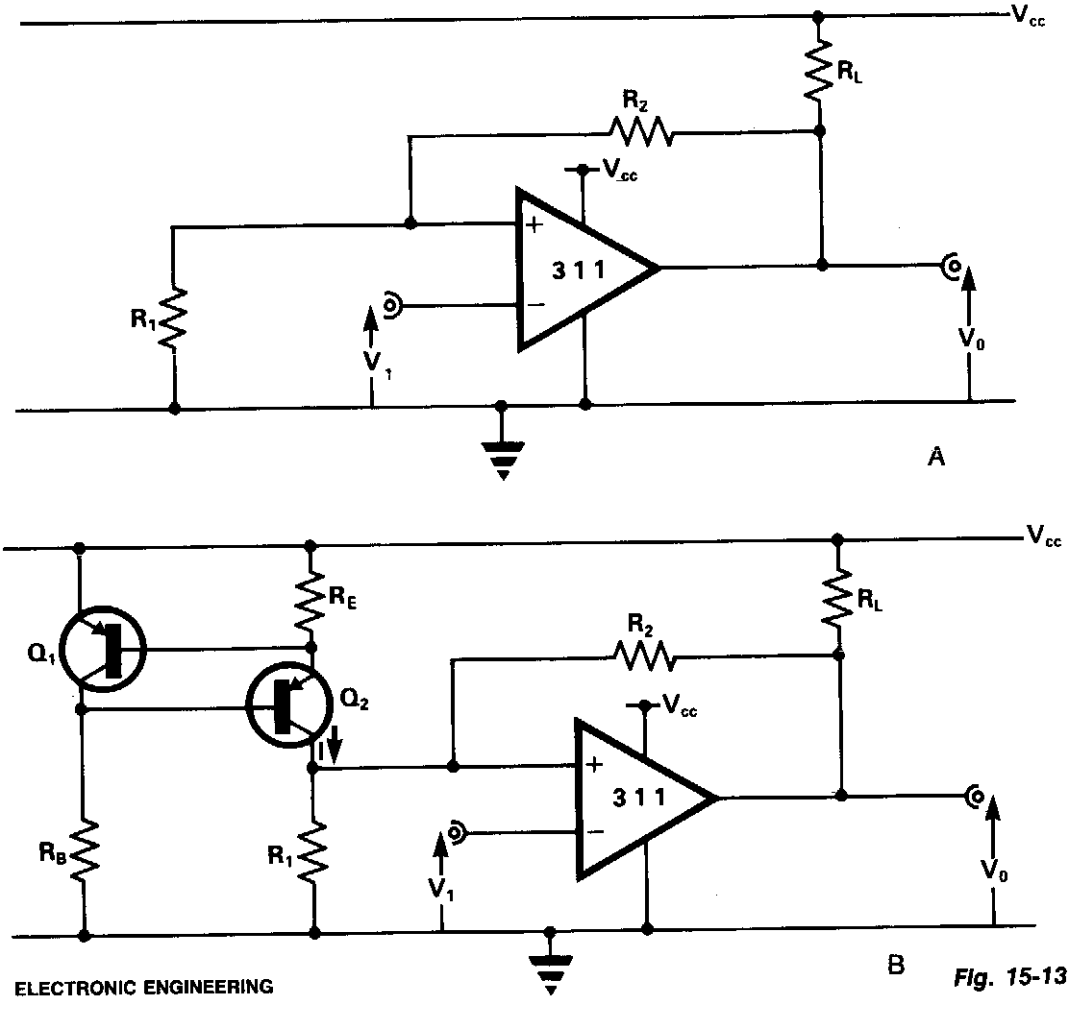

ELECTRONIC ENGINEERING

Fig. 15-13

Circuit Notes

The comparator has an output pull-up resistor R_L and is connected up to operate as a Schmitt trigger using the single rail supply V_{CC}. The feedback resistors R1 and R2 give upper and lower threshold levels V_{T+}, VVV_{TW}, respectively. V_{T+} is easily set by suitable resistor selection but there is little independent choice of V_{T-} because V_{T-} cannot exceed $V_{CE(SAT)}$. In Fig. 15-13B current-source, comprising the transistors R_E, R_B produces a current I ~: (V_{EB}/R_E), V_{EB} (~ 0.65 V) being the emitter-base voltage of Q1 and Q2. Fig. 15-13C shows the results of a practical test using the circuit of Fig. 15-13B, and the following operating and component data:

V_{CC} = 5 V; R_L = 1 K ohm; R_1 = R_2 = 10 K ohm;
R_B = 3.6 K ohm; R_E = 1 K ohm + 10 K ohm pot;
Q_1 = ZTX500; Q_2 = ZTX500.

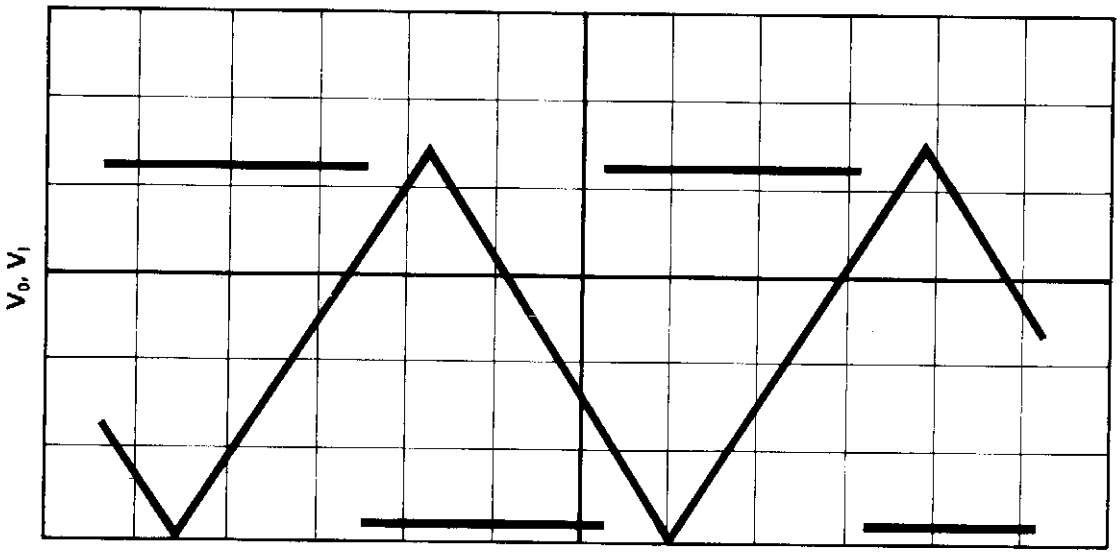

Fig. 15-13 Continued

C

16

Computer Circuits

The sources of the following circuits are contained in the Sources section beginning on page 694. The figure number contained in the box of each circuit correlates to the source entry in the Sources section.

8-Bit μP Bus Interface
V_{PP} Generator for Eproms
Eight Channel Mux/Demux System
Microprocessor Selected Pulse Width Control
8048/IM80C48 Microcomputer with 8-Character 16-Segment ASCII Triplex Liquid Crystal Display
CMOS Data Acquisition System
High Speed Data Acquisition System
Buffered Breakout Box
Z80 Clock
Data Separator for Floppy Disks

8-BIT μP BUS INTERFACE

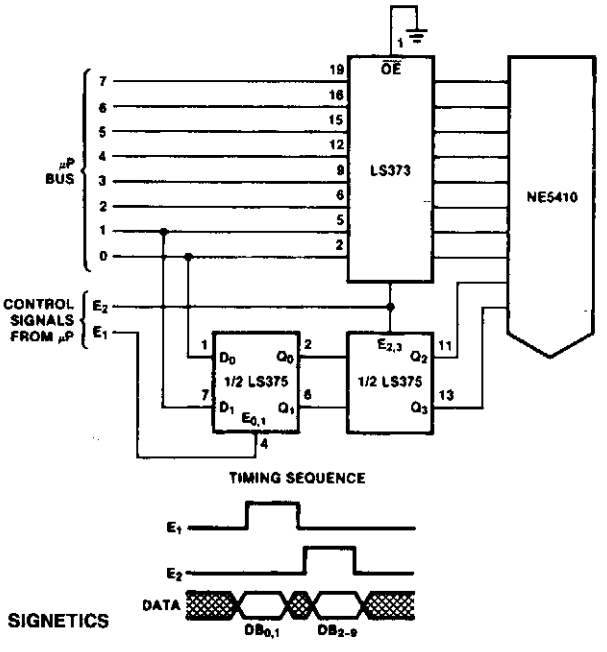

Fig. 16-1

Circuit Notes

With this double latch technique, valid data will be latched to the DAC until updated with the E_2 pulse. Timing will depend on the processor used.

V_{PP} GENERATOR FOR EPROMS

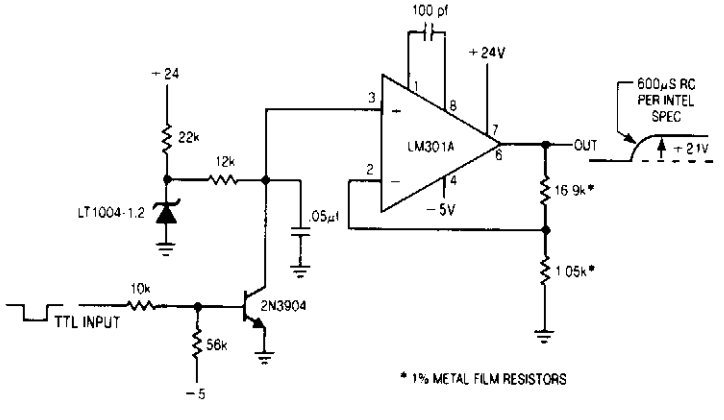

LINEAR TECHNOLOGY CORP.

Fig. 16-2

EIGHT-CHANNEL MUX/DEMUX SYSTEM

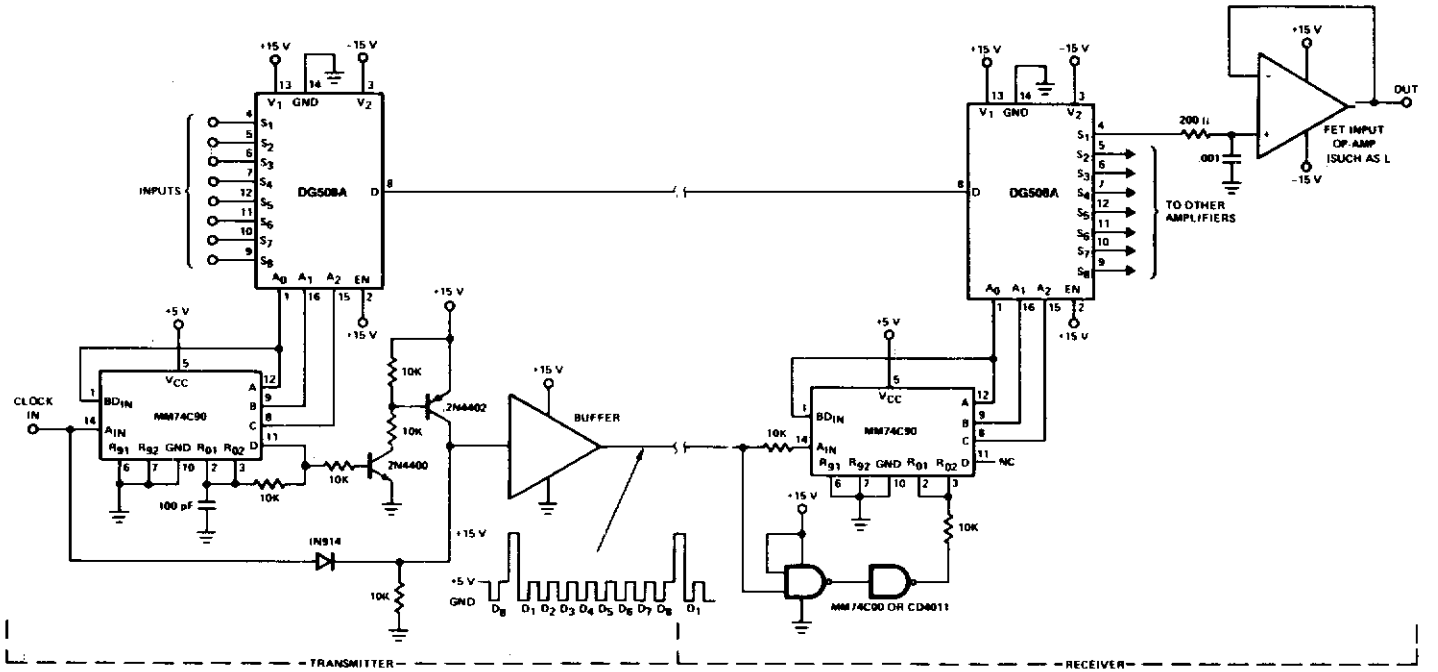

SILICONIX

Fig. 16-3

Circuit Notes

A number of signals may be sent between two points simultaneously by making a slight modification in the receiver circuit. A second DG508A is used as a demultiplexer, allowing all 8 channels to be monitored continuously.

MICROPROCESSOR SELECTED PULSE WIDTH CONTROL

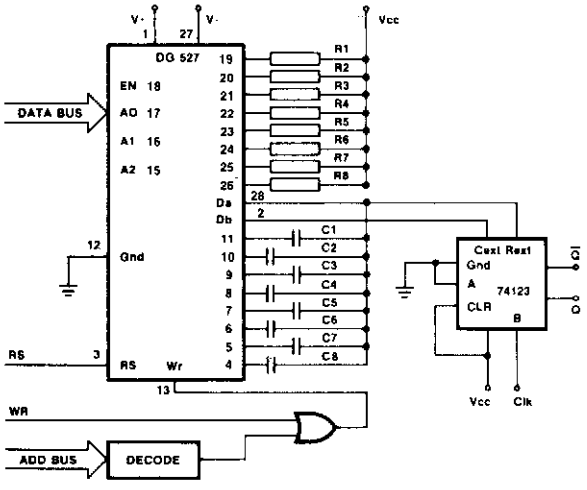

SILICONIX

Fig. 16-4

Circuit Notes

Differential multiplexers are generally used in process control applications to eliminate errors due to common mode signals. In this circuit however, advantage is taken of the dual multiplexing capability of the switch. This is achieved by using the multiplexer to select pairs of RC networks to control the pulse width of the multivibrator. This can be a particularly useful feature in process control applications where there is a requirement for a variable width sample "window" for different control signals.

8048/IM80C48 MICROCOMPUTER WITH 8-CHARACTER 16-SEGMENT ASCII TRIPLEX LIQUID CRYSTAL DISPLAY

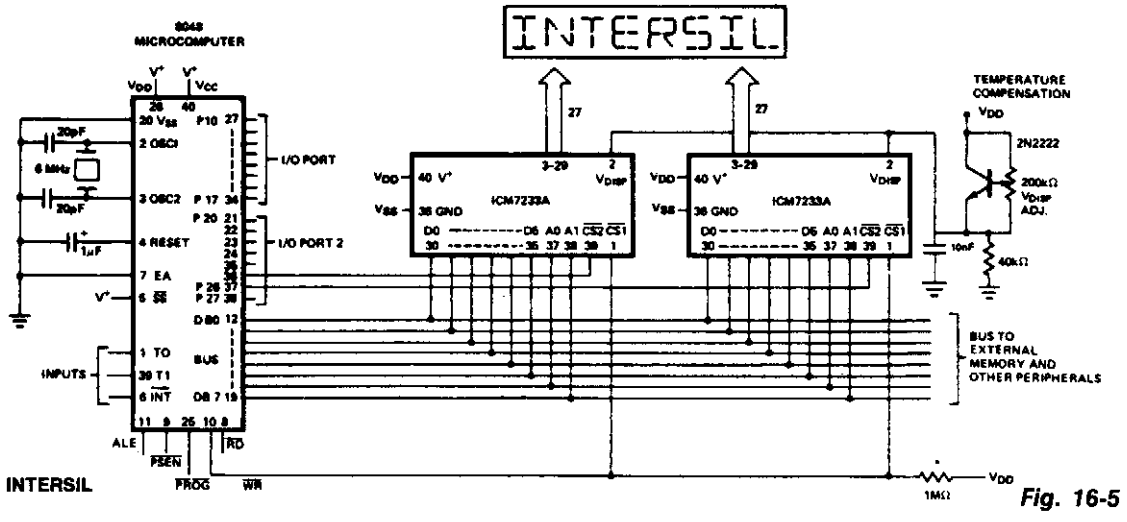

INTERSIL

Fig. 16-5

Circuit Notes

The two bit character address is merged with the data and written to the display driver under the control of the WR line. Port lines are used to either select the target driver, or deselect all of them for other bus operations.

CMOS DATA ACQUISITION SYSTEM

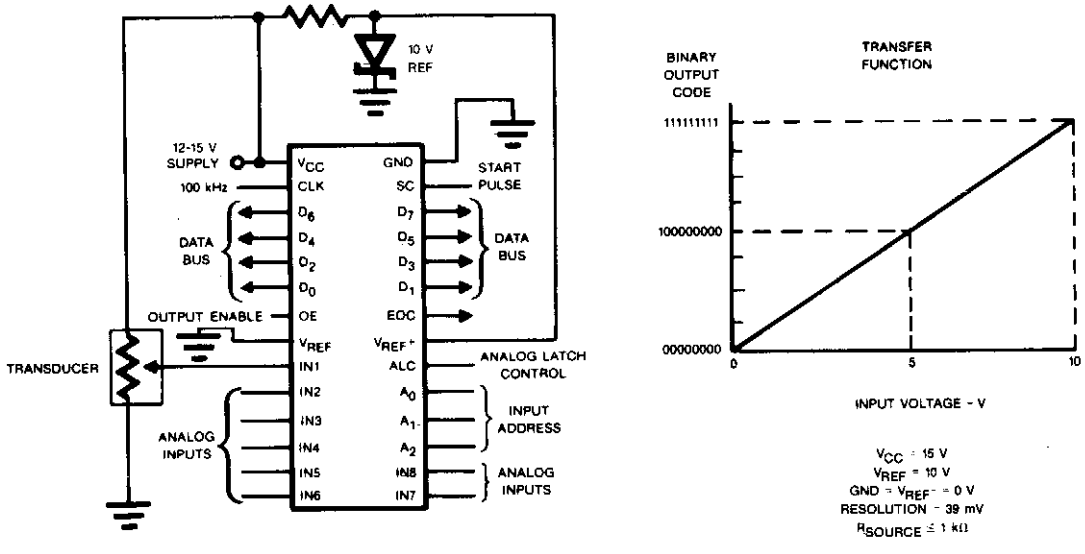

Fig. 16-6

SILICONIX

Circuit Notes

Charge redistribution to achieve A/D conversion. In typical applications, as a ratiometric conversion system for a microprocessor, V_{REF-} will be connected to ground and V_{REF+} will be connected to V_{CC}. The output will then be a simple proportional ratio between analog input voltage and V_{CC}. The general relationship is:

$$\frac{D_{OUT}}{2^8} = \frac{V_{IN}}{V_{REF+} - V_{REF-}}$$

Where D_{OUT} = Digital Output
V_{IN} = Analog Input
V_{REF} = Positive Reference Potential
V_{REF} = Negative Reference Potential

HIGH SPEED DATA ACQUISITION SYSTEM

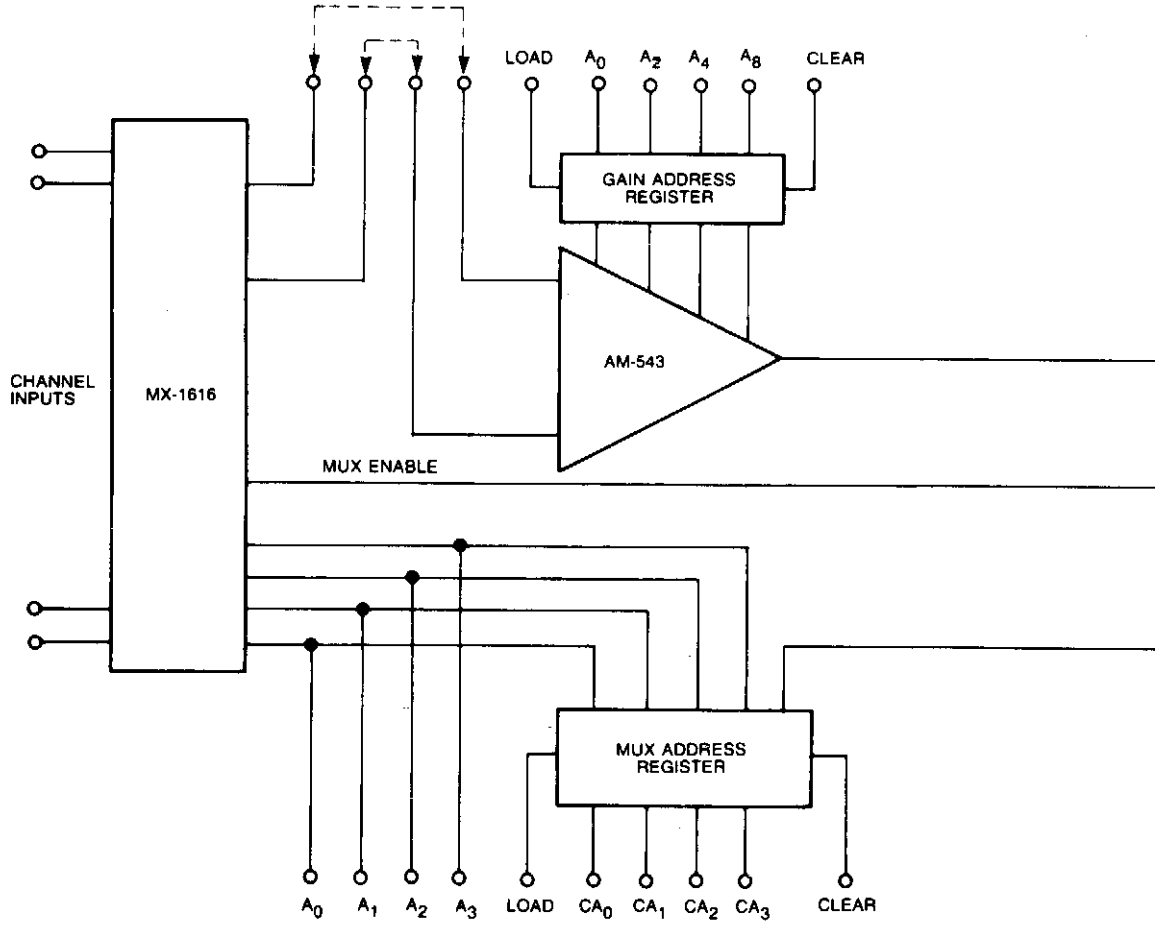

Fig. 16-7

Circuit Notes

This diagram shows a high-speed data acquisition system with 8 differential inputs and 12-bit resolution using the AM-543. If the control logic is timed so that the Sample-Hold-ADC section is converting one analog value while the mux-amplifier section is allowed to settle to the next input value, throughout rates greater than 156 KHz can be achieved. The AM-543 is used with Datel's ADV-817, a 12-bit hybrid A/D with a 2 μsec conversion rate, the SHM-6, a 0.01%, 1 μsec hybrid Sample-Hold, and the MX-1616,

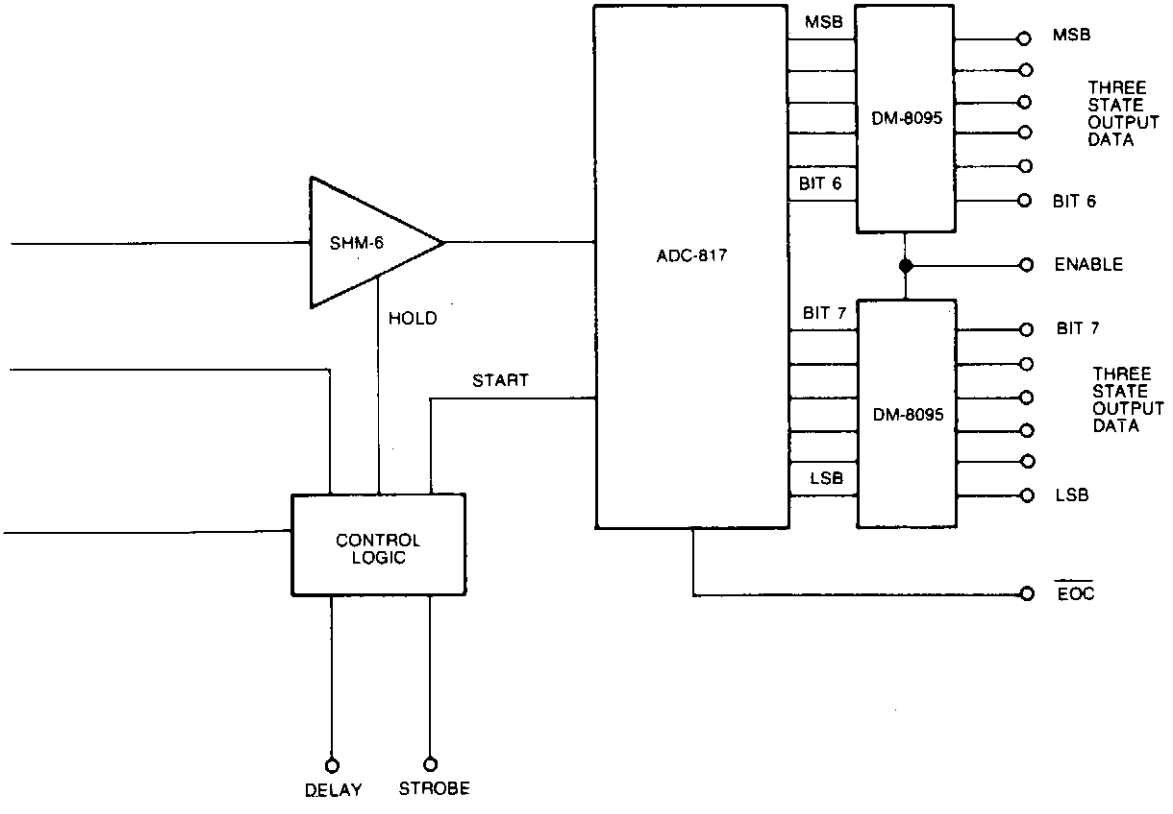

a low cost, high-speed monolithic analog multiplexer. The system works as follows:

The μP selects a channel and initiates a conversion at G=1 and then looks at the MSB of the conversion result. If the MSB = 1, the μP will store the value. If the MSB = O, the μP will select G = 2. The μP will repeat the cycle of gain incrementing, comparison, and analog-to-digital conversion until the MSB = 1. The μP will then test for an output of all 1's, as this is the full-scale output of the A/D. If the output is all 1's, the μP will decrement the gain by 1 step and perform the final conversion.

BUFFERED BREAKOUT BOX

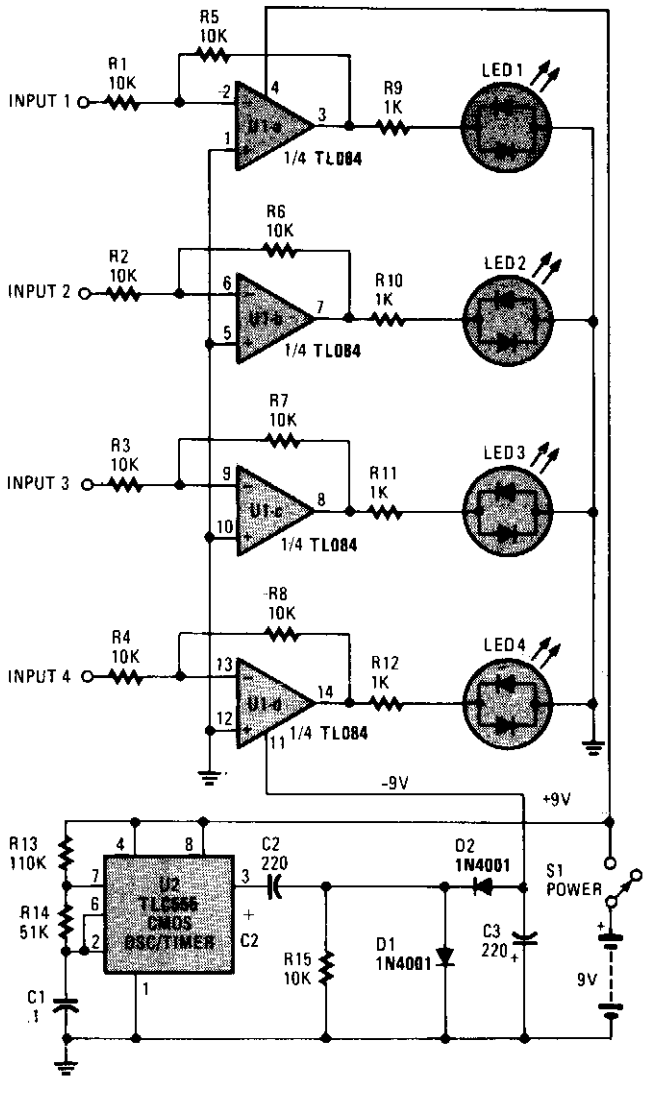

HANDS-ON ELECTRONICS

Fig. 16-8

Circuit Notes

The monitoring circuit consists of four tri-color LEDs driven by an equal number of op amps configured as gain-of-one inverting amplifiers. Each LED is wired in the circuit so that it glows red when the input to the op amp is high, and green when the input is low. The LED remains off when the input is disconnected from a circuit, when it's at ground potential, and when it's connected to a 3-state output that's in the high-impedance state. Each input has an impedance of 10,000 ohms preventing the circuit

BUFFERED BREAKOUT BOX, Continued.

from loading communication lines. The op amp requires both positive and negative supply voltages to properly drive the LEDs. Both voltages are supplied by a single, nine-volt battery. The battery supplies the positive source directly. The negative source is supplied via a CMOS 555 oscillator/timer that's configured as an astable oscillator, which is used to drive a standard diode/capacitor voltage doubler. When the 555 is connected to the monitoring circuit, the output voltage is not 18 volts (2 × 9), but a little under nine volts, due to loading. The circuit draws about 16 mA with all LEDs off; with all four on, it draws between 20 and 30 mA, depending on how many LEDs are high, and how many are low. The use of CMOS op amps reduces quiescent current drain considerably.

Z80 CLOCK

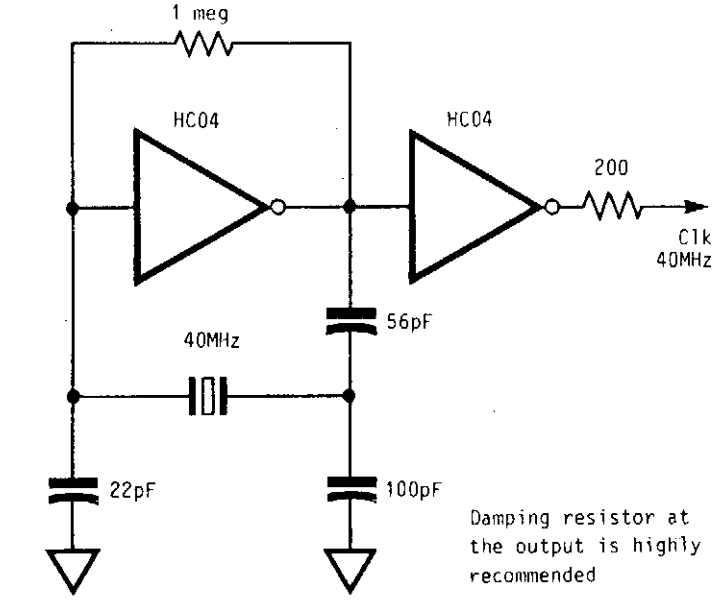

ELECTRONIC ENGINEERING

Fig. 16-9

Circuit Notes

The circuit will operate reliably from below 1 MHz to above 400 MHz. With V_{CC} = 5 V the output of the second inverter essentially attains a full swing from 0 V to 5 V. Such large logic output levels and broad frequency range capabilities make this oscillator quite suitable for driving MOS components such as CPU, controller chip, peripheral devices, as well as other TTL products. A damping resistor in series between the clock output of the oscillator and the input of the device being driven will remove the undesirable undershoot and ringing caused by the high speed CMOS part.

DATA SEPARATOR FOR FLOPPY DISKS

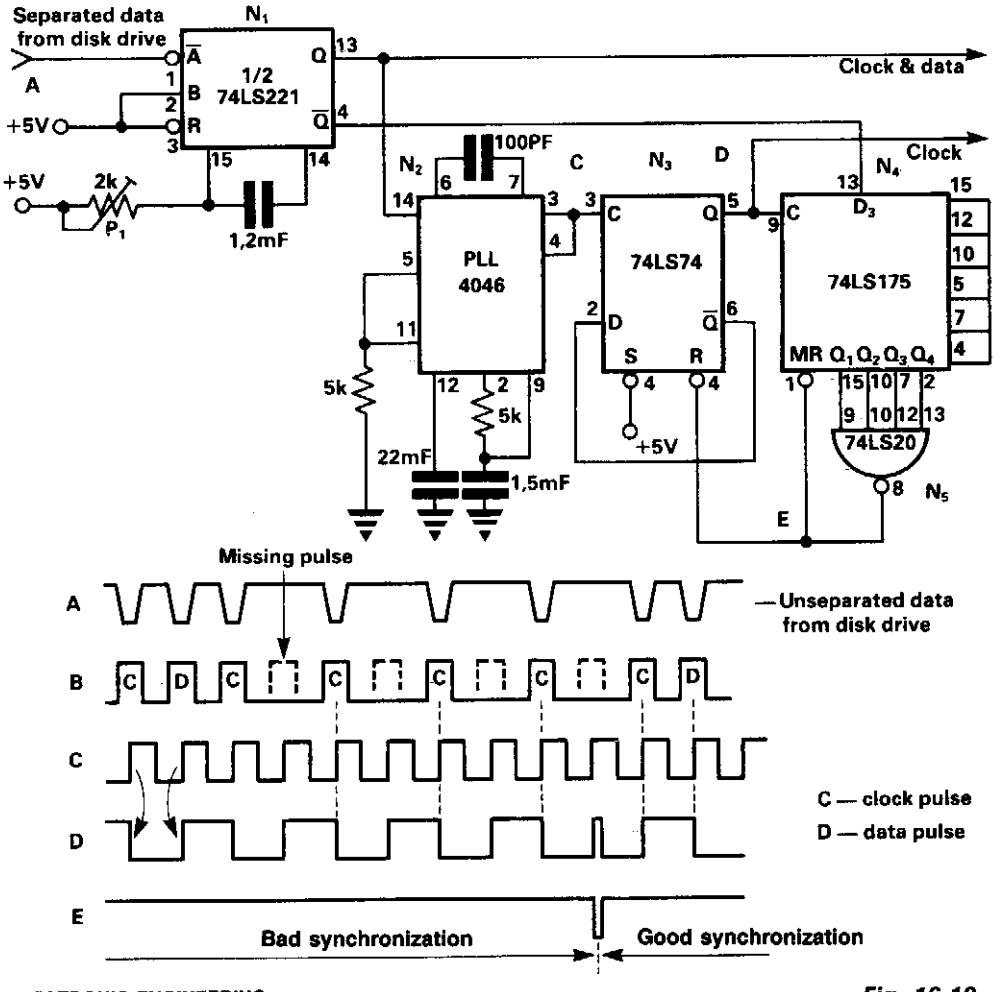

ELECTRONIC ENGINEERING

Fig. 16-10

Circuit Notes

The data separator is intended for use with 8" flexible diskettes with IBM 3870 soft sectored format. The circuit delivers data and clock (B) and clock pulses (D). These two signals must be in such a sequence that the negative edge of the clock pulse is at the middle of a data cell.

Unseparated data (A) from the floppy unit is shaped with one shot N1. Trimmer P1 should be adjusted so that pulses (B) are 1 μs wide. This signal synchronizes PLL N2 with a free running frequency adjusted to 500 kHz. The output of the PLL is 90° out of phase with its input. D-type flip-flop N3 is connected as a divider by two and changes state at each positive edge of (C). N4, connected as a shift register, looks for four consecutive missing pulses. When this happens, the circuit is resynchronized with (E) so that the negative edge of (D) is in the middle of a data cell.

17

Converters

The sources of the following circuits are contained in the Sources section beginning on page 694. The figure number contained in the box of each circuit correlates to the source entry in the Sources section.

Voltage-to-Pulse Duration Converter
Voltage-to-Current Converters
TTL-to-MOS Logic Converter
TTL Square Wave-to-Triangle Converter
A Regulated DC-to-DC Converter
Capacitance to Pulse Width Converter
Current-to-Voltage Converter with Grounded Bias and Sensor
Triangle-to-Sine Converters
Precision Peak-to-Peak AC-DC Converter
Photodiode Current-to-Voltage Converter
Self Oscillating Flyback Converter
RMS-to-DC Converter
100 MHz Converter
Precision Voltage-to-Frequency Converter
Bipolar DC-DC Converter Requires No Inductor

VOLTAGE-TO-PULSE DURATION CONVERTER

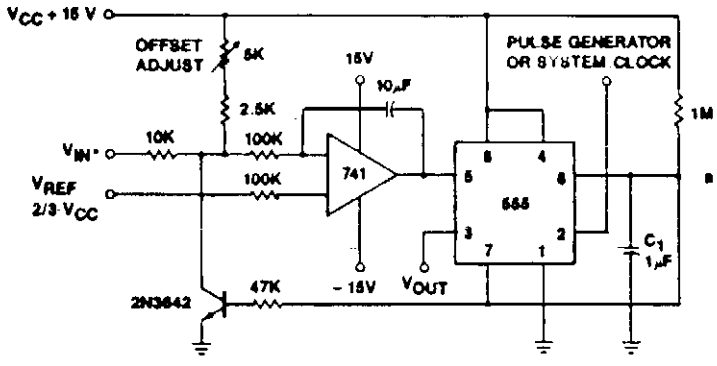

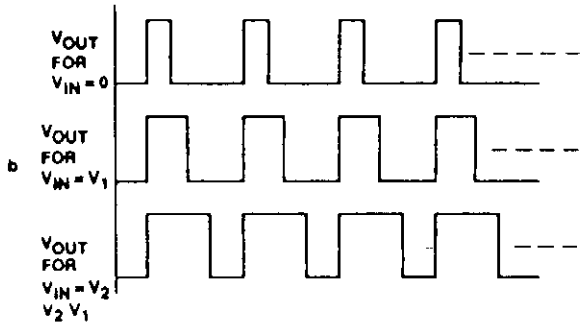

NOTES:
All resistor values in ohms
*V_{IN} is limited to 2 diode drops within ground or below V_{CC}

SIGNETICS

Fig. 17-1.

Circuit Notes

Voltage levels can be converted to pulse durations by combining an op amp and a timer IC. Accuracies to better than 1% can be obtained with this circuit (a), and the output signals (b) still retain the original frequency, independent of the input voltage.

VOLTAGE-TO-CURRENT CONVERTERS

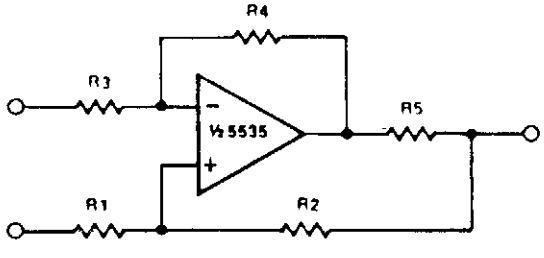

NOTES:

$$\frac{R_2}{R_1} = \frac{R_4}{R_3}$$

$$I_{OUT} = \frac{V_{IN} \cdot R_2}{R_5 \cdot R_1}$$

SIGNETICS

Circuit Notes

A simple voltage-to-current converter is shown in the figure. The current out is I_{OUT} or V_{IN}/R. For negative currents, a pnp can be used and, for better accuracy, a Darlington pair can be substituted for the transistor. With careful design, this circuit can be used to control currents of many amps. Unity gain compensation is necessary.

Fig. 17-2

TTL-TO-MOS LOGIC CONVERTER

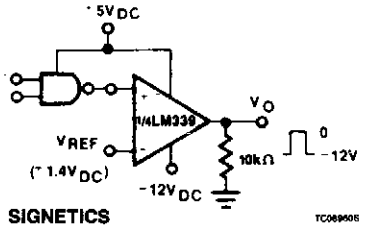

SIGNETICS

Fig. 17-3

TTL SQUARE WAVE-TO-TRIANGLE CONVERTER

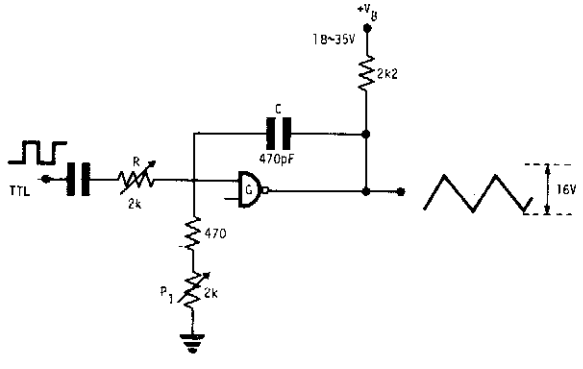

ELECTRONIC ENGINEERING

Fig. 17-4

Circuit Notes

This fixed frequency triangular waveform generator driven by a TTL square wave generates typically 16-V p-p triangles at frequencies up to several MHz. It uses only one NAND open collector gate, or one open collector inverter as a fast integrator with gain. Careful successive adjustments of R and P1 are needed. When correct adjustments are reached, output amplitude and linearity are largely independent of the value of V_B, from a minimum of 18 V up to 35 V. The value of C shown is for 100 kHz; at higher frequencies, it must be reduced in proportion.

A REGULATED DC-TO-DC CONVERTER

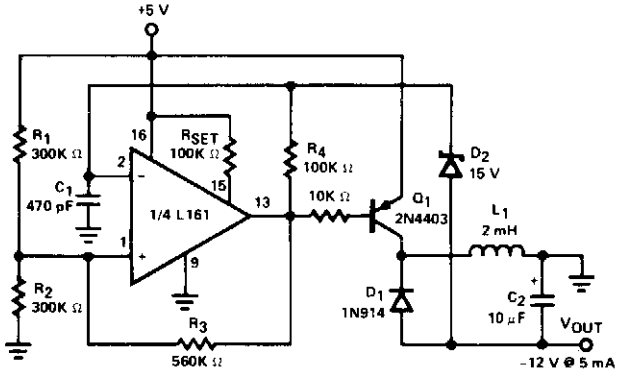

SILICONIX

Fig. 17-5

CAPACITANCE TO PULSE WIDTH CONVERTER

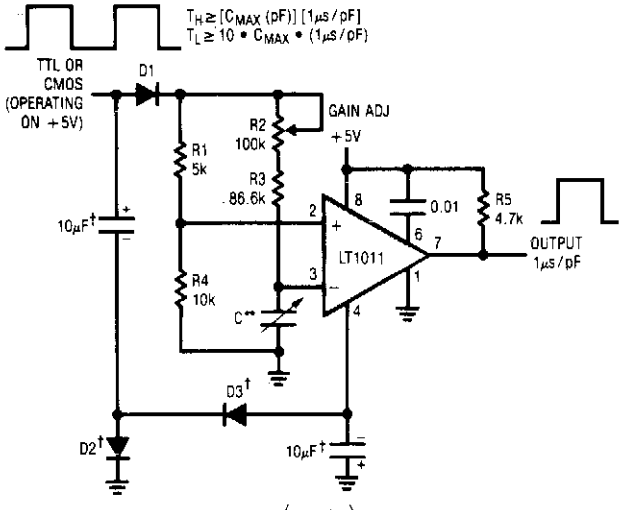

Fig. 17-6

*$PW = (R2 + R3)(C)\left(\frac{R1 + R4}{R1}\right)$, INPUT CAPACITANCE OF LT1011 IS ≈6pF. THIS IS AN OFFSET TERM.

†THESE COMPONENTS MAY BE ELIMINATED IF NEGATIVE SUPPLY IS AVAILABLE (−1V TO −15V).

**TYPICAL 2 SECTIONS OF 365pF VARIABLE CAPACITOR WHEN USED AS SHAFT ANGLE INDICATION.

LINEAR TECHNOLOGY CORP.

CURRENT-TO-VOLTAGE CONVERTER WITH GROUNDED BIAS AND SENSOR

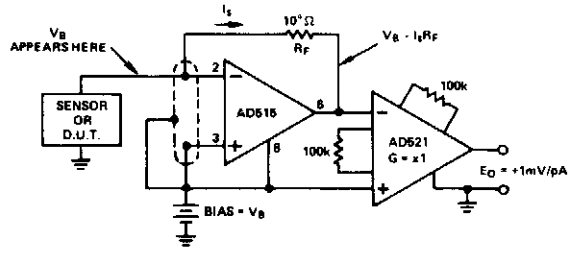

ANALOG DEVICES, INC.

Fig. 17-7

TRIANGLE-TO-SINE CONVERTERS

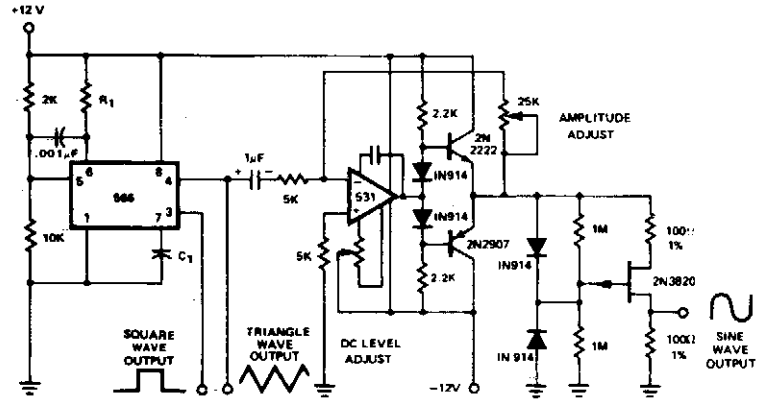

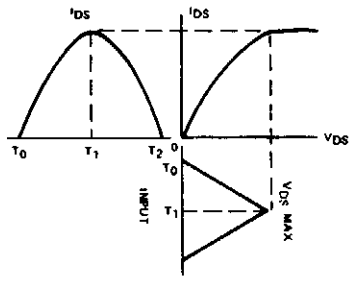

SIGNETICS

Fig. 17-8

Circuit Notes

Conversion of triangle wave shapes to sinusoids is usually accomplished by diode-resistor shaping networks, which accurately reconstruct the sine wave segment by segment. Two simpler and less costly methods may be used to shape the triangle waveform of the 566 into a sinusoid with less than 2% distortion. The non-linear $I_{DS}V_{DS}$ transfer characteristic of a P-channel junction FET is used to shape the triangle waveform. The amplitude of the triangle waveform is critical and must be carefully adjusted to achieve a low distortion sinusoidal output. Naturally, where additional waveform accuracy is needed, the diode-resistor shaping scheme can be applied to the 566 with excellent results since it has very good output amplitude stability when operated from a regulated supply.

PRECISION PEAK-TO-PEAK AC-DC CONVERTER

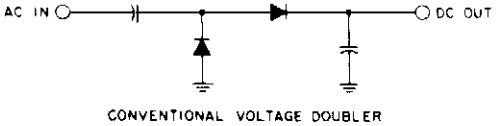

CONVENTIONAL VOLTAGE DOUBLER

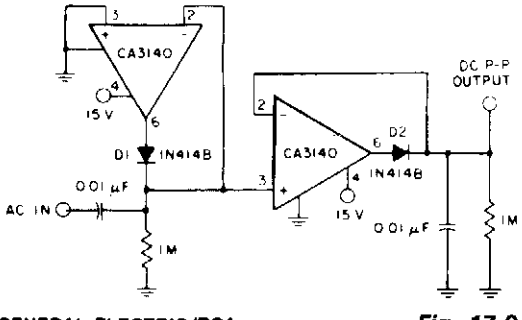

GENERAL ELECTRIC/RCA

Fig. 17-9

Circuit Notes

Using a CA3140 BiMOS op amp and a single positive supply converts a conventional voltage doubler with two precision diodes into a precision peak-to-peak ac-to-dc voltage converter having wide dynamic range and wide bandwidth.

ALL RESISTANCE VALUES ARE IN OHMS

"Reprinted with permission from Electronic Design, Vol 25, No 24, copyright Hayden Publishing Co., Inc 1977"

PHOTODIODE CURRENT-TO-VOLTAGE CONVERTER

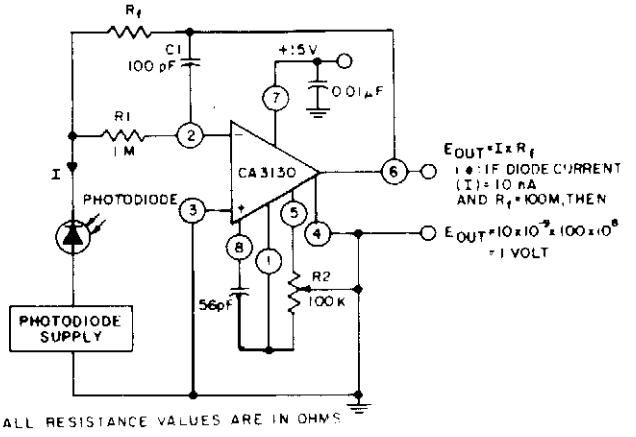

Fig. 17-10

GENERAL ELECTRIC/RCA

Circuit Notes

The circuit uses three CA3130 BiMOS op amps in an application sensitive to sub-picoampere input currents. The circuit provides a ground-referenced output voltage proportional to input current flowing through the photodiode.

SELF OSCILLATING FLYBACK CONVERTER

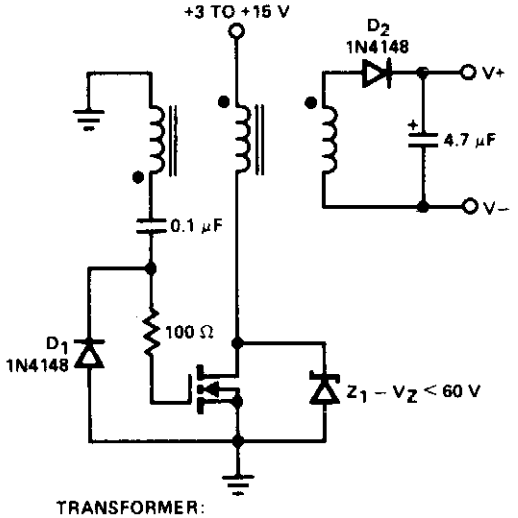

Circuit Notes

Low-power converter uses the core characteristics to determine frequency. With the transformer shown, operating frequency is 250 kHz. Diode D1 prevents negative spikes from occurring at the MOSFET gate, the 100 ohm resistor is a parasitic suppressor, and Z1 serves as a dissipative voltage regulator for the output and also clips the drain voltage to a level below the rated power FET breakdown voltage.

SILICONIX, INC.

Fig. 17-11

RMS-TO-DC CONVERTER

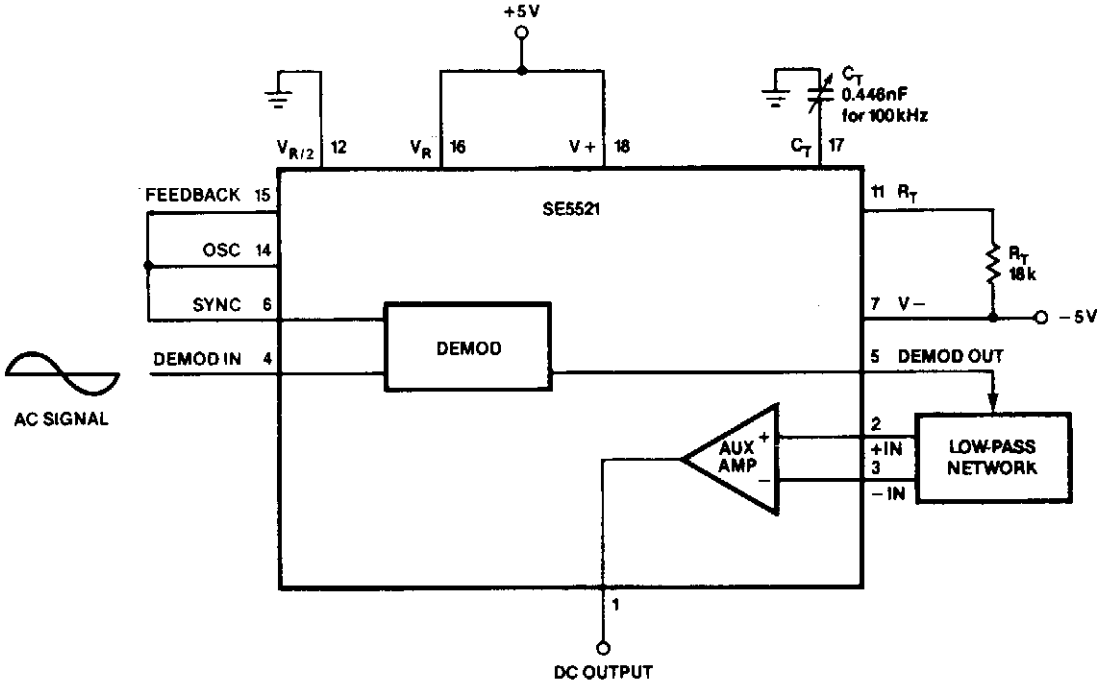

NOTE:
1. The DC output at Pin 1 varies linearly with the RMS input at Pin 4.
2. C_T is tweaked until the sync signal is in phase with the AC signal.

SIGNETICS

Fig. 17-12

Circuit Notes

An ac voltmeter may be easily constructed. Simplicity of the circuit and low component count make it particularly attractive. The demodulator output is a full-wave rectified signal from the ac input at Pin 4. The dc component on the rectified signal at Pin 5 varies linearity with the rms input at Pin 4 and thus provides an accurate rms-to-dc conversion at the output of the filter (Pin 1). C_T is a variable capacitor that is tweaked until the oscillator signal to the sync input of the demodulator is in phase with the ac signal at Pin 4.

100 MHz CONVERTER

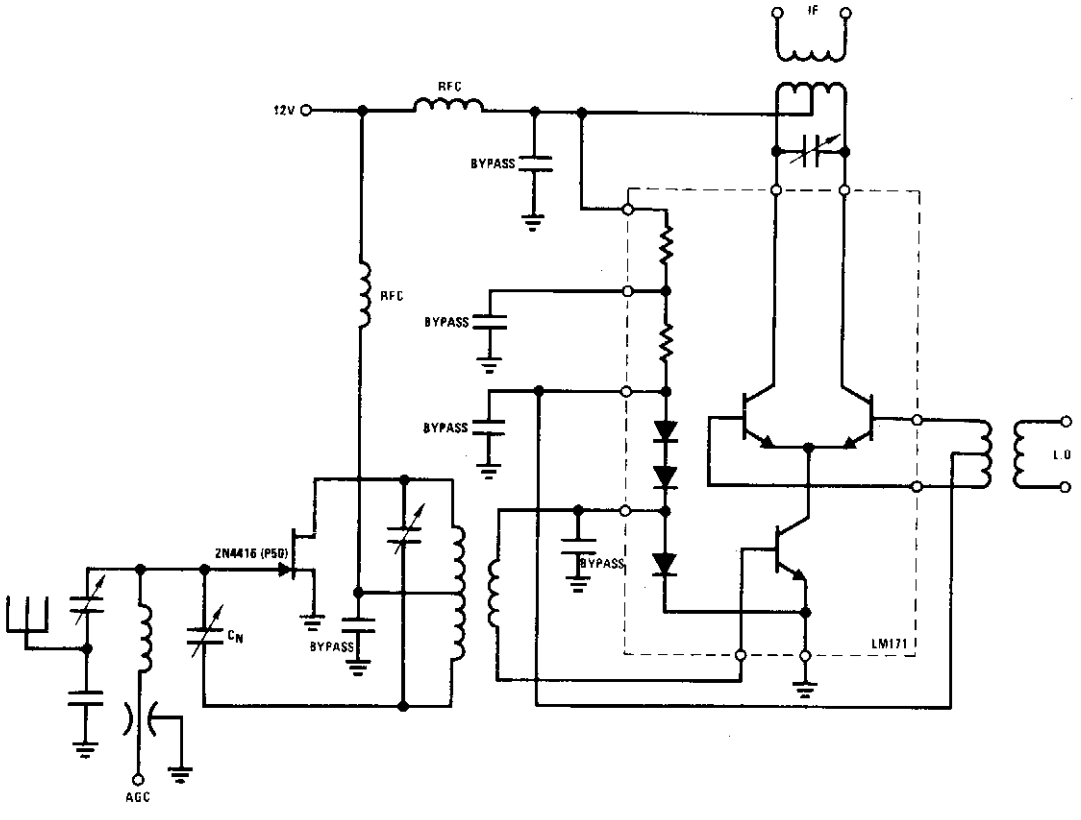

NATIONAL SEMICONDUCTOR CORP.

Fig. 17-13

Circuit Notes

The 2N4416 JFET will provide noise figures of less than 3 dB and power gain of greater than 20 dB. The JFET's outstanding low crossmodulation and low intermodulation distortion provides an ideal characteristic for an input stage. The output feeds into an LM171 used as a balanced mixer. This configuration greatly reduces local oscillator radiation both into the antenna and into the *if* strip and also reduces *rf* signal feedthrough.

PRECISION VOLTAGE-TO-FREQUENCY CONVERTER

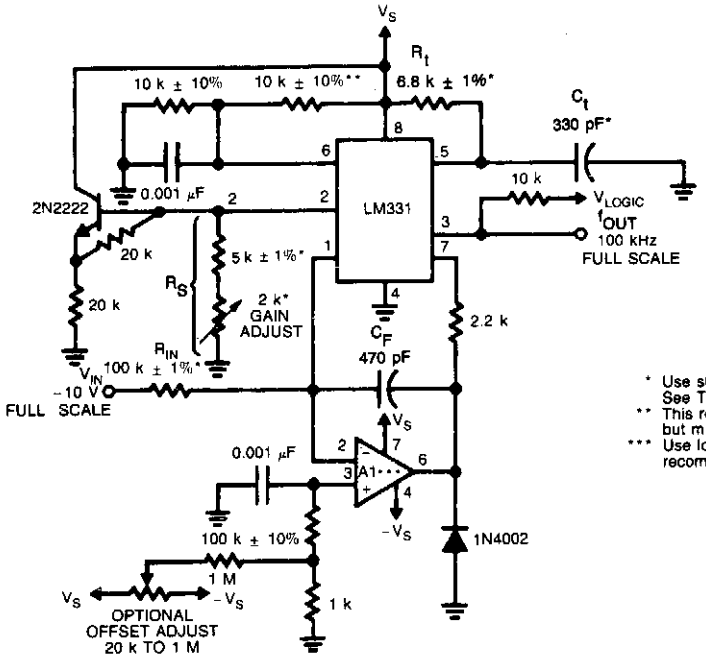

* Use stable components with low temperature coefficients. See Typical Applications section.
** This resistor can be 5 kΩ or 10 kΩ for V_S = 8 V to 22 V, but must be 10 kΩ = 4.5 V to 8 V.
*** Use low offset voltage and low offset current op amps for A1: recommended types LF411A or LF356.

NATIONAL SEMICONDUCTOR CORP.

Fig. 17-14

Circuit Notes

In this circuit, integration is performed by using a conventional operational amplifier and feedback capacitor, C_F. When the integrator's output crosses the nominal threshold level at pin 6 of the LM131, the timing cycle is initiated. The average current fed into the op amp's summing point (pin 2) is $i \times (1.1\ R_tC_t) \times f$ which is perfectly balanced with $-V_{IN}/R_{IN}$. In this circuit, the voltage offset of the LM131 input comparator does not affect the offset or accuracy of the V-to-F converter as it does in the stand-alone V-to-F converter, nor does the LM131 bias current or offset current. Instead, the offset voltage and offset current of the operational amplifier are the only limits on how small the signal can be accurately converted.

BIPOLAR DC-DC CONVERTER REQUIRES NO INDUCTOR

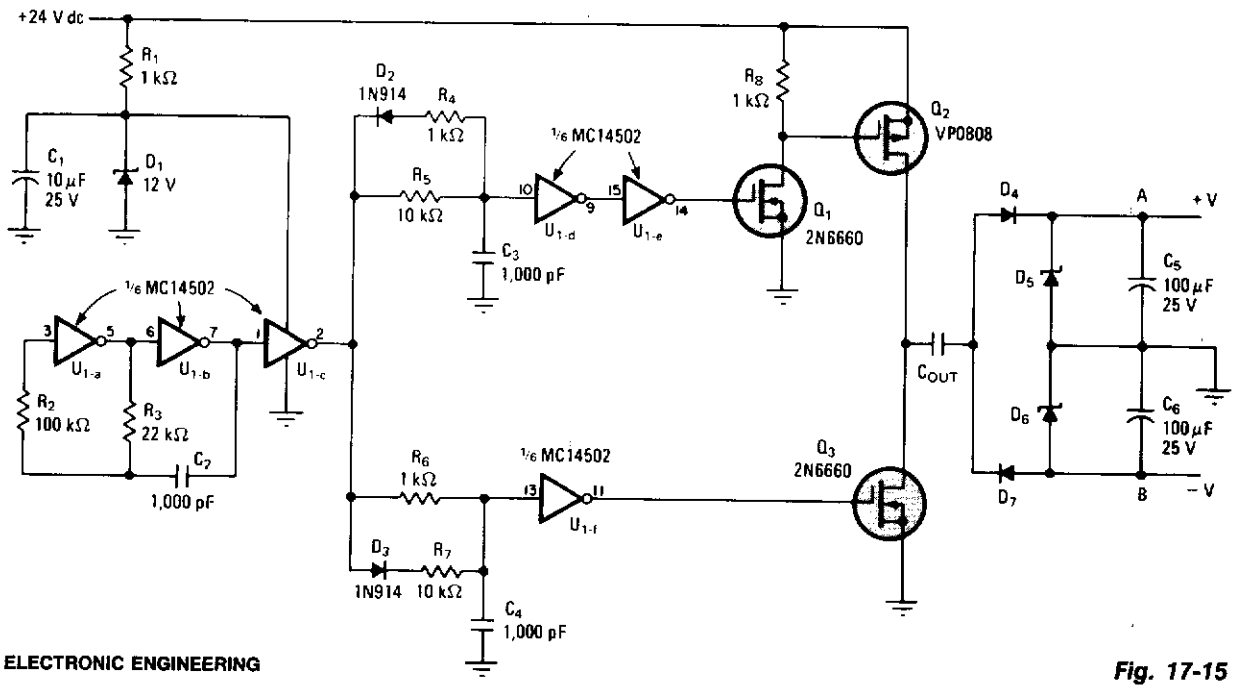

ELECTRONIC ENGINEERING

Fig. 17-15

Circuit Notes

Inverters U1a and U1b form a 20-kilohertz oscillator whose square wave output—further shaped by D2, R4, and R5 and by D3, R6, and R7—drives power field-effect transistors Q2 and Q3. The p-channel and n-channel FETs conduct alternately, in a push-pull configuration. When Q2 conducts, the positive charge on C_{out} forces diode D4 to conduct as well, which produces a positive voltage, determined by zener diode D5, at terminal A. Similarly, when Q3, in its turn conducts, the negative charge on C_{out} forces D7 to do so as well. A negative voltage, therefore, develops at terminal B, whose level is set by D6.

18

Counters

The sources of the following circuits are contained in the Sources section beginning on page 694. The figure number contained in the box of each circuit correlates to the source entry in the Sources section.

8-Digit Up/Down Counter
Ring Counter with Variable Timing
20 kHz Ring Counter
Binary Counter
100 MHz Frequency, Period Counter
Analog Counter Circuit
Attendance Counter
10 MHz Universal Counter

8-DIGIT UP/DOWN COUNTER

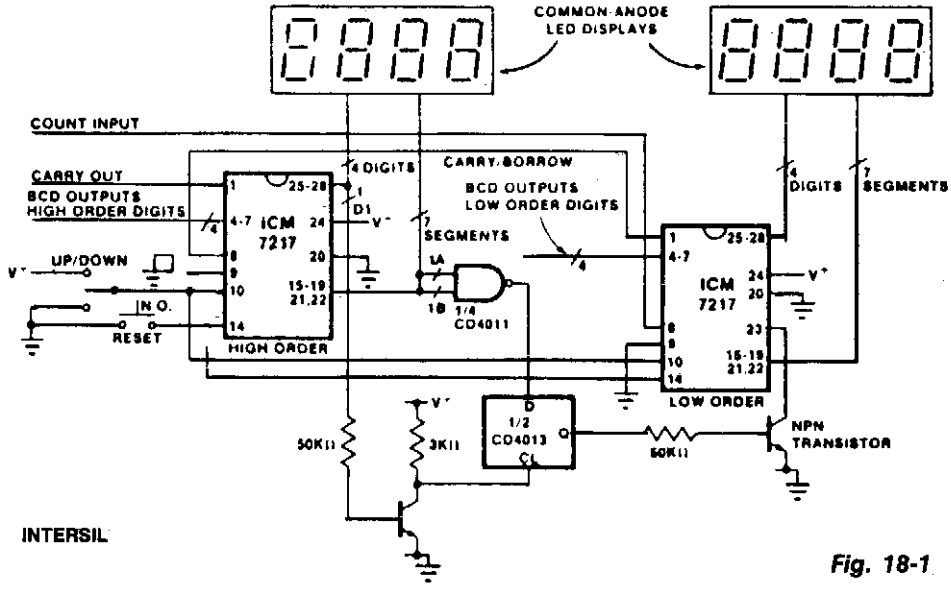

Fig. 18-1

Circuit Notes

This circuit shows how to cascade counters and retain correct leading zero blanking. The NAND gate detects whether a digit is active since one of the two segments a or b is active on any unblanked number. The flip flop is clocked by the least significant digit of the high order counter, and if this digit is not blanked, the Q output of the flip flop goes high and turns on the npn transistor, thereby inhibiting leading zero blanking on the low order counter.

RING COUNTER WITH VARIABLE TIMING

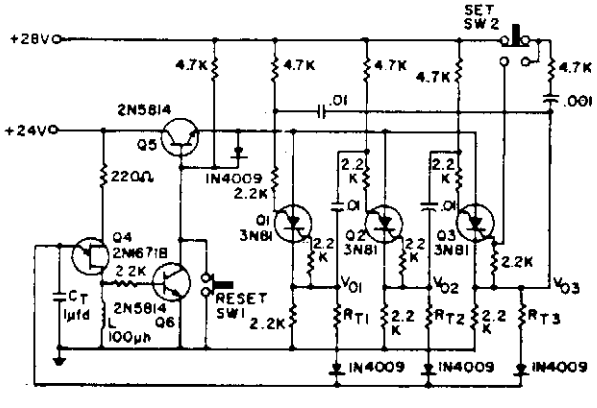

GENERAL ELECTRIC

Fig. 18-2

Circuit Notes

Shift pulses are generated by the unijunction transistors. The intervals between pulses are controlled by C_T and R_T. A different R_T can be selected for each stage of the counter as shown.

20 kHz RING COUNTER

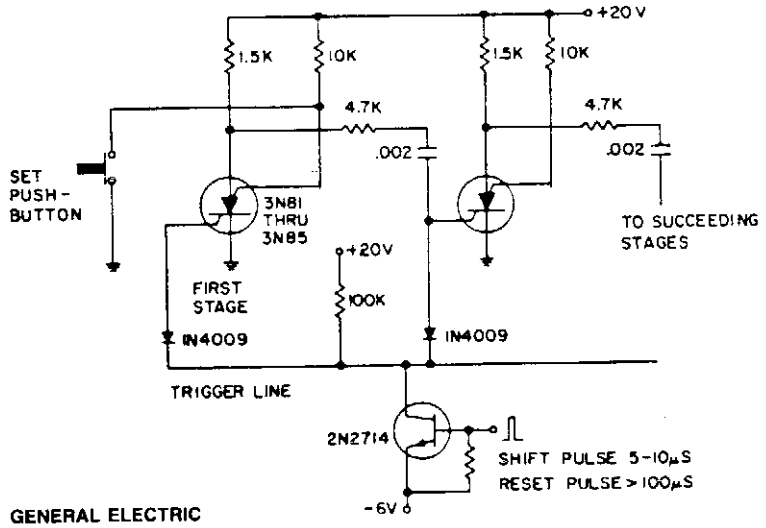

Fig. 18-3

Circuit Notes

The shift pulse turns off the conducting scs by reverse biasing the cathode gate. The charge stored on the coupling capacitor then triggers the next stage. An excessively long shift pulse charges up all the capacitors, turning off all stages. Grounding an anode gate will "set" that stage.

BINARY COUNTER

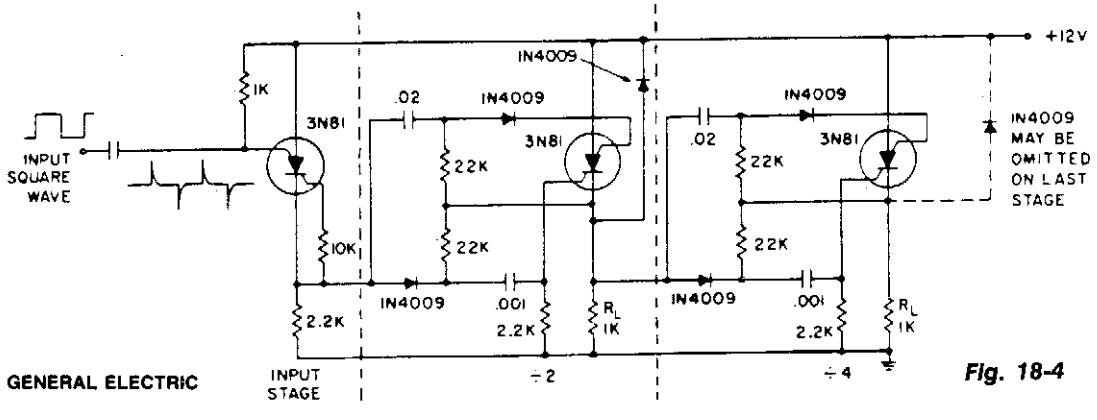

Fig. 18-4

Circuit Notes

Stages are triggered by the positive going edge. The scs is turned on at the cathode gate; turned off at the anode gate. The anode-to-cathode IN4009 suppresses positive transients while the scs is recovering. The input stage generates fast positive edges to trigger the counter.

100 MHz FREQUENCY, PERIOD COUNTER

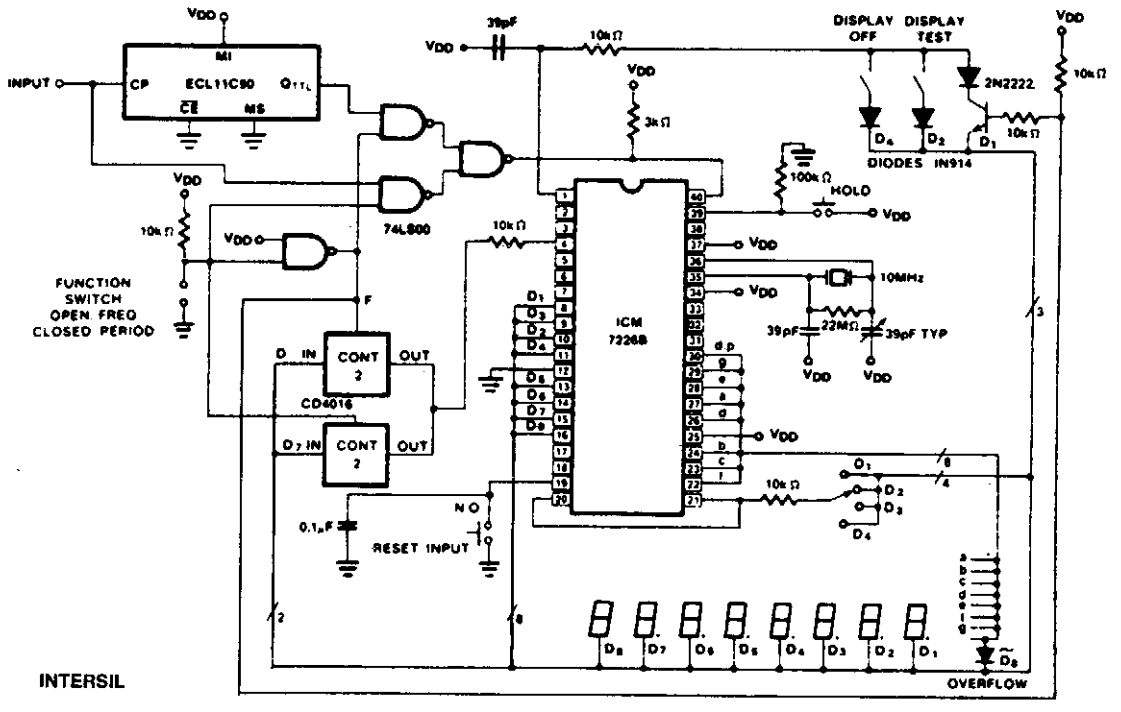

Fig. 18-5

Circuit Notes

The figure shows the use of a CD4016 analog multiplex to multiplex the digital outputs back to the FUNCTION input. Since the CD4016 is a digitally controlled analog transmission gate, no level shifting of the digit output is required. The CD4051's or CD4052's could also be used to select the proper inputs for the multiplexed input on the ICM7226 from 2 or 3 bit digital inputs. These analog multiplexers may also be used in systems in which the mode of operation is controlled by a microprocessor rather than directly from front panel switches. TTL multiplexers such as the 74LS153 or 74LS251 may also be used, but some additional circuitry will be required to convert the digit output to TTL compatible logic levels.

ANALOG COUNTER CIRCUIT

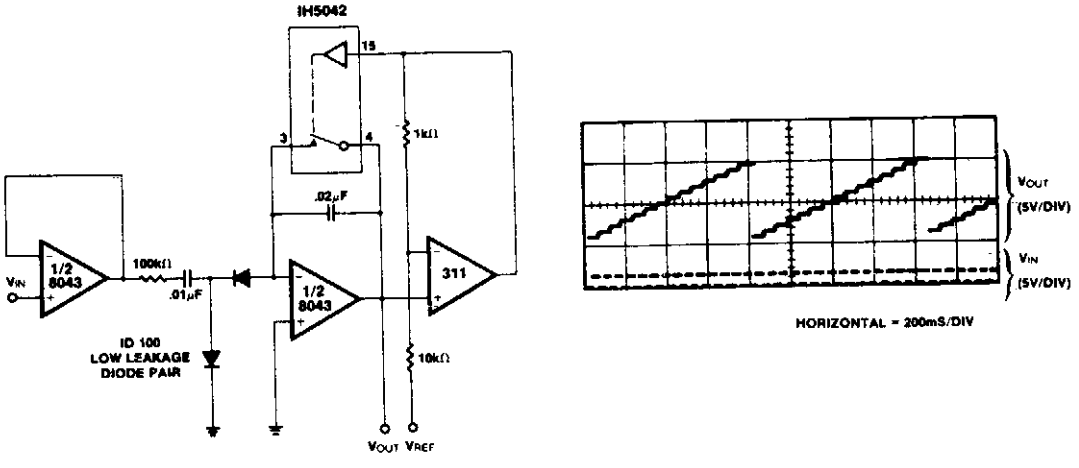

INTERSIL

Fig. 18-6

Circuit Notes

A straightforward circuit using a LM311 for the level detector and a CMOS analog gate to discharge the capacitor is shown. An important property of this type of counter is the ease with which the count can be changed; it is only necessary to change the voltage at which the comparator trips. A low cost A-D converter can also be designed using the same principle since the digital count between reset periods is directly proportional to the analog voltage used as a reference for the comparator. A considerable amount of hysteresis is used in the comparator. This ensures that the capacitor is completely discharged during the reset period. In a more sophisticated circuit, a dual comparator "window detector" could be used, the lower trip point is set close to ground to ensure complete discharge. The upper trip point could then be adjusted independently to determine the pulse count.

ATTENDANCE COUNTER

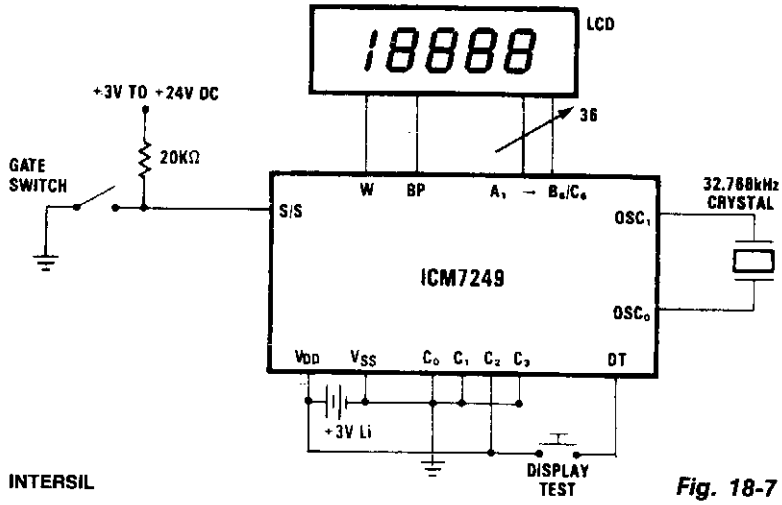

Fig. 18-7

Circuit Notes

The display shows each increment. By using mode 2, external debouncing of the gate switch is unnecessary, provided the switch bounce is less than 35ms. The 3 V lithium battery can be replaced without disturbing operation if a suitable capacitor is connected in parallel with it. The display should be disconnected, if possible, during the procedure to minimize current drain. The capacitor should be large enough to store charge for the amount of time needed to physically replace the battery ($t = VC/1$). A 100 μF capacitor initially charged to 3 V will supply a current of 1.0 μA for 50 seconds before its voltage drops to 2.5 V, which is the minimum operating voltage for the ICM7249.

Before the battery is removed, the capacitor should be placed in parallel, across the V_{DD} and GND terminals. After the battery is replaced, the capacitor can be removed and the display reconnected.

10 MHz UNIVERSAL COUNTER

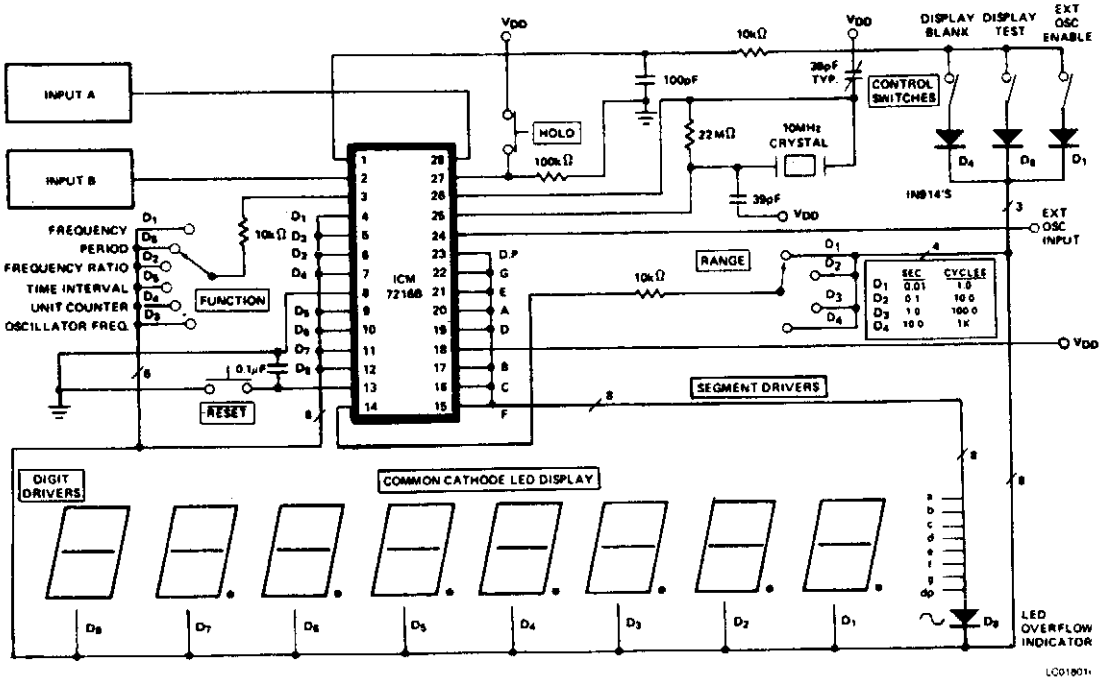

INTERSIL

Fig. 18-8

Circuit Notes

The ICM7216A or B can be used as a minimum component complete Universal Counter. This circuit can use input frequencies up to 10 MHz at INPUT A and 2 MHz at INPUT B. If the signal at INPUT A has a very low duty cycle it may be necessary to use a 74121 monostable multivibrator or similar circuit to stretch the input pulse width to be able to guarantee that it is at least 50 ns in duration.

19

Crystal Oscillators

The sources of the following circuits are contained in the Sources section beginning on page 694. The figure number contained in the box of each circuit correlates to the source entry in the Sources section.

Varactor-Tuned 10 MHz Ceramic Resonator Oscillator
10 MHz Crystal-Controlled Oscillator
Low Power, 5V Driven, Temperature Compensated Crystal Oscillator (TXCO)
Crystal-Controlled LO for SSB Transmitter
Crystal Oscillator
Crystal Controlled Signal Source
1 MHz FET Crystal Oscillator
Pierce Crystal Oscillator
IC-Compatible Crystal Oscillator
Crystal Oscillator Provides Low Noise
Low-Frequency Crystal Oscillator–10 kHz–150 kHz
Overtone Crystal Oscillator
Colpitts Oscillator
Crystal-Controlled Oscillator
High-Frequency Crystal Oscillator
Crystal-Controlled Oscillator Operates from One Mercury Cell
High-Frequency Signal Generator
Crystal Tester
Crystal Stabilized IC Timer can Provide Subharmonic Frequencies

VARACTOR-TUNED 10 MHz CERAMIC RESONATOR OSCILLATOR

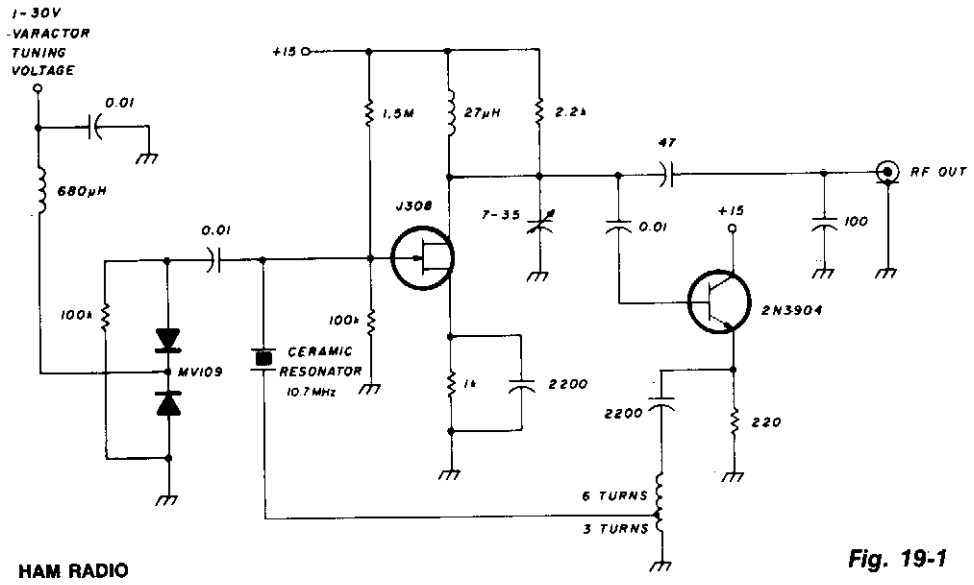

HAM RADIO

Fig. 19-1

Circuit Notes

The FET input amplifier has fixed bias with source feedback. This provides a very high input impedance with very low capacitance. The FET amplifier drives an emitter follower which, in spite of the fact that it has a low output impedance, feeds a transformer with a 3:1 turns ratio for a nine-fold impedance reduction. The result is an impedance at the ceramic resonator of a few ohms maximum. The varactor-tuned ceramic resonator oscillator has a significant frequency-temperature coefficient. The tuning range of the VCO is approximately 232 kHz, with a temperature coefficient of 350 Hz per degree centigrade. When using this circuit as a VCO, the entire 232 kHz range cannot be used because some of the tuning range must be sacrificed for the temperature dependence. If the required tuning range were 200 kHz, leaving 32 kHz for temperature variation, the resulting temperature variation would be more than 90°C.

10 MHz CRYSTAL OSCILLATOR

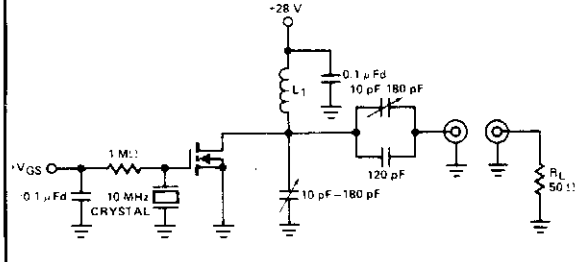

SILICONIX INC.

Fig. 19-2

Circuit Notes

This xtal oscillator is a FET equivalent of a vacuum tube tuned to plate-tuned grid xtal oscillator. Feedback is via the drain to gate capacitance.

Parts List

L_1 – 18 turns #22 enameled wire on micrometals T-50-6 torroid core. ≈ 1.0 µH.

LOW POWER, 5 V DRIVEN, TEMPERATURE COMPENSATED CRYSTAL OSCILLATOR (TXCO)

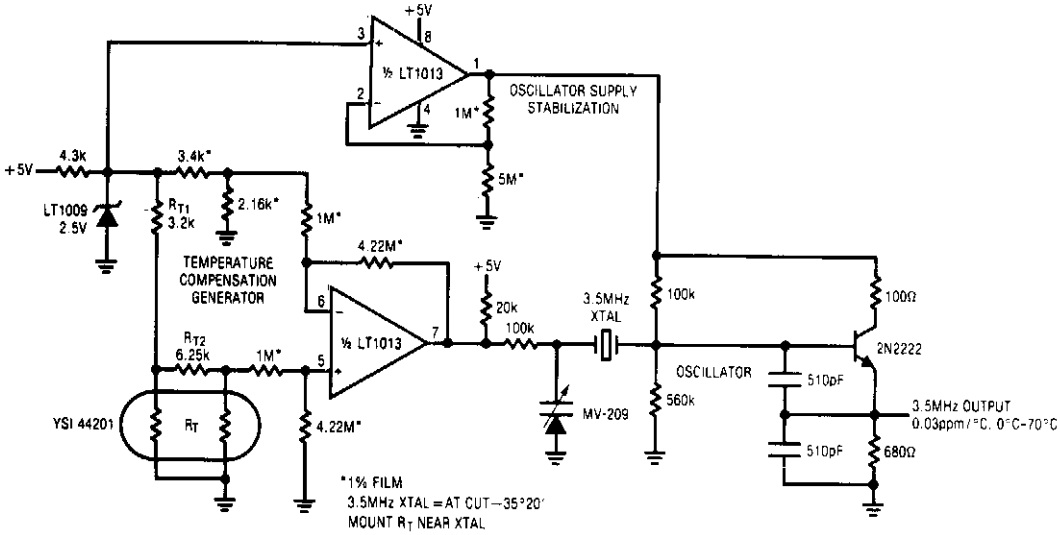

LINEAR TECHNOLOGY CORP.

Fig. 19-3

CRYSTAL-CONTROLLED LOCAL OSCILLATOR FOR SSB TRANSMITTER

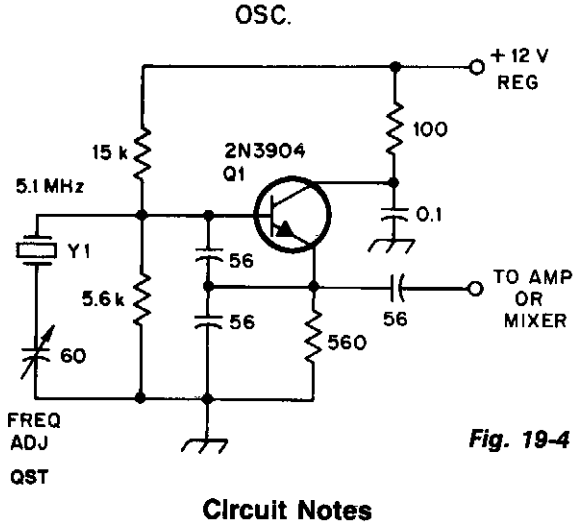

QST

Fig. 19-4

Circuit Notes

This oscillator may contain several switched crystals to provide channelized operation. A buffer amplifier may be added, if desired.

CRYSTAL OSCILLATOR

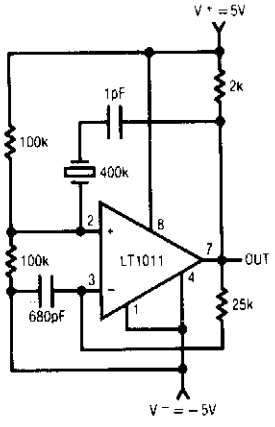

Fig. 19-5

LINEAR TECHNOLOGY CORPORATION

Circuit Notes

This circuit uses an LT1011 comparator biased in its linear mode and a crystal to establish its resonant frequency. This circuit can achieve a few hundred kHz, temperature independent clock frequency with nearly 50% duty cycle.

CRYSTAL-CONTROLLED SIGNAL SOURCE

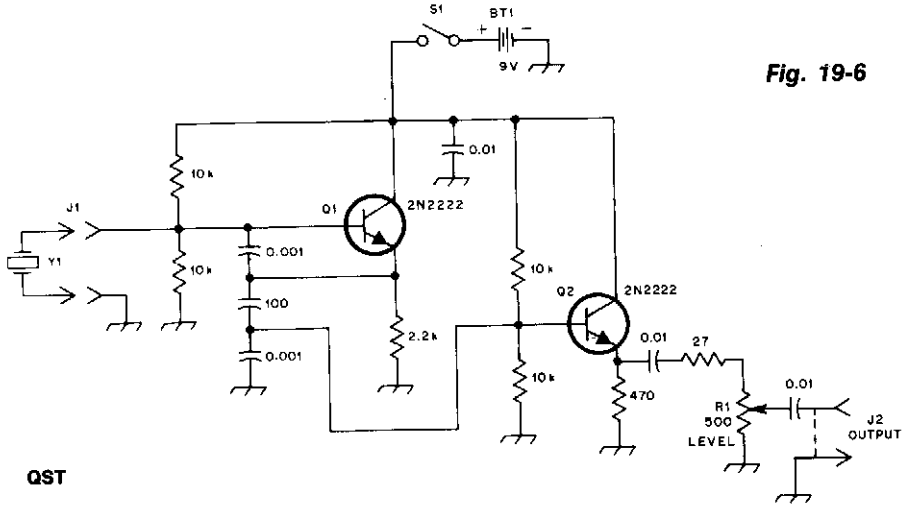

Fig. 19-6

QST

Circuit Notes

This general purpose signal source serves very well in signal-tracing applications. The output level is variable to more than 1 Vrms into a 50 Ω load. Almost any crystal in the 1 to 15 MHz range can be used. Q1 forms a Colpitts oscillator with the output taken from the emitter. A capacitive voltage divider (across the 2.2 K emitter resistor) reduces the voltage applied to the buffer amplifier, Q2. The buffer and emitter follower, provides the low input impedance necessary to drive 50 Ω loads.

1 MHz FET CRYSTAL OSCILLATOR

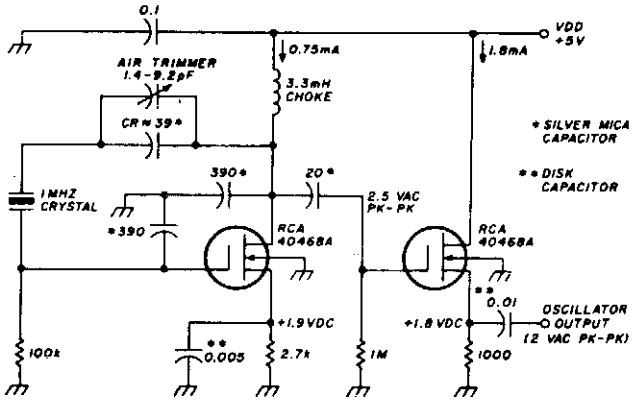

HAM RADIO

Fig. 19-7

Circuit Notes

This stable oscillator circuit exhibits less than 1 Hz frequency change over a V_{DD} range of 3–9 volts. Stability is attributed to the use of MOSFET devices and the use of stable capacitors.

PIERCE CRYSTAL OSCILLATOR

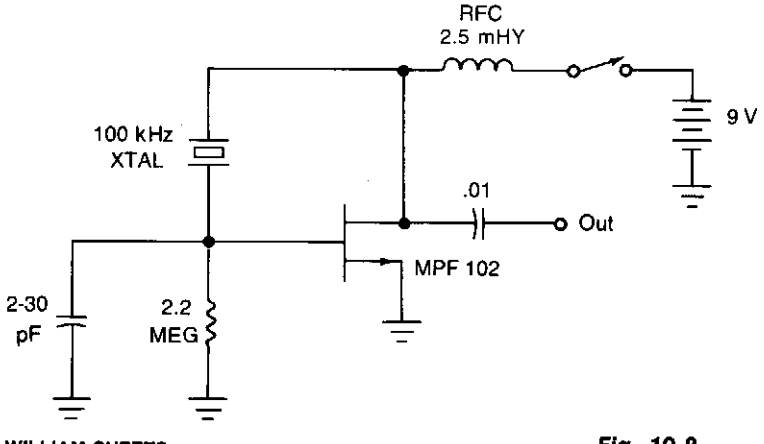

WILLIAM SHEETS

Fig. 19-8

Circuit Notes

The JFET Pierce oscillator is stable and simple. It can be the clock of a microprocessor, a digital timepiece or a calculator. With a probe at the output, it can be used as a precise injection oscillator for troubleshooting. Attach a small length of wire at the output and this circuit becomes a micropower transmitter.

IC-COMPATIBLE CRYSTAL OSCILLATOR

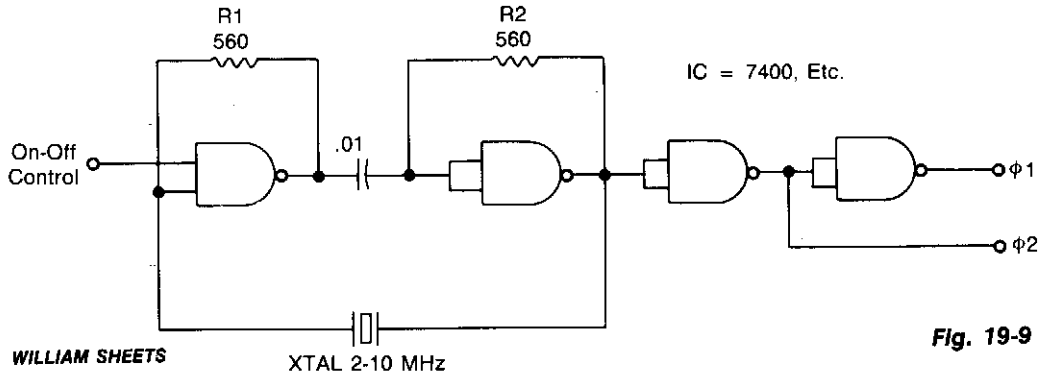

WILLIAM SHEETS

Fig. 19-9

Circuit Notes

Resistors R1 and R2 temperature-stabilize the NAND gates; they also ensure that the gates are in a linear region for starting. Capacitor C1 is a dc block; it must have less than 1/10 ohm impedance at the operating frequency. The crystal runs in a series-resonant mode. Its series resistance must be low; AT-cut crystals for the 1- to 10-MHz range work well. The output waveshape has nearly a 50% duty cycle, with chip-limited rise times. The circuit starts well from 0° to 70°C.

CRYSTAL OSCILLATOR PROVIDES LOW NOISE

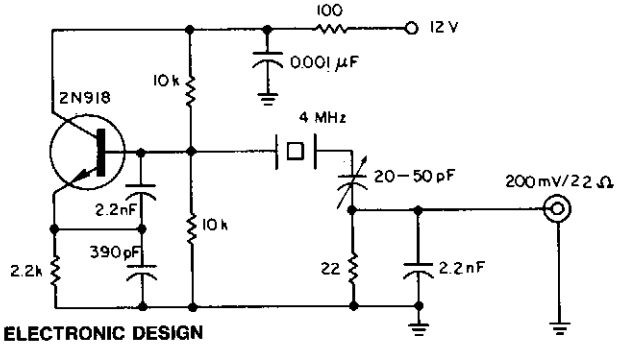

ELECTRONIC DESIGN

Fig. 19-10

Circuit Notes

The oscillator delivers an output of high spectral purity without any substantial sacrifice of the usual stability of a crystal oscillator. The crystal in addition to determining the oscillator's frequency, is used also as a low-pass filter for the unwanted harmonics and as a bandpass filter for the sideband noise. The noise bandwidth is limited to less than 100 Hz. All higher harmonics are substantially suppressed—60 dB down for the third harmonic of the 4-MHz fundamental oscillator frequency.

LOW-FREQUENCY CRYSTAL OSCILLATOR—10 kHz to 150 kHz

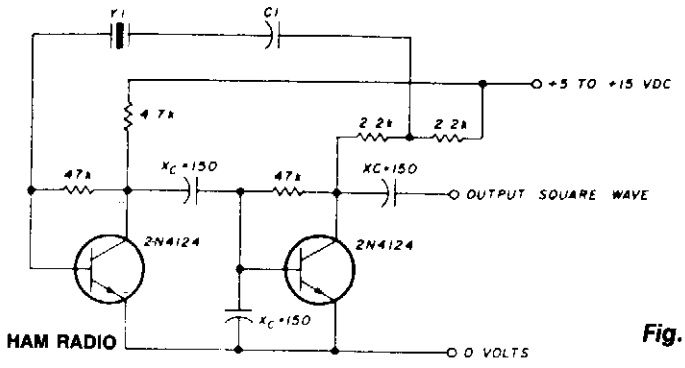

Fig. 19-11

Circuit Notes

C1 in series with the crystal may be used to adjust the oscillator output frequency. Value may range between 20 pF and 0.01 μF, or may be a trimmer capacitor and will approximately equal the crystal load capacitance. X values are approximate and can vary for most circuits and frequencies; this is also true for resistance values. Adequate power supply decoupling is required; local decoupling capacitors near the oscillator are recommended. All leads should be extremely short in high frequency circuits.

OVERTONE CRYSTAL OSCILLATOR

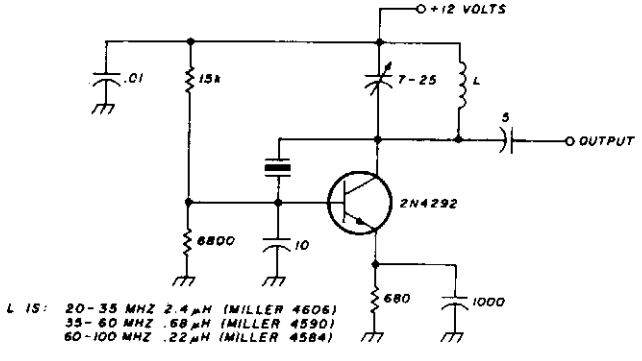

HAM RADIO

Fig. 19-12

Circuit Notes

This oscillator is designed for overtone crystals in the 20–100 MHz range operating in the third and fifth mode. Operating frequency is determined by the tuned circuit.

COLPITTS OSCILLATOR

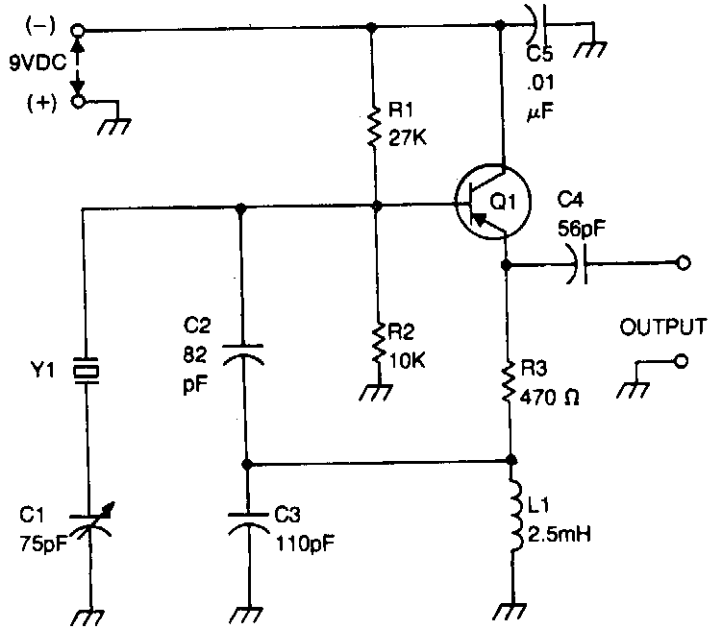

Fig. 19-13

TAB BOOKS, INC.

Circuit Notes

Bias for the pnp bipolar transistor is provided by resistor voltage divider network R1/R2. The collector of the oscillator transistor is kept at ac ground by capacitor C5, placed close to the transistor. Feedback is provided by capacitor voltage divider C2/C3.

CRYSTAL-CONTROLLED OSCILLATOR

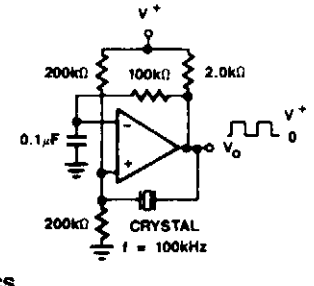

Fig. 19-14

SIGNETICS

HIGH-FREQUENCY CRYSTAL OSCILLATOR

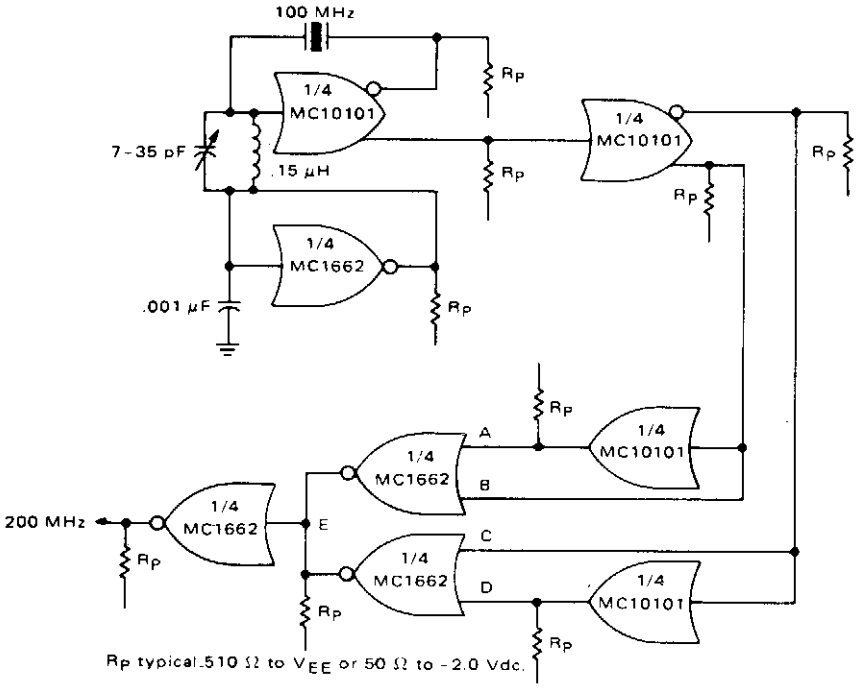

200 MHz Crystal Oscillator

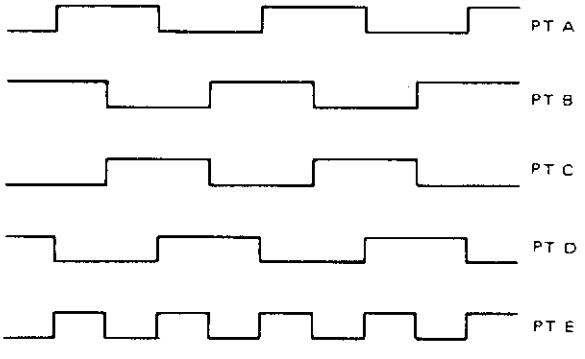

Frequency Doubler Waveforms

MOTOROLA, INC.

Fig. 19-15

HIGH-FREQUENCY CRYSTAL OSCILLATOR, Continued.

Circuit Notes

A high speed oscillator is possible by combining an MECL 10 K crystal oscillator with an MECL III frequency doubler as shown. One section of the MC10101 is connected as a 100 MHz crystal oscillator with the crystal in series with the feedback loop. The LC tank circuit tunes the 100 MHz harmonic of the crystal and may be used to calibrate the circuit to the exact frequency. A second section of the MC10101 buffers the crystal oscillator and gives complementary 100 MHz signals. The frequency doubler consists of two MC10101 gates as phase shifters and two MC1662 NOR gates. For a 50% duty cycle at the output, the delay to the true and complement 100 MHz signals should be 90°. This may be built precisely with 2.5 ns delay lines for the 200 MHz output or approximated by the two MC10101 gates. The gates are easier to incorporate and cause only a slight skew in output signal duty cycle. The MC1662 gates combine the 4 phase 100 MHz signals as shown in Figure B. The outputs of the MC1662's are wire-OR connected to give the 200 MHz signal. MECL III gates are used because of the bandwidth required for 200 MHz signals. One of the remaining MC1662 gates is used as a V_{BB} bias generator for the oscillator. By connecting the NOR output to the input, the circuit stays in the center of the logic swing or at V_{BB}. A 0.001 μF capacitor ensures the V_{BB} circuit does not oscillate.

CRYSTAL-CONTROLLED OSCILLATOR OPERATES FROM ONE MERCURY CELL

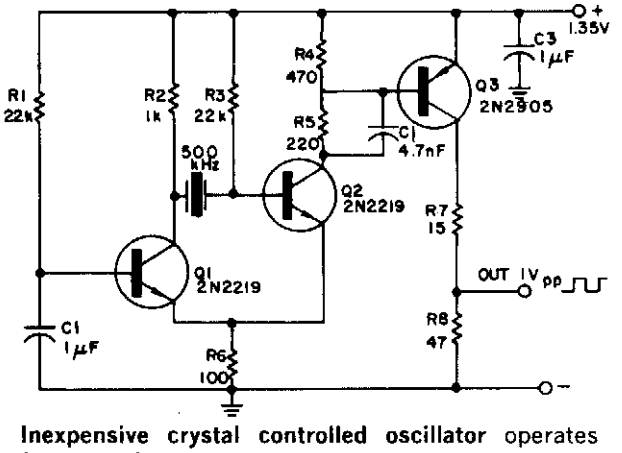

Fig. 19-16

ELECTRONIC DESIGN **Inexpensive crystal controlled oscillator** operates from a 1.35-volt source.

Circuit Notes

The circuit is powered by a single 1.35 V mercury cell and provides a 1 V square-wave output. As shown, the crystal is a tuned circuit between transistors Q1 and Q2, which are connected in the common-emitter configuration. Positive feedback provided by means of R permits oscillation. The signal at the collector of Q2 is squared by Q3, which switches between cutoff and saturation. R7 permits short-circuit-proof operation.

HIGH FREQUENCY SIGNAL GENERATOR

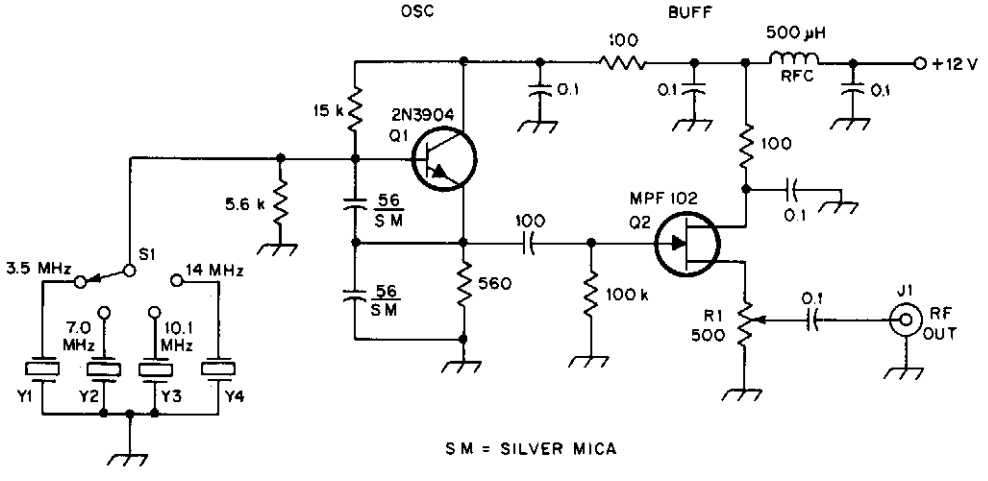

QST

Fig. 19-17

Circuit Notes

A tapped-coil Colpitts oscillator is used at Q1 to provide four tuning ranges from 1.7 to 3.1 MHz, 3.0 to 5.6 MHz, 5.0 to 12 MHz and 11.5 to 31 MHz. A Zener diode (D2) is used at Q1 to lower the operating voltage of the oscillator. A small value capacitor is used at C5 to ensure light coupling to the tuned circuit. Q2 is a source-follower buffer stage. It helps to isolate the oscillator from the generator-output load. The source of Q2 is broadly tuned by means of RFC1. Energy from Q2 is routed to a fed-back, broadband class-A amplifier. A 2 dB attenuator is used at the output of T1 to provide a 50 ohm termination for Q3 and to set the generator-output impedance at 50 ohms. C16, C17 and RFC2 form a brute-force RF decoupling network to keep the generator energy from radiating outside the box on the 12 V supply.

CRYSTAL TESTER

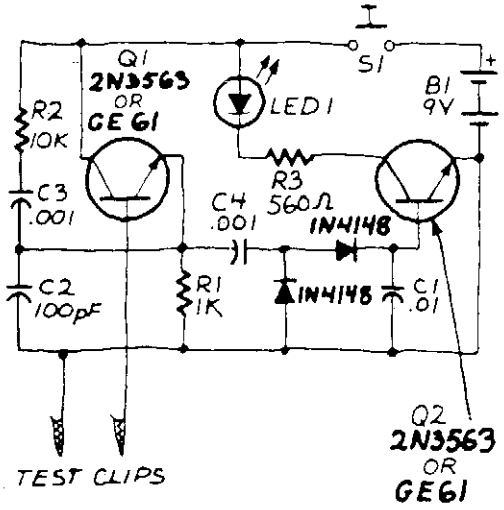

RADIO-ELECTRONICS

Fig. 19-18

Circuit Notes

Transistor Q1, a 2N3563, and its associated components form an oscillator circuit that will oscillate if, and only if, a good crystal is connected to the test clips. The output from the oscillator is then rectified by the two 1N4148 diodes and filtered by C1, a .01 μF capacitor. The positive voltage developed across the capacitor is applied to the base of Q2, another 2N3563, causing it to conduct. When that happens, current flows through LED1, causing it to glow. Since only a good crystal will oscillate, a glowing LED indicates that the crystal is indeed OK. The circuit is powered by a standard nine-volt transistor-radio battery and the SPST pushbutton power-switch is included to prolong battery life.

CRYSTAL-STABILIZED IC TIMER CAN PROVIDE SUBHARMONIC FREQUENCIES

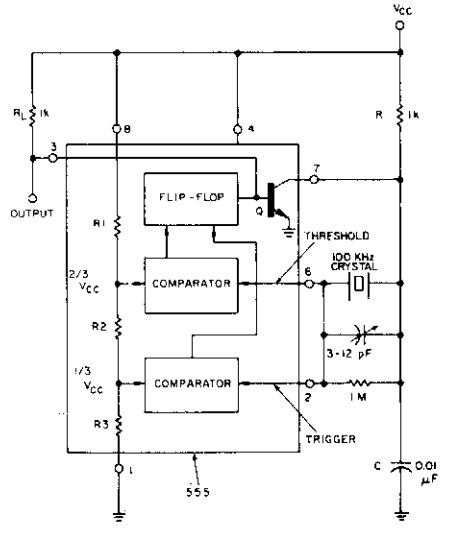

ELECTRONIC DESIGN

Fig. 19-19

The trimmer across the crystal can finely tune the circuit's oscillating frequency.

20
Current Meters

The sources of the following circuits are contained in the Sources section beginning on page 694. The figure number contained in the box of each circuit correlates to the source entry in the Sources section.

Ammeter with Six Decade Range
Current Sensing in Supply Rails
Pico Ammeter
Electrometer Amplifier with Overload Protection
Guarded Input Picoammeter Circuit
Ammeter with Six Decade Range
Picoammeter Circuit

AMMETER WITH SIX DECADE RANGE

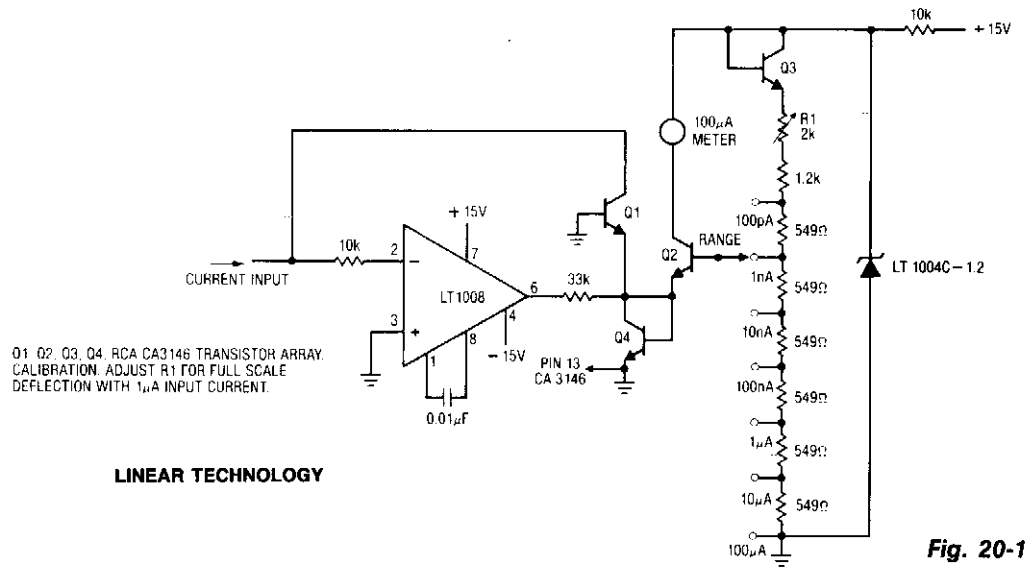

LINEAR TECHNOLOGY

Fig. 20-1

Circuit Notes

The Ammeter measures currents from 100 pA to 100 μA without the use of expensive high value resistors. Accuracy at 100 μA is limited by the offset voltage between Q1 and Q2 and, at 100 pA, by the inverting bias current of the LT1008.

CURRENT SENSING IN SUPPLY RAILS

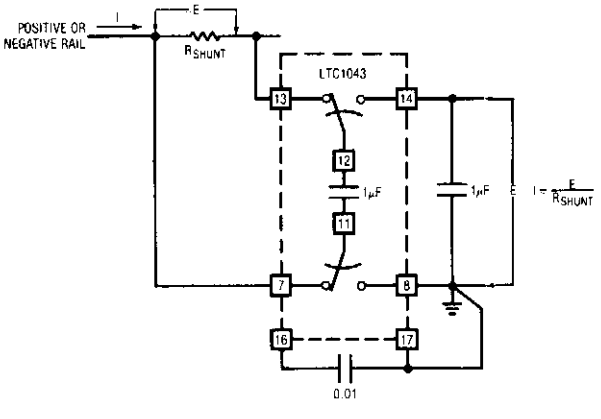

Circuit Notes

The LTC1043 can sense current through a shunt in either of its supply rails. This capability has wide application in battery and solar-powered systems. If the ground-referred voltage output is unloaded by an amplifier, the shunt can operate with very little voltage drop across it, minimizing losses.

LINEAR TECHNOLOGY CORPORATION

Fig. 20-2

PICO AMMETER

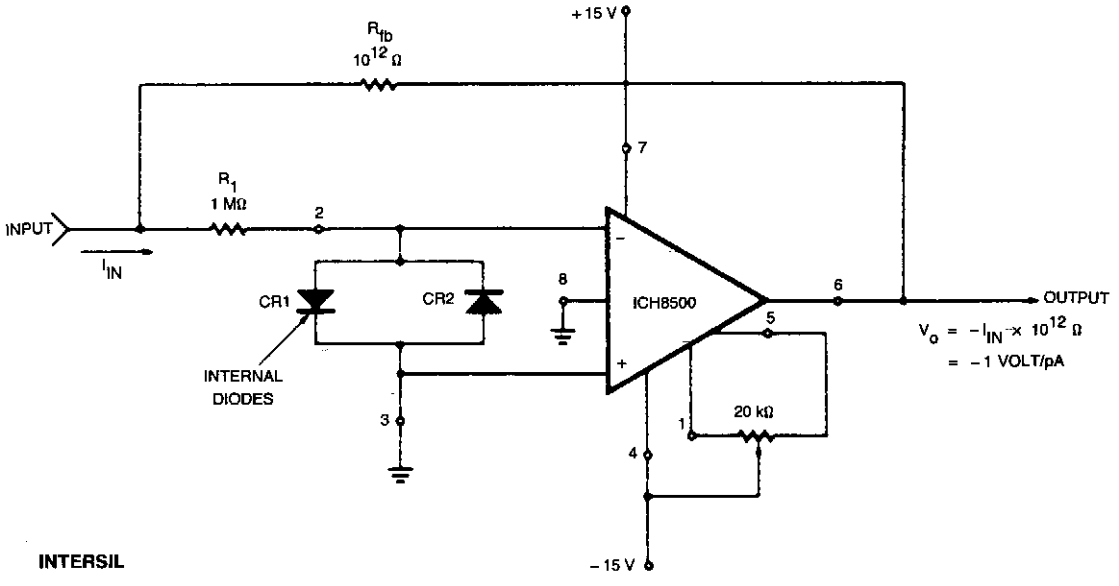

Fig. 20-3

Circuit Notes

Care must be taken to eliminate any stray currents from flowing into the current summing node. This can be accomplished by forcing all points surrounding the input to the same potential as the input. In this case the potential of the input is at virtual ground, or OV. Therefore, the case of the device is grounded to intercept any stray leakage currents that may otherwise exist between the ±15 V input terminals and the inverting input summing junctions. Feedback capacitance should be kept to a minimum in order to maximize the response time of the circuit to step function input currents. The time constant of the circuit is approximately the produce of the feedback capacitance C_{fb} times the feedback resistor R_{fb}. For instance, the time constant of the circuit is 1 sec if C_{fb} = 1pF. Thus, it takes approximately 5 sec (5 time constants) for the circuit to stabilize to within 1% of its final output voltage after a step function of input current has been applied. C_{fb} of less than 0.2 to 0.3 pF can be achieved with proper circuit layout.

ELECTROMETER AMPLIFIER WITH OVERLOAD PROTECTION

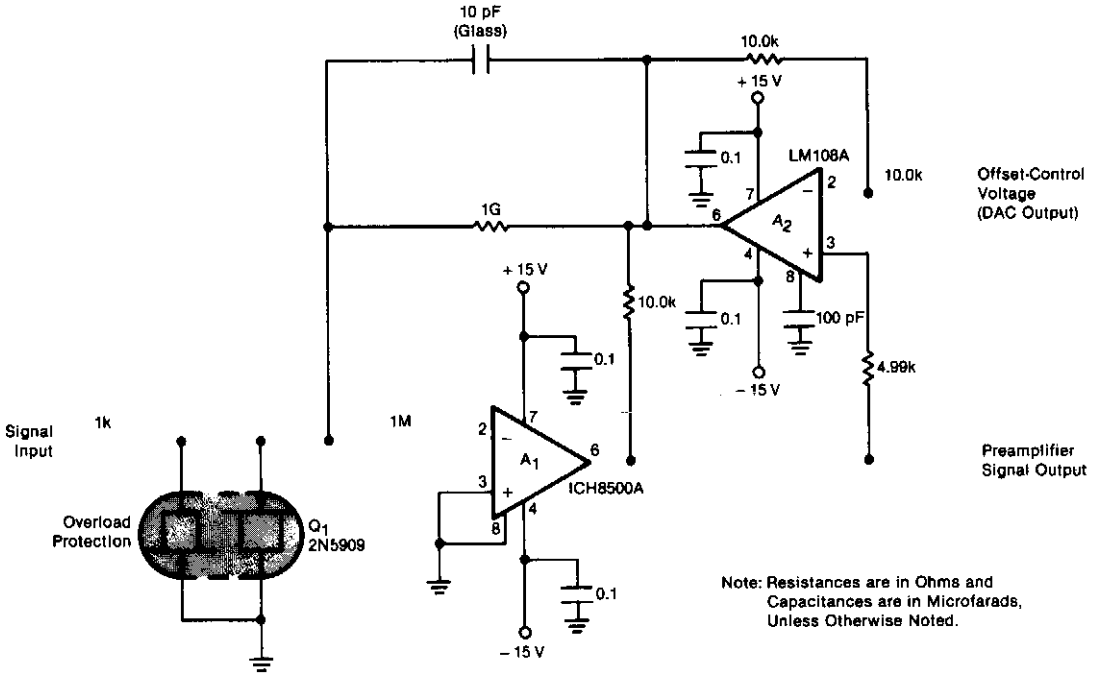

NASA TECH BRIEFS

Fig. 20-4

Circuit Notes

The preamplifier is protected from excessive input signals of either polarity by the 2N5909 junction field-effect transistor. A nulling circuit makes it possible to set the preamplifier output voltage to zero at a fixed low level (up to $\pm 10^{-8}$A) of the input current. (This level is called the standing current and corresponds to the zero-signal level of the instrumentation.) The opposing (offset) current is generated in the 10^9 feedback resistor to buck the standing current. Different current ranges are reached by feeding the preamplifier output to low and high gain amplifier chains. To reduce noise, each chain includes a 1.5 Hz corner active filter.

GUARDED INPUT PICOAMMETER CIRCUIT

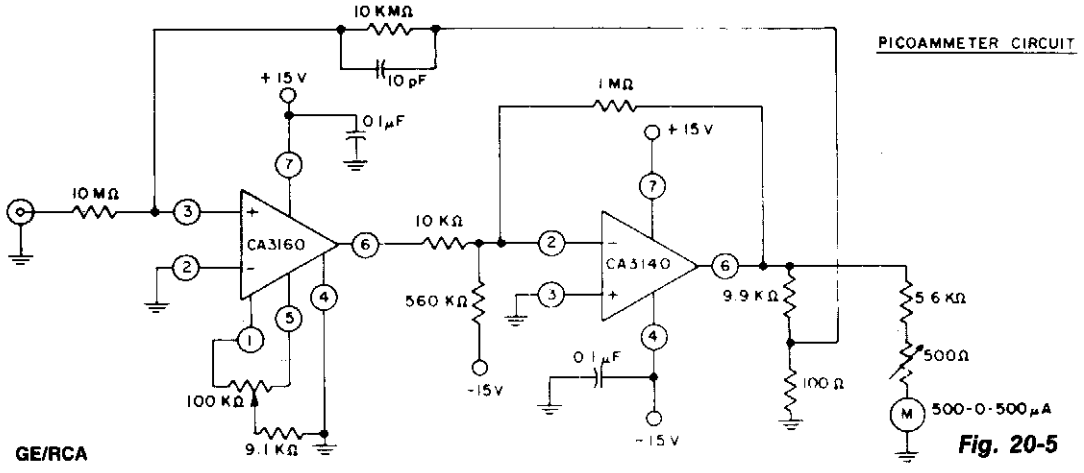

GE/RCA

Fig. 20-5

Circuit Notes

The circuit utilizes CA3160 and CA3140 BiMOS op amps to provide a full-scale meter deflection of ±3 pA. The CA3140 serves as an X100 gain stage to provide the required plus and minus output swing for the meter and feedback network. Terminals 2 and 4 of the CA3160 are at ground potential, thus its input is operated in the "guarded mode."

AMMETER WITH SIX DECADE RANGE

LINEAR TECHNOLOGY CORP.

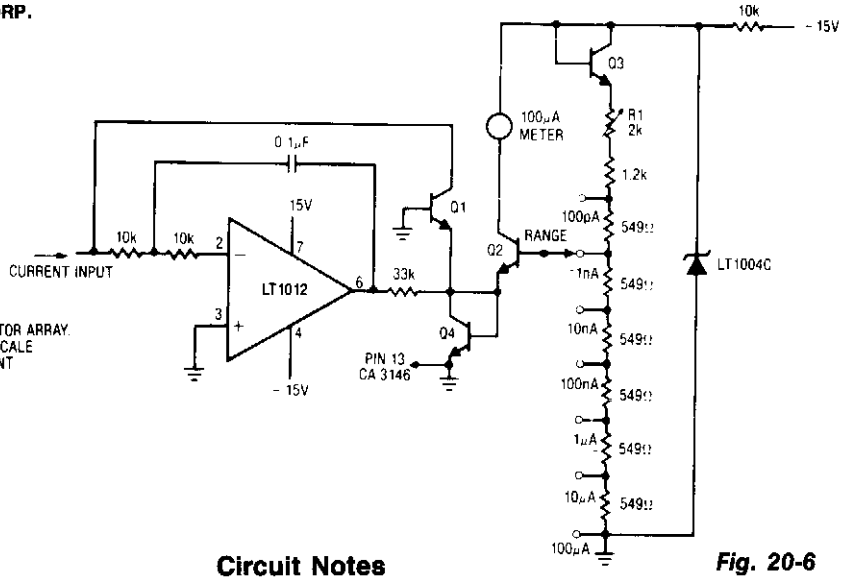

Q1, Q2, Q3, Q4, RCA CA3146 TRANSISTOR ARRAY.
CALIBRATION: ADJUST R1 FOR FULL SCALE DEFLECTION WITH 1μA INPUT CURRENT

Fig. 20-6

Circuit Notes

The Ammeter measures currents from 100 pA to 100 μA without the use of expensive high value resistors. Accuracy at 100 μA is limited by the offset voltage between Q1 and Q2 and, at 100 pA, by the inverting bias current of the LT1008.

PICOAMMETER CIRCUIT

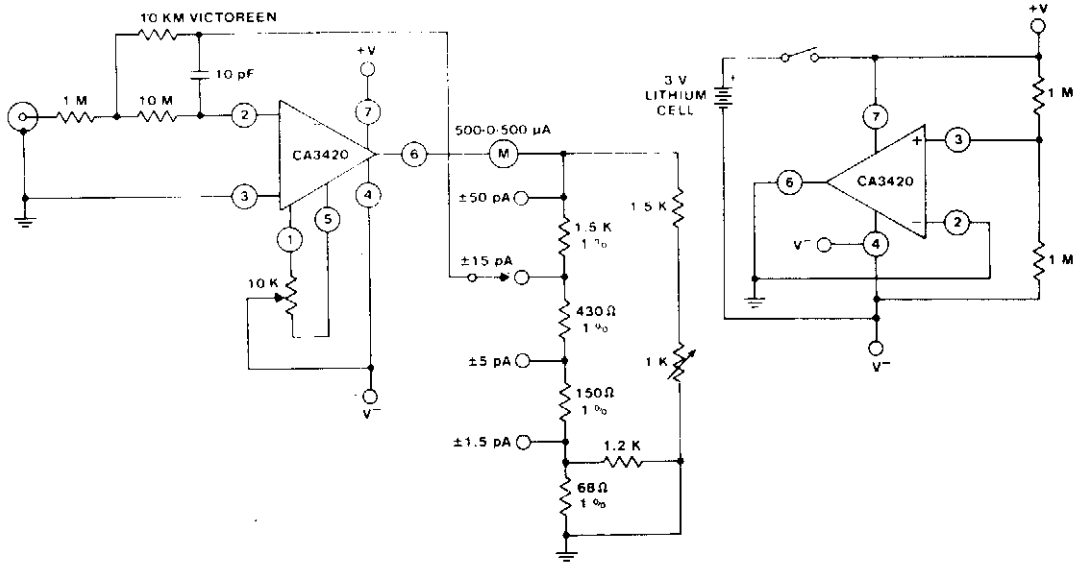

GENERAL ELECTRIC /RCA

Fig. 20-7

Circuit Notes

The circuit uses the exceptionally low input current (0.1pA) of the CA3420 BiMOS op amp. With only a single 10 megohm resistor, the circuit covers the range from ±50 pA maximum to a full-scale sensitivity of ±1.5 pA. Using an additional CA3420, a low-resistance center tap is obtained from a single 3-volt lithium battery.

21
Demodulators

The sources of the following circuits are contained in the Sources section beginning on page 694. The figure number contained in the box of each circuit correlates to the source entry in the Sources section.

Narrow Band FM Demodulator with Carrier Detect
Stereo Demodulator
AM Demodulator
FM Demodulator

NARROW BAND FM DEMODULATOR WITH CARRIER DETECT

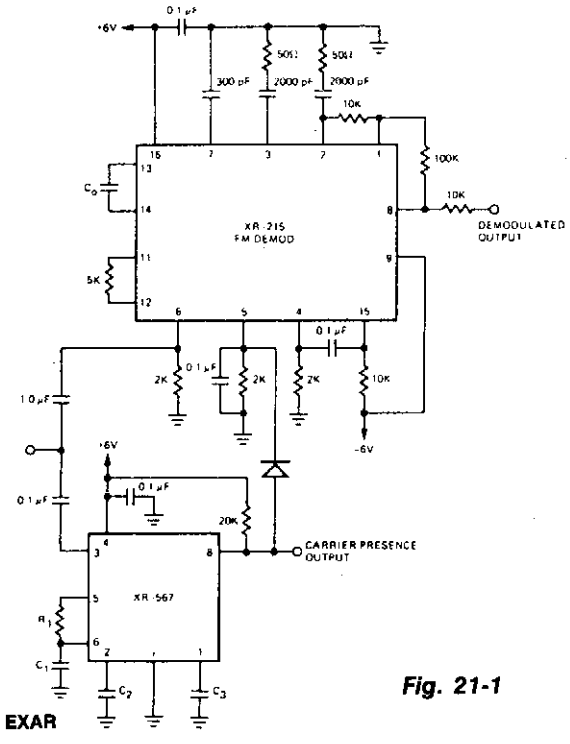

EXAR

Fig. 21-1

Circuit Notes

For FM demodulation applications where the bandwidth is less than 10% of the carrier frequency, an XR-567 can be used to detect the presence of the carrier signal. The output of the XR-567 is used to turn off the FM demodulator when no carrier is present, thus acting as a squelch. In the circuit shown, an XR-215 FM demodulator is used because of its wide dynamic range, high signal/noise ratio and low distortion. The XR-567 will detect the presence of a carrier at frequencies up to 500 kHz.

STEREO DEMODULATOR

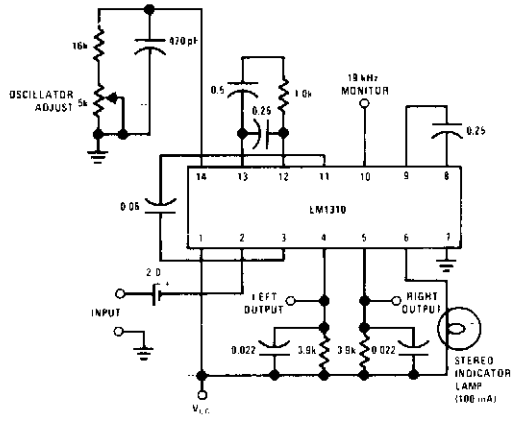

NATIONAL SEMICONDUCTOR CORP.

Fig. 21-2

Circuit Notes

This circuit uses a single IC LM1310 to provide left and right outputs from a composite MPX stereo signal. Oscillator adjust R1 is set for 76 kHz (19 kHz at pin 10). C1 should be a silver mica or NPO ceramic capacitor.

AM DEMODULATOR

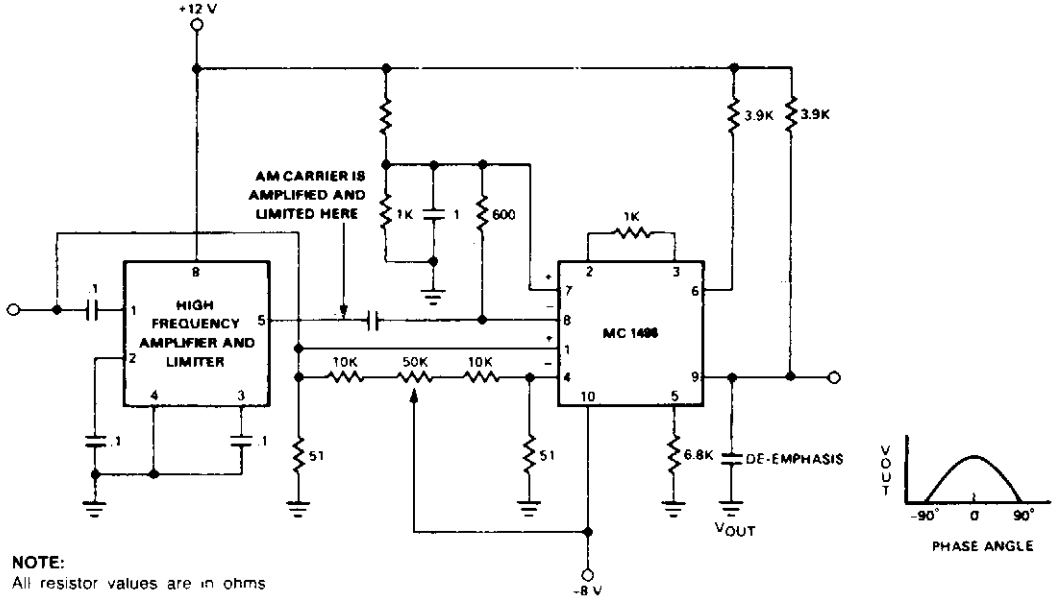

NOTE:
All resistor values are in ohms

Fig. 21-3

SIGNETICS

Circuit Notes

Amplifying and limiting of the AM carrier is accomplished by the if gain block providing 55 dB of gain or higher with a limiting of 40 μV. The limited carrier is then applied to the detector at the carrier ports to provide the desired switching function. The signal is then demodulated by the synchronous AM demodulator (1496) where the carrier frequency is attentuated due to the balanced nature of the device. Care must be taken not to overdrive the signal input so that distortion does not appear in the recorded audio. Maximum conversion gain is reached when the carrier signals are in phase as indicated by the phase-gain relationship. Output filtering is also necessary to remove high frequency sum components of the carrier from the audio signal.

FM DEMODULATOR

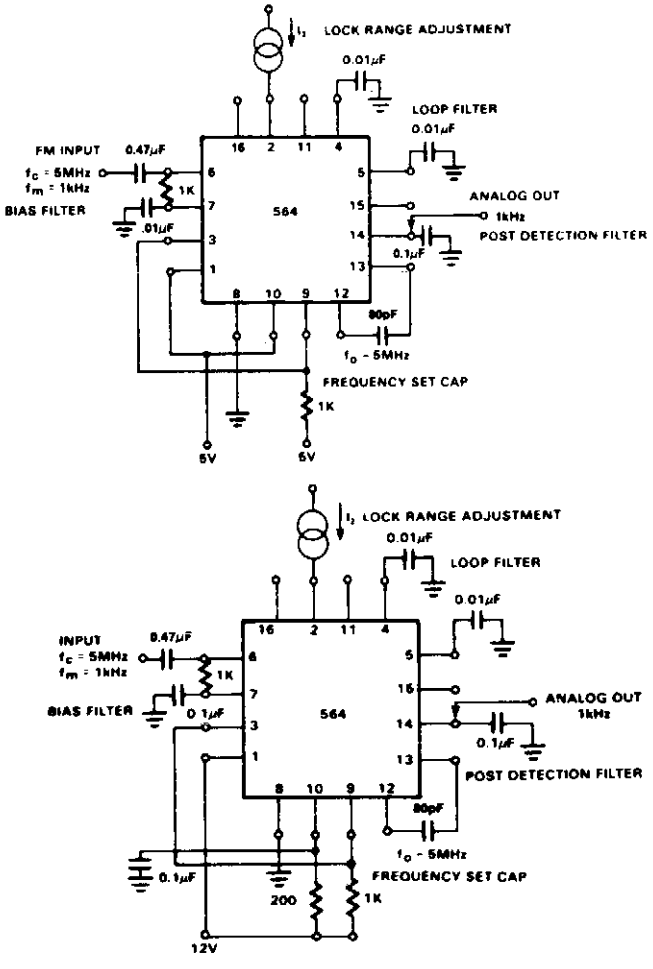

Fig. 21-4

SIGNETICS

Circuit Notes

The NE564 is used as an FM demodulator. The connections for operation at 5 V and 12 V are shown in Figures 21-4A and 21-4B. The input signal is ac coupled with the output signal being extracted at Pin 14. Loop filtering is provided by the capacitors at Pins 4 and 5 with additional filtering being provided by the capacitor at Pin 14. Since the conversion gain of the VCO is not very high, to obtain sufficient demodulated output signal the frequency deviation in the input signal should be 1% or higher.

22
Descramblers and Decoders

The sources of the following circuits are contained in the Sources section beginning on page 694. The figure number contained in the box of each circuit correlates to the source entry in the Sources section.

Sine Wave Descrambler
Outband Descrambler
Gated Pulse Descrambler
SCA Decoder
Dual Time Constant Tone-Decoder
Stereo TV Decoder
Time Division Multiplex (TDM) Stereo Decoder
Frequency Division Multiplex (FDM) Stereo Decoder
SCA (Background Music) Decoder

SINE WAVE DESCRAMBLER

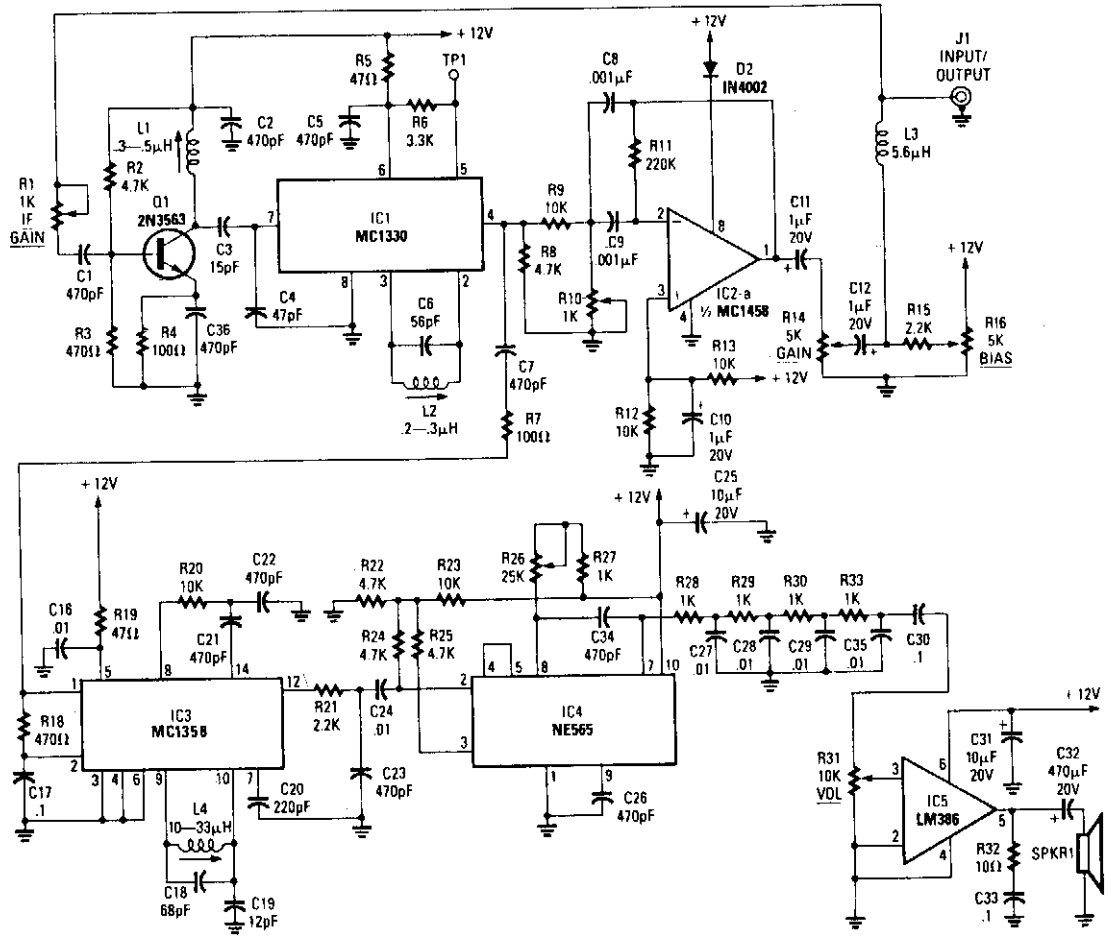

—A COMPLETE SINEWAVE DESCRAMBLER. Easy to build, and relatively easy to align, this circuit completely removes the 15.75-kHz scrambling sinewave.

RADIO-ELECTRONICS

Fig. 22-1

Circuit Notes

This decoder features a sine wave recovery channel and uses a PIN diode attenuator driven by the sine wave recovery system to cancel out the sine wave sync suppression signal. Kit available from North Country Radio, P.O. Box 53, Wykagyl Station, New York 10804.

OUTBAND DESCRAMBLER

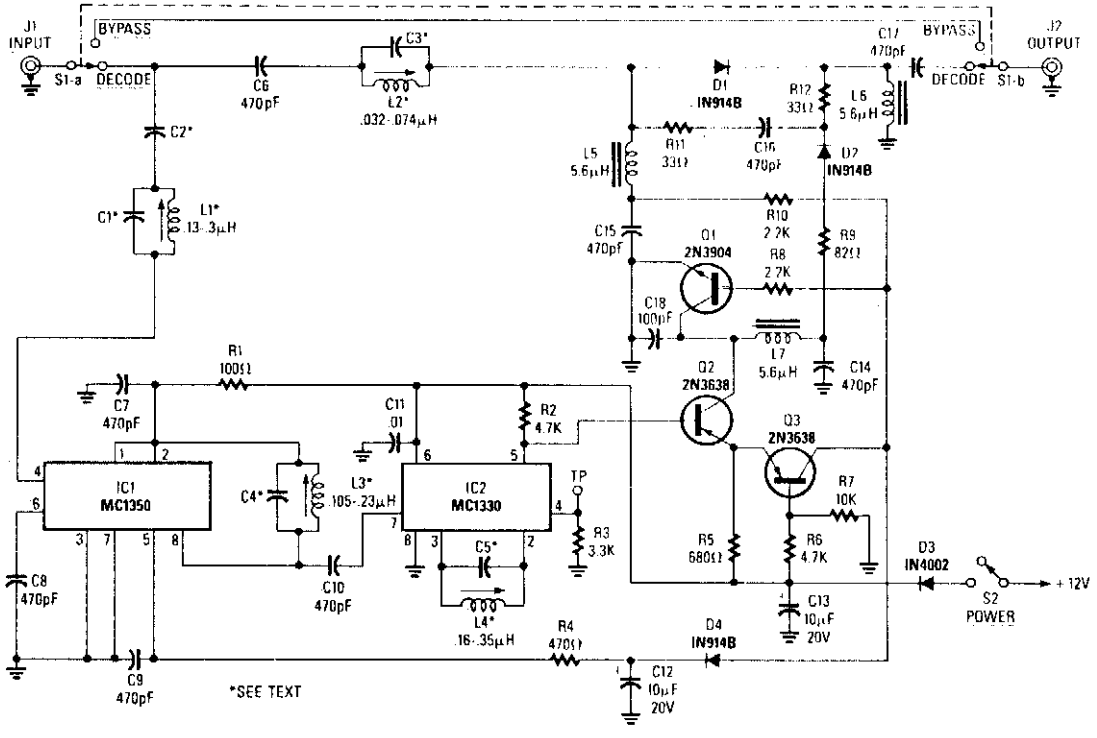

—FOR THE OUTBAND DECODER shown here to work, the cable company must provide at least a 1 millivolt signal. Values for C1–C5 and L1–L4 are found in Table 1.

TABLE 1—CAPACITOR AND COIL VALUES

	50 MHz	90–114 MHz
C1	5 pF	5 pF
C2	47 pF	12 pF
C3	200 pF	82 pF
C4	56 pF	12 pF
C5	56 pF	10 pF
L1	0.2 µH	0.2 µH
L2	0.05 µH	0.03 µH
L3	0.175 µH	0.2 µH
L4	0.175 µH	0.24 µH

Fig. 22-2

Circuit Notes

This circuit consists of an amplifier for the synch channel and a video detector which controls an attenuator so that the gain of the systems is increased during synch intervals. Kit available from North Country Radio, P.O. Box 53, Wykagyl Station, New York 10804.

GATED PULSE DESCRAMBLER

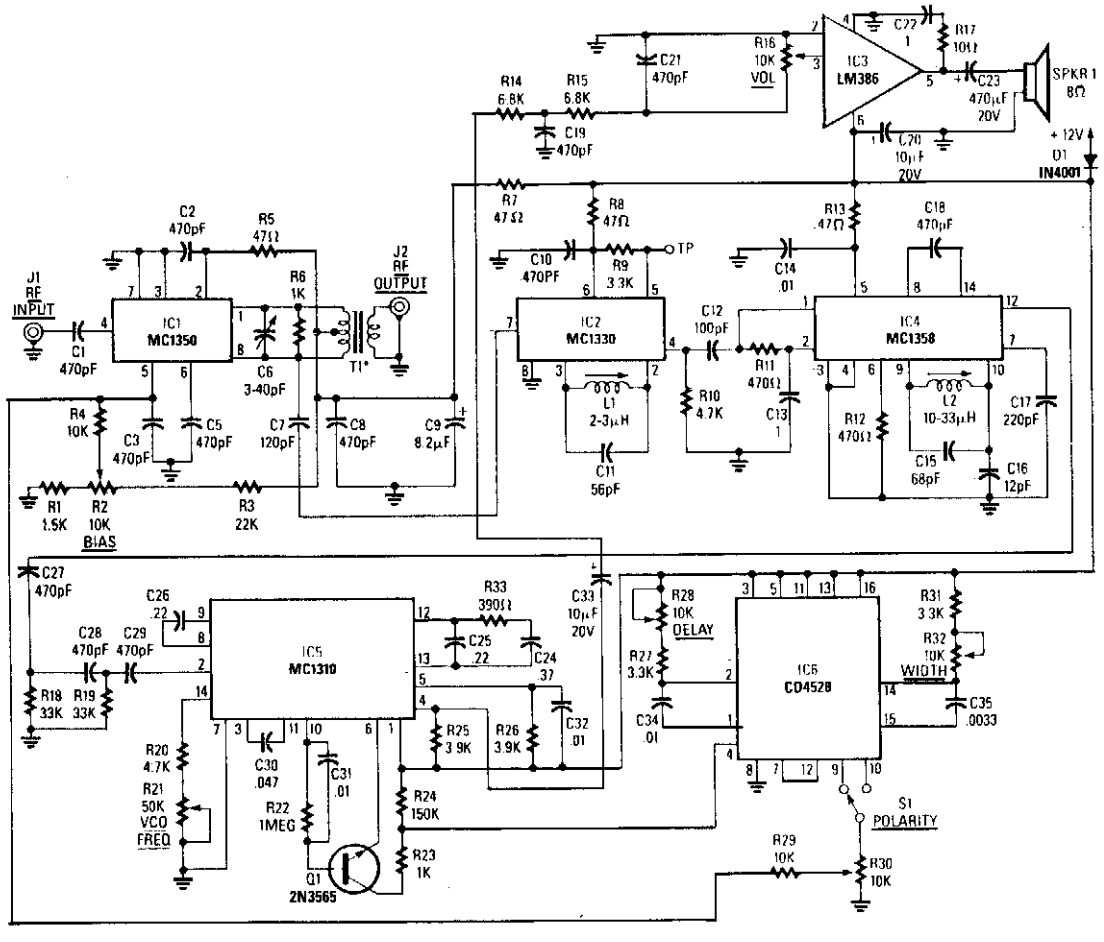

—DESCRAMBLE GATED-PULSE SIGNALS using this easy-to-build circuit. Information for winding transformer T1 and coil L1 can be found in the text.

RADIO-ELECTRONICS

Fig. 22-3

Circuit Notes

This circuit consists of an amplifier and video detector with a second subcarrier detector for synch recovery purposes. A pulse-former circuit modulates the gain of the main channel increasing it during synch intervals. Provision for subcarrier audio descrambling is also provided. Kit available from North Country Radio, P.O. Box 53, Wykagyl Station, New York 10804.

SCA DECODER

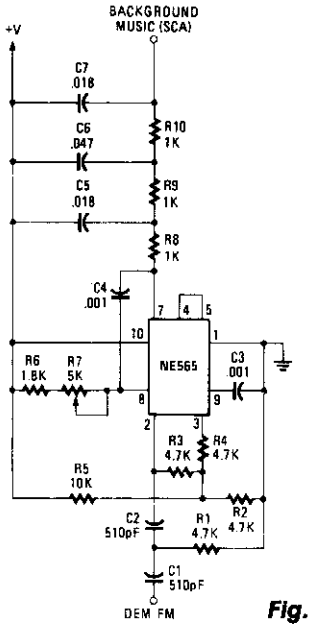

Fig. 22-4

RADIO-ELECTRONICS

Circuit Notes

The circuit uses a Signetics NE565 PLL (Phase-Locked Loop) as a detector to recover the SCA signal. The input to the SCA decoder circuit is connected to an FM receiver at a point between the FM discriminator and the de-emphasis filter network. The PLL, IC1, is tuned to 67 kHz by R7, a 5 K potentiometer. Tuning need not be exact since the circuit will seek and lock onto the subcarrier. The demodulated signal from the FM receiver is fed to the input of the 565 through a high-pass filter consisting of two 510 pF capacitors (C1 and C2) and a 4.7 K resistor (R1). Its purpose is to serve as a coupling network and to attenuate some of the main channel spill. The demodulated SCA signal at pin 7 passes through a three-stage de-emphasis network as shown. The resulting signal is around 50 mV, with the response extending to around 7 kHz.

DUAL TIME CONSTANT TONE DECODER

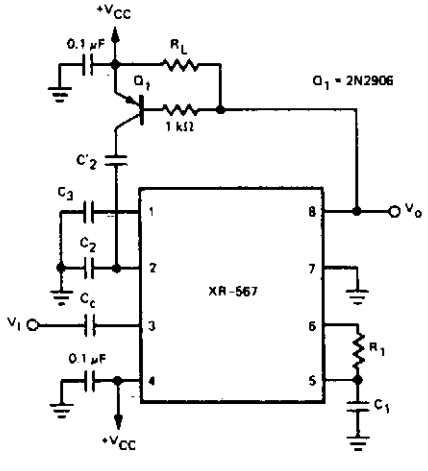

EXAR

Fig. 22-5

Circuit Notes

For some applications it is important to have a tone decoder with narrow bandwidth and fast response time. This can be accomplished by the dual time constant tone decoder circuit shown. The circuit has two low-pass loop filter capacitors, C_2 and C'_2. With no input signal present, the output at pin 8 is high, transistor Q_1 is off, and C'_2 is switched out of the circuit. Thus, the loop low-pass filter is comprised of C_2, which can be kept as small as possible for minimum response time. When an in-band signal is detected, the output at pin 8 will go low, Q_1 will turn on, and capacitor C'_2 will be switched in parallel with capacitor C_2. The low-pass filter capacitance will then be $C_2 + C'_2$. The value of C'_2 can be quite large in order to achieve narrow bandwidth. During the time that no input signal is being received, the bandwidth is determined by capacitor C_2.

STEREO TV DECODER

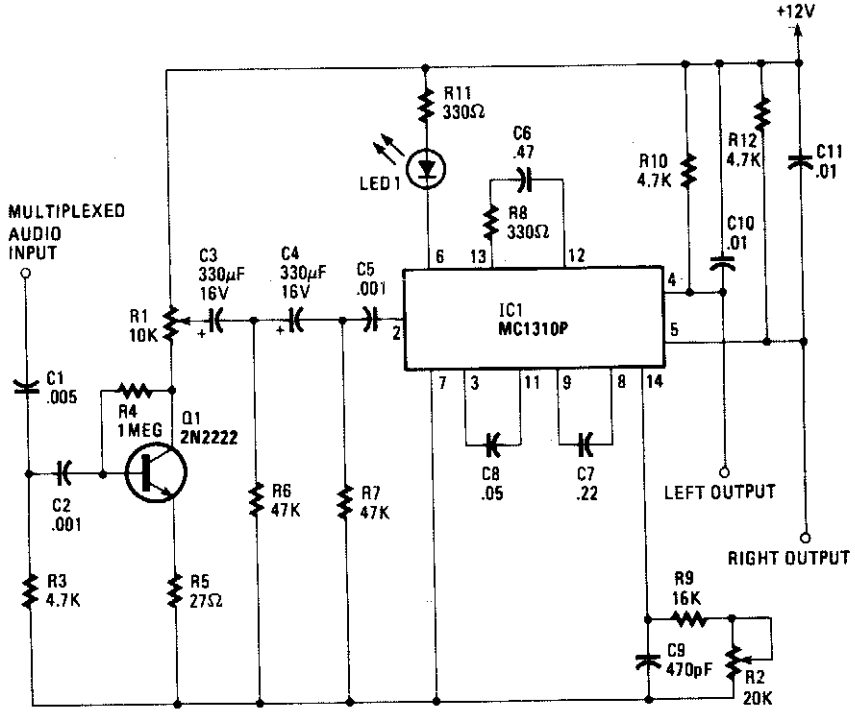

RADIO-ELECTRONICS

Fig. 22-6

Circuit Notes

The composite input signal is preamplified by transistor Q1 and is then coupled to the high-pass filter composed of C3, C4, R6, and R7. The filtered audio is then passed to IC1, an MC1310P "Coilless Stereo Demodulator." That IC is normally used to demodulate broadcast-band FM signals, but by changing the frequency of its on-board VCO (Voltage Controlled Oscillator) slightly (from 19 kHz to 15.734 kHz), we can use that IC to detect stereo-TV signals. A block diagram of the MC1310P is shown in Fig. 22-5. Notice that the components connected to pin 14 control the VCO's frequency, hence the pilot-detect and carrier frequencies. For use in an FM receiver, the VCO would run at four times the 19 kHz pilot frequency (76 kHz), but for our application, it will run at four times the 15.734 kHz pilot frequency of stereo TV, or 62.936 kHz. The MC1310P divides the master VCO signal by two in order to supply the 31.468 kHz carrier that is used to detect the L – R audio signal. The L – R signal undergoes normal FM detection, and at that point we've got two audio signals: L + R and L – R. The decoder block in the IC performs the addition and subtraction to produce the separate left and right signals. R10 and C10 form a de-emphasis network that compensates for the 75 μs pre-emphasis that the left channel underwent; R12 and C11 perform the same function for the right channel.

TIME DIVISION MULTIPLEX (TDM) STEREO DECODER

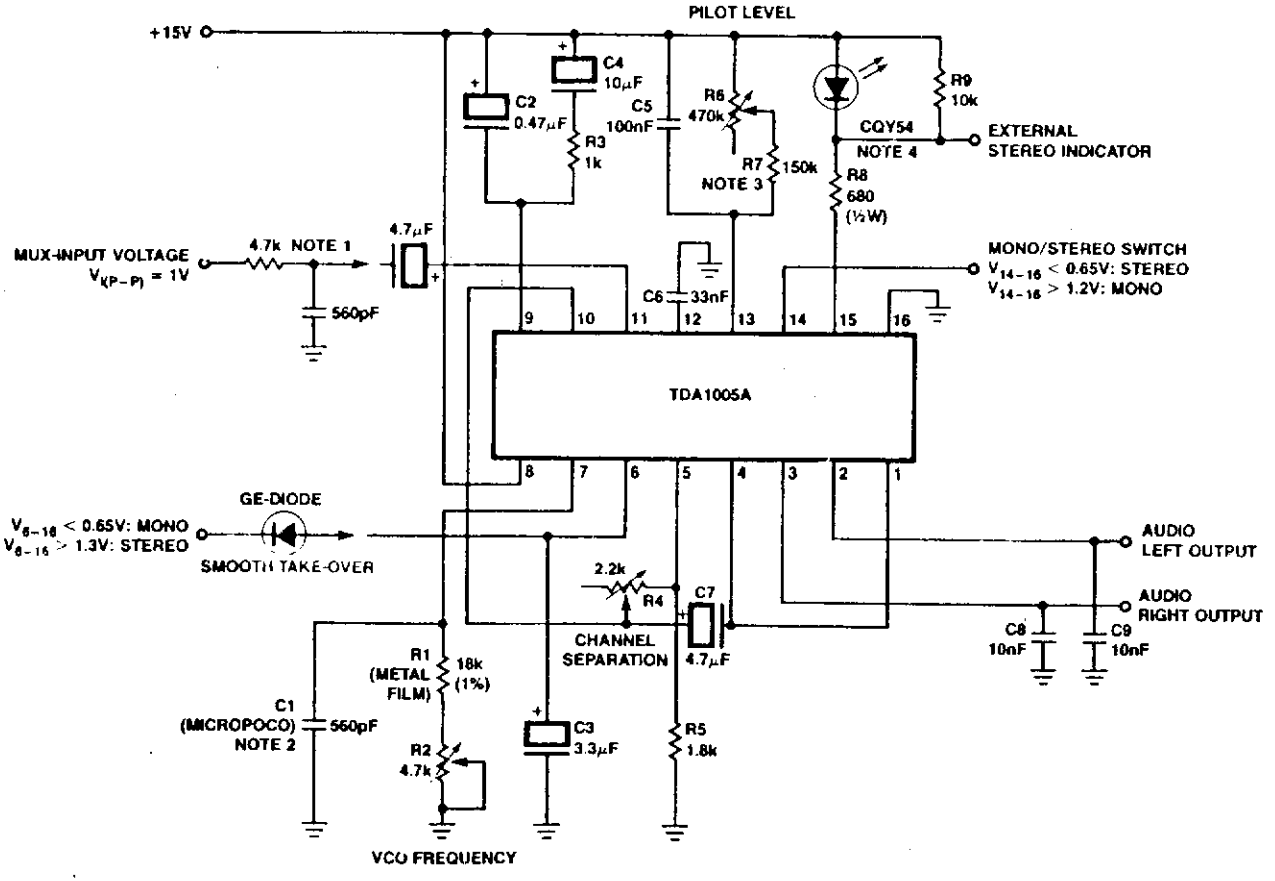

NOTES:

1. For other input structures see Figures 7 to 11, shown here with RC-filter (Figure 8).
2. Micropoco capacitor has a temperature coefficient of $125.10^{-6} \pm 60.10^{-6}°C^{-1}$.
3. In simplified circuits a fixed resistor (e.g. 620k) can be used for a guaranteed switching level of ≤ 16mV.
4. Either the LED circuit or an external stereo indicator can be used.

SIGNETICS

Fig. 22-7

FREQUENCY DIVISION MULTIPLEX (FDM) STEREO DECODER

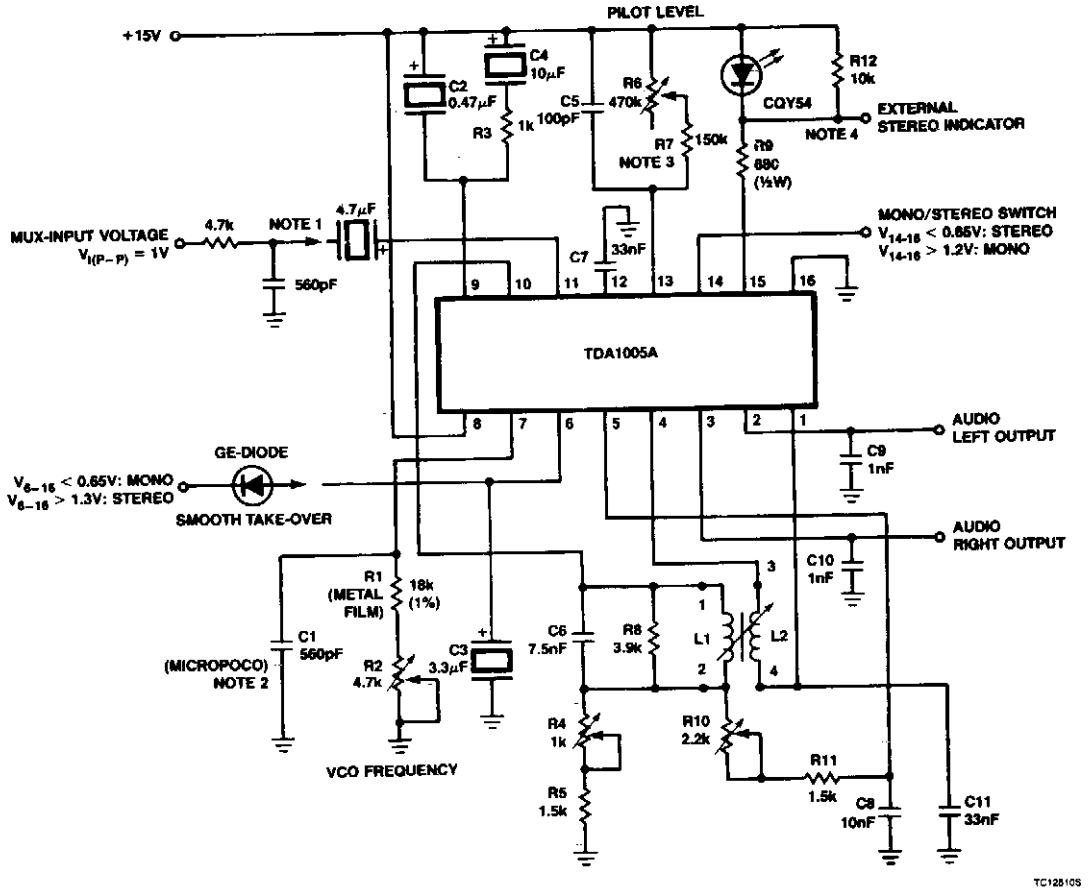

Coil data:
L_1 L_2 = 2.6mH
Q_{1-2} = 35; Q_{MIN} = 30
N_{1-2} = 357½ turns;
N_{3-4} = 297½ turns: scrambled wound with wire diameter 0.09mm, $\frac{E_{3-4}}{E_{1-2}} \times 100\% = 82\%$

NOTES:
1. For other input structures see Figures 6 to 11; shown here with RC-filter (Figure 8).
2. The micropoco capacitor has a temperature coefficient of $125.10^{-6} \pm 60.10^{-6}$ k^{-1}.
3. In simplified circuits a fixed resistor (e.g. 620k) can be used for a guaranteed switching level of ≤ 16mV.
4. Either the LED circuit or an external stereo indicator can be used.

SIGNETICS

Fig. 22-8

SCA (Background Music) DECODER

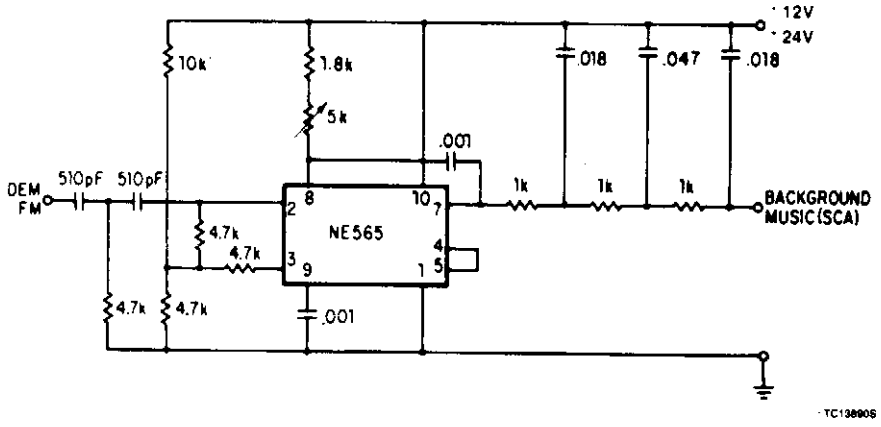

SIGNETICS

Fig. 22-9

Circuit Notes

A resistive voltage divider is used to establish a bias voltage for the input (Pins 2 and 3). The demodulated (multiplex) FM signal is fed to the input through a two-stage high-pass filter, both to effect capacitive coupling and to attenuate the strong signal of the regular channel. A total signal amplitude, between 80 mV and 300 mV, is required at the input. Its source should have an impedance of less than 10,000 ohm. The Phase-Locked Loop is tuned to 67 kHz with a 5000 ohm potentiometer, only approximate tuning is required since the loop will seek the signal. The demodulated output (Pin 7) passes through a three-stage low-pass filter to provide de-emphasis and attenuate the high-frequency noise which often accompanies SCA transmission. Note that no capacitor is provided directly at Pin 7; thus, the circuit is operating as a first-order loop. The demodulated output signal is in the order of 50 mV and the frequency response extends to 7 kHz.

23

Detectors

The sources of the following circuits are contained in the Sources section beginning on page 694. The figure number contained in the box of each circuit correlates to the source entry in the Sources section.

Pulse Sequence Detector
Voltage Level Detector
Zero-Crossing Detector
Peak Detector
Level Detector
High Frequency Peak Detector
Tachometer, Single Pulse Generator, Power Loss Detector, Peak Detector
Phase Detector with 10-Bit Accuracy
Frequency Limit Detector
Pulse Coincidence Detector

PULSE SEQUENCE DETECTOR

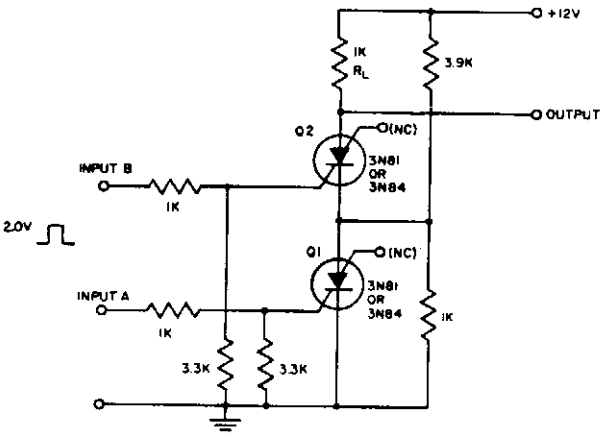

GENERAL ELECTRIC

Fig. 23-1

Circuit Notes

The resistor divider connected between Q1 and Q2 supplies I_H to Q1 after input A triggers it. It also prevents input B from triggering Q2 until Q1 conducts. Consequently, the first B input pulse after input A is applied will supply current to R_L.

VOLTAGE LEVEL DETECTOR

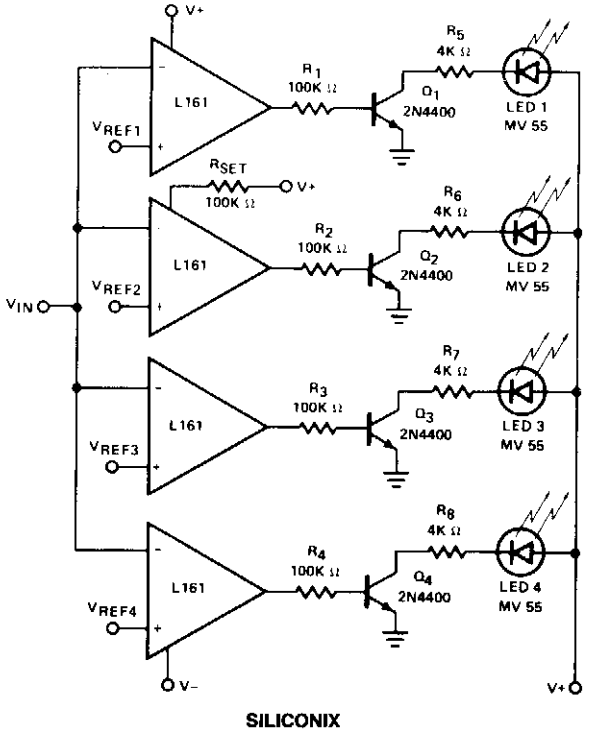

SILICONIX

Fig. 23-2

ZERO-CROSSING DETECTOR

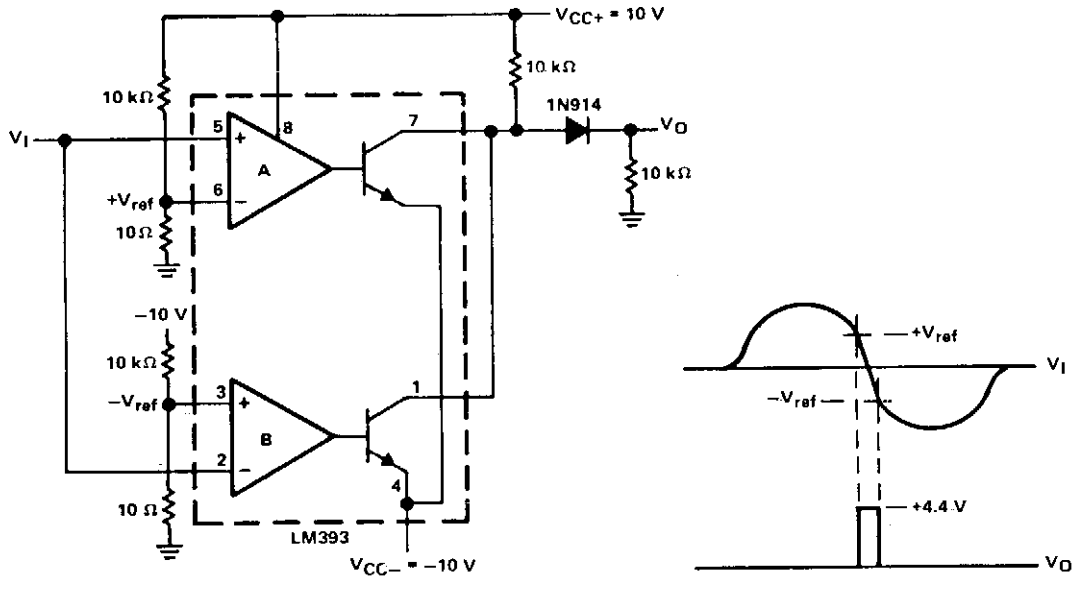

TEXAS INSTRUMENTS

Fig. 23-3

Circuit Notes

This zero-crossing detector uses a dual LM393 comparator, and easily controls hysteresis by the reference levels which are set on the comparator inputs. The circuit illustrated is powered by ±10-V power supplies. The input signal can be an ac signal level up to +8 V. The output will be a positive going pulse of about 4.4 V at the zero-crossover point. These parameters are compatible with TTL logic levels.

The input signal is simultaneously applied to the non-inverting input of comparator A and the inverting input of comparator B. The inverting input of comparator A has a +10 mV reference with respect to ground, while the non-inverting input of comparator B has a −10 mV reference with respect to ground. As the input signal swings positive (greater than +10 mV), the output of comparator "A" will be low while comparator "B" will have a high output. When the input signal swings negative (less than −10 mV), the reverse is true. The result of the combined outputs will be low in either case. On the other hand, when the input signal is between the threshold points (±10 mV around zero crossover), the output of both comparators will be high. If more hysteresis is needed, the ±10 mV window may be made wider by increasing the reference voltages.

PEAK DETECTOR

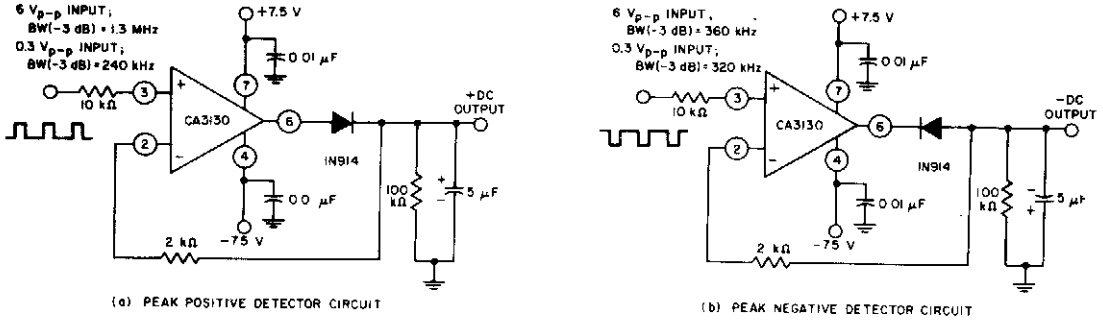

GENERAL ELECTRIC/RCA

Fig. 23-4

Circuit Notes

Circuits are easily implemented using the CA3130 BiMOS op amp. For large-signal inputs the bandwidth of the peak-negative circuit is less than that of the peak-positive circuit. The second stage of the CA3130 limits bandwidth in this case.

LEVEL DETECTOR

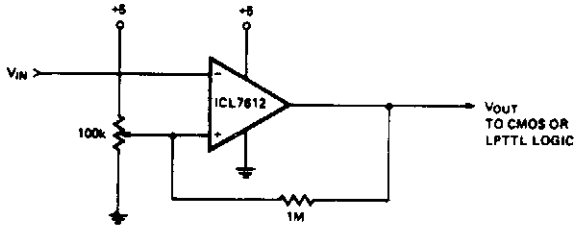

INTERSIL

Fig. 23-5

Circuit Notes

By using the ICL7612 in these applications, the circuits will follow rail to rail inputs.

HIGH FREQUENCY PEAK DETECTOR

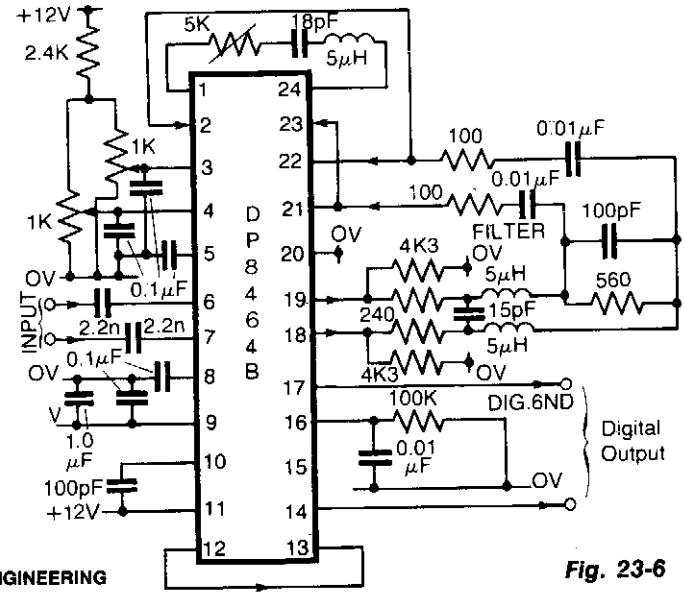

ELECTRONIC ENGINEERING

Fig. 23-6

Circuit Notes

National Semiconductor's DP8464B is primarily intended for use in disk systems as a pulse detector. However it can be easily used as a general purpose peak detector for analogue signals up to 5 MHz. The chip can handle signals between 20 and 66 mV peak-to-peak. The circuit includes a filter with constant group delay characteristics to band limit the signal. Typically the −3 dB point for this filter will be at about 1.5 times the highest frequency of interest. This differentiator network between pins 1 and 24 can be as simple as a capacitor, or can be more complex to band limit the differentiator response.

TACHOMETER, SINGLE PULSE GENERATOR, POWER LOSS DETECTOR, PEAK DETECTOR

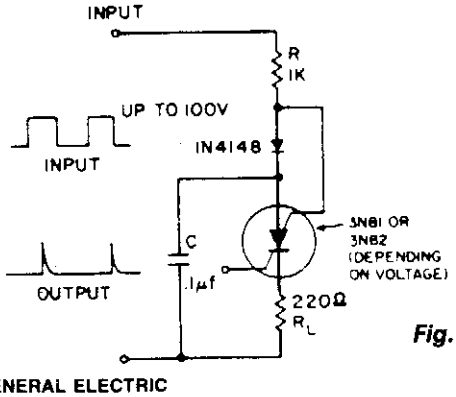

Fig. 23-7

A positive going input charges C through the IN4148 and R. The diode keeps the scs off. A negative going input supplies anode-gate current triggering on the scs discharging C through R_L.

GENERAL ELECTRIC

PHASE DETECTOR WITH 10-BIT ACCURACY

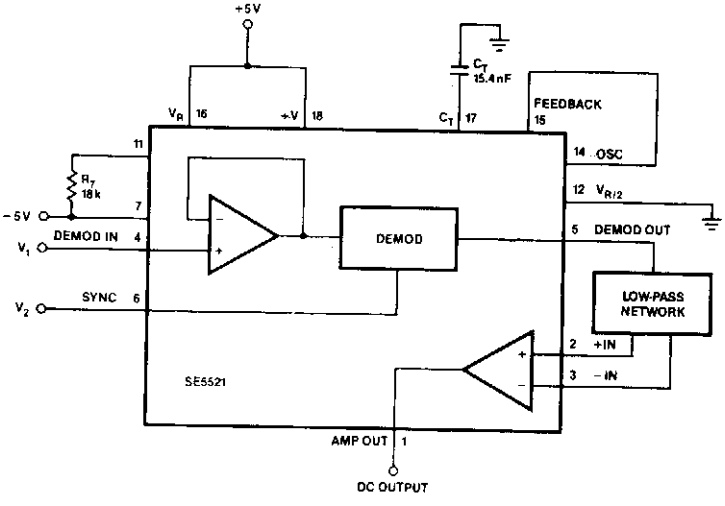

a. Phase Detector Measures Phase Difference Between Signals V_1 and V_2 and Provides dc Output at Pin 1

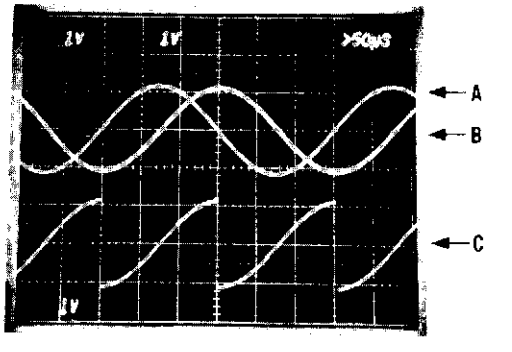

b. When V_1 and V_2 in (a) are at Quadrature (Traces A and B), the DC Component of Demodulator Output (Trace C) is at 0V

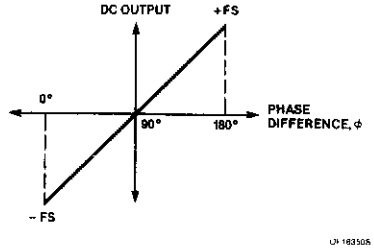

c. The dc Output and Phase Vary Linearly

SIGNETICS

Fig. 23-8

Circuit Notes

Signals of identical frequency are applied to sync input (Pin 6) and to the demodulator input (Pin 4), respectively, the demodulator functions as a phase detector with output dc component being proportional to phase difference between the two inputs. The signals must be referenced to 0 V for dual supply operation or to $V_R/2$ for single supply operation. At ± 5-V supplies, the demodulator can easily handle 7-V peak-to-peak signals. The low-pass network configured with the uncommitted amplifier dc output at Pin 1 of the device. The dc output is maximum (+ full-scale) when V_1 and V_2 are 180° out of phase and minimum (– full-scale) when the signals are in phase.

FREQUENCY LIMIT DETECTOR

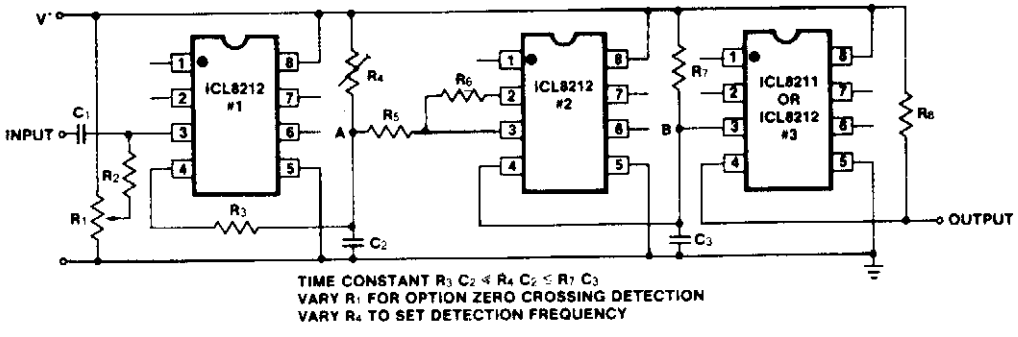

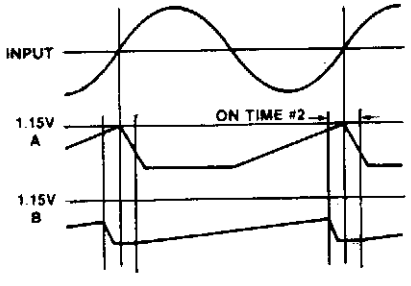

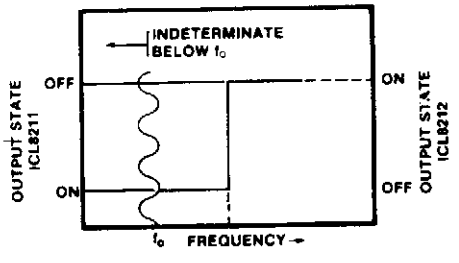

INTERSIL

Fig. 23-9

Circuit Notes

Simple frequency limit detectors providing a GO/NO-GO output for use with varying amplitude input signals may be conveniently implemented with the ICL8211/8212. In the application shown, the first ICL8212 is used as a zero-crossing detector. The output circuit consisting of R_3, R_4 and C_2 results in a slow output positive ramp. The negative range is much faster than the positive range. R_5 and R_6 provide hysteresis so that under all circumstances the second ICL8212 is turned on for sufficient time to discharge C_3. The time constant of R_7C_3 is much greater than R_4C_2. Depending upon the desired output polarities for low and high input frequencies, either an ICL8211 or an ICL8212 may be used as the output driver.

The circuit is sensitive to supply voltage variations and should be used with a stabilized power supply. At very low frequencies the output will switch at the input frequency.

PULSE COINCIDENCE DETECTOR

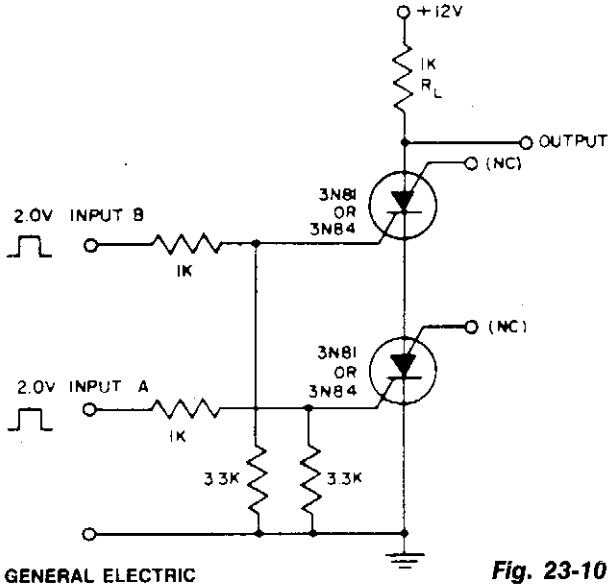

GENERAL ELECTRIC

Fig. 23-10

Circuit Notes

Unless inputs A and B (2- to 3-V amplitude) occur simultaneously no voltage exists across R_L. Less than 1 microsecond overlap is sufficient to trigger the scs. Coincidence of negative inputs is detected with gates G_A instead of G_C by using the scs in a complementary SCR configuration.

24
Digital-to-Analog Converters

The sources of the following circuits are contained in the Sources section beginning on page 694. The figure number contained in the box of each circuit correlates to the source entry in the Sources section.

Two 8-Bit DACs Make a 12-Bit DAC
12-Bit DAC with Variable Step Size

TWO 8-BIT DACS MAKE A 12-BIT DAC

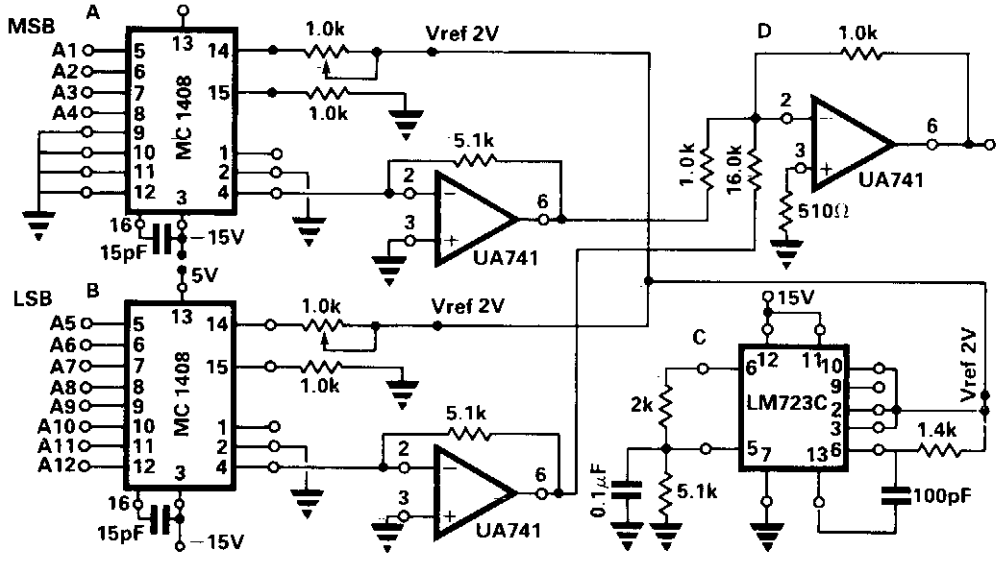

ELECTRONIC ENGINEERING

Fig. 24-1

Circuit Notes

Two MC1408—8-bit D/A converters, A and B in the circuit diagram, are used. The four least-significant bits of A are tied to zero. The four most significant bits of the 12-bit data are connected to the remaining four input pins. The eight least significant bits of the 12-bit data are connected to the eight input pins of B. The four most significant bits of the 12-bit data together have a weight of 16 relative to the remaining eight bits. Hence, the output from B is reduced by a factor of 16 and summed with the output from A using the summing op-amp configuration D. Voltage regulator chip, LM7236, is used to provide an accurate reference voltage, 2 V, for the MC1408. The full-scale voltage of the converter is $\frac{1}{16} \times 9.9609 + 1 \times (9.375)$ or 9.9976 V. The step size of the converter is 2.4 mV.

12-BIT DAC WITH VARIABLE STEP SIZE

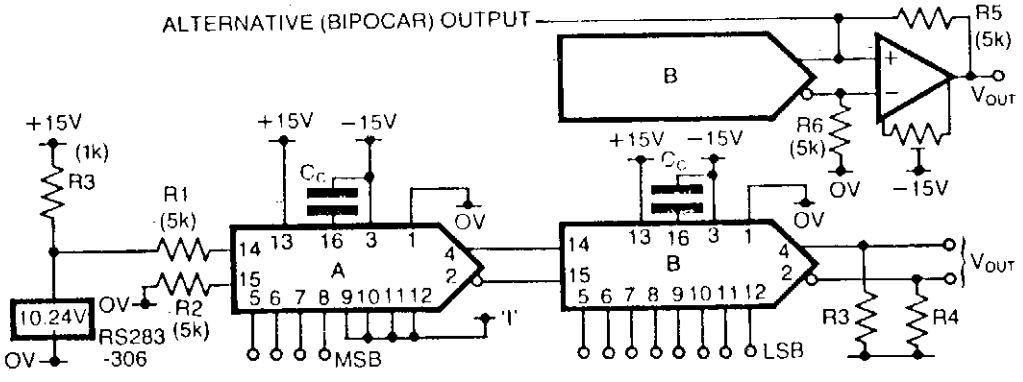

ELECTRONIC ENGINEERING

Fig. 24-2

Circuit Notes

The step size of the converter is variable by selection of the high order data bits. The first DAC, A, has a stable reference current supplied via the 10.24 V reference IC and R1. R2 provides bias cancellation. As shown, only the first 4 MSB inputs are used, giving a step size of 225/256 × 2.048/16 = 0.127 mA. This current supplies the reference for DAC B whose step size is then 0.1275/256 = 0.498 μA. Complementary voltage outputs are available for unipolar output and using R3 = R4 = 10 K, V_{out} is ±10.2 V approximately, with a step size (1 LSB) of approximately 5 mV. If desired an op amp can be added to the output to provide a low impedance output with bipolar output symmetrical about ground, if R5 = R6 within 0.05%. Note that offset null is required, and all resistors except R2 and R3 should be 1% high stability types.

By using lower order address lines than illustrated for DAC A, a smaller step size (and therefore full-scale output) can be obtained. Unused high order bits can be manipulated high or low to change the relative position of the full-scale output.

25
Dip Meters

The sources of the following circuits are contained in the Sources section beginning on page 694. The figure number contained in the box of each circuit correlates to the source entry in the Sources section.

Little Dipper

LITTLE DIPPER

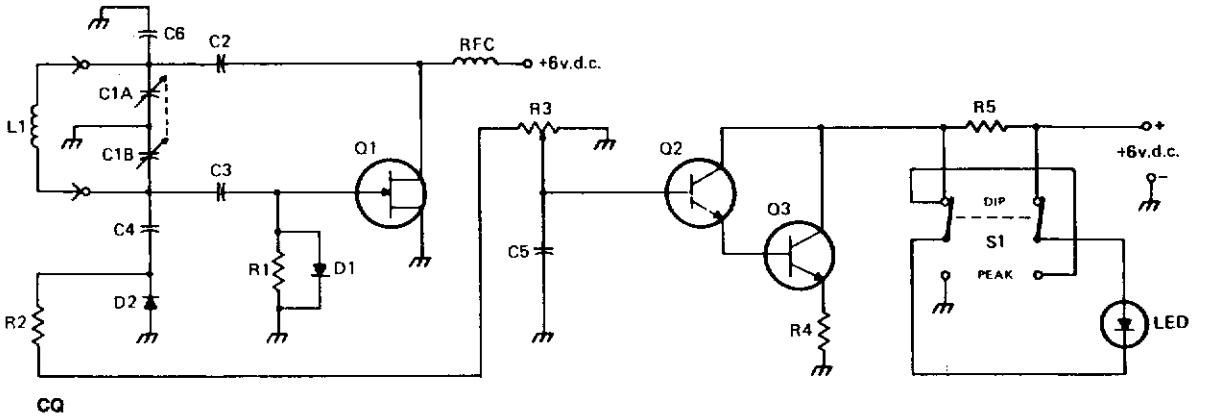

Parts List

L1—See coil data.
C1A,1B—Dual capacitor 100 pF per section (ETCO SV409 or similar)
C2,C3—100 pF mica, mylar, etc., low voltage
C4—10 pF mica, mylar, etc., low voltage
C5—.01 uF ceramic, low voltage
C6—5 pF mica, mylar, etc., low voltage
D1,D2—1N914 silicon diode or similar
R1—100 K ohms ¼ watt
R2—220 K ohms ¼ watt
R3—500 K ohms potentiometer
R4—10 ohms ¼ watt
R5—270 ohms ¼ watt
Q1—MPF 102 FET
Q2—Any general-purpose NPN transistor with a Beta (Hfe) of 40 or so (2N3904 or similar)
Q3—Any general-purpose NPN transistor capable of 20 mA collector current or more, Beta 40 or so (2N3904, 2N2222 or similar)
RFC—1 mH miniature ferrite core choke (value not critical)
LED—Panel mounting LED Radio Shack 276-068 or similar.
SW1—Sub-miniature DPDT slide switch or similar

Miscellaneous—6 volt AC adapter (Radio Shack 273-1454A)
Coaxial DC power jack (RS 274-1565)
Calibrated Dial knob (RS 274-413)
Dual phono jack (RS 274-332)

Fig. 25-1

Circuit Notes

The circuit consists of two basic circuits, the oscillator and the detector. The oscillator uses an FET in a Colpitts configuration. The energy circulating in the oscillator tank is coupled through C4 to the detector circuit, where a small diode (D2) rectifies it, feeding a dc voltage to the Darlington pair (Q2, A3) controlled by the sensitivity control (R3). Any small variations in the bias of the amplifier will cause large variations of current through the LED indicator in the DIP mode; however, in the PEAK mode the current produces a corresponding voltage drop through R5 and the action of the LED is reversed. The circuit shown will work practically on any frequency from LF to VHF if the appropriate components are used.

26
Display Circuits

The sources of the following circuits are contained in the Sources section beginning on page 694. The figure number contained in the box of each circuit correlates to the source entry in the Sources section.

Vacuum Fluorescent Display
Expanded Scale Meter, Dot or Bar
Low-Cost Bar-Graph Indicator for ac Signals
LED Bar-Graph Driver

VACUUM FLUORESCENT DISPLAY

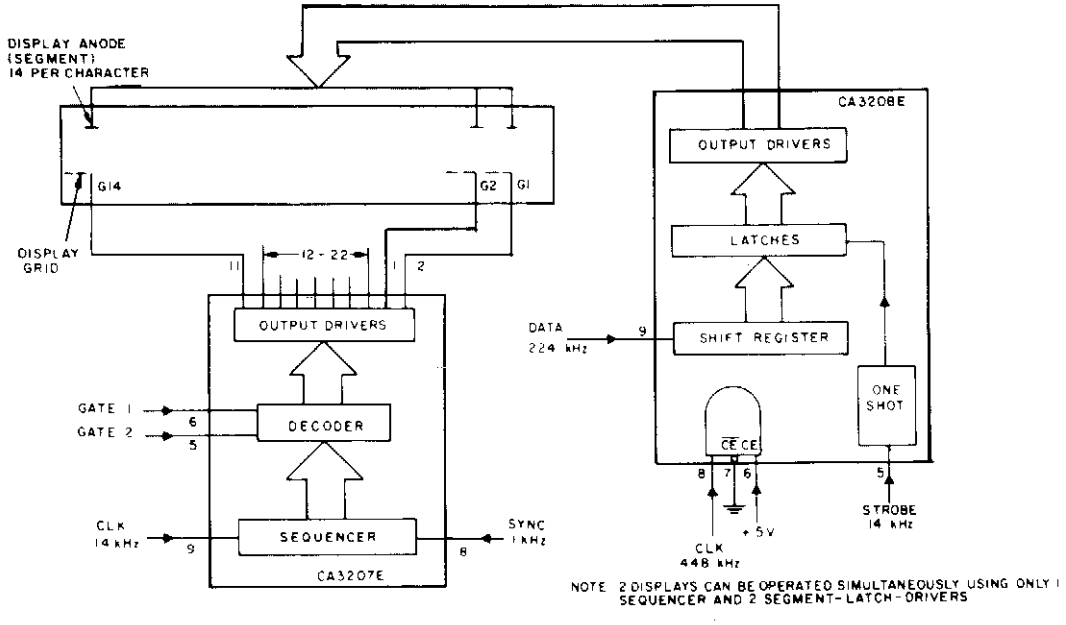

GENERAL ELECTRIC/RCA

Fig. 26-1

This circuit uses the CA3207 sequence driver and CA3208 segment latch-driver in combination to drive display devices of up to 14 segments with up to 14 characters of display. The CA3207 selects the digit or character to be displayed in sequence, CA3208 turns on the required alphanumeric segments.

EXPANDED SCALE METER, DOT OR BAR

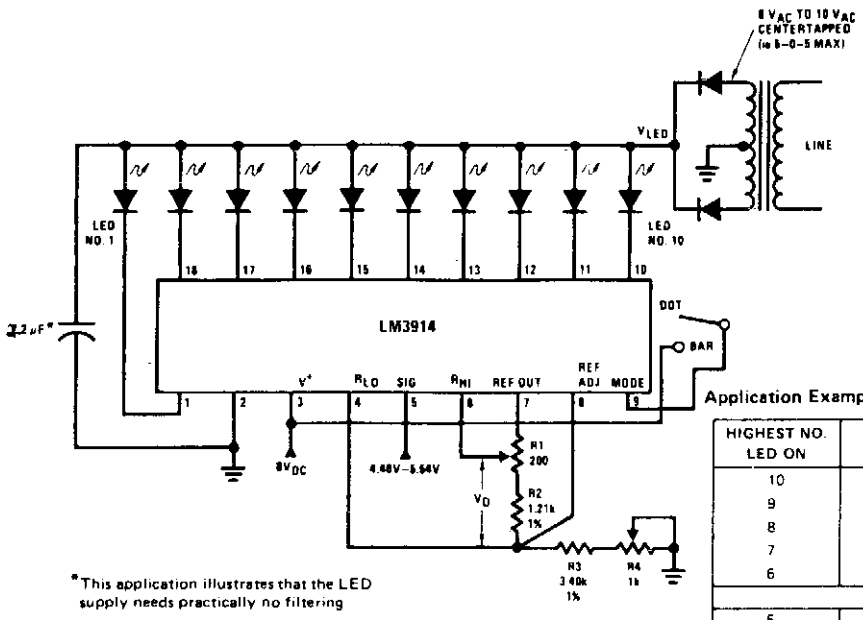

*This application illustrates that the LED supply needs practically no filtering

Calibration: With a precision meter between pins 4 and 6 adjust R1 for voltage V_D of 1.20V. Apply 4.94V to pin 5, and adjust R4 until LED No. 5 just lights. The adjustments are non-interacting.

Application Example: Grading 5V Regulators

HIGHEST NO. LED ON	COLOR	VOUT(MIN)
10	Red	5.54
9	Red	5.42
8	Yellow	5.30
7	Green	5.18
6	Green	5.06
5V		
5	Green	4.94
4	Green	4.82
3	Yellow	4.7
2	Red	4.58
1	Red	4.46

NATIONAL SEMICONDUCTOR CORP.

Fig. 26-2

Circuit Notes

A bar graph driver IC LM314 drives an LED display. The LEDs may be separate or in a combined (integral) bar graph display.

LOW-COST BAR-GRAPH INDICATOR FOR AC SIGNALS

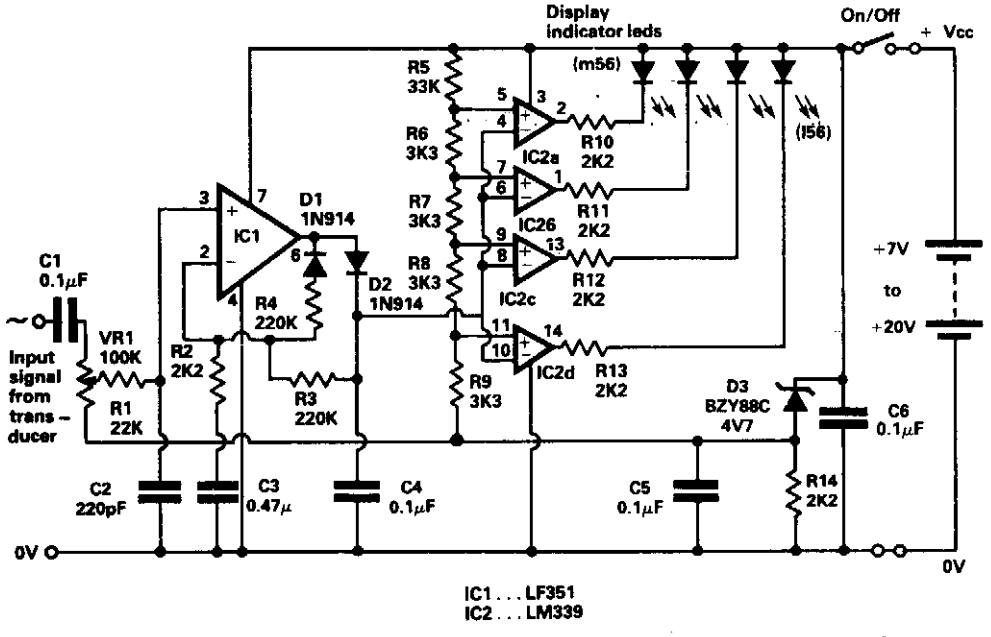

ELECTRONIC ENGINEERING

Fig. 26-3

Circuit Notes

Indicator was designed for displaying the peak level of small ac signals from a variety of transducers including microphones, strain gauges and photodiodes. The circuit responds to input signals contained within the audio frequency spectrum, i.e., 30 Hz to 20 kHz, although a reduced response extends up to 40 kHz. Maximum sensitivity for the component values shown, with VR1 fully clockwise, is 30 mV peak-to-peak. The indicator can be calibrated by setting VR1 when an appropriate input signal is applied.

LED BAR-GRAPH DRIVER

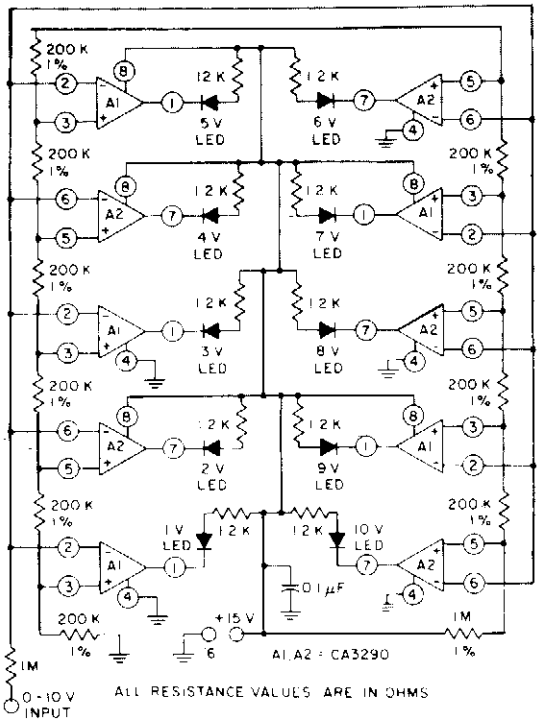

GENERAL ELECTRIC/RCA

Fig. 26-4

Circuit Notes

The circuit uses CA3290 BiMOS dual voltage comparators. Non-inverting inputs of A1 and A2 are tied to voltage divider reference. The input signal is applied to the inverting inputs. LEDs are turned "on" when input voltage the reaches the voltage on the reference divider.

27

Drive Circuits

The sources of the following circuits are contained in the Sources section beginning on page 694. The figure number contained in the box of each circuit correlates to the source entry in the Sources section.

Line Driver Provides Full Rail Excursions
Five Transistor Amplifier Boosts Fast Pulses into 50-Ohm Coaxial Cable
50-Ohm Transmission Line Driver
600-Ohm Balanced Driver for Line Signals
High Output 600-Ohm Line Driver

LINE DRIVER PROVIDES FULL RAIL EXCURSIONS

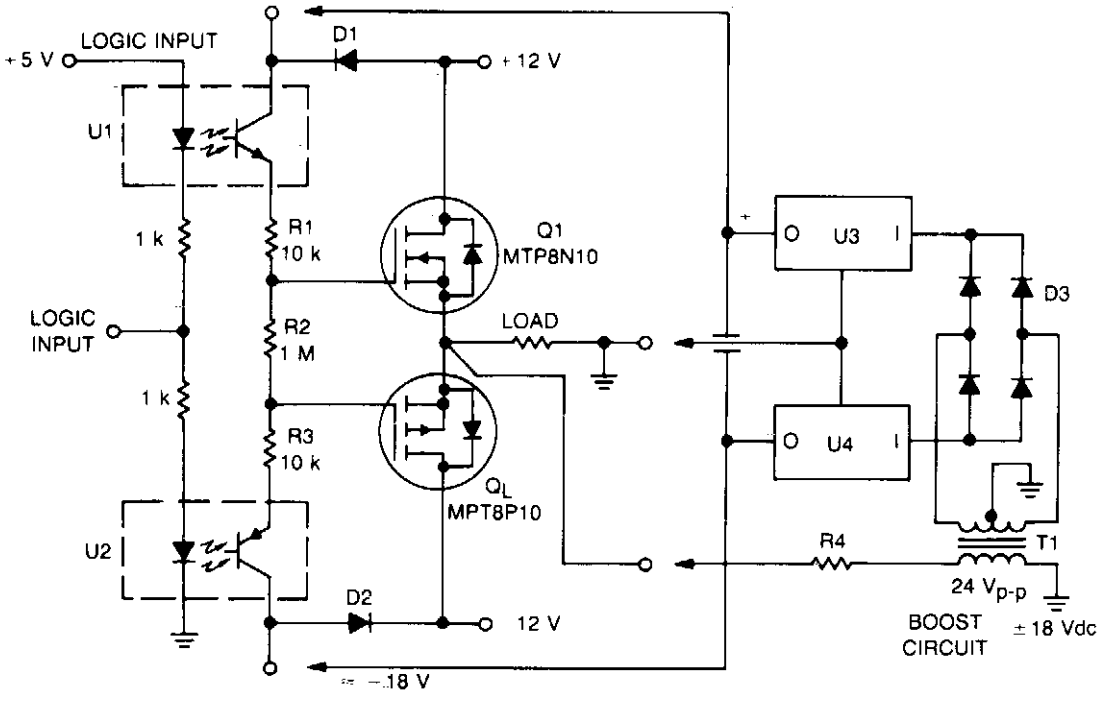

MOTOROLA

Fig. 27-1

Circuit Notes

The logic input is applied to opto-isolators U1 and U2 with, respectively, npn and pnp emitter follower outputs. Dc balance is adjusted by potentiometer R2. The emitter followers drive the gates of Q1 and Q2, the complementary TMOS pairs. With a ±12 V supply, the swing at the common source output point is about 12 V peak-to-peak.

By adding a ±18-V boost circuit, as shown, the output swing can approach the rail swing. This circuit applies the output to transformer T1, which is rectified by diode bridge D3, regulated by U3 and U4, and then applied to the collectors of U1 and U2. Diodes D1 and D2 are forward-biased when 12-V supplies are used, but they are back-biased when the 18-V boost is used.

FIVE-TRANSISTOR AMPLIFIER BOOSTS FAST PULSES INTO 50-OHM COAXIAL CABLE

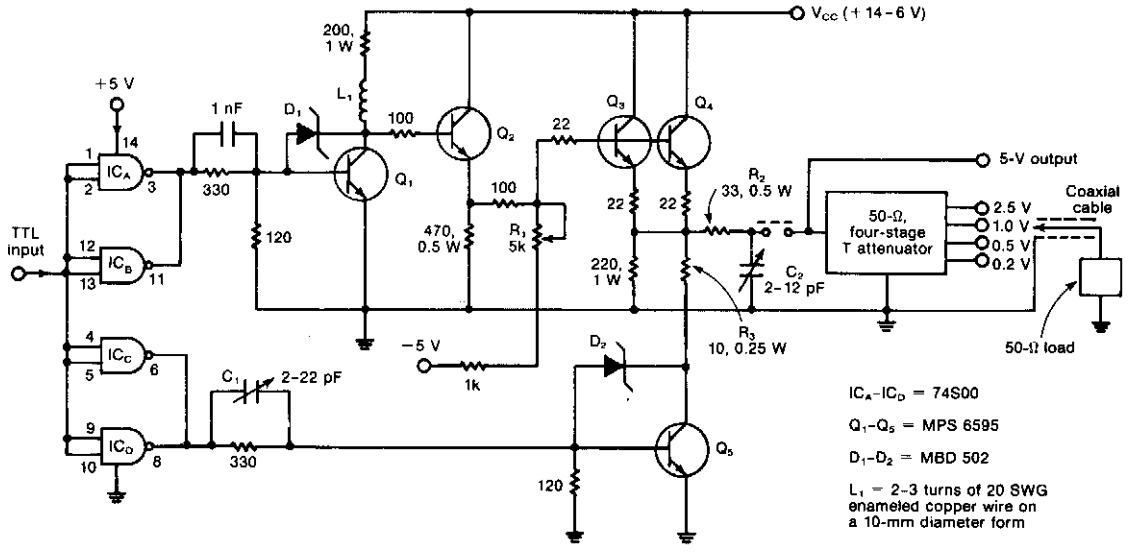

ELECTRONIC DESIGN

Fig. 27-2

Circuit Notes

The circuit works from dc to 50 MHz and will deliver pulses as short as 10 ns. It is driven by a TTL signal through a 740S00 quad Schottky NAND gate, IC_A through IC_D. Transistor Q1, wired as a common-emitter amplifier, drives transistor Q2, a simple emitter follower. Transistors Q3 and Q4, wired in parallel, also form an emitter follower and drive the output. When Q3 and Q4 are both turned off, transistor Q5 works as a low-impedance sink. Schottky diodes D1 and D2 prevent Q1 and Q5 from becoming saturated. To adjust the circuit, potentiometer R1 is set to optimize the output pulse's fall time. Inductor L1, a peaking coil, should be adjusted to improve the rise time to within a permissible 5% overshoot. Likewise, capacitor C1 can be varied to control preshooting. Further output pulse shaping is accomplished with the help of capacitor C2. Resistors R2 and R3 ensure a proper 50-ohm impedance at the amplifier's output when the pulse is on or off, respectively.

50-OHM TRANSMISSION LINE DRIVER

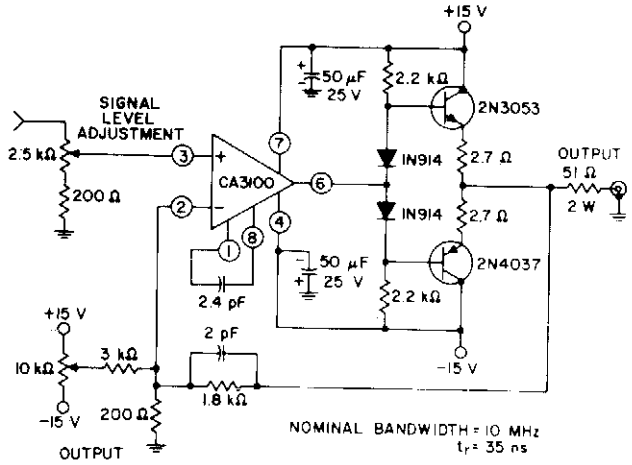

GENERAL ELECTRIC/RCA

Fig. 27-3

Circuit Notes

This circuit uses a wideband, high slew rate CA3100 BiMOS op amp. The slew rate for this amplifier is 28 V/μs. Output swing is 9 volts peak-to-peak into a terminated line, measured at the termination.

600-OHM BALANCED DRIVER FOR LINE SIGNALS

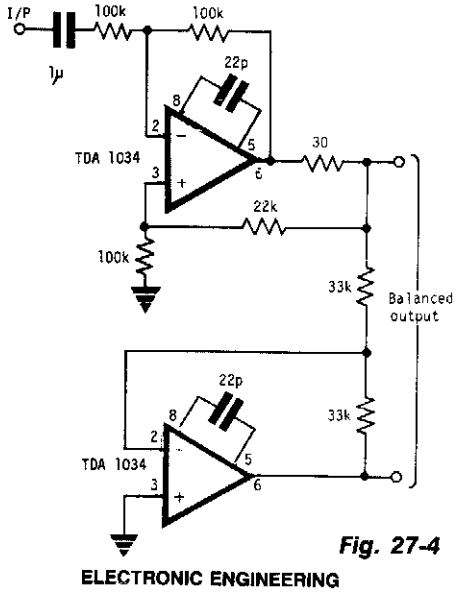

Fig. 27-4

ELECTRONIC ENGINEERING

Circuit Notes

This circuit uses current and voltage feedback. This circuit will handle +24 dBm with ±12 volts supply using TDA 1034s.

HIGH OUTPUT 600-OHM LINE DRIVER

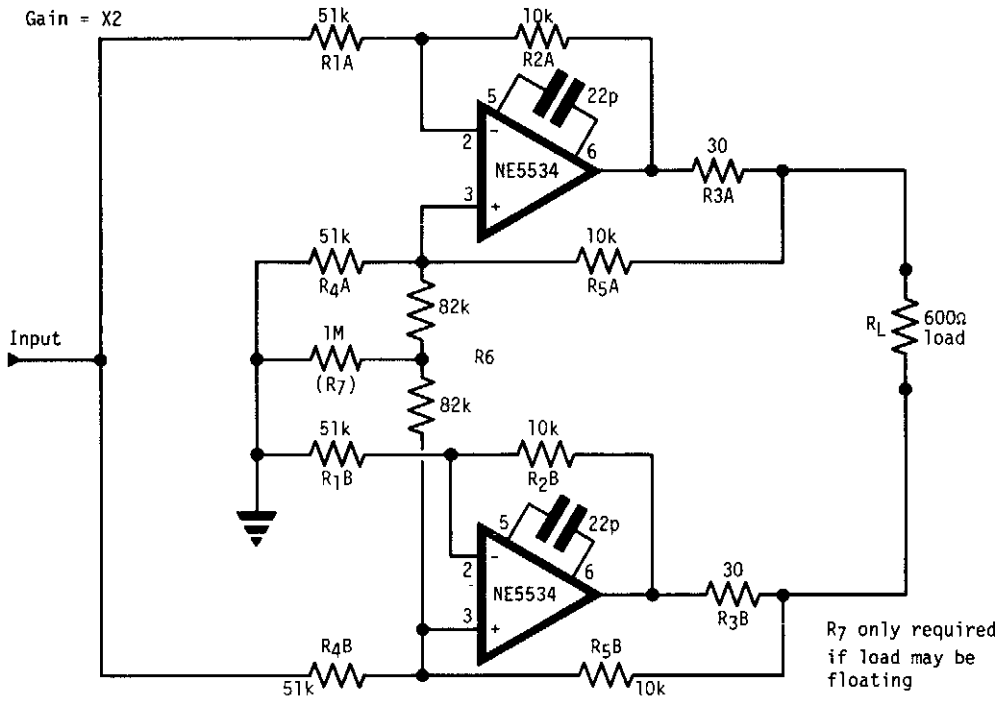

ELECTRONIC ENGINEERING

Fig. 27-5

Circuit Notes

The circuit has a "floating" output, i.e., it behaves like an isolated transformer winding, with the output amplitude remaining unchanged whether the center or either end of the load is grounded. This is achieved by making Z-out, common mode, infinite. The circuit consists of two current-sources in push-pull. Since each has infinite output Z, the common mode output impedance is also infinite. Connecting a resistor between the non-inverting terminals of the op amps reduces the differential Z-out without affecting the Z-common-mode. Since the output is floating, if the load is also floating there is no output ground reference, which results in malfunction. This can be corrected by reducing the common-mode Z slightly. R7 fulfills this function. All resistors should be of close tolerance to give a good balance. The line driver provides +24 dB from ±12 V or +16 dB from ±6 V supplies.

28
Electronic Locks

The sources of the following circuits are contained in the Sources section beginning on page 694. The figure number contained in the box of each circuit correlates to the source entry in the Sources section.

Three-Dial Combination Lock
Electronic Combination Lock

THREE-DIAL COMBINATION LOCK

C1—500-uF, 25-VDC electrolytic capacitor
D1, D2—1N4002 diode
K1—relay with 6-volt coil rated @ 250-ohms, with SPST contacts
Q1—2N5050 SCR
R1, R2—4,700-ohm, ½-watt resistor, 5%
S1, S2, S3—single pole, 10-position rotary or thumbwheel switches
S4—normally closed SPST pushbutton switch
T1—120-VAC to 6.3-VAC @ 300mA power transformer

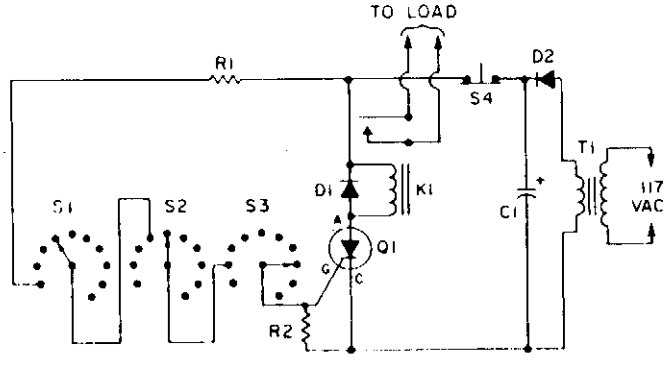

TAB BOOKS, INC.

Fig. 28-1

Circuit Notes

Here's an effective little combination lock that you can put together in one evening's time. To open the lock, simply dial in the correct combination on the three rotary or thumbwheel switches. With the correct combination entered, current flows through R1 into Q1's gate terminal, causing the SCR to latch in a conductive state. This sends a current through relay K1, which responds by closing its contacts and actuating whatever load is attached. After opening the lock, twirl the dials of S1 through S3 away from the correct combination so that nobody gets a look at it. The lock will remain open and your load will remain on because the SCR is latched on. To lock things up, it's only necessary to interrupt the flow of anode current through the SCR by pressing pushbutton S4.

ELECTRONIC COMBINATION LOCK

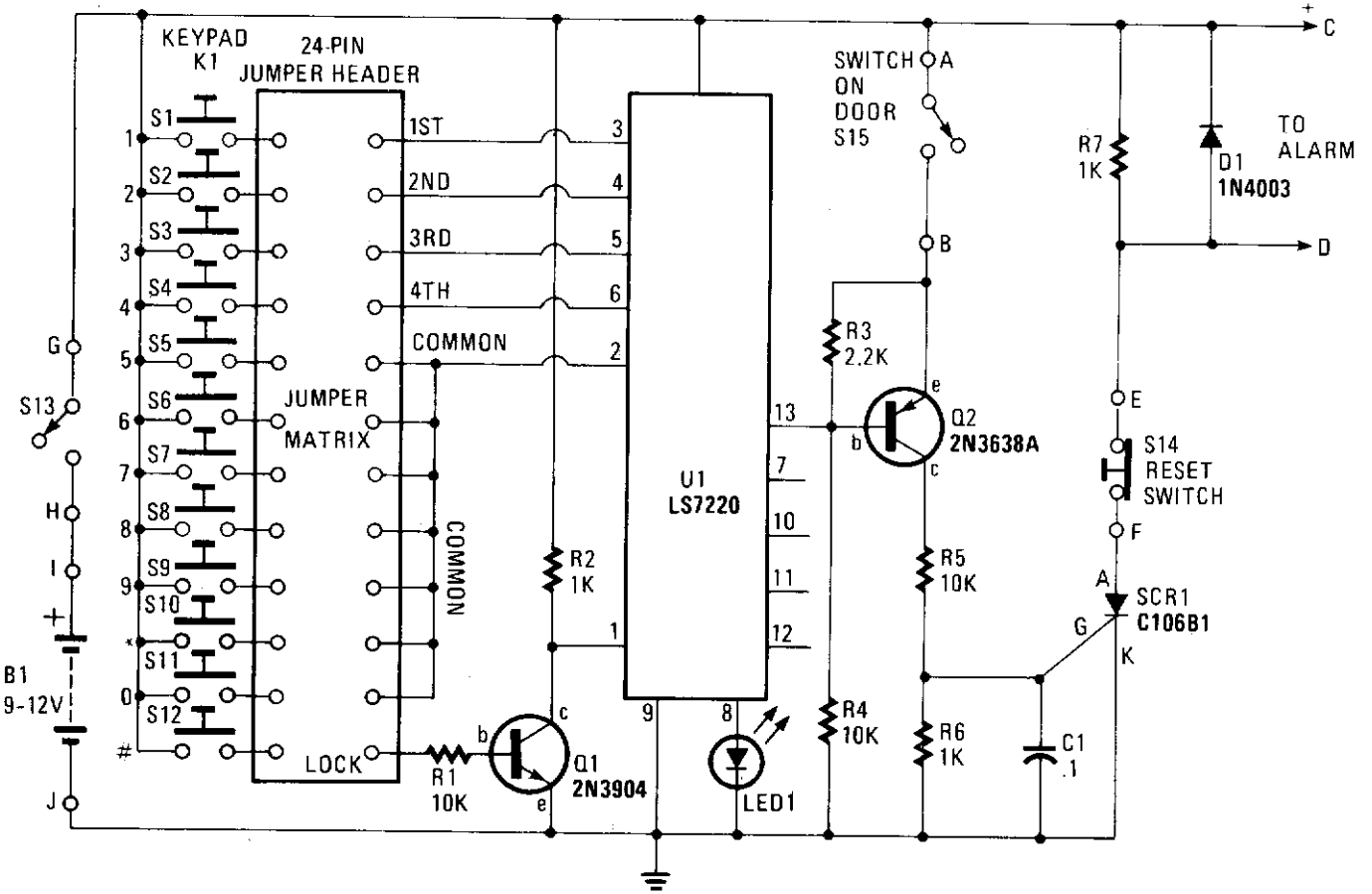

Fig. 28-2

Circuit Notes

When button S12 (#) is pressed, a positive voltage fed through R1 appears at the base of transistor Q1, turning it on. When Q1 is conducting, pin 1 of U1 is brought to ground (low) or the battery's negative terminal. With pin 1 low, two things occur: Pin 8 of U1 goes high (+9 volts dc), turning on LED 1—indicating that the circuit has been armed—and pin 13 goes from high to low. Transistor Q2 requires a low signal or negative voltage on its base in order to conduct. It also needs a positive voltage on its emitter and a negative voltage on the collector. As long as the door switch (S15) remains open (with the door itself closed), Q2's emitter will not receive the necessary positive voltage. If, however, an unauthorized person opens the door, thus closing switch S15 and placing a positive voltage on the emitter of Q1, the following sequence occurs:

1. Transistor Q2 conducts, receiving the necessary biasing current through a current-divider network consisting of resistors R3 and R4.
2. As Q2 conducts, a voltage drop is developed across the voltage dividers made up of resistors R5 and R6. With R5 at 10,000 ohms and R6 at 1000 ohms, approximately one volt appears at the gate of SCR1. That's enough voltage to trigger the SCR's gate.

29
Emulator Circuits

The sources of the following circuits are contained in the Sources section beginning on page 694. The figure number contained in the box of each circuit correlates to the source entry in the Sources section.

Simulated Inductor
Resistor Multiplier
Capacitor Multiplier
JFET ac Coupled Integrator

SIMULATED INDUCTOR

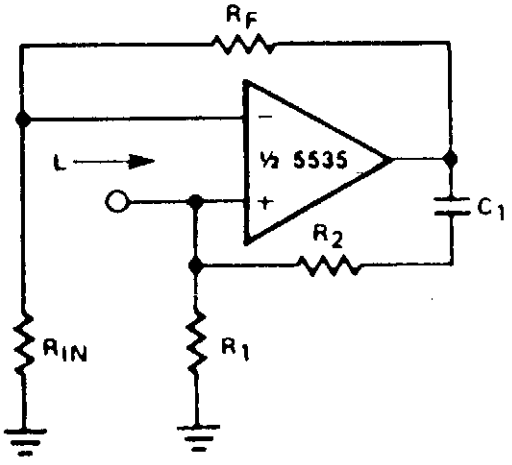

SIGNETICS

Fig. 29-1

Circuit Notes

With a constant current excitation, the voltage dropped across an inductance increases with frequency. Thus, an active device whose output increases with frequency can be characterized as an inductance. The circuit yields such a response with the effective inductance being equal to: $L = R_1R_2C$. The Q of this inductance depends upon R_1 being equal to R_2. At the same time, however, the positive and negative feedback paths of the amplifier are equal leading to the distinct possibility of instability at high frequencies. R_1 should therefore always be slightly smaller than R_2 to assure stable operation.

RESISTOR MULTIPLIER

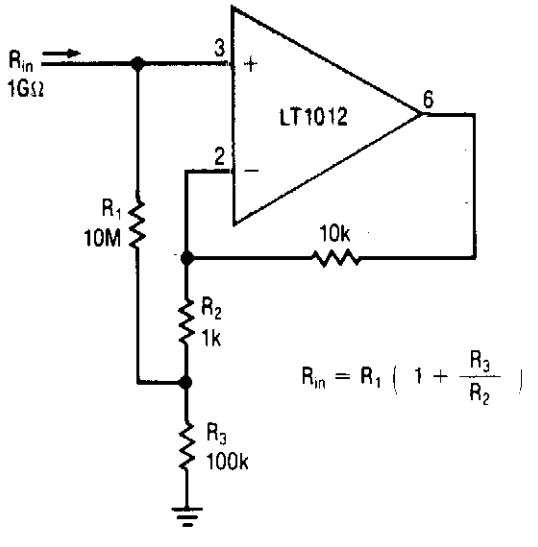

LINEAR TECHNOLOGY CORP.

Fig. 29-2

CAPACITANCE MULTIPLIER

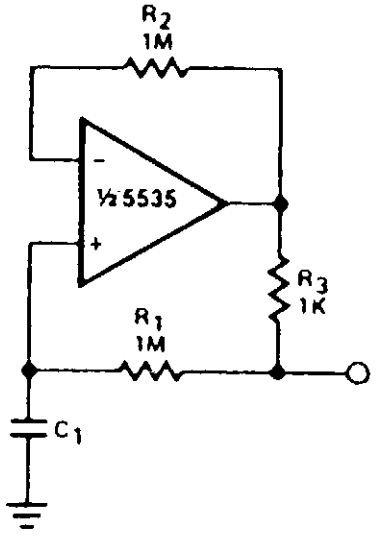

TC10620S

NOTE:
All resistor values are in ohms.

SIGNETICS

Fig. 29-3

Circuit Notes

The circuit can be used to simulate large capacitances using small value components. With the values shown and C - 10 μF, an effective capacitance of 10,000 μF was obtained. The Q available is limited by the effective series resistance. So R1 should be as large as practical.

JFET ac COUPLED INTEGRATOR

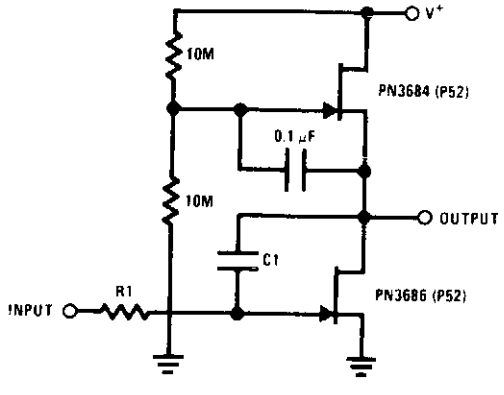

NATIONAL SEMICONDUCTOR CORP.

Fig. 29-4

Circuit Notes

This circuit utilizes the "μ-amp" technique to achieve very high voltage gain. Using C1 in the circuit as a Miller integrator, or capacitance multiplier, allows this simple circuit to handle very long time constants.

30
Fence Chargers

The sources of the following circuits are contained in the Sources section beginning on page 694. The figure number contained in the box of each circuit correlates to the source entry in the Sources section.

Battery-Powered Fence Charger
Solid-State Electric Fence Charger
Electric Fence Charger

BATTERY-POWERED FENCE CHARGER

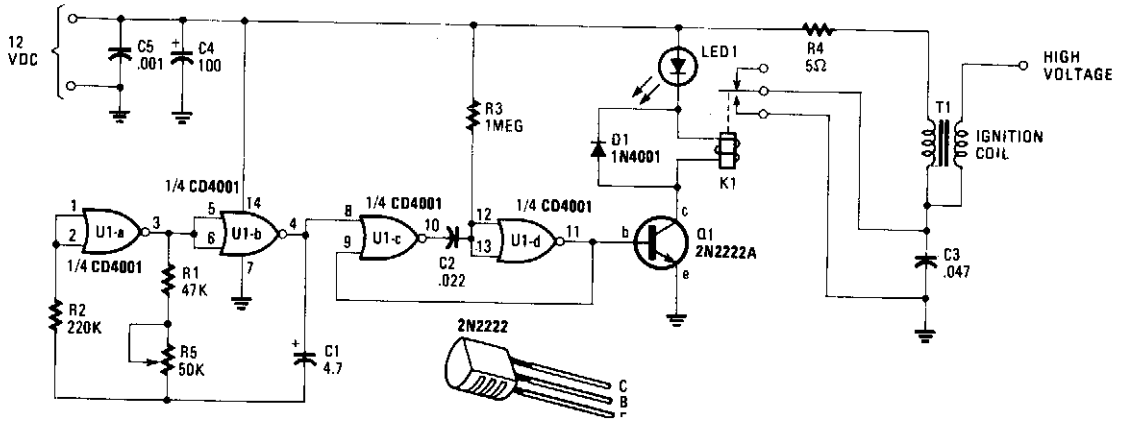

HANDS-ON ELECTRONICS

Fig. 30-1

Circuit Notes

In essence, the circuit is nothing more than an auto ignition coil and a set of points which accomplishes the same thing. A pulsing circuit made from a single CMOS NOR integrated circuit (U1), opens and closes the relay contacts to simulate the action of the original breaker points. The relay pulser is divided into two clocking functions. The first circuit is a free-running squarewave generator that determines the rate or frequency of the pulses that activate the relay. It is essentially a pair of NOR gates connected as inverters and placed in a feedback loop, they are U1-b. The oscillating period of the feedback loop is determined by timing components C1, R1, and variable resistor R5.

ELECTRIC FENCE CHARGER

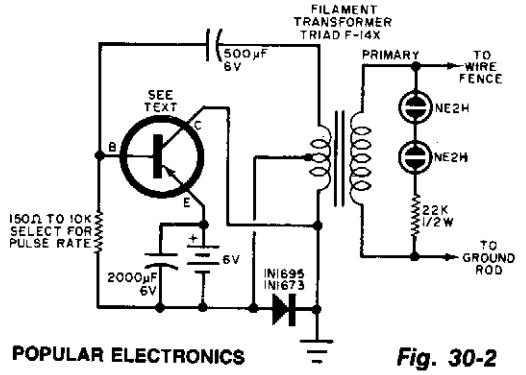

POPULAR ELECTRONICS

Fig. 30-2

Circuit Notes

Any good power transistor can be used in this circuit. The base resistor should be adjusted to obtain a pulse rate of about 50 pulses per minute. The range of values shown can go from 10 pulses to 100 pulses per minute. The single fence wire must be insulated at each supporting pole and should be mounted low enough to prevent an animal from crawling under the wire. The two neon lamps indicate when the unit is operating.

SOLID-STATE ELECTRIC FENCE CHARGER

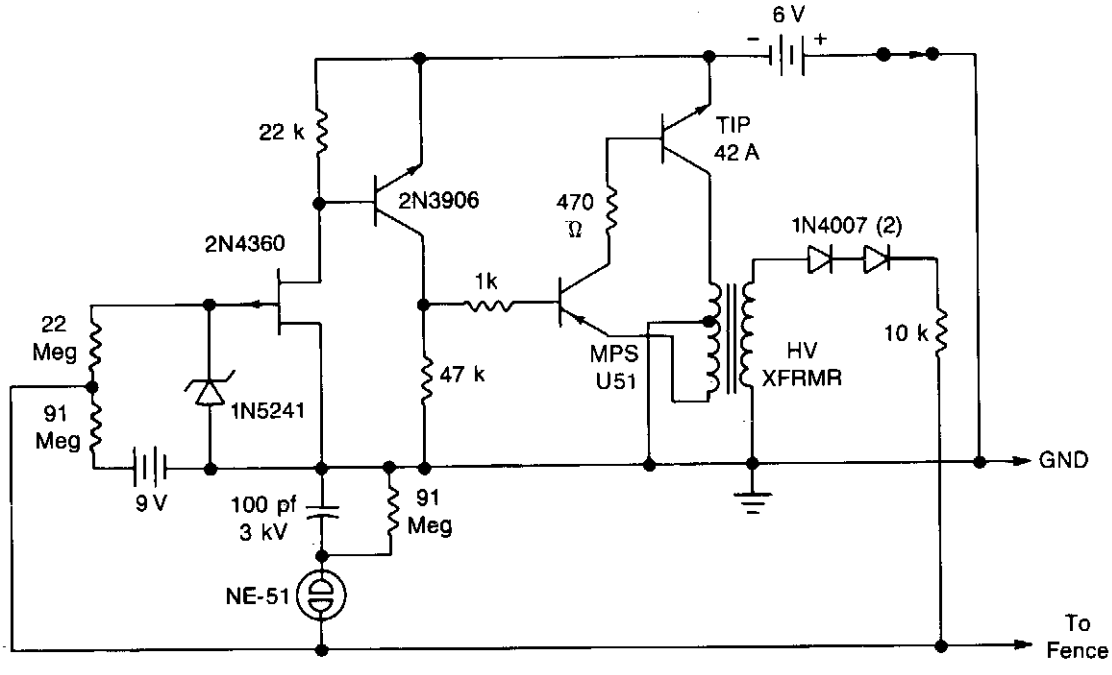

WILLIAM SHEETS

Fig. 30-3

Circuit Notes

A touch-sensing circuit keeps the high-voltage generator cut off until something touches the fence wire. Contact with the fence sensing circuit wire starts the high-voltage generator which applies a series of 500 microsecond pulses at approximately 300 volts to the fence wire. Pulse repetition rate is determined by the intruder's resistance to earth ground. The lower the resistance, the higher the pulse rate. A ground rod is inserted several inches into the ground near the fence wire. In the sensing mode the neon lamp should not flicker or light. If it does, it indicates leakage between the fence wire and ground. If sensitivity is too great, it can be reduced by changing the 91 Meg resistor to 47 or 22 Meg as required.

31
Fiberoptics Circuits

The sources of the following circuits are contained in the Sources section beginning on page 694. The figure number contained in the box of each circuit correlates to the source entry in the Sources section.

Fiberoptic Interface
10 MHz Fiberoptic Receiver
DC Variable Speed Motor Control via Fiberoptics

10 MHz FIBEROPTIC RECEIVER

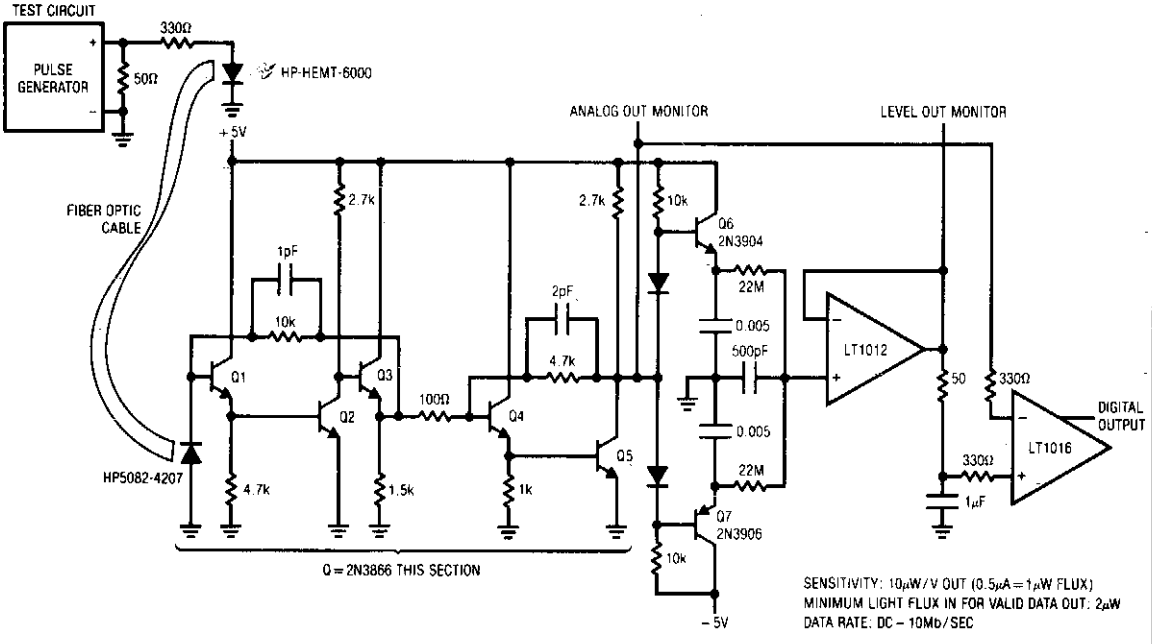

LINEAR TECHNOLOGY CORPORATION

Fig. 31-1

Circuit Notes

The receiver will accurately condition a wide range of light inputs at up to 10 MHz data rates. The optical signal is detected by the PIN photodiode and amplified by a broadband fed-back stage, Q1-Q3. A second, similar, stage gives further amplification. The output of this stage (Q5's collector) biases a 2-way peak detector (Q6-Q7). The maximum peak is stored in Q6's emitter capacitor while the minimum excursion is retained in Q7's emitter capacitor. The dc value of Q5's output signal's mid-point appears at the junction of the 0.005 μF capacitor and the 22 M ohm unit. This point will always sit midway between the signal's excursions, regardless of absolute amplitude. This signal-adaptive voltage is buffered by the low bias LT1012 to set the trigger voltage at the LT1016's positive input. The LT1016's negative input is biased directly from Q5's collector.

DC VARIABLE SPEED MOTOR CONTROL VIA FIBEROPTICS

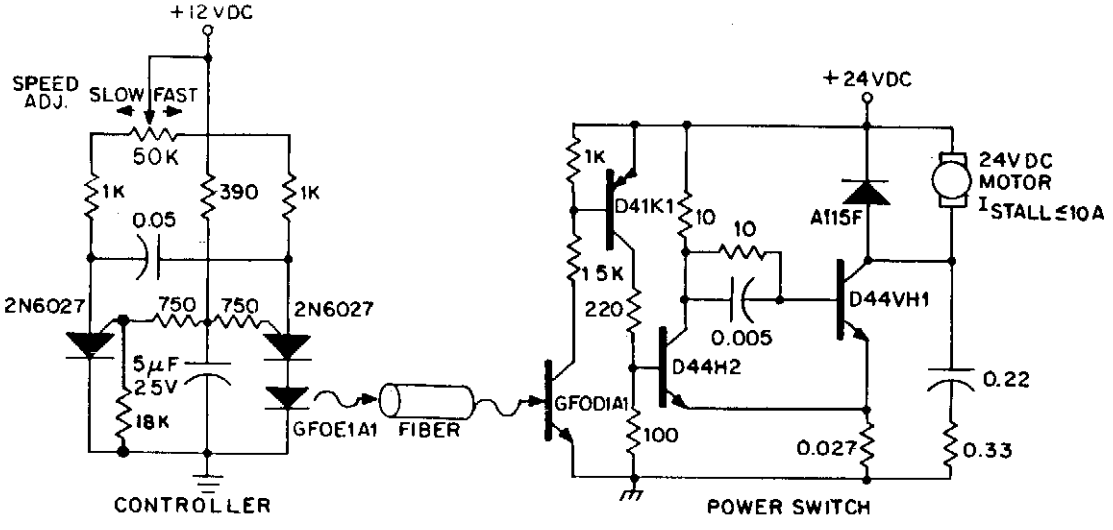

GENERAL ELECTRIC

Fig. 31-2

Circuit Notes

Dc power can also be controlled via fiberoptics. The circuit provides an insulated speed control path for a small dc actuator motor (≤ ½ hp). Control logic is a self-contained module requiring about 300 mW at 12 V, which can be battery powered. The control module furnishes infrared pulses, at a rate of 160 Hz, with a duty cycle determined by the position of the speed adjust potentiometer. The programmable unijunction multivibrator provides approximately 10 mA pulses to the GFOE1A1 at duty cycles adjustable over a range of 1% to 99%. The infrared pulses are detected by the GFOD1A1, amplified by the D39C1 pnp Darlington, and supplied to the power drive switch, which is connected in a Schmitt trigger configuration to supply the motor voltage pulses during the infrared pulses. Thus, the motor's average supply voltage is pulse width modulated to the desired speed, while its current is maintained between pulses by the A115F freewheeling diode. The snubber network connected in parallel with the power switch minimizes peak power dissipation in the output transistor, and enhancing reliability. Larger hp motors can be driven by adding another stage of current gain, while longer fiber range lengths can be obtained with an amplifier transistor driving the GFOE1A1.

FIBEROPTIC INTERFACE

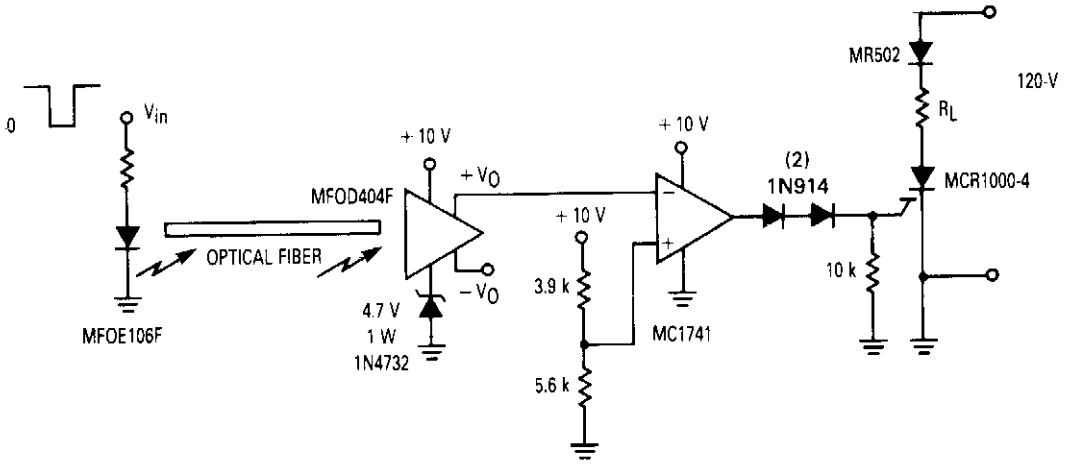

MOTOROLA

Fig. 31-3

Circuit Notes

An op amp is used to interface between a fiberoptic system and the MOS SCR to multi-cycle, half-wave control of a load. This receiver has two complementary outputs, one at a quiescent level of about 0.6 V and the second at 3 V. By adding a 4.7 V zener in series with the return bus, the effective V_{CC} becomes 5.3 V and also the 0.6 V output level is translated up to about 5.3 V. This level is compatible with the reference input (5.9 V) of the single-ended powered op-amp acting as a comparator.

32
Field Strength Meters

The sources of the following circuits are contained in the Sources section beginning on page 694. The figure number contained in the box of each circuit correlates to the source entry in the Sources section.

Field Strength Meter
Field Strength Meter II
RF Sniffer
High Sensitivity Field Strength Meter
Transmission Indicator
LF or HF Field Strength Meter

FIELD-STRENGTH METER

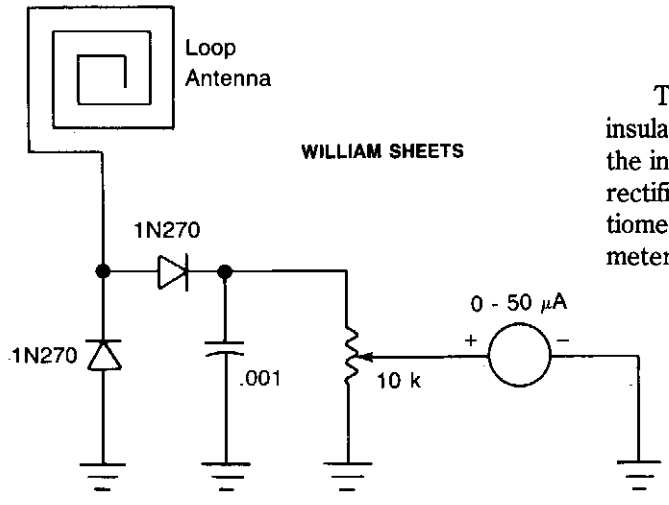

Circuit Notes

The antenna consists of about 20 cm of insulated stranded wire glued or taped around the inside of a small plastic box. RF current is rectified by two diodes, and a 10 k potentiometer provides variable attenuation for the meter.

Fig. 32-1

FIELD-STRENGTH METER II

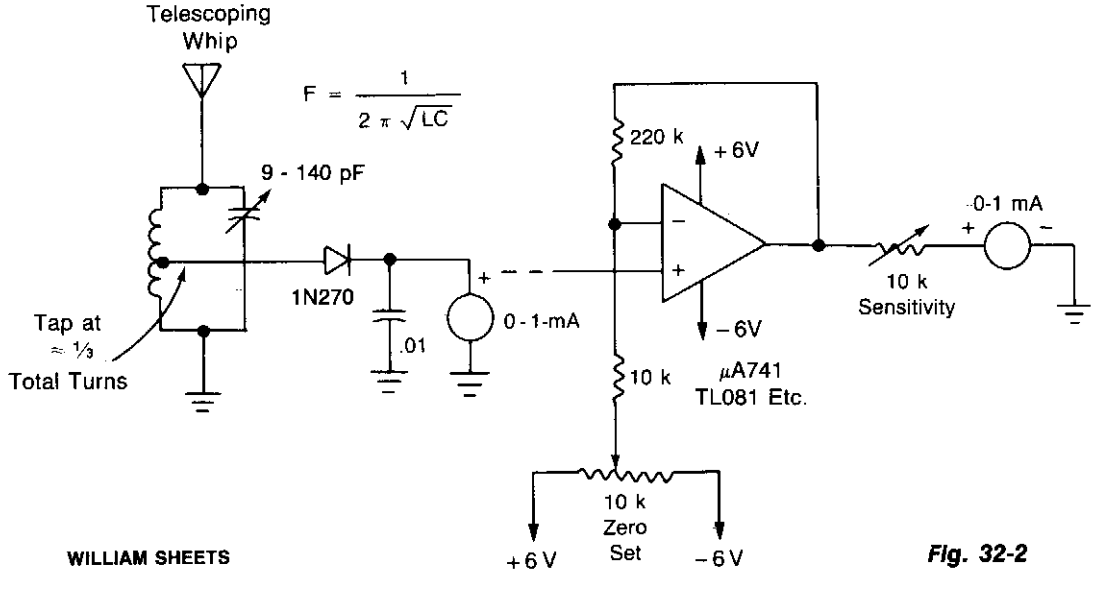

Fig. 32-2

Circuit Notes

"Minimum-parts" field-strength meter is shown here. For more distant testing, add the dc amplifier.

RF SNIFFER

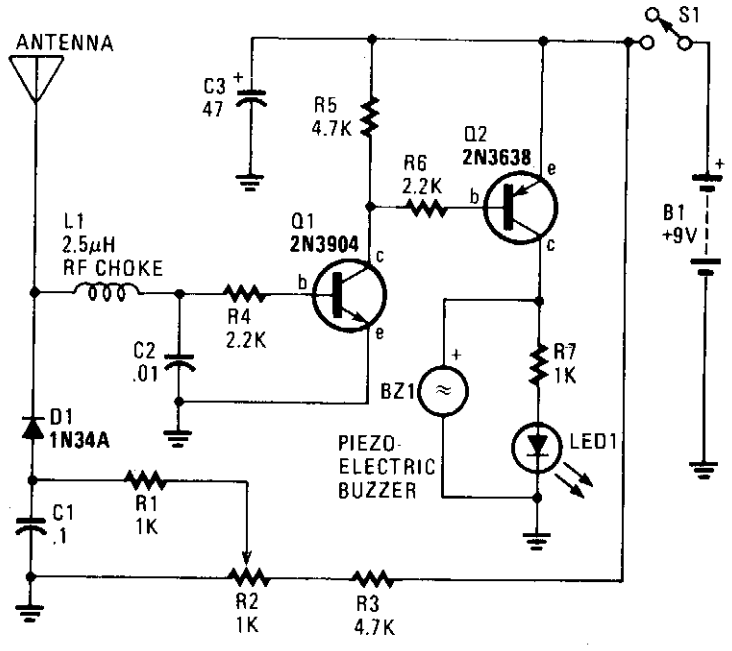

HANDS-ON ELECTRONICS

Fig. 32-3

Circuit Notes

This circuit responds to RF signals from below the standard broadcast band to well over 500 MHz, and provides a visual and audible indication when a signal is received. The circuit is designed to receive low-powered signals as well as strong sources of energy by adjusting the bias on the pick-up diode, D1, with R2. A very sensitive setting can be obtained by carefully adjusting R2 until the LED just begins to light and a faint sound is produced by the Piezo sounder.

HIGH-SENSITIVITY FIELD STRENGTH METER

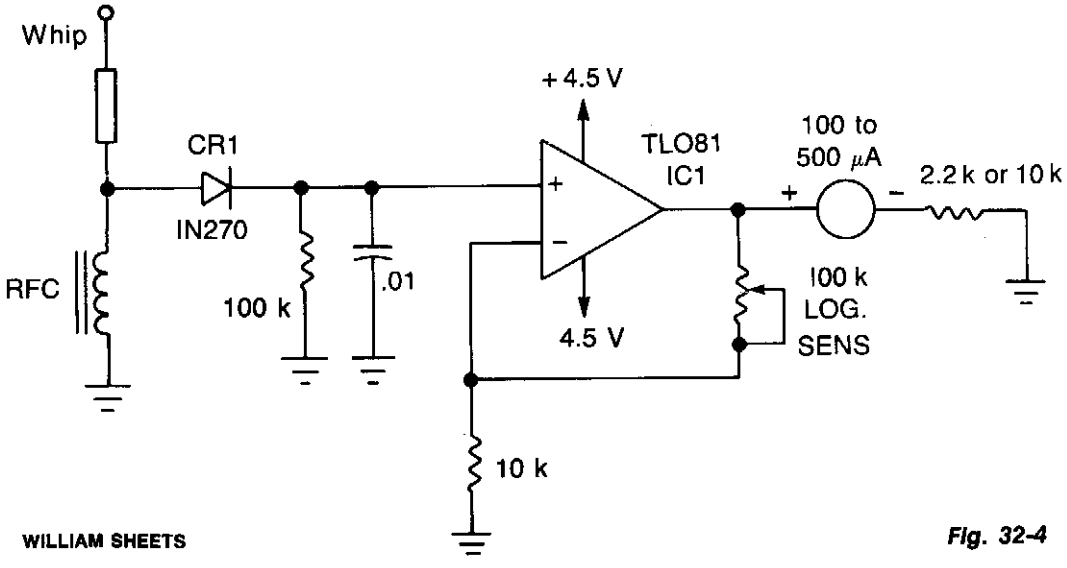

WILLIAM SHEETS

Fig. 32-4

Circuit Notes

A TL081 (IC1 op amp is used to increase sensitivity. RF signal is detected by CR1 and is then amplified by IC1. Full-scale sensitivity is set with the 100 K potentiometer.

TRANSMISSION INDICATOR

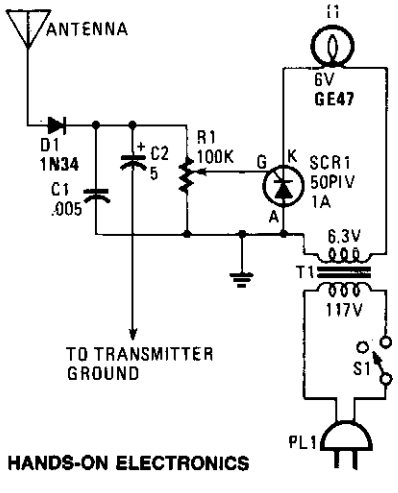

HANDS-ON ELECTRONICS

Fig. 32-5

Circuit Notes

Everytime the push-to-talk button is closed the light will go on. The antenna samples the output RF from the transmitter. That signal is then rectified (detected) by germanium diode D1, and used to charge capacitor C2. The dc output is used to trigger a small silicon-controlled rectifier (SCR1), which permits the current to flow through the small pilot lamp. For lower-power applications, such as CB radio, the antenna will have to be close-coupled to the antenna.

LF OR HF FIELD STRENGTH METER

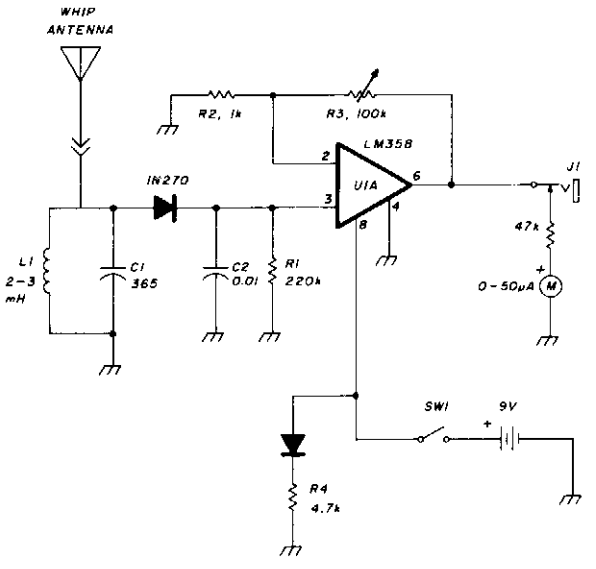

Table 1.

L1	C1 (variable)	Frequency Range	Ham Band
50 μH	30-365 pF	1- 4 MHz	160, 80 meters
3 μH	30-365 pF	5-16 MHz	40, 30, 20 meters
0.9 μH	30-365 pF	9-30 MHz	30, 20, 15, 12, 10 meters
2.5 mH	—	Broadband at reduced gain	

HAM RADIO

Fig. 32-6

Circuit Notes

C1 and L1 resonate on the 1750 meter band, with coverage from 150 kHz to 500 kHz. L1 can be slug-tuned for 160-to-190 kHz coverage alone or a 2.5 mH choke can be used for L1, if desired, using C1 for tuning. A 1N270 germanium diode rectifies the RF signal and C2 is charged at the peak RF level. This dc level is amplified by an LM358. The gain is determined by R2 and R3, 1 100-kilohm linear potentiometer that varies the dc gain from 1 to 100, driving the 50 microampere meter. This field strength meter need not be limited to LF use. The Table shows the L1 and C1 values for HF operation and broadband operation.

33
Filter Circuits

The sources of the following circuits are contained in the Sources section beginning on page 694. The figure number contained in the box of each circuit correlates to the source entry in the Sources section.

Low Cost Universal Active Filter
State Variable Filter
Wideband Two-Pole High-Pass Filter
Active Low-Pass Filter with Digitally Selected Break Frequency
Digitally Tuned Low Power Active Filter
Razor Sharp CW Filter
Fifth Order Chebyshev Multiple Feedback Low-Pass Filter
Precision, Fast Settling Low-Pass Filter
Programmable Bandpass Using Twin-T Bridge
Active Bandpass Filter (f0 = 1000 Hz)
Bandpass Filter
Active Bandpass Filter
Bandpass and Notch Filter
Multiple-Feedback Bandpass Filter

LOW COST UNIVERSAL ACTIVE FILTER

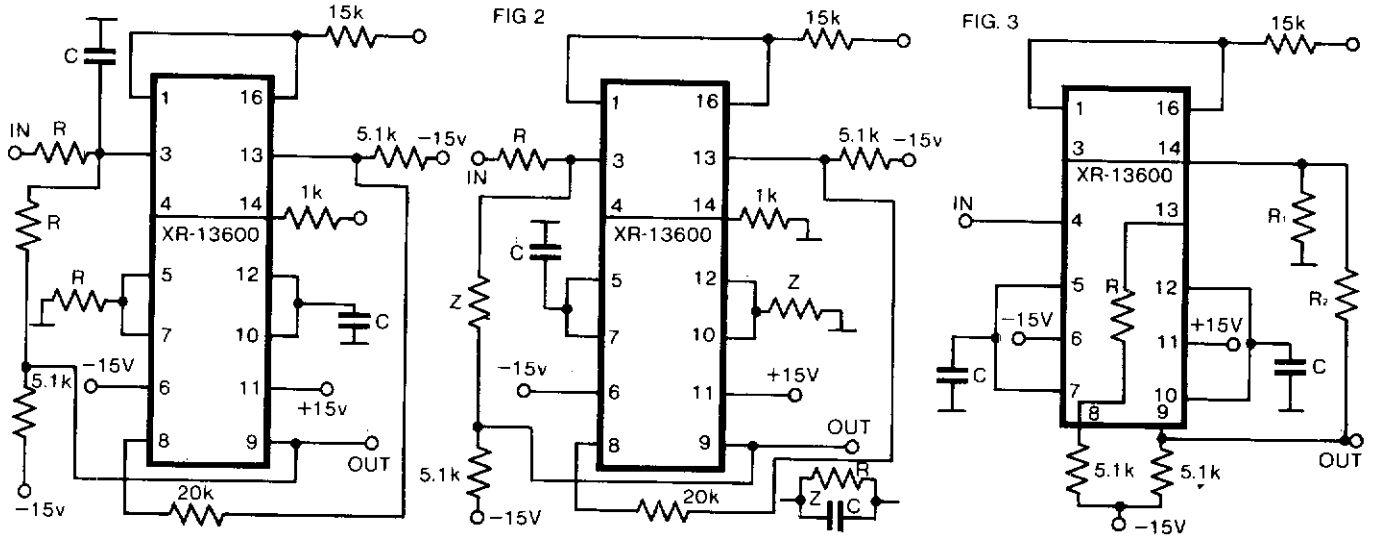

ELECTRONIC ENGINEERING

Fig. 33-1

Circuit Notes

The circuit as shown in Fig. 1 gives the bandpass operation the transfer function calculated from

$$F_{BP}(s) = \frac{S/\omega_o}{K}$$

where $K = 1 + s/Q\omega_o + s^2/\omega_o^2$.
The cut-off frequency, ω_o, and the Q-factor are given by

$$\omega_o = g/C \text{ and } Q = gR/2$$

where g is the transconductance at room temperature.

Interchanging the capacitor C with the resistor R at the input of the circuit high-pass operation is obtained. A low-pass filter is obtained by applying two parallel connections of R and C as shown in Fig. 2.

The low-pass operation may be much improved with the circuit as given in Fig. 3. Here the gain and Q may be set up separately with respect to the cut-off frequency according to the equations

$$Q = 1/fB = 1 + R_2/R_1,$$
$$A = Q^2 \text{ and } \omega_o = g\ fB/C.$$

STATE VARIABLE FILTER

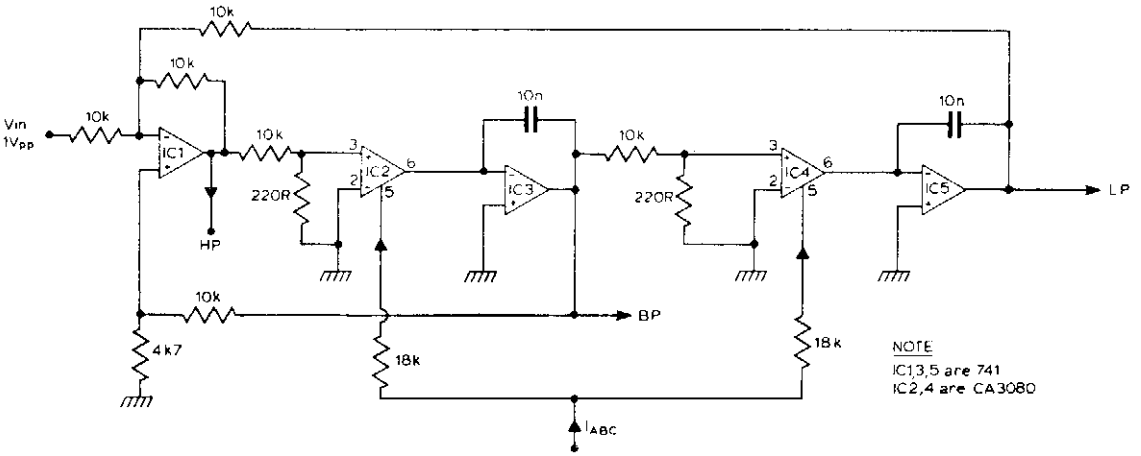

ELECTRONIC TODAY INTERNATIONAL

Fig. 33-2

Circuit Notes

The filter produces three outputs: high-pass, bandpass, and low-pass. Frequency is linearly proportional to the gain of the two integrators. Two CA3080's, (IC2, 4) provide the variable gain, the resonant frequency being proportional to the current I_{ABC}. Using 741 op amps for IC3 a control range of 100 to 1, (resonant frequency) can be obtained. If CA3140's are used instead of 741's then this range can be extended to nearly 10,000 to 1.

WIDEBAND TWO-POLE HIGH-PASS FILTER

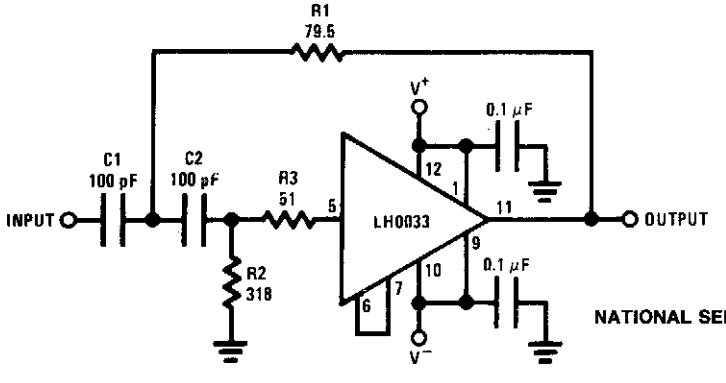

Fig. 33-3

NATIONAL SEMICONDUCTOR CORP.

Circuit Notes

The circuit provides a 10MHz cutoff frequency. Resistor R3 ensures that the input capacitance of the amplifier does not interact with the filter response at the frequency of interest. An equivalent low pass filter is similarly obtained by capacitance and resistance transformation.

ACTIVE LOW-PASS FILTER WITH DIGITALLY SELECTED BREAK FREQUENCY

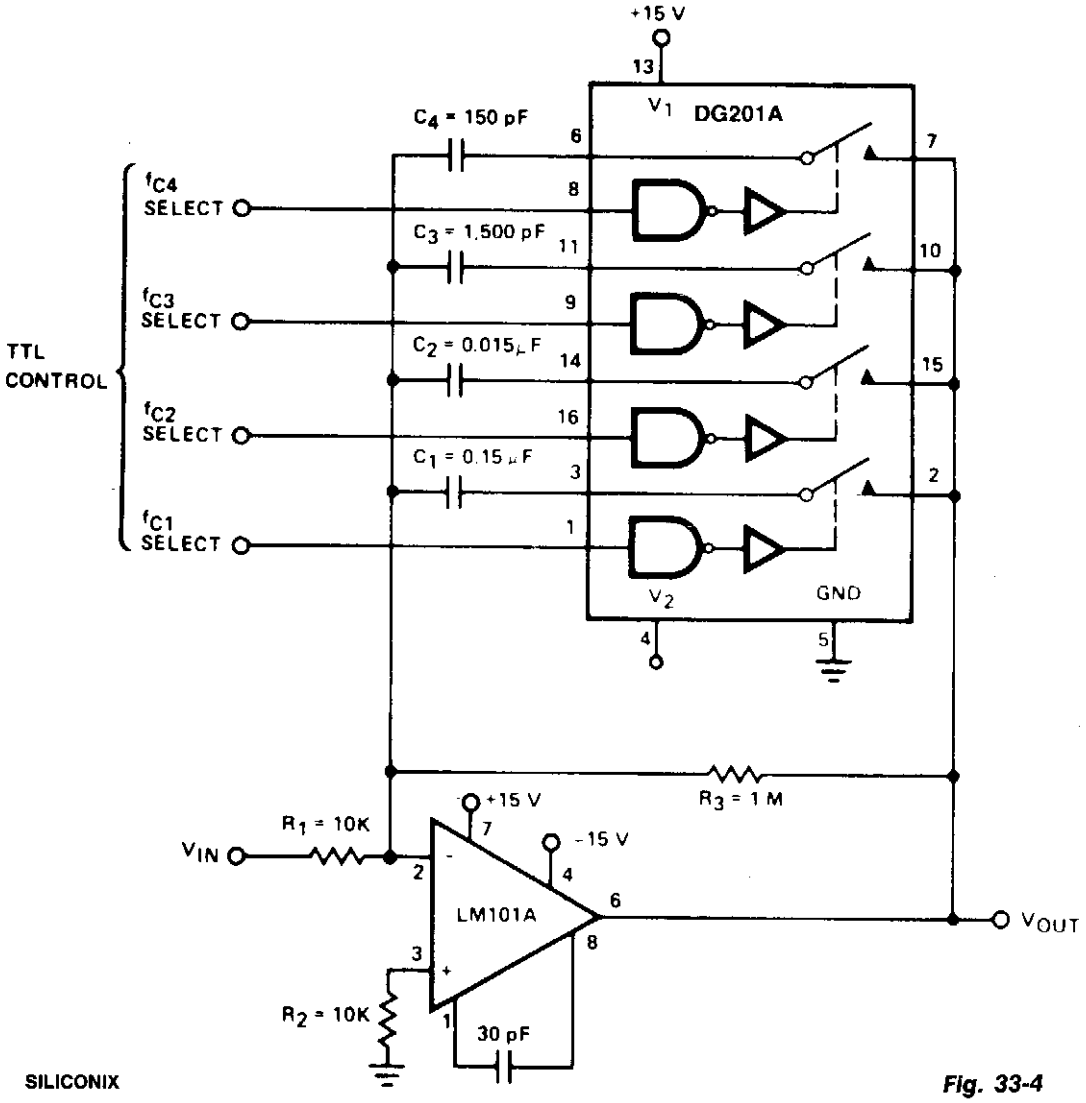

SILICONIX

Fig. 33-4

Circuit Notes

Variable low-pass filter has break frequencies at 1, 10, 100 Hz and 1 kHz. The break frequency is

$$1.\quad fc = \frac{1}{2\,\pi\,R_3\,C_X}$$

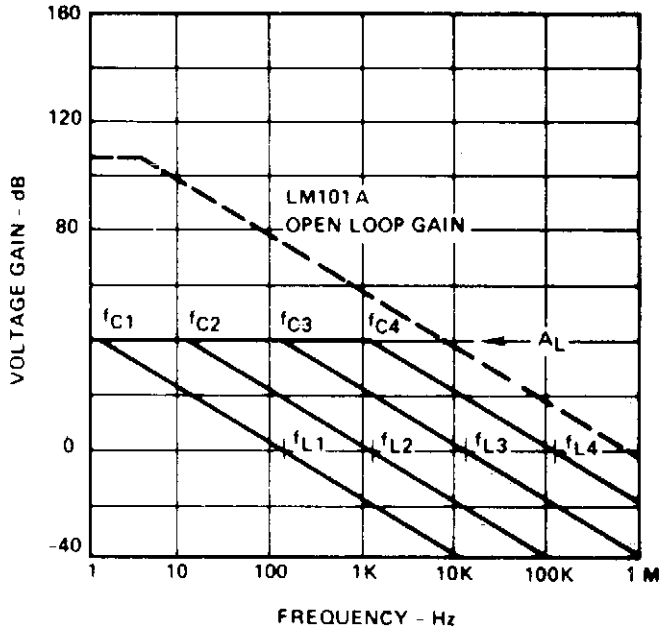

A_L (VOLTAGE GAIN BELOW BREAK FREQUENCY)
$= \frac{R_3}{R_1} = 100\ (40\ dB)$

f_c (BREAK FREQUENCY) $= \frac{1}{2\pi R_3 C_X}$

f_L (UNITY GAIN FREQUENCY) $= \frac{1}{2\pi R_1 C_X}$

MAX ATTENUATION $= \frac{r_{DS(on)}}{10K} = -40\ dB$

The low frequency gain is

$$2. \quad A_L = \frac{R_3}{R_3} = 100\ (40\ dB)$$

A second break frequency (a zero) is introduced by $r_{DS(on)}$ of the DG201A, causing the minimum gain to be

$$3. \quad A_{MIN} = \frac{r_{DS(on)}}{R_1} \approx \frac{100}{10K} = .01,$$

a maximum attenuation of 40 dB (80 dB relative to the low frequency gain).

DIGITALLY TUNED LOW POWER ACTIVE FILTER

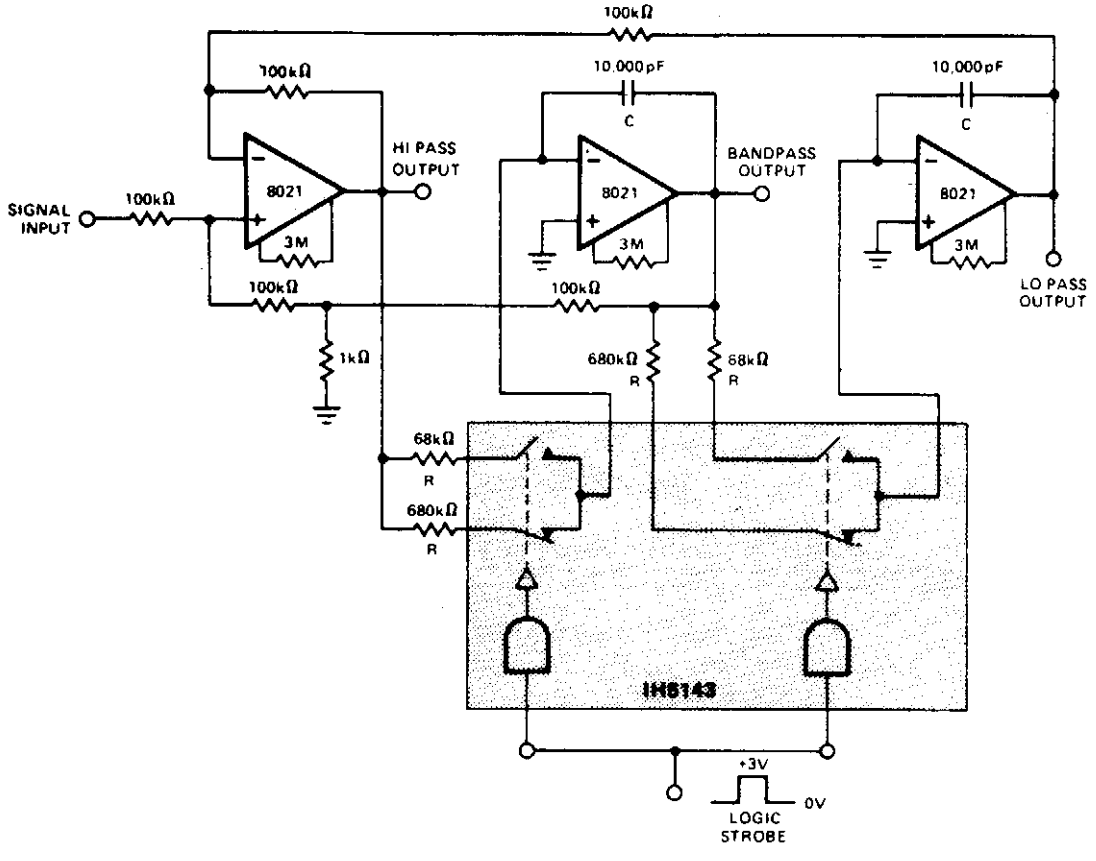

INTERSIL

Fig. 33-5

Circuit Notes

This constant gain, constant Q, variable frequency filter provides simultaneous low-pass, bandpass, and high-pass outputs with the component values shown, the center frequency will be 235 Hz and 23.5 Hz for high and low logic inputs respectively, Q = 100, and gain = 100.

RAZOR-SHARP CW FILTER

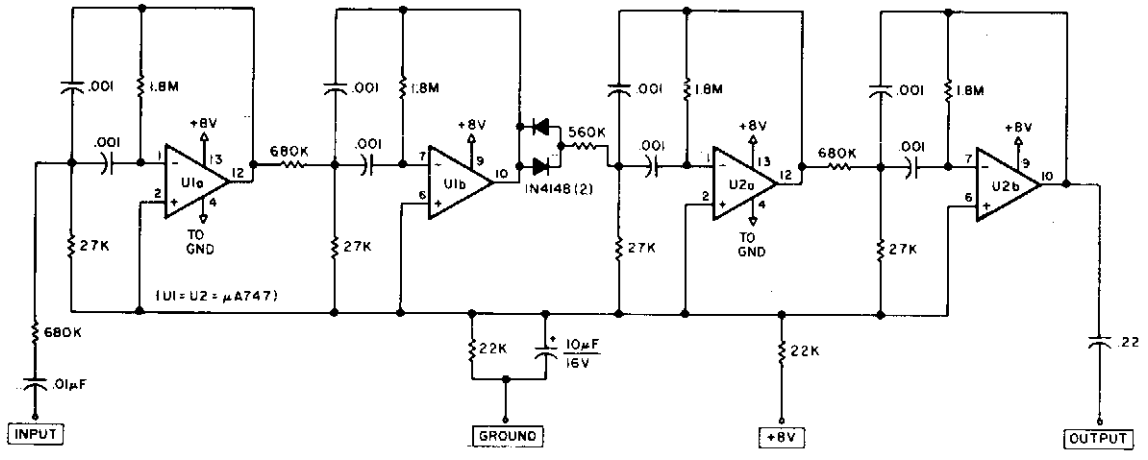

73 MAGAZINE

Fig. 33-6

Circuit Notes

The circuit consists of four stages of active bandpass filtering provided by two type-μA747 integrated-circuit dual op amps and includes a simple threshold detector (diodes D1 and D2) between stages 2 and 3 to reduce low-level background noise. Each of the four filter stages acts as a narrow bandpass filter with an audio bandpass centered at 750 Hz. The actual measured 3-dB bandwidth is only 80 Hz wide.

FIFTH ORDER CHEBYSHEV MULTIPLE FEEDBACK LOW PASS FILTER

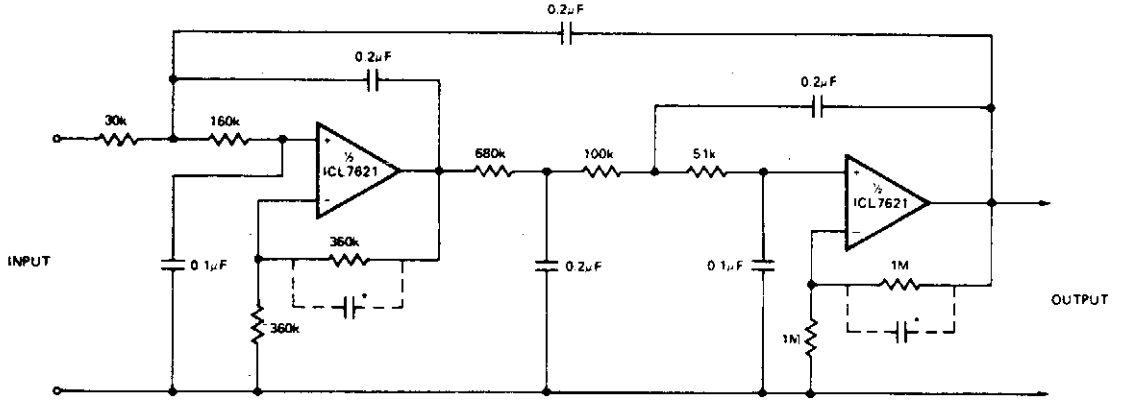

INTERSIL

Fig. 33-7

Circuit Notes

The low bias currents permit high resistance and low capacitance values to be used to achieve low frequency cutoff. f_c = 10 Hz, A_{VCL} = 4, Passband ripple = 0.1 dB. Note that small capacitors (25-50 pF) may be needed for stability in some cases.

PRECISION, FAST SETTLING, LOW-PASS FILTER

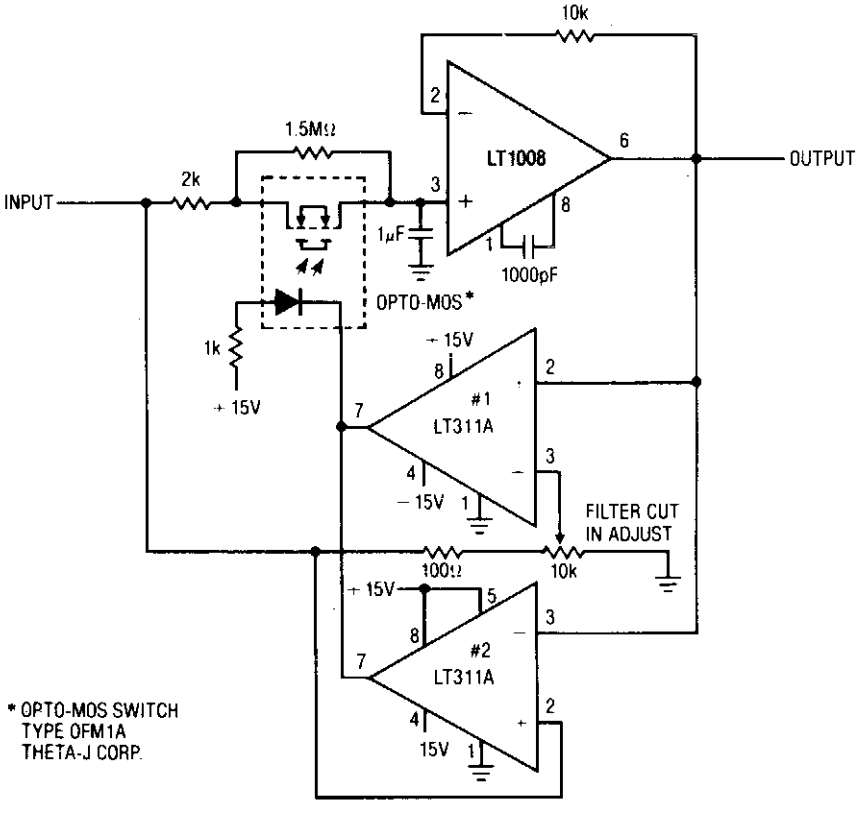

LINEAR TECHNOLOGY

Fig. 33-8

Circuit Notes

This circuit is useful where fast signal acquisition and high precision are required, as in electronic scales. The filter's time constant is set by the 2 K ohm resistor and the 1 μF capacitor until comparator No. 1 switches. The time constant is then set by the 1.5 M ohm resistor and the 1 μF capacitor. Comparator No. 2 provides a quick reset. The circuit settles to a final value three times as fast as a simple 1.5 M ohm—1 μF filter, with almost no dc error.

PROGRAMMABLE BANDPASS USING TWIN-T BRIDGE

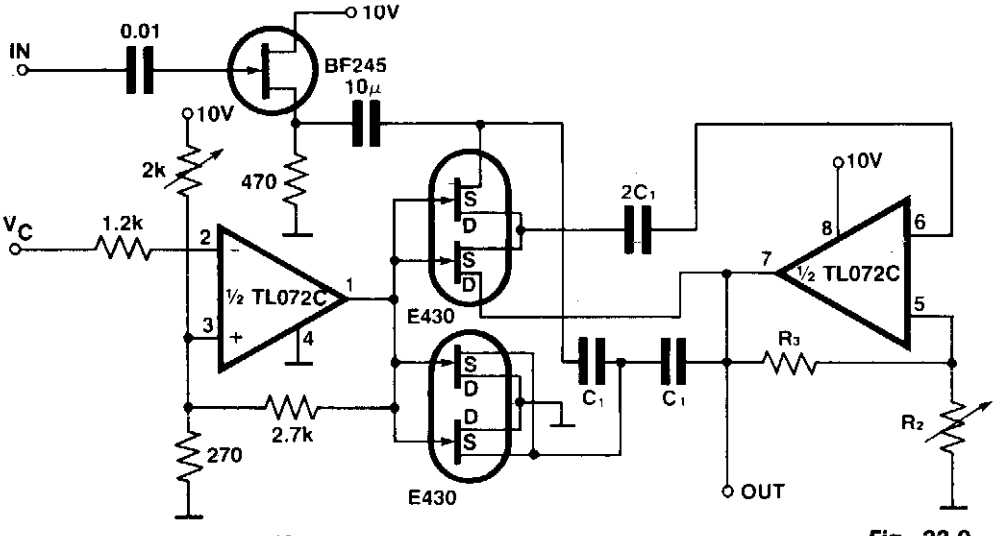

ELECTRONIC ENGINEERING

Fig. 33-9

Circuit Notes

The circuit gives a programmable bandpass where both the cut-over frequency and the gain, A, are controlled independently. In the twin-T bridge the resistors R and R/2 are replaced by two double FETs, E 430, the channel resistance of the first one in the series, the channel resistances of the second one are in parallel as to stimulate the resistance R/2. Both these resistors are controlled by V_c which ranges from 0 V to about 1 V. The gain of the circuit is set by means of the resistors R2 and R3.

ACTIVE BANDPASS FILTER (f0 = 1000 Hz)

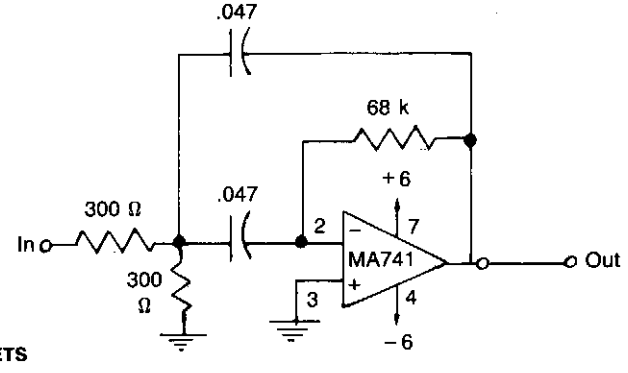

WILLIAM SHEETS

Fig. 33-10

Circuit Notes

This filter has a bandpass centered around 1kHz, for applications such as bridge amplifiers, null detectors, etc.

The circuit uses a μA741 IC and standard 5% tolerance components.

BANDPASS FILTER

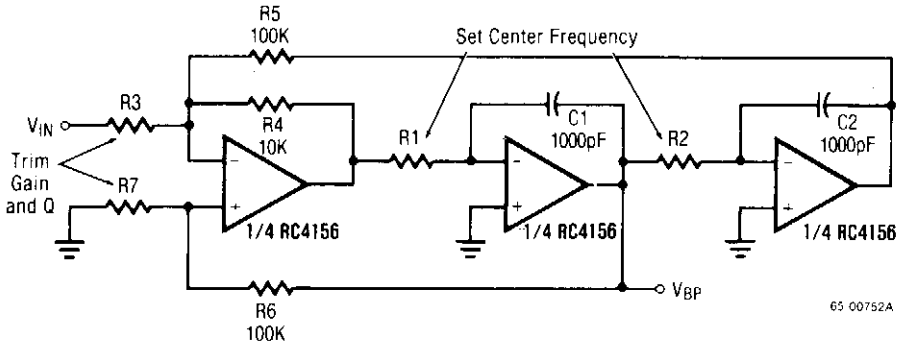

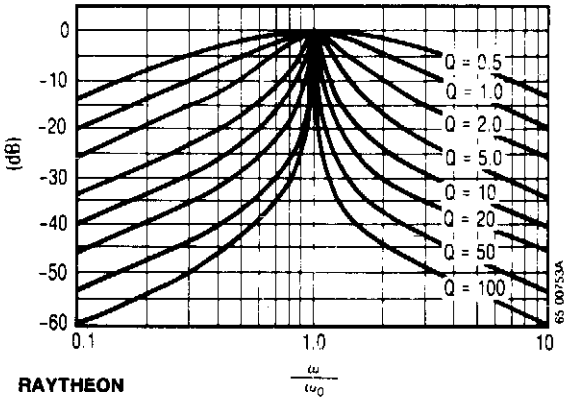

$$\frac{V_{BP}}{V_{IN}} = \frac{\frac{\omega}{\omega_0}\ \frac{1}{Q}}{\sqrt{\left[1-\left(\frac{\omega}{\omega_0}\right)^2\right]^2+\left(\frac{1}{Q}\ \frac{\omega}{\omega_0}\right)^2}}$$

RAYTHEON

Fig. 33-11

Circuit Notes

The input signal is applied through R3 to the inverting input of the summing amplifier and the output is taken from the first integrator. The summing amplifier will maintain equal voltage at the inverting and non-inverting inputs. Defining 1/R1C1 as ω_1 and 1/R2C2 as ω_2, this is now a convenient form to look at the center-frequency ω_0 and filter Q.

$$\omega_0 = \sqrt{0.1\ \omega_1\ \omega_2}$$

$$= 10^{-9}\sqrt{0.1R1R2}$$

$$\text{and } Q = \left[\frac{1+\frac{10^5}{R7}}{1.1+\frac{10^4}{R3}}\right]\omega_0$$

The frequency response for various values of Q is shown.

ACTIVE BANDPASS FILTER

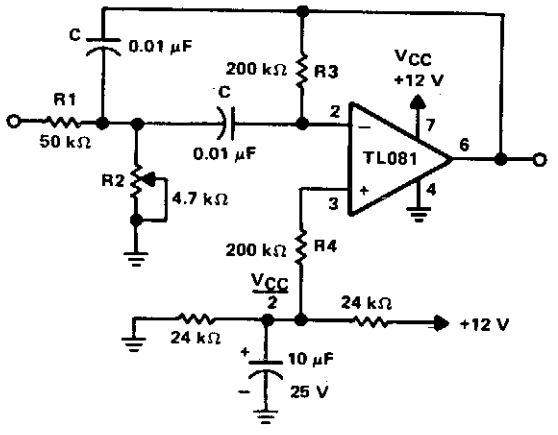

TEXAS INSTRUMENTS

Fig. 33-12

Circuit Notes

The circuit is a two-pole active filter using a TL081 op amp. This type of circuit is usable only for Qs less than 10. The component values for this filter are calculated from the following equations.

$$R1 = \frac{Q}{2\ fGC} \qquad R3 = \frac{2Q}{2fC}$$

$$R2 = \frac{Q}{(2Q^2 - G)2fC} \qquad R4 = R3$$

The values shown are for a center frequency of 800 Hz.

BANDPASS AND NOTCH FILTER

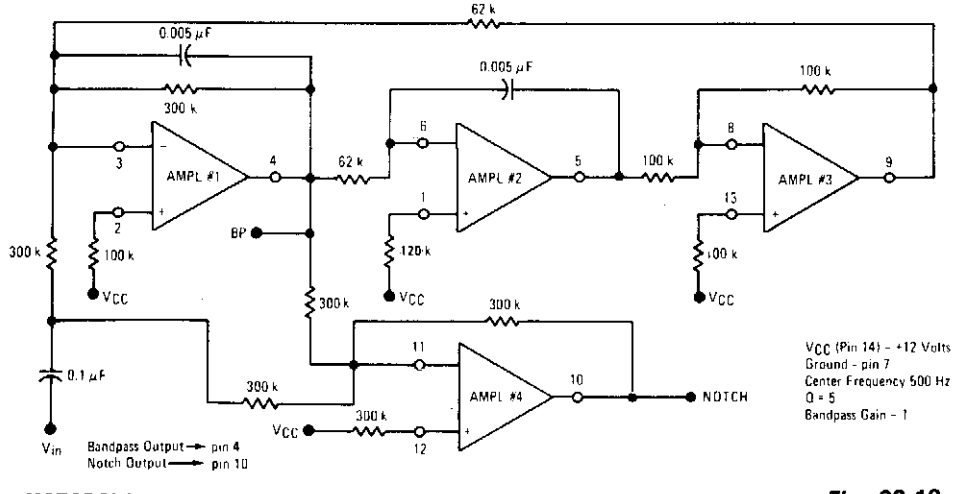

MOTOROLA

Fig. 33-13

Circuit Notes

The Quad op amp MC4301 is used to configure a filter that will notch out a given frequency and produce that notched-out frequency at the BP terminal, useful in communications or measurement setups. By proper component selection any frequency filter up to a few tens of kilohertz can be obtained.

MULTIPLE-FEEDBACK BANDPASS FILTER

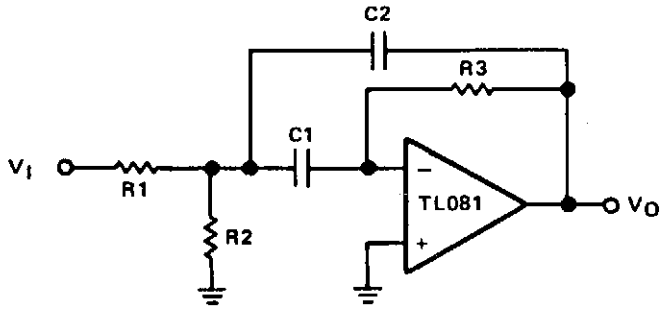

Fig. 33-14

TEXAS INSTRUMENTS

Circuit Notes

The op amp is connected in the inverting mode. Resistor R3 from the output to the inverting input sets the gain and current through the frequency-determining capacitor, C1. Capacitor C2 provides feedback from the output to the junction of R1 and R2. C1 and C2 are always equal in value. Resistor R2 may be made adjustable in order to adjust the center frequency which is determined from:

$$fo = \frac{1}{2\pi C} \quad \frac{1}{R3} \times \frac{R1 + R2}{R1R2}$$

When designing a filter of this type it is best to select a value for C1 and C2, keeping them equal. Typical audio filters have capacitor values from 0.01 μF to 0.1 μF which will result in reasonable values for the resistors.

34

Flashers and Blinkers

The sources of the following circuits are contained in the Sources section beginning on page 694. The figure number contained in the box of each circuit correlates to the source entry in the Sources section.

Low Voltage Lamp Flasher
Miniature Transistorized Light Flasher
Alternating Flasher
Electronic Light Flasher
High-Power Battery-Operated Flasher
Series SCR Lamp Flasher Handles a Wide Range of Loads
SCR Relaxation Flasher
Low Current Consumption Lamp Flasher
LED Flasher Uses PUT
2 kW Flasher with Photoelectric Control
Sequential Flasher
1 kW Flip-Flop Flasher Circuit
Low Frequency Oscillator Flasher
High Drive Oscillator/Flasher
Transistorized Flashers
Sequential ac Flasher
Astable Flip-Flop with Starter
LED Flasher Uses UJT

LOW VOLTAGE LAMP FLASHER

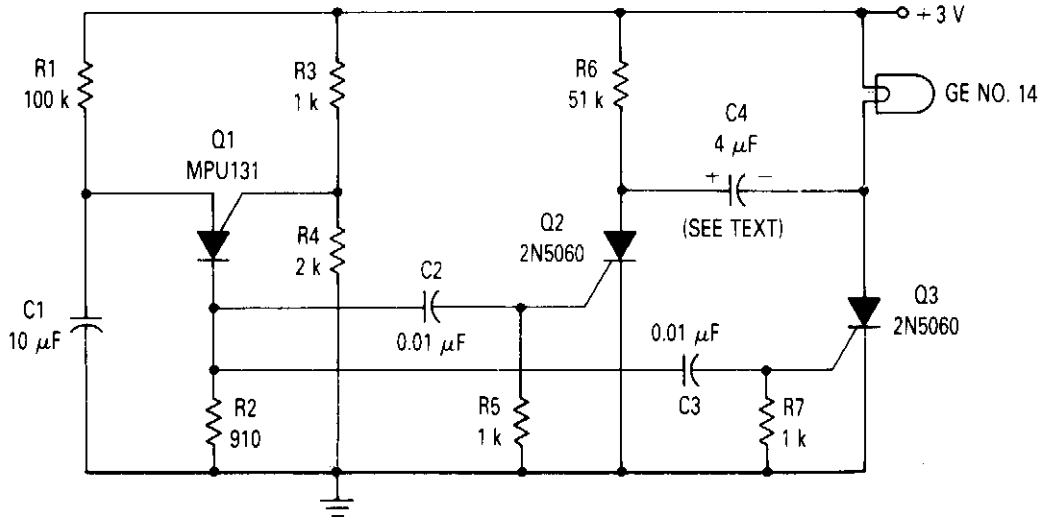

MOTOROLA

Fig. 34-1

Circuit Notes

The circuit is composed of a relaxation oscillator formed by Q1 and an SCR flip-flop formed by Q2 and Q3. With the supply voltage applied to the circuit, the timing capacitor C1 charges to the firing point of the PUT, 2 volts plus a diode drop. The output of the PUT is coupled through two 0.02 μF capacitors to the gate of Q2 and Q3. To clarify operation, assume that Q3 is on and capacitor C4 is charged plus to minus as shown in the figure. The next pulse from the PUT oscillator turns Q2 on. This places the voltage on C4 across Q3 which momentarily reverse biases Q3. This reverse voltage turns Q3 off. After discharging, C4 then charges with its polarity reversed to that shown. The next pulse from Q1 turns Q3 on and Q2 off. Note that C4 is a non-polarized capacitor. For the component values shown, the lamp is on for about ½ second and off the same amount of time.

MINIATURE TRANSISTORIZED LIGHT FLASHER

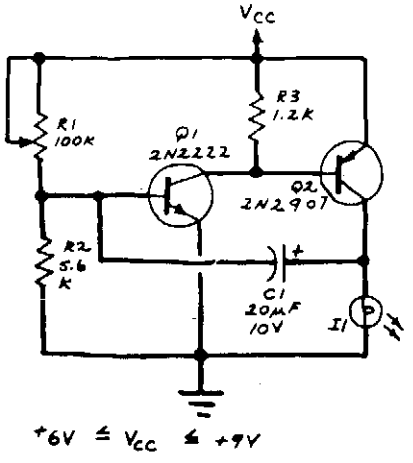

Circuit Notes

R1 adjusts the flash rate. The lamp should be a No. 122, No. 222 or other similar, miniature incandescent lamp.

POPULAR ELECTRONICS

Fig. 34-2

ALTERNATING FLASHER

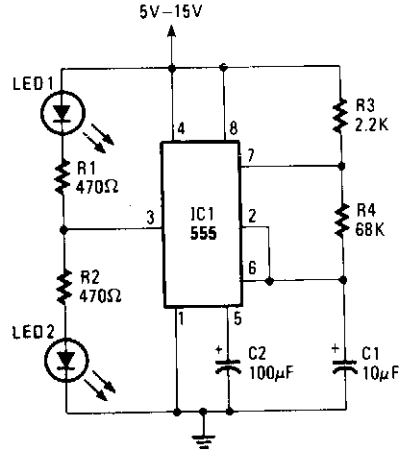

Circuit Notes

The LED's flash alternately. The flash rate is determined by C1 and R4.

HANDS-ON ELECTRONICS

Fig. 34-3

ELECTRONIC LIGHT FLASHER

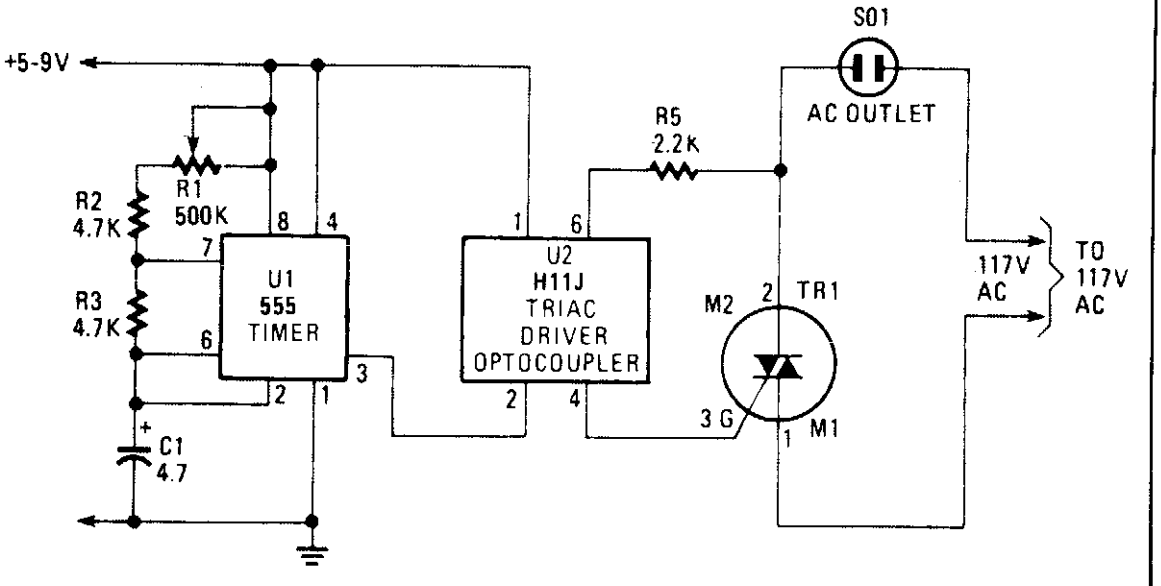

HANDS-ON ELECTRONICS

Fig. 34-4

Circuit Notes

The blinking or flashing rate is determined by U1, a 555 timer integrated circuit. Its output, at pin 3, feeds U2, a HIIJ triac driver. That driver consists of an infrared LED that is coupled internally to a light-activated silicon bilateral switch (DIAC). When the LED internal to U2 is turned on by the timer, U1, its light triggers the DIAC; effectively closing the circuit between pins 4 and 6, and fires the Triac, TR1 through its gate circuit. When the Triac is firing, it acts as a closed circuit that turns on the light (or other device it may be controlling via S01). When the timer turns off, the LED, the DIAC and Triac stop conducting and the light turns off. The sequence then repeats. The flashing rate can be varied by means of R1, a 500,000 ohm potentiometer.

HIGH-POWER BATTERY-OPERATED FLASHER

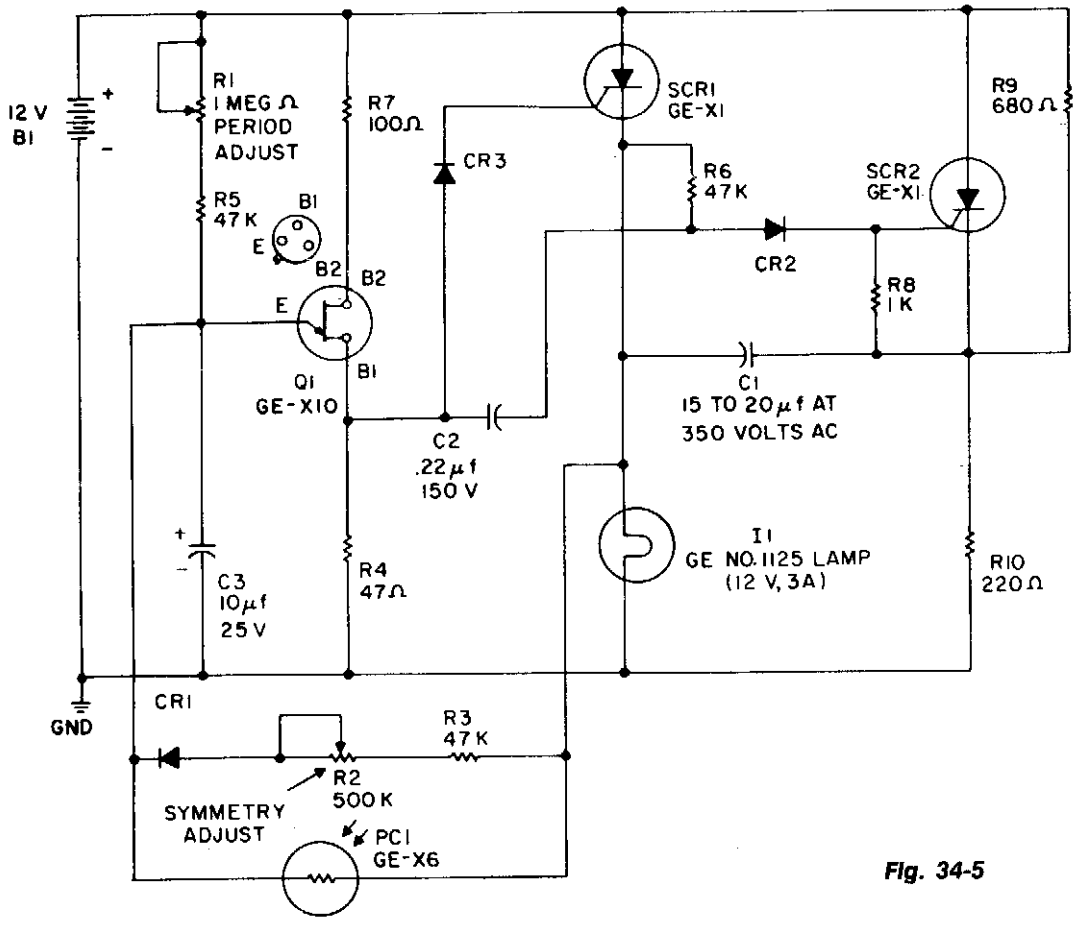

Fig. 34-5

GENERAL ELECTRIC

Circuit Notes

This flasher operates from a 12-volt car or boat battery. It offers 36 to 40-watts output, variable flash rate (up to 60 flashes per minute), independent control of both on and off cycles and photoelectric night and day control that turns the flasher on at night and shuts it off during the day for automatic operation. SCR1 and SCR2 form a basic dc flip-flop. The lamp load is the cathode leg of one SCR so that the other side of the load may be at ground (negative) potential (required in some applications). The flip-flop timing is controlled by a conventional UJT oscillator arrangement (Q1, R1, C3, etc.). Potentiometer R2 and diode CR1 provide on/off timing independence. Photoconductor PC1 locks out the UJT firing circuit during the daylight hours.

SERIES SCR LAMP FLASHER HANDLES A WIDE RANGE OF LOADS

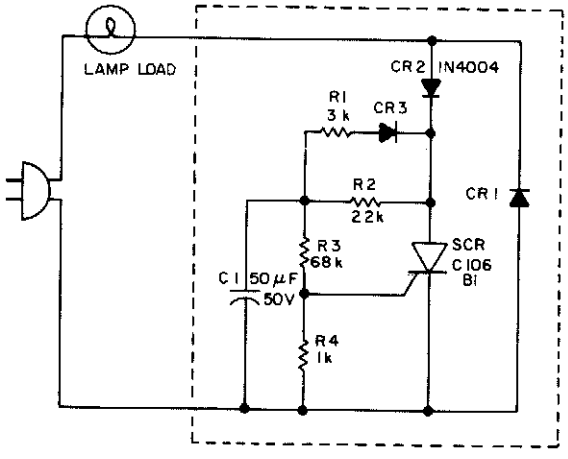

Fig. 34-6

ELECTRONIC DESIGN

Circuit Notes

Brief full-power flashes are obtained when the SCR conducts during positive half cycles of the line voltage. The SCR fires when the voltage at the divider, R3 and R4, reaches the gate-firing level. Diode D1 conducts during the reverse cycle of the SCR and provides preheating current to the lamp filaments.

SCR RELAXATION FLASHER

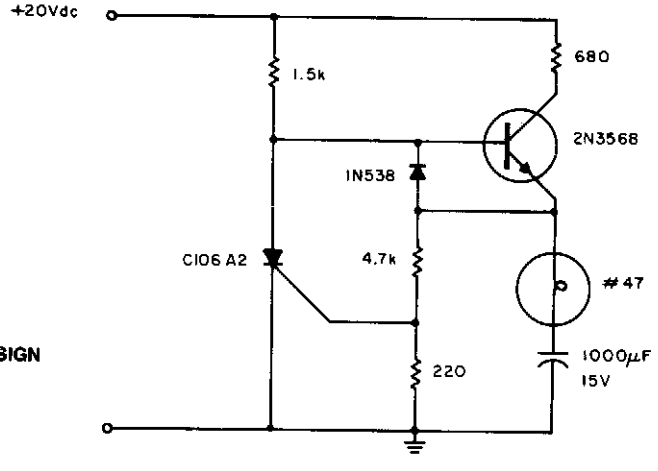

Fig. 34-7

ELECTRONIC DESIGN

Circuit Notes

Flashing occurs each time the capacitor discharges through the turned-on SCR. When the discharge current falls below the SCR holding current, the SCR turns off, and the capacitor begins charging for another cycle. The circuit will maintain a slower but good flashing capability even after considerable battery degradation.

LOW CURRENT CONSUMPTION LAMP FLASHER

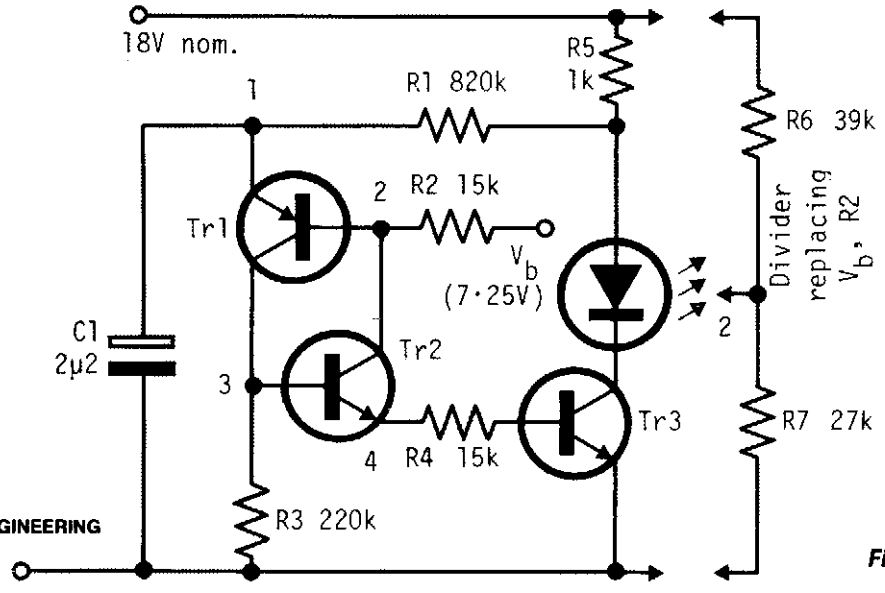

Fig. 34-8

Circuit Notes

The circuit is economical in components, and will work with virtually any transistors and is reliably self-starting. The voltage Vb can be taken from a divider, as shown at the right. If taken from a fixed source, flashing becomes slower as battery voltage falls. The lowest drive current into the base of Tr3 is about (Vb—0,6 V)/(R2 + R4). Resistor R4 limits the initial current from C1 and, as shown, R2 and R4 can be roughly equal when a divider is used for Vb. Resistor R2 equals R6R7/(R6 + R7). With the voltages shown, and with R2 = R4, the on-time is about 1.1 C1R2 and the off-time about 0.28 C1R1. Using the component values shown the period is about 0.55 sec. with a duty cycle of about 7% and a mean battery current including the Vb divider, about 1.5 mA.

LED FLASHER USES UJT

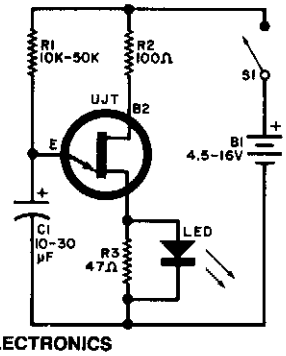

Fig. 34-9

Circuit Notes

A relaxation oscillator is used to flash an LED in the base circuit. C1 is charged slowly through R1 by the power source, then discharged periodically through R3 and the LED by the UJT. Flashing rate is determined by the supply voltage and by R1-C1's time constant. UJT = 2N4871

2 kW FLASHER WITH PHOTOELECTRIC CONTROL

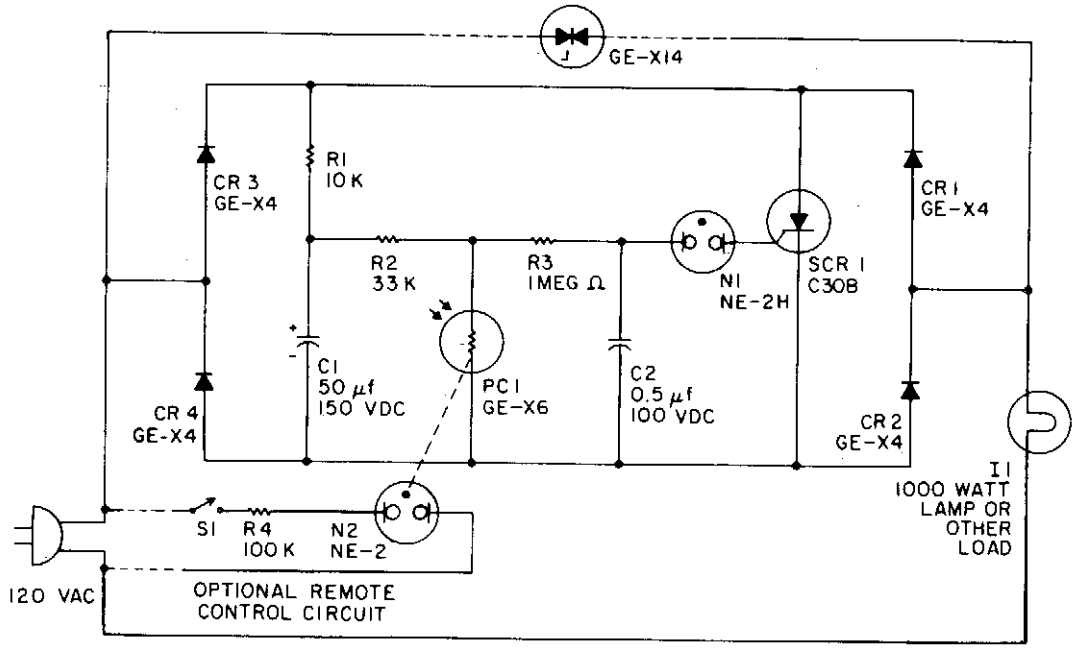

GENERAL ELECTRIC

Fig. 34-10

Circuit Notes

CR1, CR2, CR3, and CR4 form a bridge circuit with the SCR across the dc legs. With light on the photoconductor PC1, C1 charges through R1 to about 150 Vdc. The resistance of PC1 is low when illuminated, so very little voltage appears across it or C2. At about 90 volts C1 starts discharging through R1 and the SCR, but the SCR cannot turn off until C1 is almost completely discharged. When the SCR turns off during the interval line voltage is near zero, the full supply voltage again appears across the bridge, and C1 charges again to a high voltage. The voltage on C2 also starts rising until the neon lamp fires and the cycle repeats. An alternative remote control can be made by adding a second neon lamp, N2, and masking the photocell so it sees only N2. A very sensitive remote control is thus obtained that is completely isolated from the load circuit. For low-voltage remote control a flashlight lamp may be used instead of N2 and operated at about ½ its normal voltage thus giving exceptionally long life. Performance of the photoelectric control may be inverted (flash when the photoconductor is illuminated) by interchanging PC1, and R2. Sensitivity in either the normal or inverted modes can be decreased by partially masking PC1, and can be increased by increasing resistor R2 to about 470 K. To increase on time, increase C1; to increase off time, increase R3.

SEQUENTIAL FLASHER

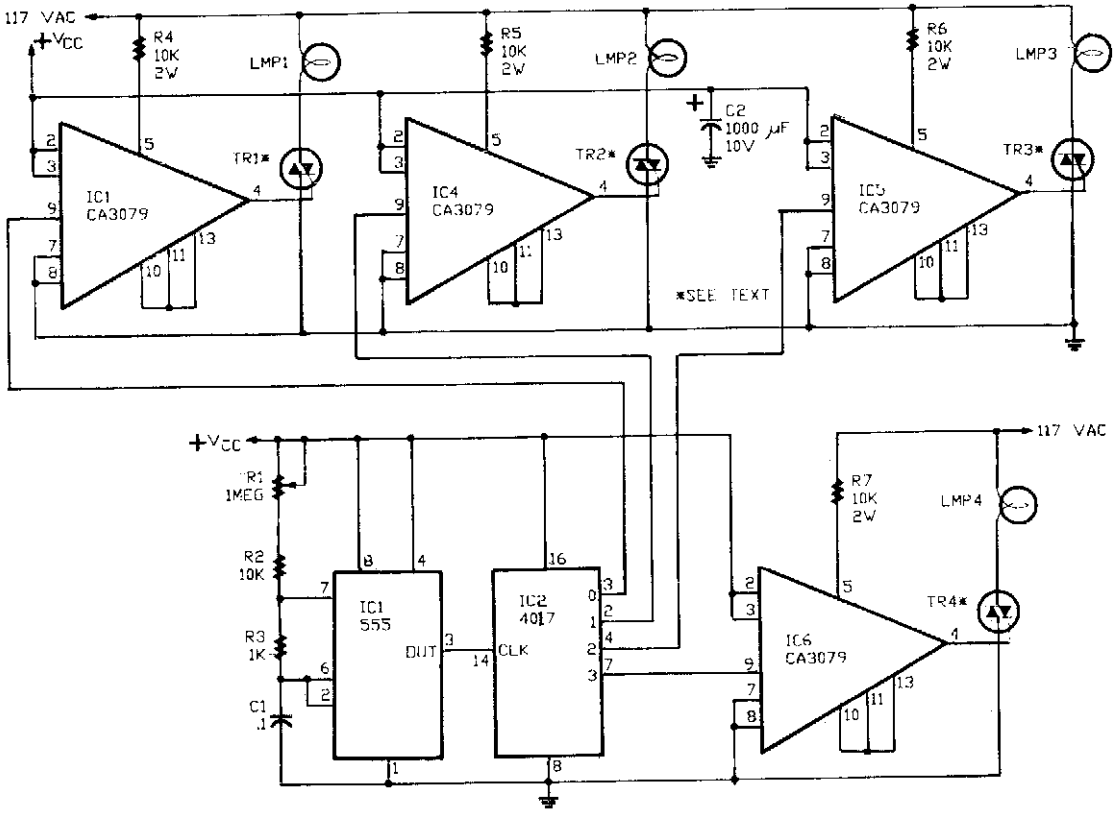

RADIO-ELECTRONICS

Fig. 34-11

Circuit Notes

A 555 timer, IC1, drives a 4017 CMOS decade counter. Each of the 4017's first four outputs drives a CA3079 zero-voltage switch. Pin 9 of the CA3079 is used to inhibit output from pin 4, thereby disabling the string of pulses that IC normally delivers. Those pulses occur every 8.3 ms, i.e., at a rate of 120 Hz. Each pulse has a width of 120 µs. Due to the action of the CA3079, the lamps connected to the TRI-AC's turn on and off near the zero crossing of the ac waveform. Switching at that point increases lamp life by reducing the inrush of current that would happen if the lamp were turned on near the high point of the ac waveform. In addition, switching at the zero crossing reduces Radio-Frequency Interference (RFI) considerably.

CAUTION: The CA3079's are driven directly from the 117-volt ac power line, so use care.

1 kW FLIP-FLOP FLASHER CIRCUIT

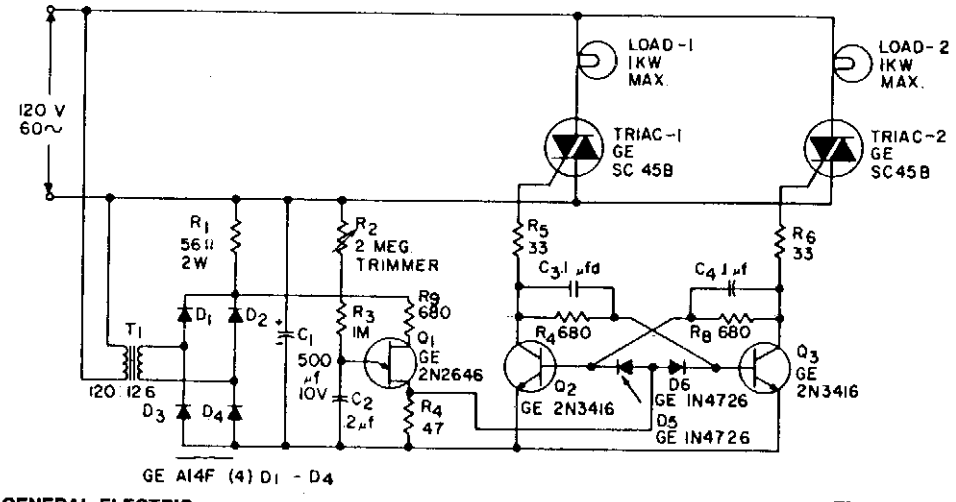

GENERAL ELECTRIC

Fig. 34-12

Circuit Notes

This is an application of the static switch circuit where the control logic is a flip-flop which is controlled by the unijunction transistor. The flashing rate can be adjusted from about 0.1 second to a 10 second cycle time.

LOW FREQUENCY OSCILLATOR-FLASHER

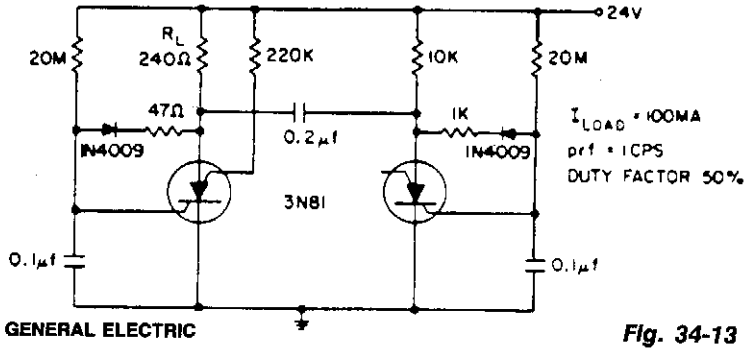

GENERAL ELECTRIC

Fig. 34-13

Circuit Notes

Electrolytic capacitors are unnecessary to generate a 1 cps frequency. As an scs triggers on, the 0.2 μF commutating capacitor turns off the other one and charges its gate capacitor to a negative potential. The gate capacitor charges towards 24 volts through 20 M retriggering its scs. Battery power is delivered to the load with 88% efficiency. The 20 M resistors can be varied to change prf or duty factor.

HIGH DRIVE OSCILLATOR/FLASHER

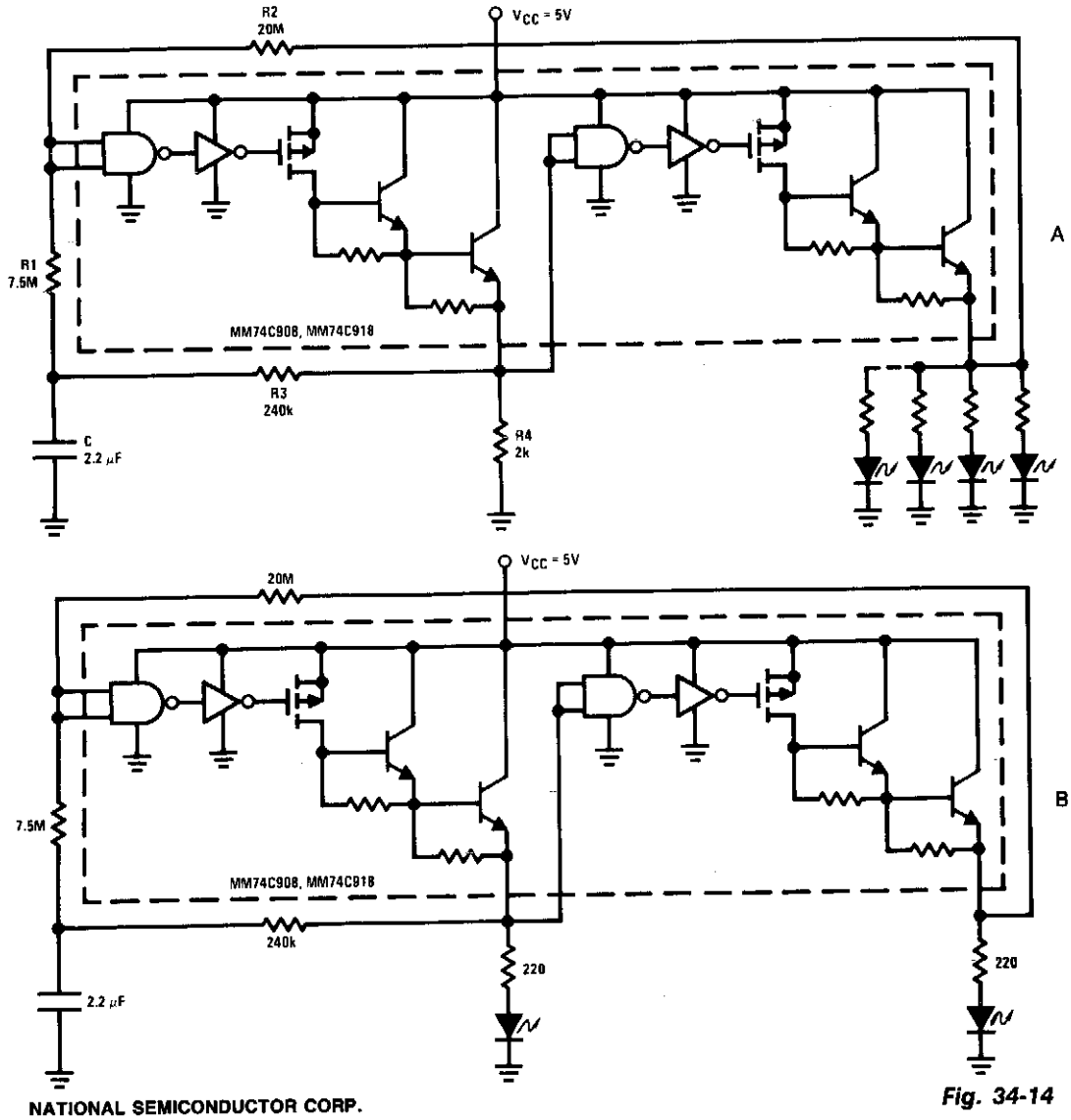

NATIONAL SEMICONDUCTOR CORP.

Fig. 34-14

Circuit Notes

The driver in the package is connected as a Schmitt trigger oscillator (A) where R1 and R2 are used to generate hysteresis. R3 and C are the inverting feedback timing elements and R4 is the pull-down load for the first driver. Because of its current capability, the circuit can be used to drive an array of LEDs or lamps. If resistor R4 is replaced by an LED (plus a current limiting resistor), the circuit becomes a double flasher with the 2 LEDs flashing out of phase (B).

TRANSISTORIZED FLASHERS

Flasher circuit performance as a function of temperature using limit sample transistors.

			AMBIENT TEMPERATURE -40°F	77°F	212°F
CIRUIT #1	Flashes per Minute	min.	58.0	60.0	59.6
		max.	56.7	59.6	58.7
	Flash Duration in %	min.	14.5	14.6	14.3
		max.	15.1	14.9	15.3
CIRCUIT #2	Flashes per Minute	min.	58.6	60.0	59.0
		max.	55.6	58.1	56.4
	Flash Duration in %	min.	26.3	27.5	22.2
		max.	28.8	29.1	29.6
CIRCUIT #3	Flashes per Minute	min.	59.0	60.0	61.5
		max.	55.4	57.7	55.2
	Flash Duration in %	min.	45.2	46.0	48.2
		max.	45.6	46.2	47.0

Circuit Notes

Transistors Q1 and Q2 are connected as a free running multivibrator. The output, at the emitter of Q2, drives the base of the common emitter amplifier Q3, which controls the lamp. This circuit configuration permits the flash duration, the interval between flashes, and the lamp type to be varied independently. Flash duration is proportional to the product of R2C2 while the off interval is proportional to the product of R3C1. Consequently, when the flash timing must be accurately maintained, these component tolerances will have to be held to similar limits.

All three circuits described are designed for barricade warning flasher lights such as used in highway construction. They differ only in flash duration which normally is 15%, 25%, or 50% of the flash rate. Performance has been checked at ambient temperatures of −40°F, 77°F, and 212°F. A GE 5 volt, 90 milliampere type No. 1850 lamp is used.

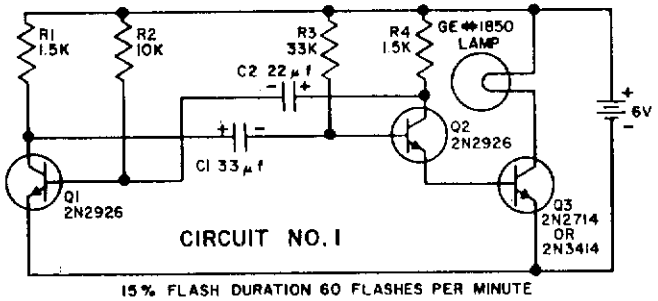

15% FLASH DURATION 60 FLASHES PER MINUTE

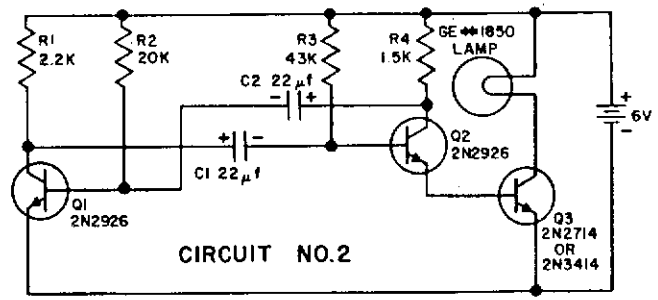

25% FLASH DURATION 60 FLASHES PER MINUTE

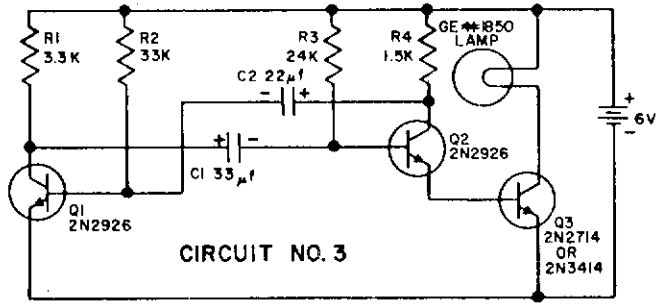

50% FLASH DURATION 60 FLASHES PER MINUTE

Fig. 34-15

GENERAL ELECTRIC

SEQUENTIAL AC FLASHER

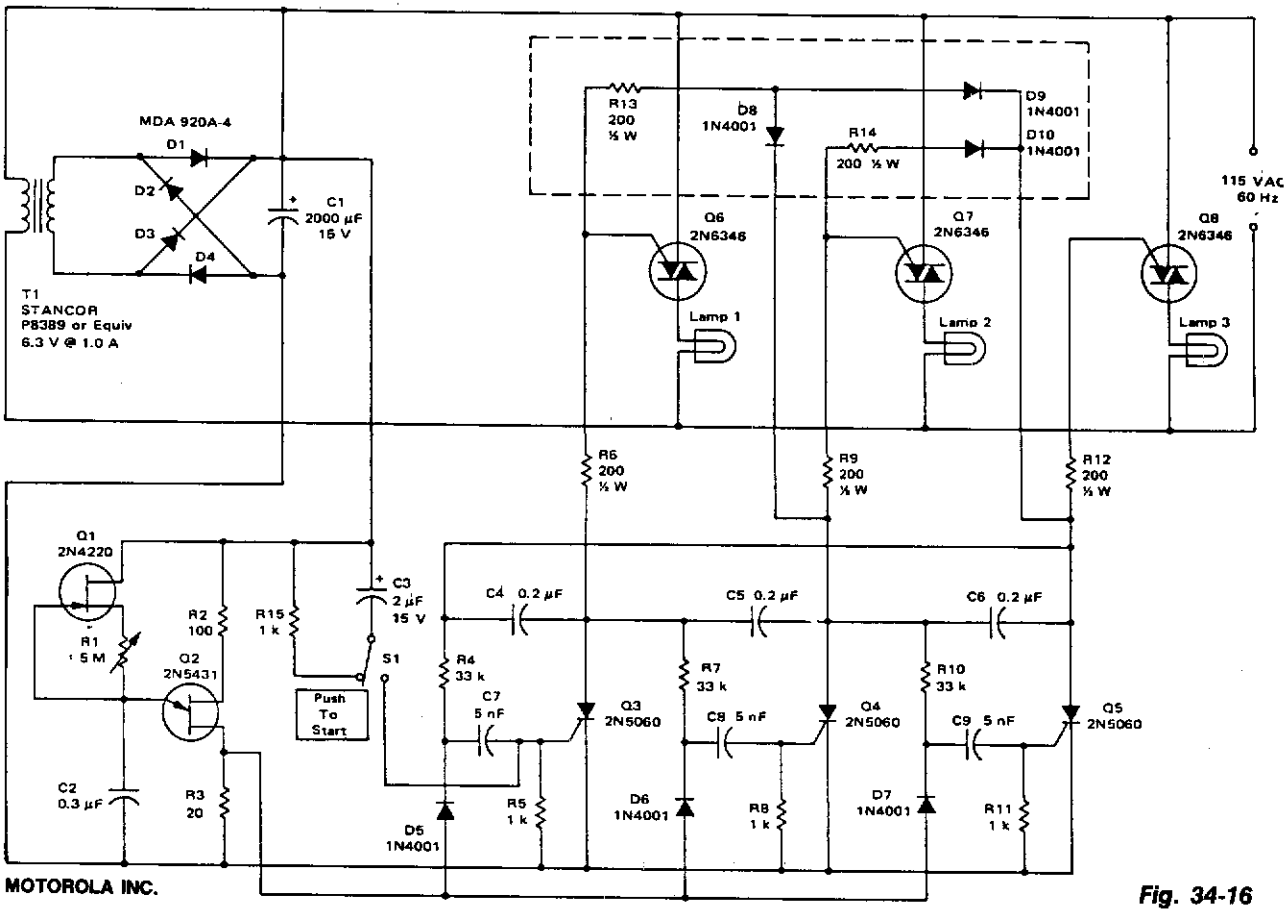

Fig. 34-16

Circuit Notes

This circuit uses a ring counter made up of Q3, Q4 and Q5. Q2 acts as an oscillator which triggers the SCRs Q3, Q4 and Q5 in sequence. When an SCR fires, a 0.2µF capacitor provides commutation, shutting off the previous stage. Triacs Q6, Q7 and Q8 control lamps 1, 2 and 3 respectively.

ASTABLE FLIP-FLOP WITH STARTER

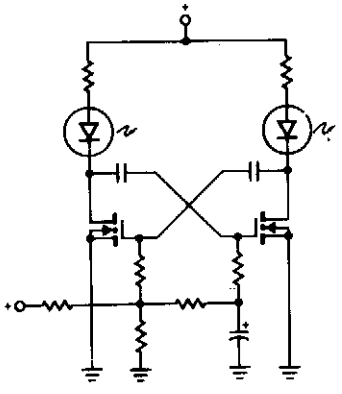

SILICONIX, INC. *Fig. 34-17*

Circuit Notes

A pair of non-zenered MOSPOWER transistors, a pair of LEDs and a simple RC circuit make an easy sequential flasher with almost unlimited sequencing time—from momentary to several seconds. The infinite input resistance of the MOSFET gate allows for very long sequencing times that are impossible when using bipolars. One precaution, though, don't wire your circuit using phenolic or printed circuit boards when looking for slow sequencing (they exhibit too much leakage!).

LED FLASHER USES PUT

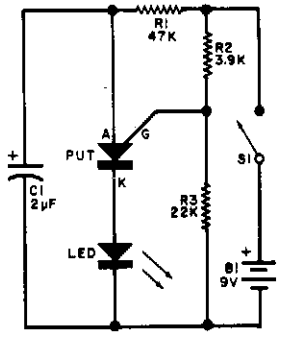

POPULAR ELECTRONICS *Fig. 34-18*

Circuit Notes

This flasher circuit operates as a relaxation oscillator with C1 discharged periodically through the LED as the PUT switches on. The flashing rate is about 100/minute with the component values listed.

35

Flow Detectors

The sources of the following circuits are contained in the Sources section beginning on page 694. The figure number contained in the box of each circuit correlates to the source entry in the Sources section.

Thermally Based Anemometer (Air Flowmeter)
Air Flow Detector

THERMALLY BASED ANEMOMETER (AIR FLOWMETER)

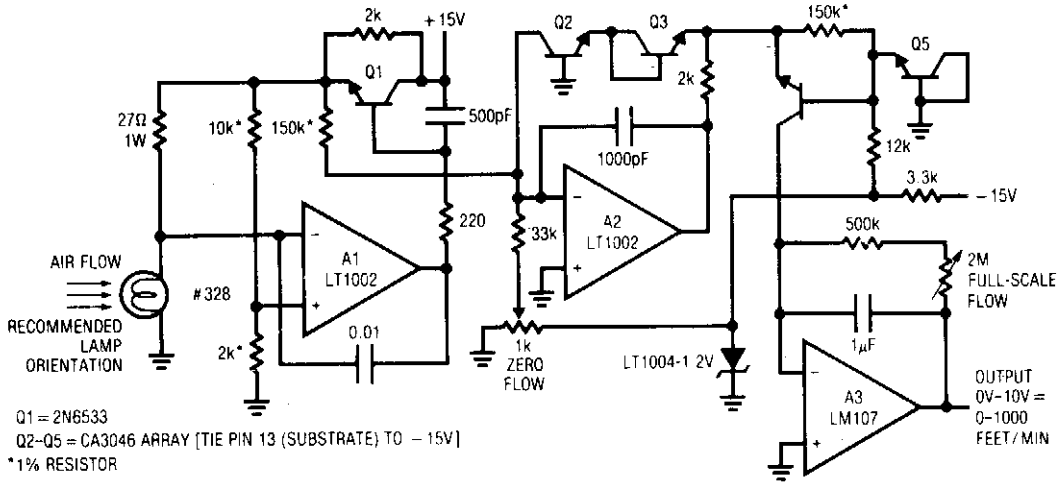

Fig. 35-1

LINEAR TECHNOLOGY CORPORATION

Circuit Notes

This design used to measure air or gas flow works by measuring the energy required to maintain a heated resistance wire at constant temperature. The positive temperature coefficient of a small lamp, in combination with its ready availability, makes it a good sensor. A type 328 lamp is modified for this circuit by removing its glass envelope. The lamp is placed in a bridge which is monitored by A1. A1's output is current amplified by Q1 and fed back to drive the bridge. When power is applied, the lamp is at a low resistance and Q1's emitter tries to come full on. As current flows through the lamp, its temperature quickly rises, forcing its resistance to increase. This action increases A1's negative input potential. Q1's emitter voltage decreases and the circuit finds a stable operating point. To keep the bridge balanced, A1 acts to force the lamp's resistance, hence its temperature, constant. The 20 k - 2 k bridge values have been chosen so that the lamp operates just below the incandescence point.

To use this circuit, place the lamp in the air flow so that its filament is at a 90° angle to the flow. Next, either shut off the air flow or shield the lamp from it and adjust the zero flow potentiometer for a circuit output of 0 V. Then, expose the lamp to air flow of 1000 feet/minute and trim the full flow potentiometer for 10 V output. Repeat these adjustments until both points are fixed. With this procedure completed, the air flowmeter is accurate within 3% over the entire 0-1000 foot/minute range.

AIR FLOW DETECTOR

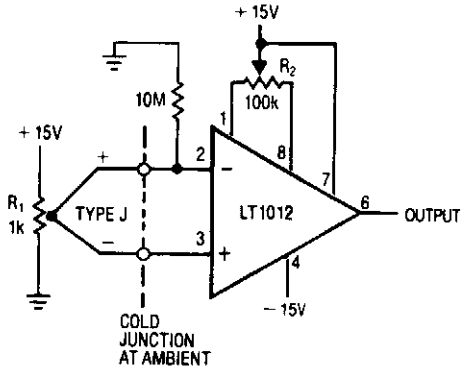

Fig. 35-2

Mount R_1 in airflow.
Adjust R_2 so output goes high when airflow stops.

LINEAR TECHNOLOGY CORP.

36

Fluid and Moisture Detectors

The sources of the following circuits are contained in the Sources section beginning on page 694. The figure number contained in the box of each circuit correlates to the source entry in the Sources section.

Rain Warning Bleeper
Water-Level Indicator
Acid Rain Monitor
Plant-Water Monitor
Water-Level Sensing and Control
Single Chip Pump Controller
Plant-Water Gauge
Liquid Flowmeter

RAIN WARNING BLEEPER

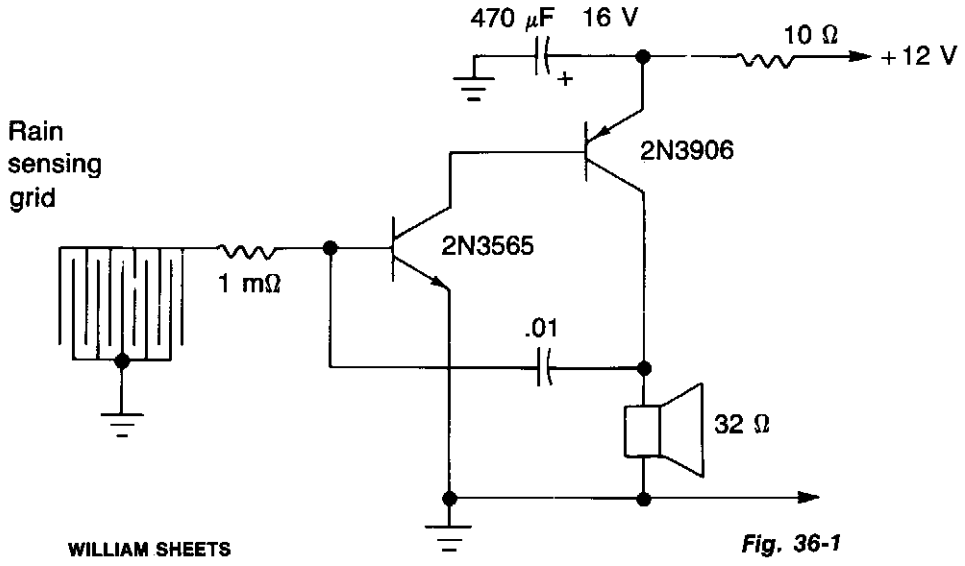

WILLIAM SHEETS

Fig. 36-1

Circuit Notes

One small spot of rain on the sense pad of this bleeper will start this audio warning. It can also be operated by rising water. The circuit has two transistors, with feedback via capacitor C1, but Trl cannot operate as long as the moisture sense pad is dry. When the pad conducts, Tr1 and Tr2 form an audio oscillatory circuit, the pitch depends somewhat on the resistance.

WATER-LEVEL INDICATOR

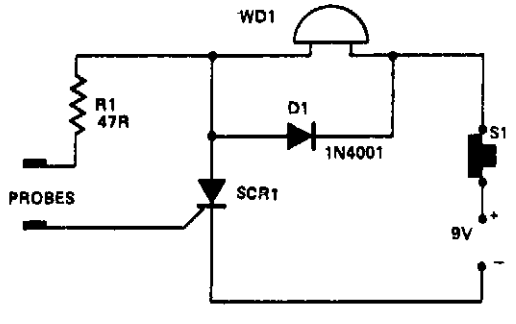

ELECTRONICS TODAY INTERNATIONAL

Fig. 36-2

Circuit Notes

In this a warning device WD1 is in series with SCR1. When the liquid level causes a conductive path between the probes, the SCR conducts sounding WD1. The warning device may be a Sonalert (TM), a lamp or a buzzer. D1 acts as a transient suppressor. Press S1 to reset the circuit.

ACID RAIN MONITOR

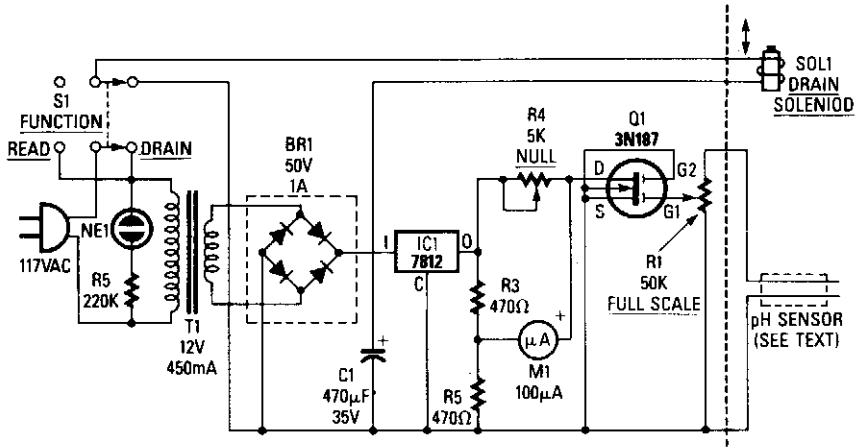

RADIO-ELECTRONICS

Fig. 36-3

Circuit Notes

A bridge rectifier and 12-volt regulator powers the MOSFET sensing circuit. The unregulated output of the bridge rectifier operates the drain solenoid via switch S1. The sensor itself is built from two electrodes, one made of copper, the other of lead. In combination with the liquid trapped by the sensor, they form a miniature lead-acid cell whose output is amplified by MOSFET Q1. The maximum output produced by our prototype cell was about 50 µA. MOSFET Q1 serves as the fourth leg of a Wheatstone bridge. When acidity causes the sensor to generate a voltage, Q1 turns on slightly, so its drain-to-source resistance decreases. That resistance variation causes an imbalance in the bridge, and that imbalance is indicated by meter M1.

PLANT-WATER MONITOR

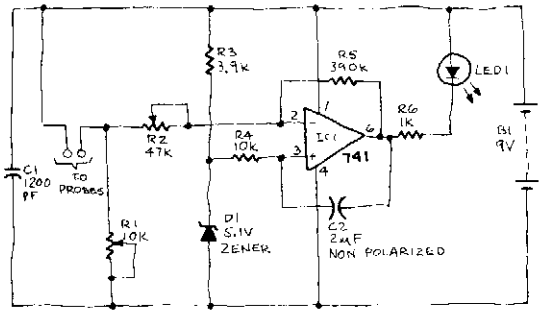

Circuit Notes

When the soil is moist, the LED glows. If the moisture falls below a certain predetermined level, the LED begins to flash. If there is still less moisture, the LED turns off. To calibrate, connect the battery and insert the probe into a container of dry soil. Set R1 to its maximum value then reduce that resistance until the LED begins to flash. The range over which the LED flashes before going out is adjusted using R2.

RADIO-ELECTRONICS

Fig. 36-4

WATER-LEVEL SENSING AND CONTROL

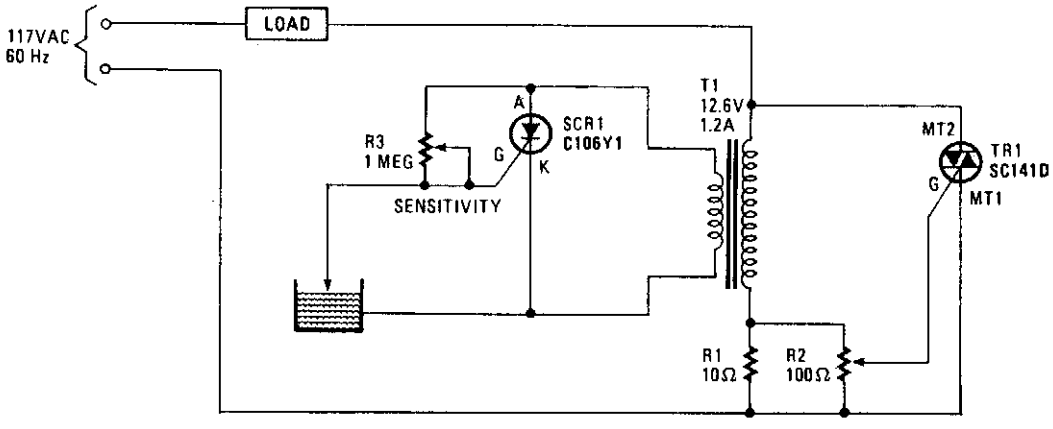

HANDS-ON ELECTRONICS

Fig. 36-5

Circuit Notes

The operation of the circuit is based on the difference in the primary impedance of a transformer when its secondary is loaded and when it is open-circuit. The impedance of the primary of T1 and resistor R1 are in series with the load. The triac's gate-control voltage is developed across parallel resistors R1 and R2. When the water level is low, the probe is out of the water and SCR1 is triggered on. It conducts and imposes a heavy load on transformer T1's secondary winding. That load is reflected back into the primary, gating triac TR1 on, which energizes the load. If the load is an electric value in the water-supply line, it will open and remain open until the water rises and touches the probe, which shorts SCR1's gate and cathode, thereby turning off the SCR1, which effectively open-circuits the secondary. The open-circuit condition—when reflected back to the primary winding—removes the triac's trigger signal, thereby turning the water off. The load may range from a water valve, a relay controlling a pump supplying water for irrigation, or a solenoid valve controlling the water level in a garden lily pond.

SINGLE CHIP PUMP CONTROLLER

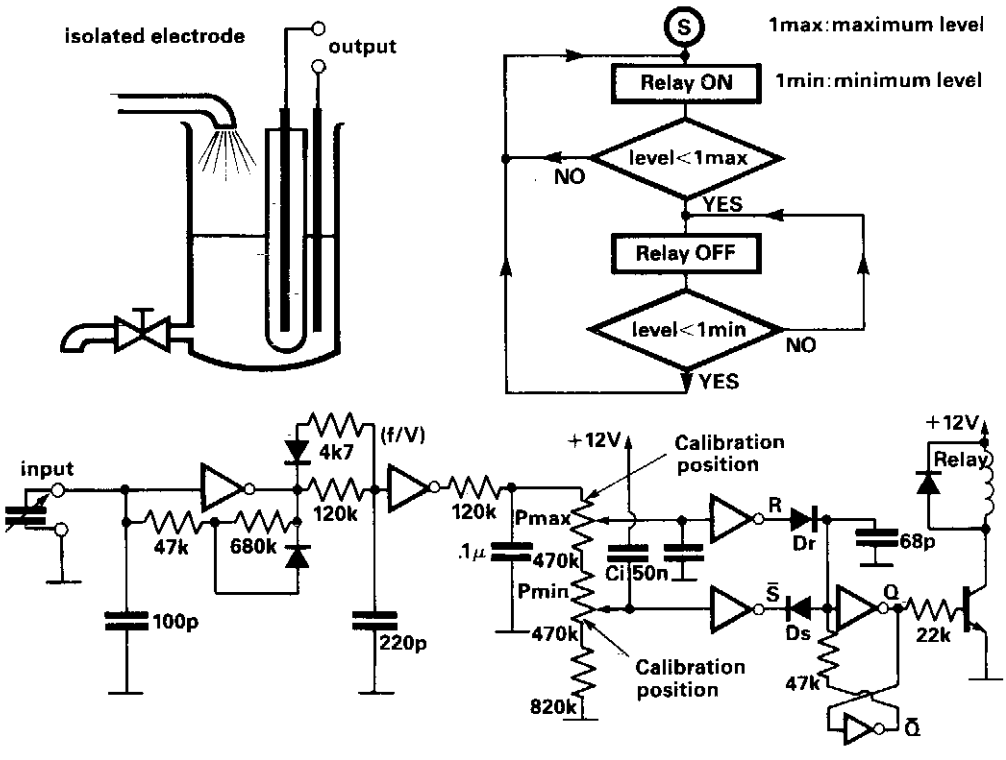

ELECTRONIC ENGINEERING

Fig. 36-6

Circuit Notes

This circuit controls the level of a tank using a bang-bang controlled electrical pump. The actual level of liquid is measured by a capacitive level-meter. The first inverter performs as a capacitance to frequency converter. It is a Schmitt oscillator and its frequency output decreases as the capacitance increases. The second inverter is a monostable which performs as a frequency to voltage converter (f/V). Its output is applied to the maximum and minimum level comparator inputs. Maximum and minimum liquid levels may be set by the potentiometers. The maximum level (1 max) may be preset between the limits: 65 pF less than C (1 max) less than 120 pF. The minimum level is presetable and the limits are: 0 less than C (1 min) less than 25 pF.

PLANT WATER GAUGE

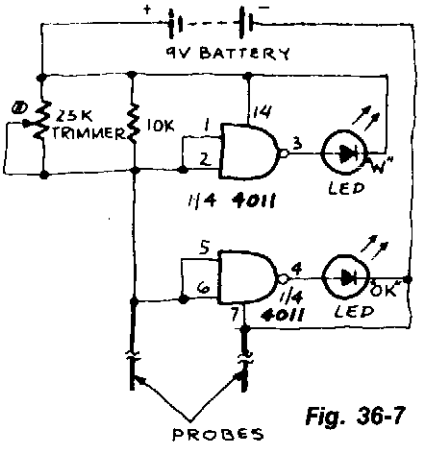

Fig. 36-7

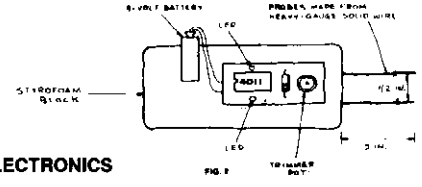

RADIO-ELECTRONICS

Circuit Notes

To calibrate the gauge, connect the battery and press the probes gently into a pot containing a plant that is just on the verge of needing water (stick it in so that only an inch of the probe is left visible at the top). Turn the potentiometer until the "OK" LED lights and then turn it back to the point where that LED goes out and the "W", or "Water", LED just comes on. The device should now be properly adjusted.

LIQUID FLOWMETER

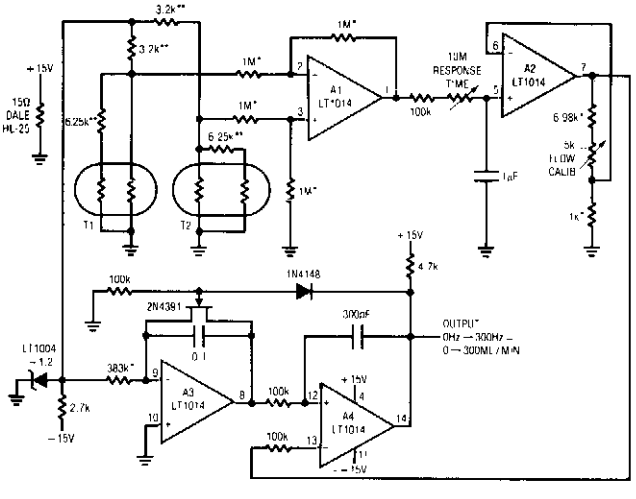

Fig. 36-8

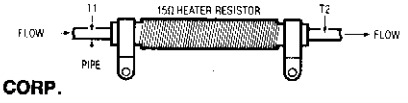

*1% FILM RESISTOR
**SUPPLIED WITH YSI THERMISTOR NETWORK
T1, T2 YSI THERMISTOR NETWORK = #44201
FLOW IN PIPE IS INVERSELY PROPORTIONAL TO RESISTANCE OF T1–T2 TEMPERATURE DIFFERENCE.
A1–A2 PROVIDE GAIN. A3, A4 PROVIDE LINEARIZED FREQUENCY OUTPUT.

LINEAR TECHNOLOGY CORP.

37
Frequency Meters

The sources of the following circuits are contained in the Sources section beginning on page 694. The figure number contained in the box of each circuit correlates to the source entry in the Sources section.

Power Frequency Meter
Low Cost Frequency Indicator

POWER-FREQUENCY METER

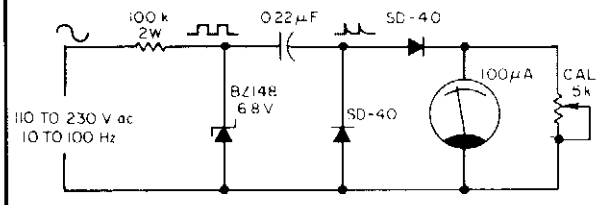

ELECTRONIC DESIGN

Fig. 37-1

Circuit Notes

The meter uses a zener diode to form square waves from input sine waves. After calibration with the 5 k ohm potentiometer, the 100 μA meter reads directly in hertz.

LOW COST FREQUENCY INDICATOR

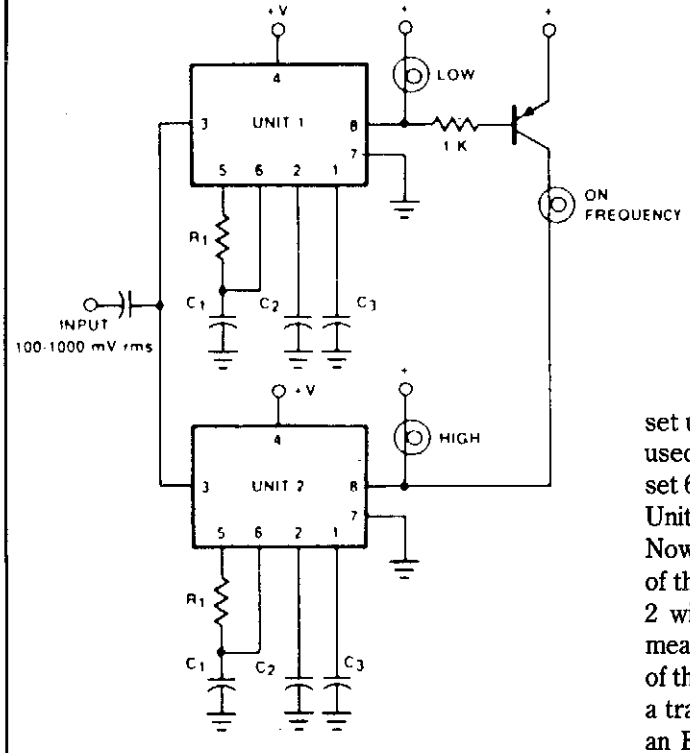

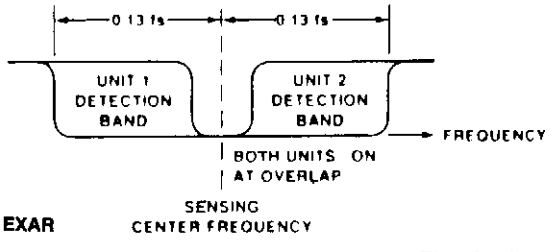

EXAR

Fig. 37-2

Circuit Notes

The circuit shows how two tone decoders set up with overlapping detection bands can be used for a go/no go frequency meter. Unit 1 is set 6% above the desired sensing frequency and Unit 2 is set 6% below the desired frequency. Now, if the incoming frequency is within 13% of the desired frequency, either Unit 1 or Unit 2 will give an output. If both units are on, it means that the incoming frequency is within 1% of the desired frequency. Three light bulbs and a transistor allow low cost read-out. The IC is an EXAR 567.

38

Frequency Multiplier and Divider Circuits

The sources of the following circuits are contained in the Sources section beginning on page 694. The figure number contained in the box of each circuit correlates to the source entry in the Sources section.

Nonselective Frequency Tripler Uses Transistor Saturation Characteristics
Frequency Doubler Works to 1 MHz
Low Frequency Divider
Frequency Divider

NONSELECTIVE FREQUENCY TRIPLER USES TRANSISTOR SATURATION CHARACTERISTICS

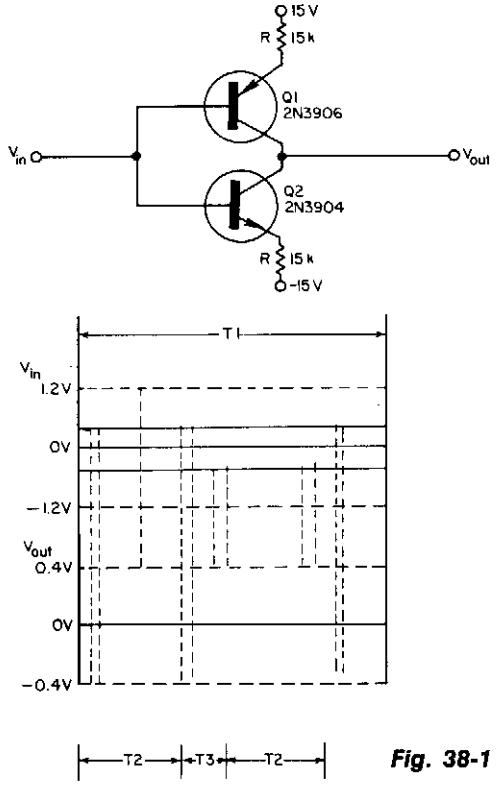

Fig. 38-1

ELECTRONIC DESIGN

Circuit Notes

The turn-on and turn-off characteristics of two complementary transistors can be combined to attain nonselective frequency tripling. The resulting circuit handles any periodic waveform with nonvertical sides. Each input signal peak produces three output signal peaks. The additional peaks occur where the input signal causes saturation of one of the two transistors. The circuit operates over a frequency range from dc to the upper limits of the complementary transistor pair. About the only disadvantage of the circuit is the lack of symmetry of the output signal peaks.

FREQUENCY DOUBLER WORKS TO 1 MHz

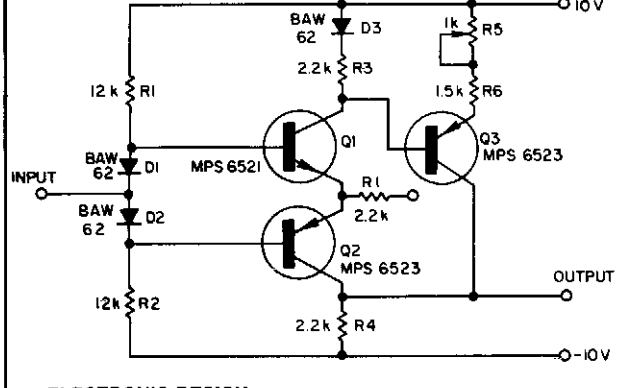

ELECTRONIC DESIGN

Fig. 38-2

Circuit Notes

Adding components Q3, D3, and resistors R3 through R6 to a conventional complementary symmetry class AB buffer can double the frequency of an input sine wave.

LOW FREQUENCY DIVIDER

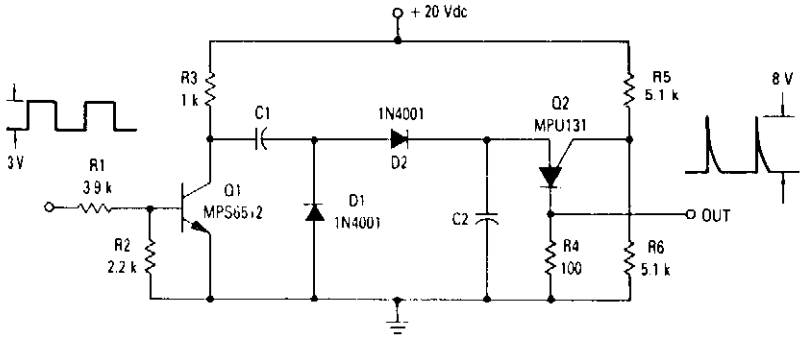

TABLE

C_1	C_2	Division
0.01 μF	0.01 μF	2
0.01 μF	0.02 μF	3
0.01 μF	0.03 μF	4
0.01 μF	0.04 μF	5
0.01 μF	0.05 μF	6
0.01 μF	0.06 μF	7
0.01 μF	0.07 μF	8
0.01 μF	0.08 μF	9
0.01 μF	0.09 μF	10
0.01 μF	0.1 μF	11

MOTOROLA

Fig. 38-3

Circuit Notes

The ratio of capacitors C1 and C2 determines division. With a positive pulse applied to the base of Q1, assume that C1 = C2 and that C1 and C2 are discharged. When Q1 turns off, both C1 and C2 charge to 10 volts each through R3. On the next pulse to the base of Q1, C1 is again discharged but C2 remains charged to 10 volts. As Q1 turns off this time, C1 and C2 again charge. This time C2 charges to the peak point firing voltage of the PUT causing it to fire. This discharges capacitor C2 and allows capacitor C1 to charge to the line voltage. As soon as C2 discharges and C1 charges, the PUT turns off. The next cycle begins with another positive pulse on the base of Q1 which again discharges C1. The input and output frequency can be approximated by the equation

$$f_{in} = \frac{(C1 = C2)}{C1} f_{out}$$

For a 10 kHz input frequency with an amplitude of 3 volts, the table shows the values for C1 and C2 needed to divide by 2 to 11.

FREQUENCY DIVIDER

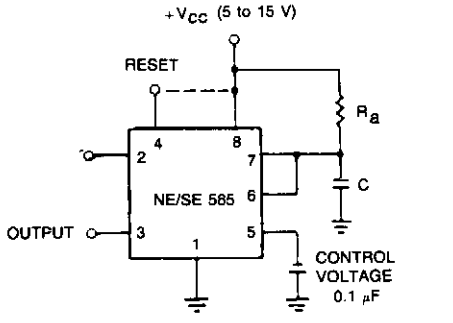

Schematic Diagram

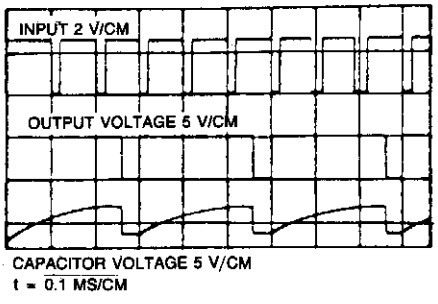

Expected Waveforms

SIGNETICS

Fig. 38-4

Circuit Notes

If the input frequency is known, the timer can easily be used as a frequency divider by adjusting the length of the timeing cycle. Figure shows the waveforms of the timer when used as a divide-by-three circuit. This application makes use of the fact that this circuit cannot be retriggered during the timing cycle.

39

Frequency-to-Voltage Converters

The sources of the following circuits are contained in the Sources section beginning on page 694. The figure number contained in the box of each circuit correlates to the source entry in the Sources section.

Frequency-to-Voltage Converters

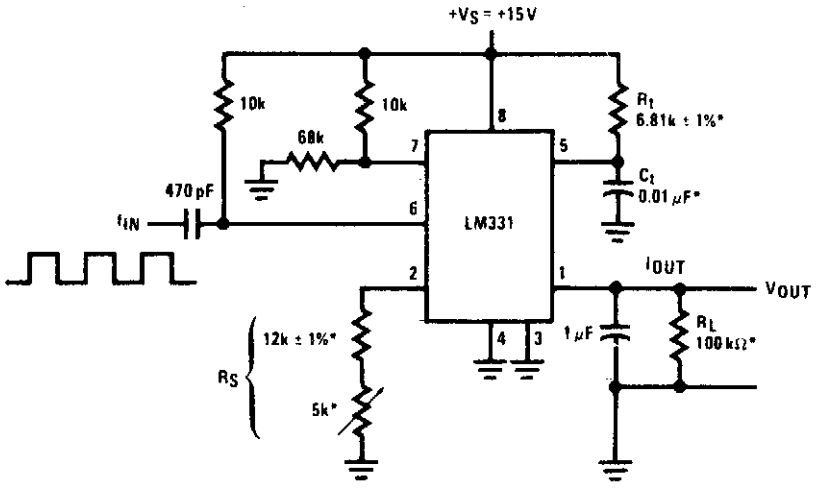

TL/H/5680–7

$$V_{OUT} = f_{IN} \times 2.09V \times \frac{R_L}{R_S} \times (R_tC_t)$$

*Use stable components with low temperature coefficients.

Simple Frequency-to-Voltage Converter, 10 kHz Full-Scale, ±0.06% Non-Linearity

NATIONAL SEMICONDUCTOR CORP. *Fig. 39-1*

Circuit Notes

In these applications, a pulse input at f_{IN} is differentiated by a C-R network and the negative-going edge at pin 6 causes the input comparator to trigger the timer circuit. Just as with a V-to-F converter, the average current flowing out of pin 1 is $I_{AVERAGE} = i \times (1.1\ R_1C_1) \times f$. In this simple circuit, this current is filtered in the network R_L = 100 k ohm and 1 μF. The ripple will be less than 10 mV peak, but the response will be slow, with a 0.1 second time constant, and settling of 0.7 second to 0.1%

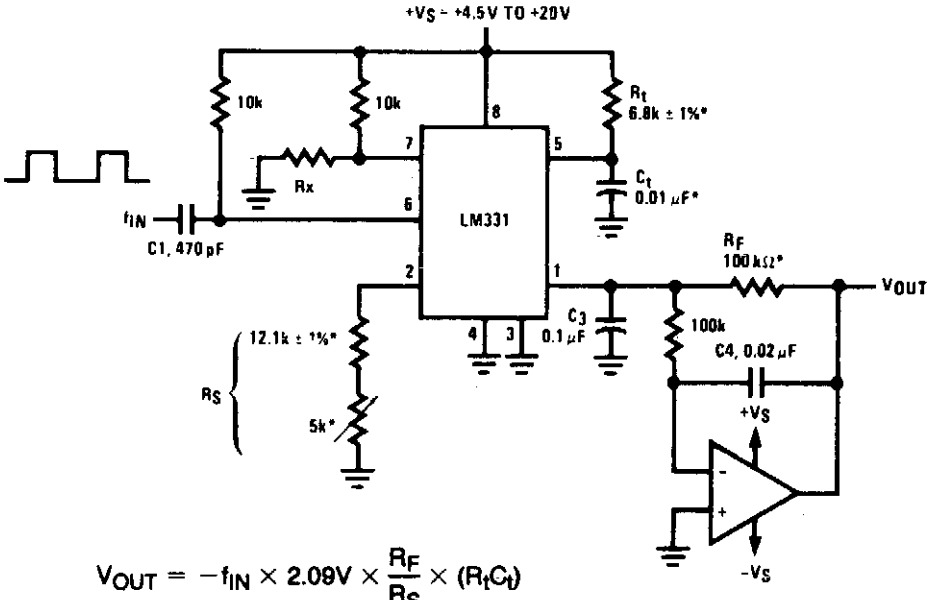

$$V_{OUT} = -f_{IN} \times 2.09V \times \frac{R_F}{R_S} \times (R_tC_t)$$

TL/H/5680–8

$$\text{SELECT Rx} = \frac{(V_S - 2V)}{0.2\ mA}$$

*Use stable components with low temperature coefficients.

Precision Frequency-to-Voltage Converter, 10 kHz Full-Scale with 2-Pole Filter, ±0.01% Non-Linearity Maximum

accuracy. In the precision circuit, an operational amplifier provides a buffered output and also acts as a 2-pole filter. The ripple will be less than 5 mV peak for all frequencies above 1 kHz, and the response time will be much quicker than in Part 1. However, for input frequencies below 200 Hz, this circuit will have worse ripple than the figure. The engineering of the filter time-constants to get adequate response and small enough ripple simply requires a study of the compromises to be made. Inherently, V-to-F converter response can be fast, but F-to-V response cannot.

40
Function Generator Circuits

The sources of the following circuits are contained in the Sources section beginning on page 694. The figure number contained in the box of each circuit correlates to the source entry in the Sources section.

Quad Op Amp Generates Four Different Synchronized Waveforms Simultaneously
A Sine/Cosine Generator for 0.1-10 kHz
Oscillator or Amplifier with Wide Frequency Range
Linear Triangle/Square Wave VCO
Circuit for Multiplying Pulse Widths
Programmable Voltage Controlled Frequency Synthesizer
Emitter-Coupled RC Oscillator
Voltage Controlled High Speed One Shot
Ramp Generator with Variable Reset Level
555 Astable with Low Duty Cycle
Monostable Using Video Amplifier and Comparator
UJT Monostable Circuit Insensitive to Change in Bias Voltage
Astable Multivibrator
Waveform Generator
Linear Ramp Generator
Function Generator
Waveform Generator
Single Supply Function Generator
Precise Wave Generator

QUAD OP AMP GENERATES FOUR DIFFERENT SYNCHRONIZED WAVEFORMS SIMULTANEOUSLY

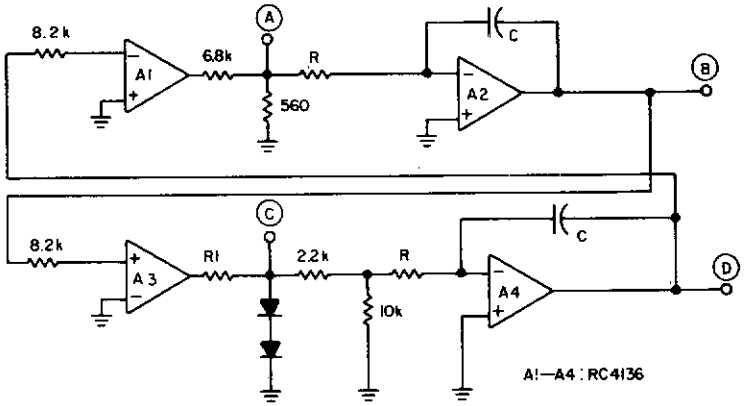

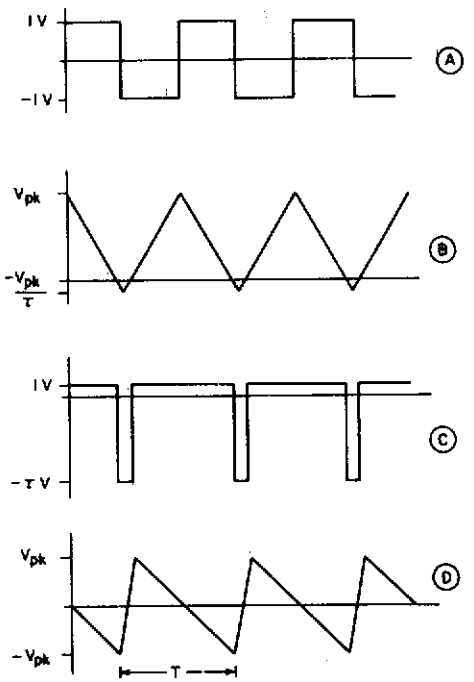

R1(kΩ)	τ	Duty cycle (%)
0.3	10.4	8.8
0.5	10.2	8.9
1	9.85	9.2
4	8.0	11.1
10	5.86	14.6
20	4.04	19.84
50	2.09	32.4
100	1.16	46.30
117.8	1	50

Fig. 40-1

ELECTRONIC DESIGN

Circuit Notes

A quad op amp can simultaneously generate four synchronized waveforms. The two comparators (A1 and A3) produce square and pulse waves, while the two integrators (A2 and A4) give triangular and sawtooth waves. Resistor R1 sets the duty cycle and the frequency, along with resistors R and capacitors C.

A SINE/COSINE GENERATOR FOR 0.1 - 10 kHz

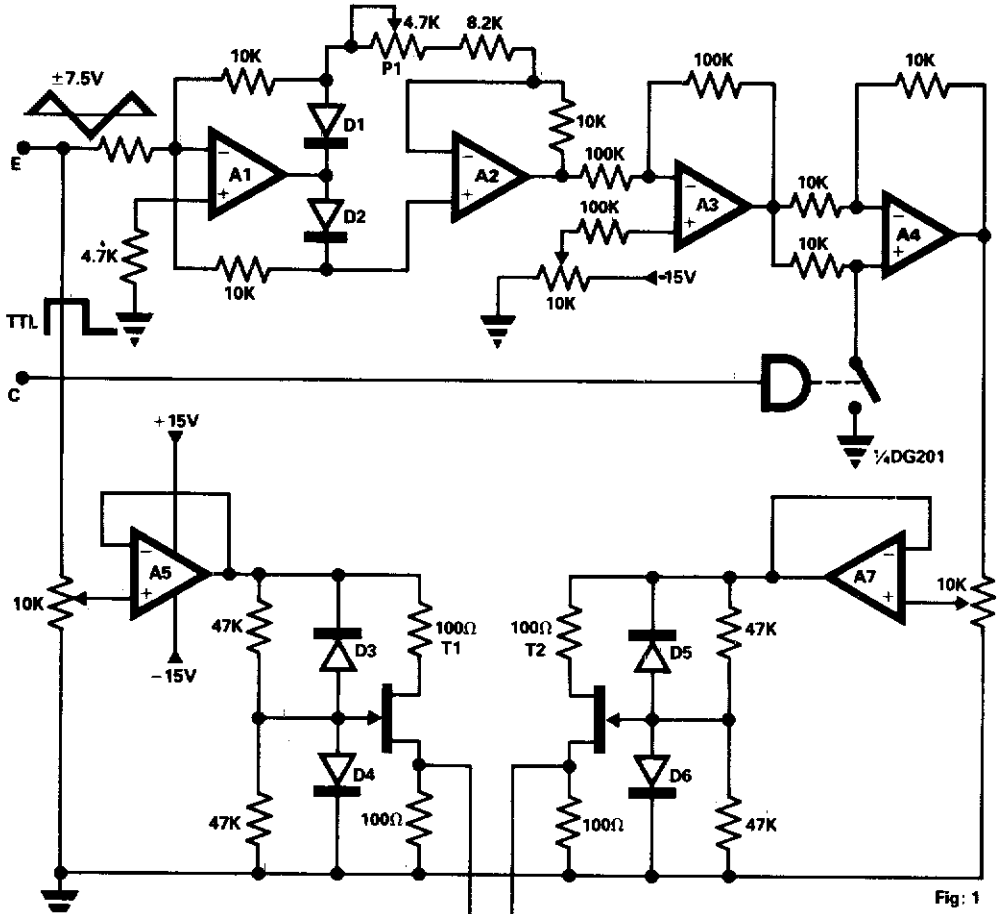

Fig: 1

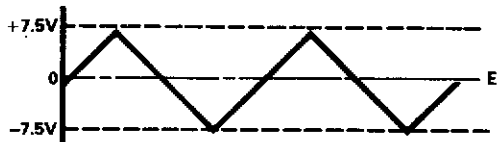

Fig. 40-2

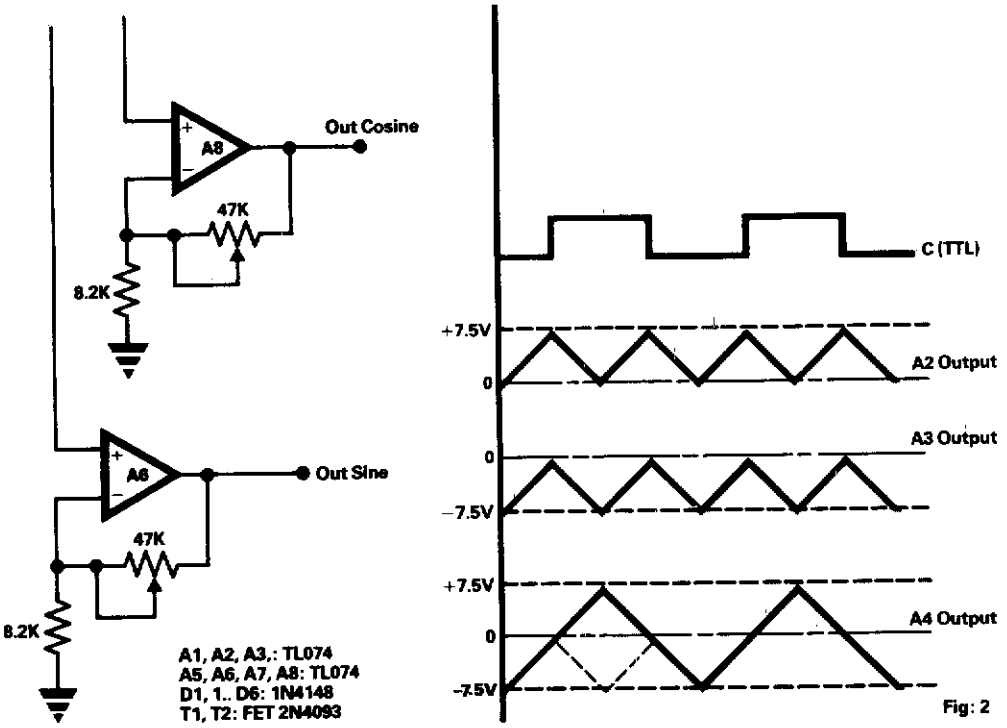

Fig: 2

Circuit Notes

The scheme presented delivers waveforms from any function generator producing a triangular output and a synchronized TTL square wave. A1 and A2 act as a two-phase current rectifier by inverting the negative voltage appearing at the input of A1.

Positive input: Both A1 and A2 work as unity gain followers, D1 and D2 being in the off-state.

Negative input: A1 has a $-\frac{2}{3}$ gain (D1 off and D2 on), A2 has a $+\frac{1}{2}$ gain and the total voltage transfer is -1 between output and input. P1 allows a fine trimming of the -1 gain for the negative input signals. A3 adds a continuous voltage to the rectified positive signal in order to attack A4 which acts as a $\pm$ multiplier commanded by the TTL input through the analog switch. The signal polarity is reconstructed and the output of A4 delivers a triangular waveform shifted by 90° with respect to the input signal, Fig. 2. The original and the shifted voltages are fed into the triangle to sine converters through A5 and A7 working as impedance converters. Over the frequency dynamic ranges from 0.1 Hz to 10 kHz, the phase shift is constant and the distortion on the sine voltage is less than 1%.

OSCILLATOR OR AMPLIFIER WITH WIDE FREQUENCY RANGE

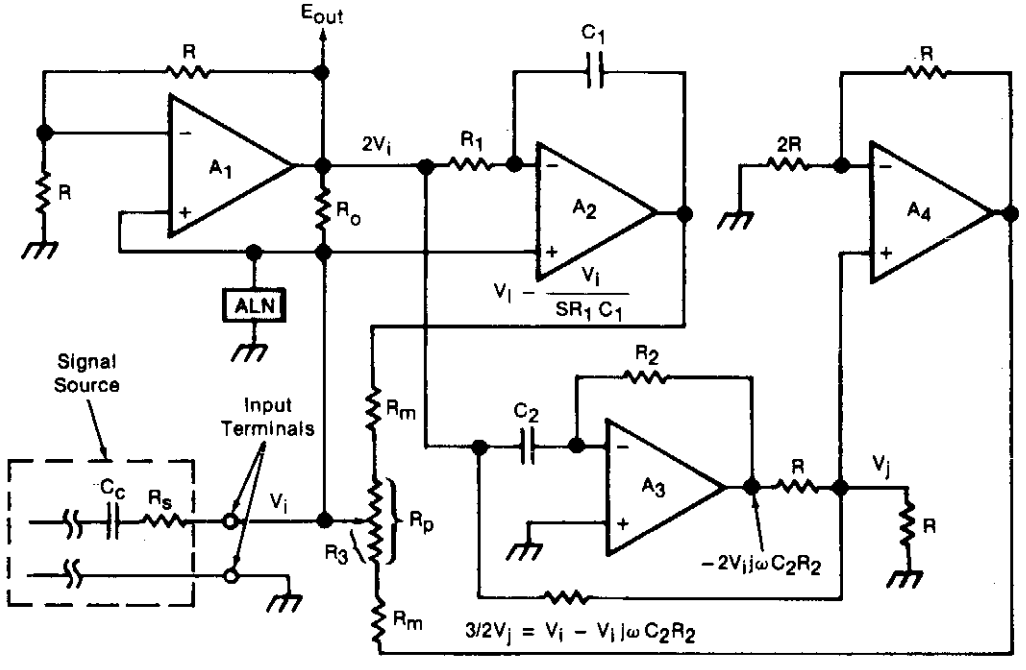

NOTES: 1. A_1, A_2, A_3, and A_4 are operational amplifiers
2. ALN = Amplitude-Limiting Network

NASA

Fig. 40-3

Circuit Notes

An oscillator/amplifier is resistively tunable over a wide frequency range. Feedback circuits containing operational amplifiers, resistors, and capacitors synthesize the electrical effects of an inductance and capacitance in parallel between the input terminals. The synthetic inductance and capacitance, and, therefore, the resonant frequency of the input admittance, are adjusted by changing a potentiometer setting. The input signal is introduced in parallel to the noninverting input terminals of operational amplifiers A_1 and A_2 and to the potentiometer cursor. The voltages produced by the feedback circuits in response to input voltage V_1 are indicated at the various circuit nodes.

LINEAR TRIANGLE/SQUARE WAVE VCO

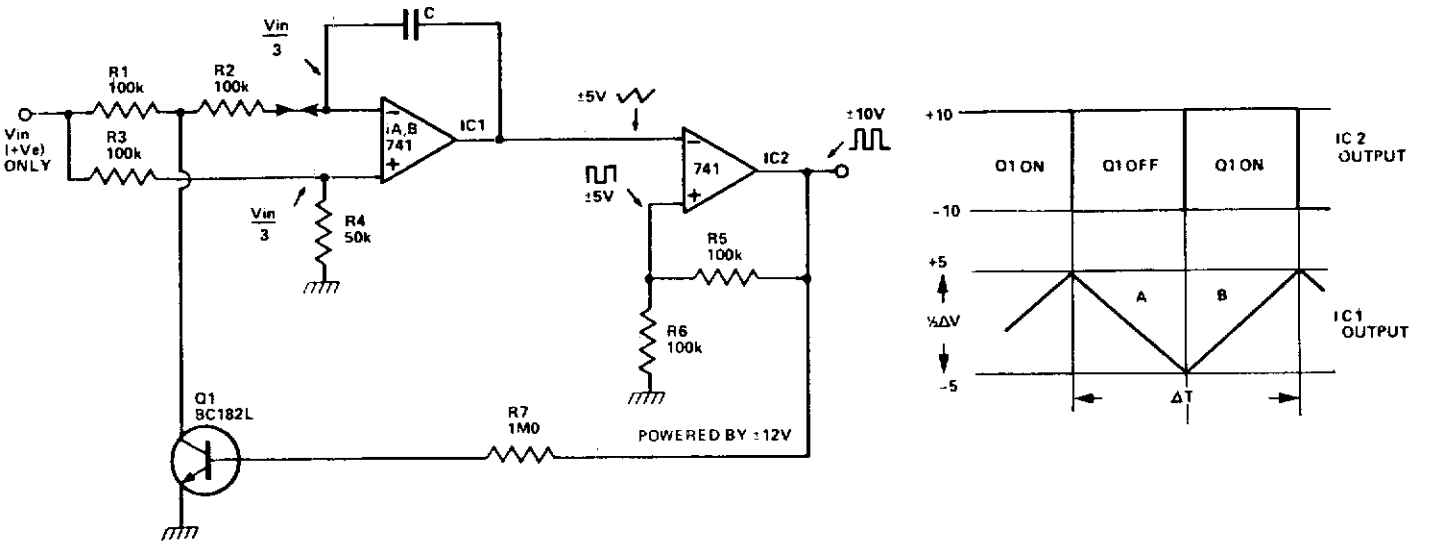

Fig. 40-4

ELECTRONICS TODAY INTERNATIONAL

Circuit Notes

The VCO has two buffered outputs; a triangle wave and a square wave. Frequency is dependent on the output voltage swing of the Schmitt trigger, IC2. Superior performance can be obtained by replacing Q1 with a switching FET. Fast FET op amps will improve high frequency performance.

CIRCUIT FOR MULTIPLYING PULSE WIDTHS

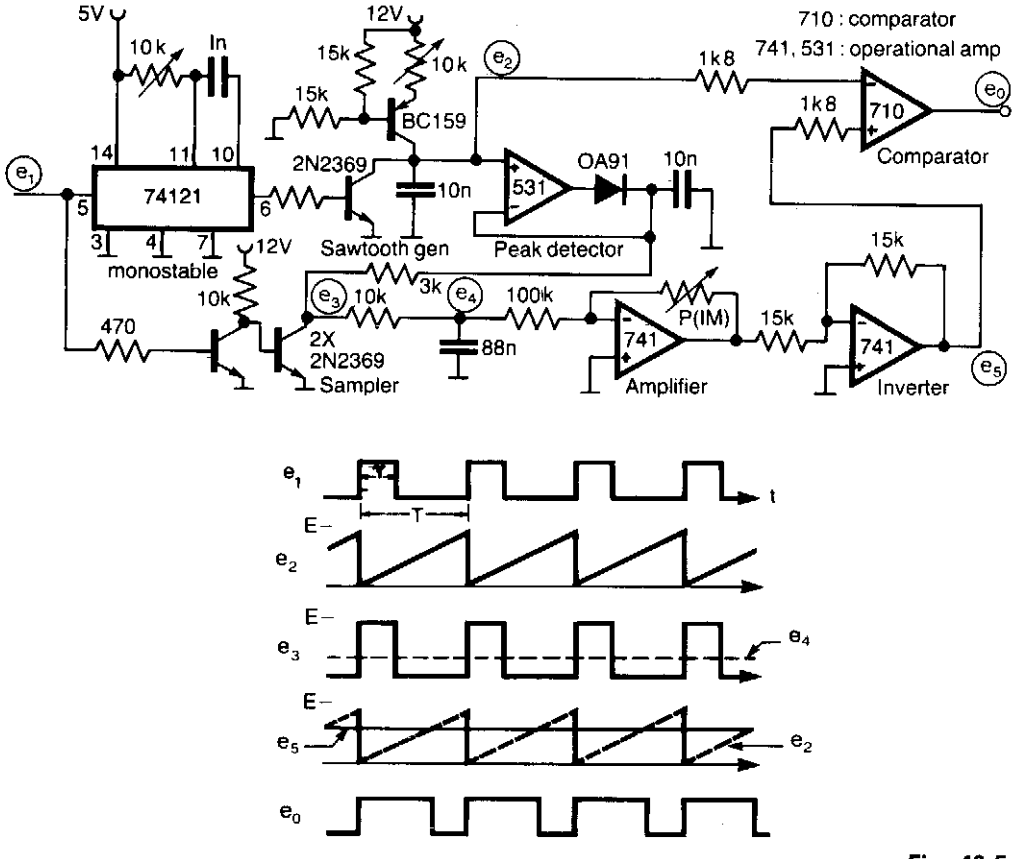

ELECTRONIC ENGINEERING

Fig. 40-5

Circuit Notes

A circuit for multiplying the width of incoming pulses by a factor greater or less than unity is simple to build and has the feature that the multiplying factor can be selected by adjusting one potentiometer only. The multiplying factor is determined by setting the potentiometer P in the feedback of a 741 amplifier. The input pulses e_1 of width τ and repetition period T is used to trigger a sawtooth generator at its rising edges to produce the waveform e_2 having a peak value of (E) volt. This peak value is then sampled by the input pulses to generate the pulse train e_3 having an average value of $e_4 (= E\ E\tau/T)$ which is proportional to τ and independent on T. The dc voltage e_4 is amplified by a factor k and compared with sawtooth waveform e_2 giving output pulses of duration k τ. The circuit is capable of operating over the frequency range 10 kHz - 100 kHz.

PROGRAMMABLE VOLTAGE CONTROLLED FREQUENCY SYNTHESIZER

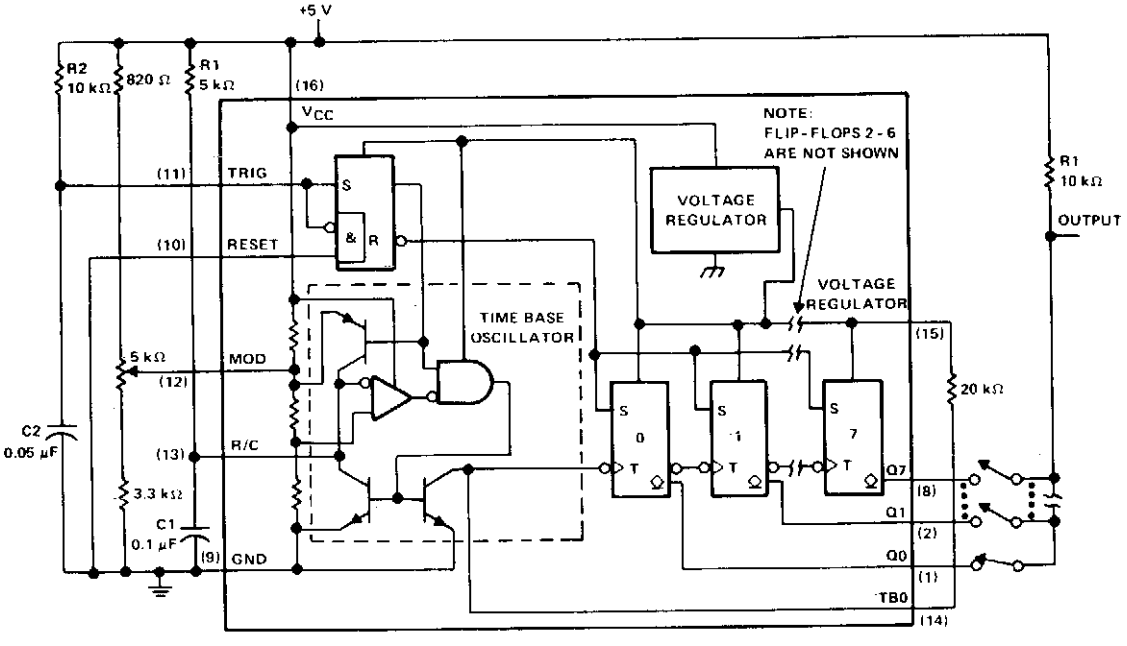

TEXAS INSTRUMENTS

Fig. 40-6

Circuit Notes

The μA2240 consists of four basic circuit elements: (1) a time-base oscillator, (2) an eight-bit counter, (3) a control flip-flop, and (4) a voltage regulator. The basic frequency of the time-base oscillator (TBO) is set by the external time constant determined by the values of R1 and C1 (1?R1C1 = 2 kHz). The open-collector output of the TBO is connected to the regulator output via a 20 k ohm pull-up resistor, and drives the input to the eight-bit counter. At power-up, a positive trigger pulse is detected across C2 which starts the TBO and sets all counter outputs to a low state. Once the μA2240 is initially triggered, any further trigger inputs are ignored until it is reset. In this astable operation, the μA2240 will free-run from the time it is triggered until it receives an external reset signal. Up to 255 discrete frequencies can be synthesized by connecting different counter outputs.

EMITTER-COUPLED RC OSCILLATOR

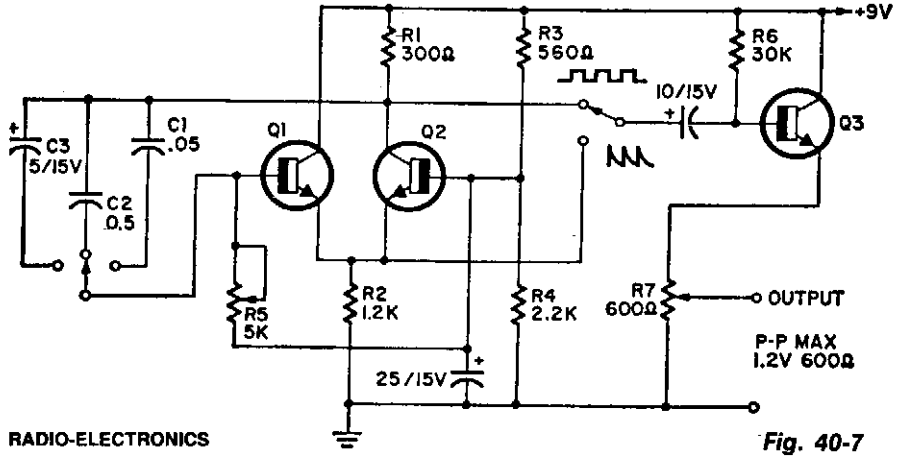

RADIO-ELECTRONICS

Fig. 40-7

Circuit Notes

The circuit covers 15 Hz-30 kHz and is useful as a function generator. The 2N2926 or equivalent transistors can be used.

VOLTAGE CONTROLLED HIGH SPEED ONE SHOT

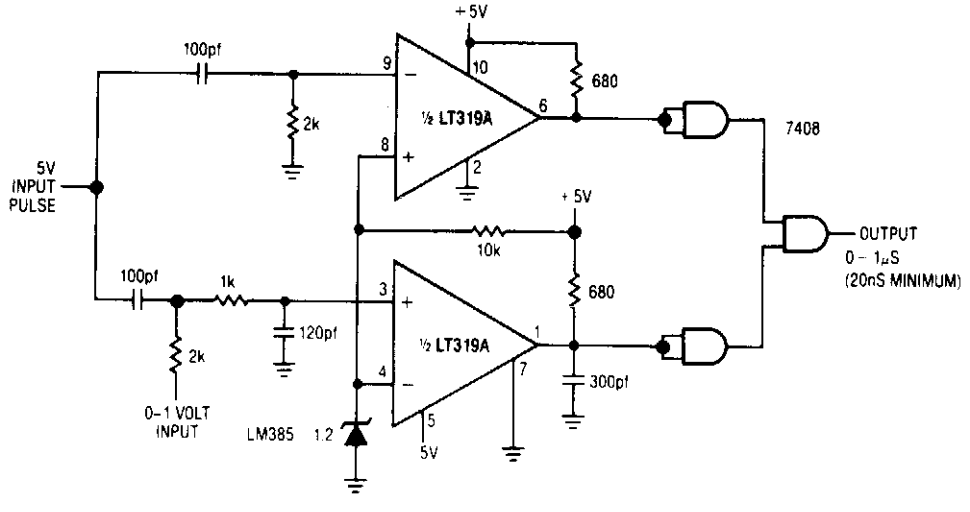

LINEAR TECHNOLOGY CORP.

Fig. 40-8

RAMP GENERATOR WITH VARIABLE RESET LEVEL

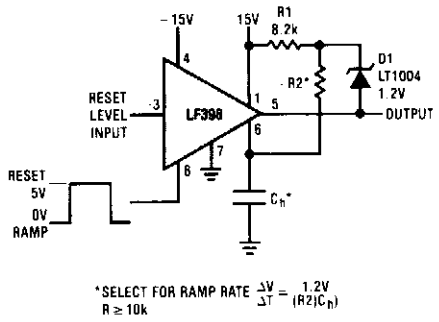

Fig. 40-9

LINEAR TECHNOLOGY CORP.

555 ASTABLE WITH LOW DUTY CYCLE

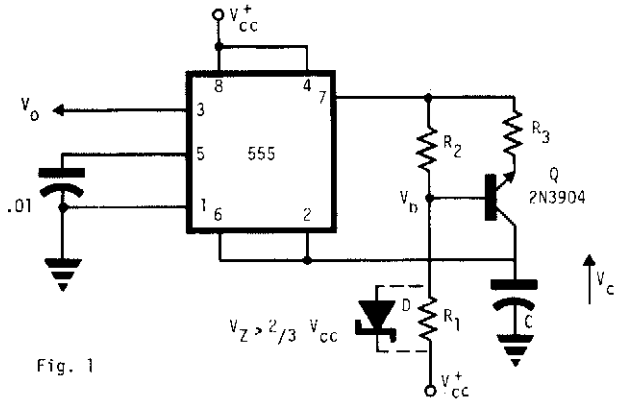

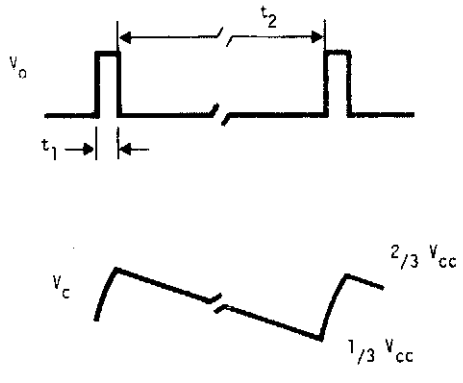

ELECTRONIC ENGINEERING

Fig. 40-10

Circuit Notes

This free-running multivibrator uses an external current sink to discharge the timing capacitor, C. Therefore, interval t_2 may easily be 1000 × the pulse duration, t_1, which defines a positive output. Capacitor voltage, V_C, is a negative going ramp with exponential rise during the pulse output periods.

MONOSTABLE USING VIDEO AMPLIFIER AND COMPARATOR

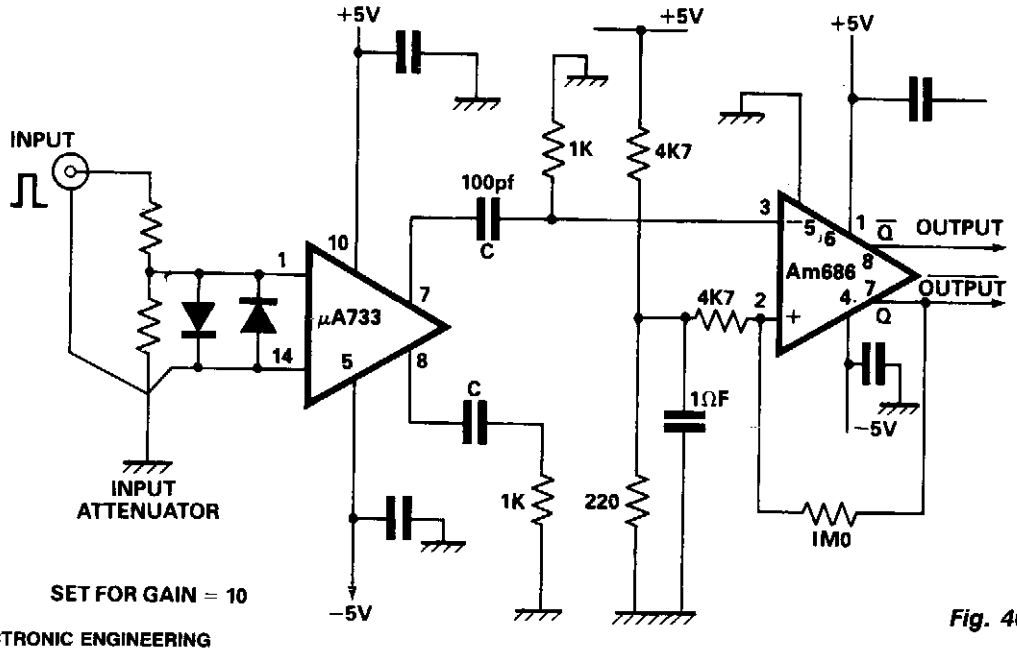

ELECTRONIC ENGINEERING

Fig. 40-11

Circuit Notes

The output of a video amplifier is differentiated before being fed to a Schottky comparator. The propagation delay is reduced to typically 10ns. The output pulse width is set by the value of C, 100pf giving a pulse of about 90ns duration.

UJT MONOSTABLE CIRCUIT INSENSITIVE TO CHANGE IN BIAS VOLTAGE

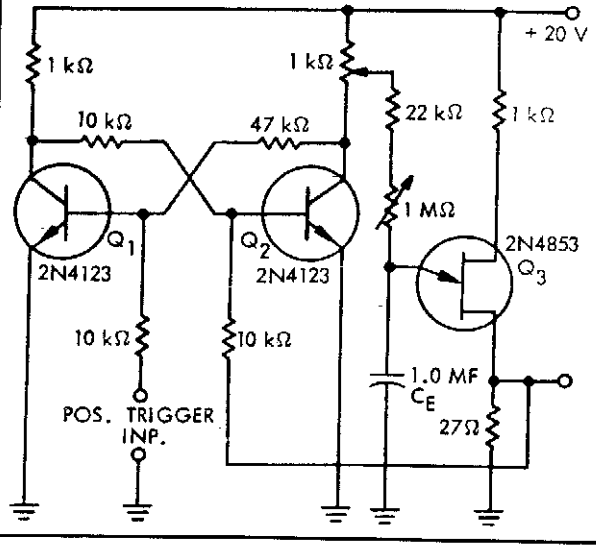

Fig. 40-12

MOTOROLA INC.

ASTABLE MULTIVIBRATOR

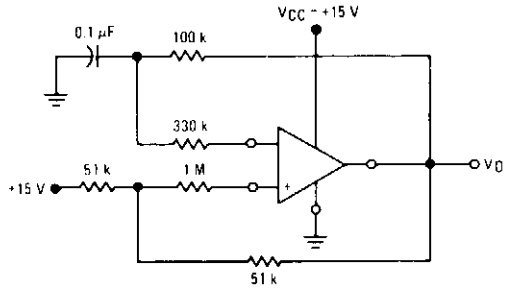

MOTOROLA INC.

Fig. 40-13

IC = MC3301

WAVEFORM GENERATOR

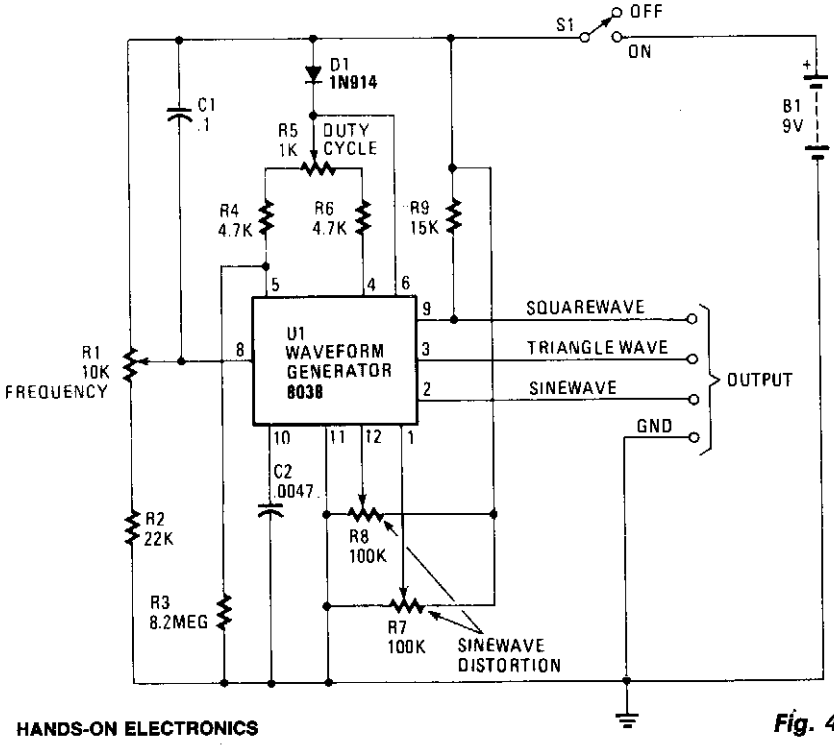

HANDS-ON ELECTRONICS

Fig. 40-14

Circuit Notes

The circuit is designed around the Intersil 8038CC. Frequency range is approximately 20 Hz to 20 kHz—a tuning range of 1000:1 with a single control. The output frequency depends on the value of C2 and on the setting of potentiometer R1. Other values of C2 change the frequency range. Increase the value of C2 to lower the frequency. The lowest possible frequency is around .001 Hz and the highest is around 300 kHz.

LINEAR RAMP GENERATOR

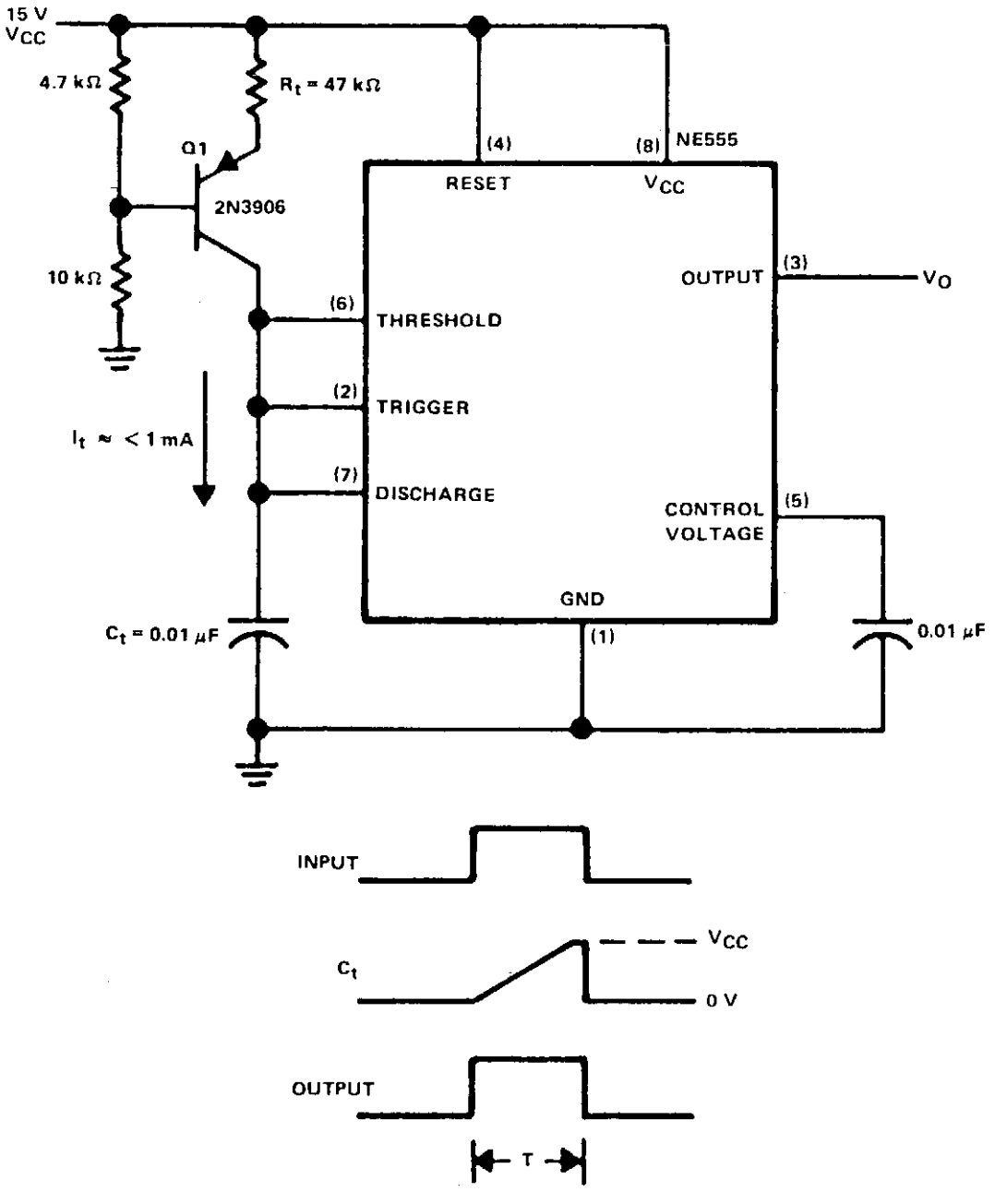

TEXAS INSTRUMENTS

Fig. 40-15

LINEAR RAMP GENERATOR, Continued.

Circuit Notes

The linear charging ramp is most useful where linear control of voltage is required. Some possible applications are a long period voltage controlled timer, a voltage to pulse width converter, or a linear pulse width modulator. Q1 is the current source transistor, supplying constant current to the timing capacitor C_t. When the timer is triggered, the clamp on C_t is removed and C_t charges linearly toward V_{CC} by virtue of the constant current supplied by Q1. The threshold at pin 6 is ⅔ V_{CC}; here, it is termed V_C. When the voltage across C_t reaches V_C volts, the timing cycle ends. The timing expression for output pulse with T is:

In general, I_t should be 1 mA value compatible with the NE555.

FUNCTION GENERATOR

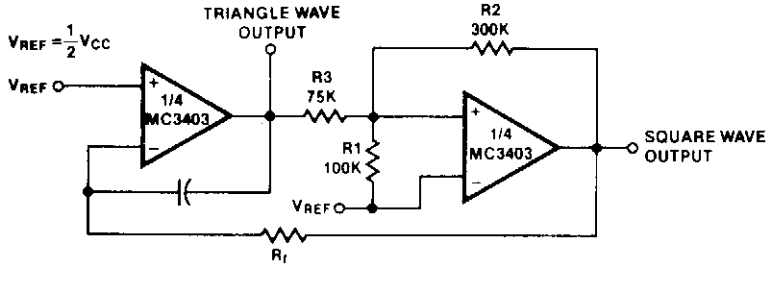

$$f = \frac{R1 + R_C}{4 C R_f R1} \quad \text{IF } R3 = \frac{R2\ R1}{R2 + R1}$$

SIGNETICS

Fig. 40-16

WAVEFORM GENERATOR

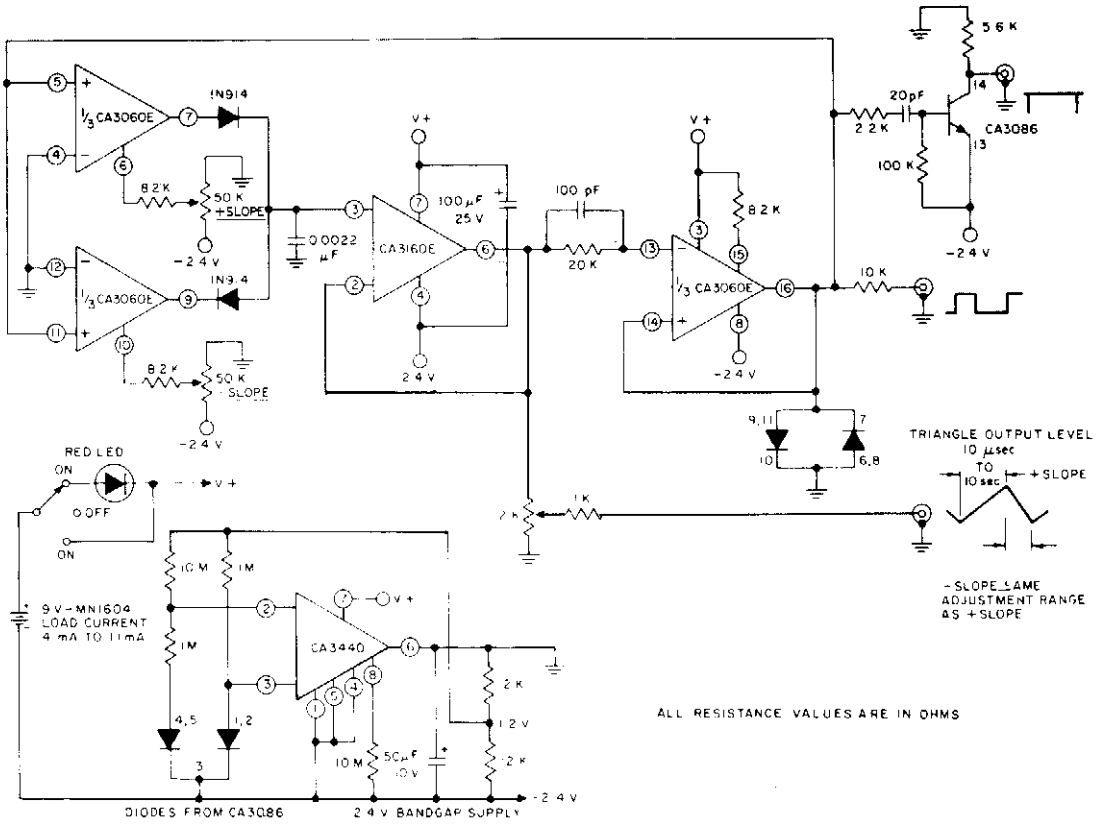

GENERAL ELECTRIC/RCA

Fig. 40-17

Circuit Notes

The circuit uses a CA3060 triple OTA (two units serve as switched current generators controlled by a third amplifier). A CA3160 BiMOS op amp serves as a voltage follower to buffer the 0.0022 μF integrating capacitor. The circuit has an adjustment range of 1,000,000:1 and a timing range of 20 μs to 20 sec. The "ON-OFF" switch actuates an LED that serves as both a pilot light and a low-battery indicator. The LED extends battery life, since it drops battery voltage to the circuit by approximately 1.2 volts, thus reducing supply current.

SINGLE SUPPLY FUNCTION GENERATOR

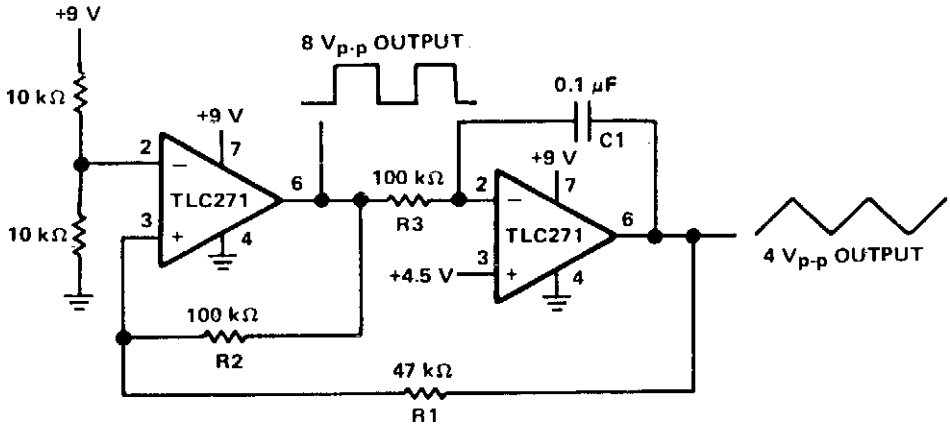

TEXAS INSTRUMENTS

Fig. 40-18

Circuit Notes

The circuit has both square-wave and triangle-wave output. The left section is similar in function to a comparator circuit that uses positive feedback for hysteresis. The inverting input is biased at one-half the V_{CC} voltage by resistors R4 and R5. The output is fed back to the non-inverting input of the first stage to control the frequency. The amplitude of the square wave is the output swing of the first stage, which is 8 V peak-to-peak. The second stage is basically an op amp integrator. The resistor R3 is the input element and capacitor C1 is the feedback element. The ratio R1/R2 sets the amplitude of the triangle wave, as referenced to the square-wave output. For both waveforms, the frequency of oscillation can be determined by the equation:

$$fo = \frac{1}{4R3C1} \quad \frac{R2}{R1}$$

The output frequency is approximately 50 Hz with the given components.

PRECISE WAVE GENERATOR

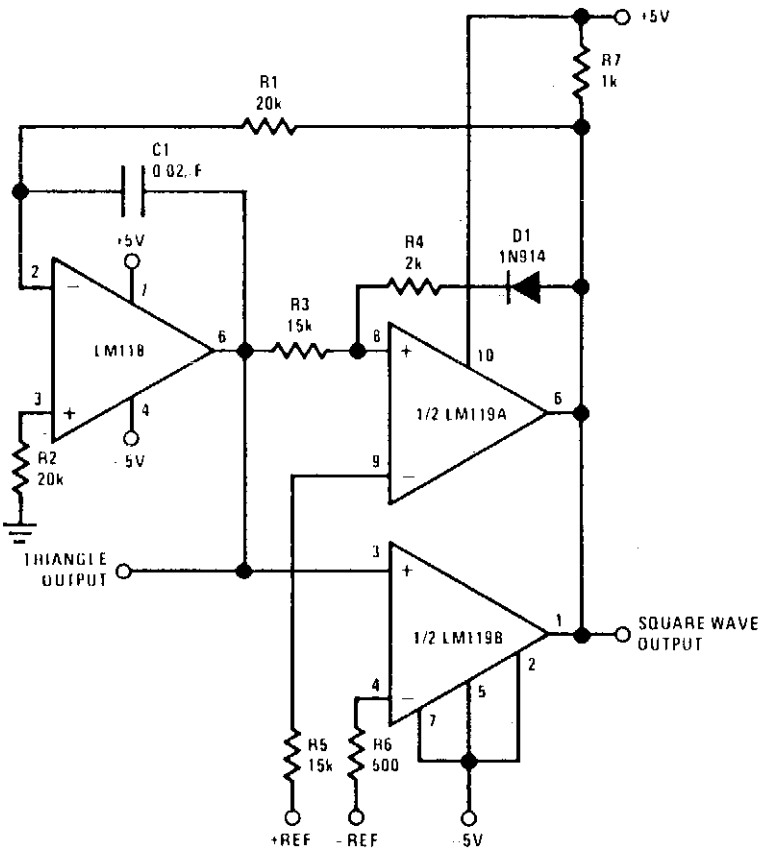

NATIONAL SEMICONDUCTOR

Fig. 40-19

Circuit Notes

The positive and negative peak amplitude is controllable to an accuracy of about ±0.01 V by a dc input. Also, the output frequency and symmetry are easily adjustable. The oscillator consists of an integrator and two comparators—one comparator sets the positive peak and the other the negative peak of the triangle wave. If R1 is replaced by a potentiometer, the frequency can be varied over at least a 10 to 1 range without affecting amplitude. Symmetry is also adjustable by connecting a 50 kΩ resistor from the inverting input of the LM118 to the arm of the 1 kΩ potentiometer. The ends of the potentiometer are connected across the supplies. Current for the resistor either adds or subtracts from the current through R1, changing the ramp time.

41
Games

The sources of the following circuits are contained in the Sources section beginning on page 694. The figure number contained in the box of each circuit correlates to the source entry in the Sources section.

Electronic Roulette
Lie Detector

ELECTRONIC ROULETTE

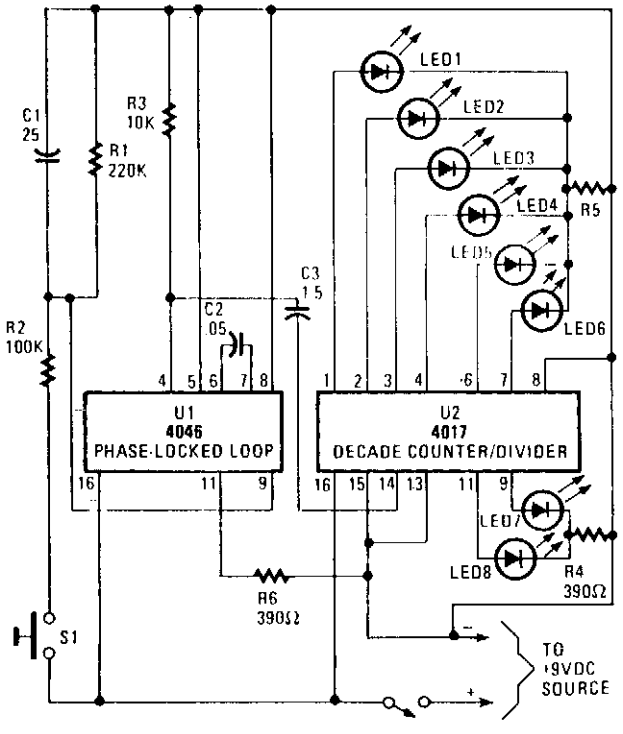

TAB BOOKS, INC.

Fig. 41-1

Circuit Notes

U1 (a 4046 PLL containing a voltage controlled oscillator or VCO, two phase comparators, a source follower, and a Zener diode) is used to produce a low-frequency, pulsed output of about 40 Hz. The VCO's frequency range is determined by R6 and C2, which can be altered by varying the voltage at pin 9. The rising voltage causes the frequency to rise from zero to threshold and remain at that frequency as long as S1 is closed. When S1 is opened, C1 discharges slowly through R1 to ground and the voltage falls toward zero. That produces a decreasing pulse rate. The output of U1 at pin 4 is connected to the clock input of U2 (a 4017 decade decoder/driver) at pin 14 via C3. U2 sequentially advances through each of its ten outputs (0 to 9)—pins 1 to 7, and 9 to 11—with each input pulse. As each output goes high, its associated LED is lighted, and extinguished when it returns to the low state. Only eight outputs are used in the circuit, giving two numbers to the spinner of the house. The circuit can be set up so that the LED's lights sequence or you can use some staggered combination; the LEDs grouped in a straight line or a circle.

LIE DETECTOR

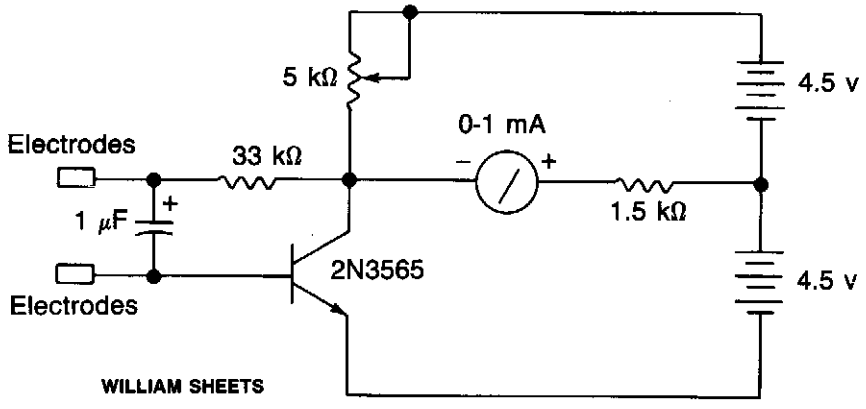

Fig. 41-2

Circuit Notes

The two probes shown are held in the hands and the skin resistance applies bias to the transistor. The 5 k ohm pot is set for zero deflection on the meter. When the "subject" is embarrassed or lies, sweating on the hands takes place, increasing the bias to the transistor and upsetting the bridge balance.

42
Gas and Smoke Detectors

The sources of the following circuits are contained in the Sources section beginning on page 694. The figure number contained in the box of each circuit correlates to the source entry in the Sources section.

Gas and Vapor Detector
Toxic Gas Detector
Gas Analyzer

GAS AND VAPOR DETECTOR

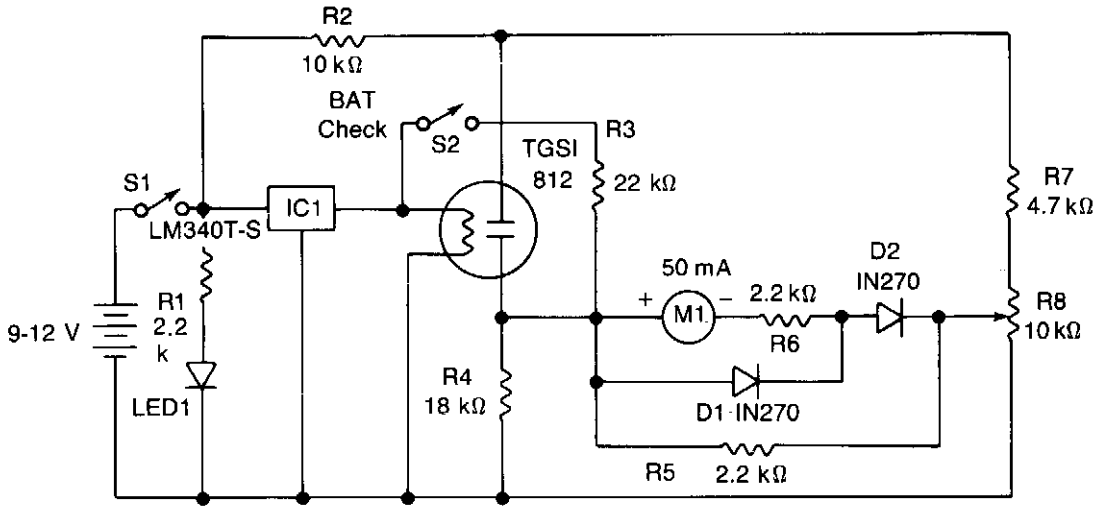

WILLIAM SHEETS

Fig. 42-1

Circuit Notes

The power drain is approximately 150 mA. IC1 provides a regulated 5-volt supply for the filament heater of the sensor. The gas sensitive element is connected as one arm of a resistance bridge consisting of R4, R7, R8 and the meter M1 with its associated resistors R5 and R6. The bridge can be balanced by adjusting R8 so that no current flows through the meter. A change in the sensor's resistance, caused by detection of noxious gases, will unbalance the circuit and deflect the meter. Diodes D1, D2 and resistor R5 protect the meter from overload while R6 determines overall sensitivity. R2 limits the current through the sensor; R1 and LED1 indicate that the circuit is working, so that you do not drain the battery leaving the unit on inadvertently; R3 and S2 give a battery level check.

TOXIC GAS DETECTOR

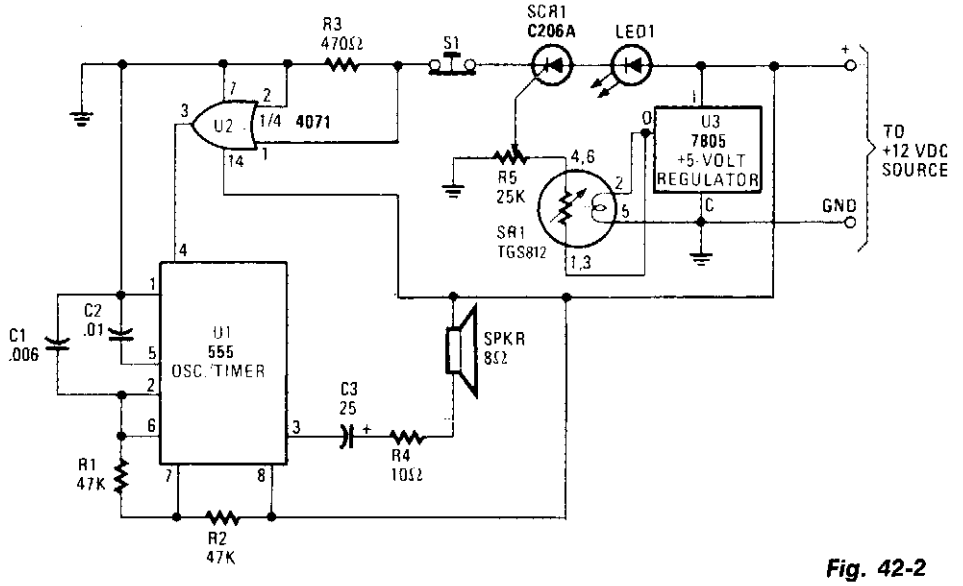

Fig. 42-2

Circuit Notes

The major device in the circuit is SR1 (a TGS812 toxic-gas sensor manufactured by Figaro Engineering Inc.) The gas-sensitive semiconductor (acting like a variable resistor in the presence of toxic gas) decreases in electrical resistance when gaseous toxins are absorbed from the sensor surface. A 25,000 ohm potentiometer (R5) connected to the sensor serves as a load, voltage-dividing network, and sensitivity control and has its center tap connected to the gate of SCR1. When toxic fumes come in contact with the sensor, decreasing its electrical resistance, current flows through the load (potentiometer R5). The voltage developed across the wiper of R5, which is connected to the gate of SCR1, triggers the SCR into conduction. With SCR1 now conducting, pin 1-volt supply for the semiconductor elements of the TGS812 in spite of the suggested 10 volts, thus reducing the standby current. A 7805 regulator is used to meet the 5-volt requirement for the heater and semiconductor elements.

GAS ANALYZER

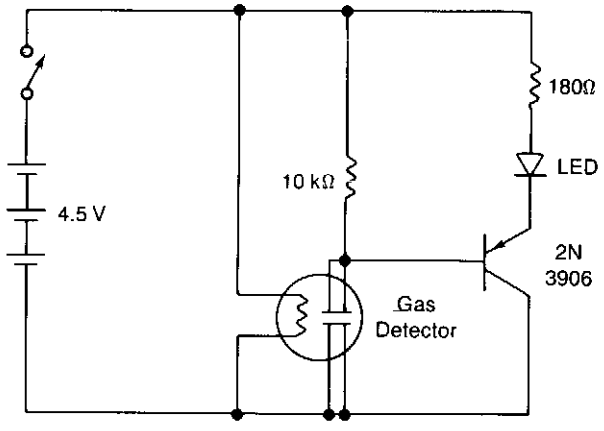

Fig. 42-3

WILLIAM SHEETS

Circuit Notes

The circuit shows a simple yes/no gas detector. Three 1.5-V D cells are used as a power supply, with S1 acting as an on/off switch. The heater is energized directly from the battery, while the electrodes are in series with a 10 k resistor. The voltage across this resistor is monitored by a pnp transistor. When the sensor is in clean air, the resistance between the electrodes is about 40 k, so that only about 0.9 V is dropped across the 10 k resistor. This is insufficient to turn on the transistor, because of the extra 1.6 V required to forward bias the light emitting diode (LED) in series with the emitter. When the sensor comes in contact with contaminated air, the resistance starts to fall, increasing the voltage dropped across the 10 k resistor. When the sensor resistance falls to about 10 k or less, the transistor starts to turn on, current passes through the LED, causing it to emit. The 180 ohm resistor limits the current through the LED to a safe value.

43
Hall Effect Circuits

The sources of the following circuits are contained in the Sources section beginning on page 694. The figure number contained in the box of each circuit correlates to the source entry in the Sources section.

Angle of Rotation Detector
Door Open Alarm

ANGLE OF ROTATION DETECTOR

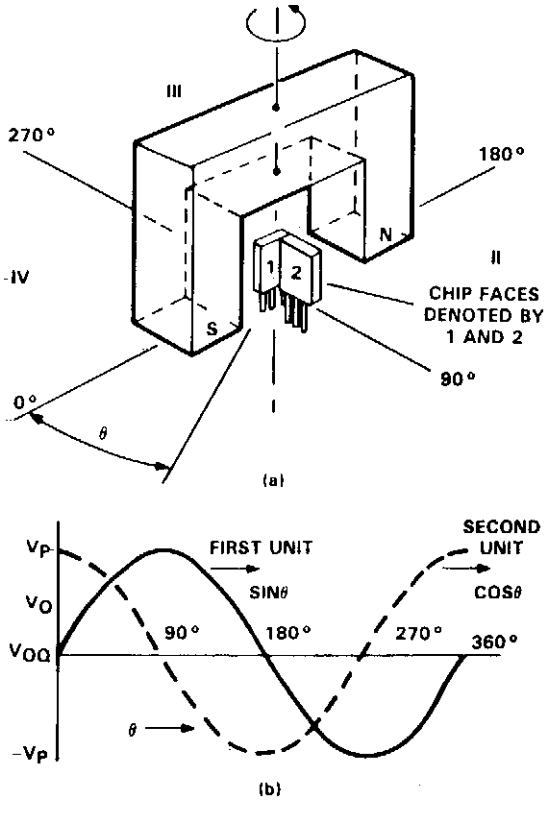

Fig. 43-1

TEXAS INSTRUMENTS

Circuit Notes

The figure shows two TL3103 linear Hall-effect devices used for detecting the angle of rotation. The TL3103s are centered in the gap of a U-shaped permanent magnet. The angle that the south pole makes with the chip face of unit #1 is defined as angle 0. Angle 0 is set to 0° when the chip face of unit #1 is perpendicular to the south pole of the magnet. As the south pole of the magnet sweeps through a 0° to 90° angle, the output of the sensor increases from 0°. Sensor unit #2 decreases from its peak value of +Vp at 0° to a value V_{OQ} at 90°. So, the output of sensor unit #1 is a sine function of 0 and the output of unit #2 is a cosine function of 0 as shown. Thus, the first sensor yields the angle of rotation and the second sensor indicates the quadrant location.

DOOR OPEN ALARM

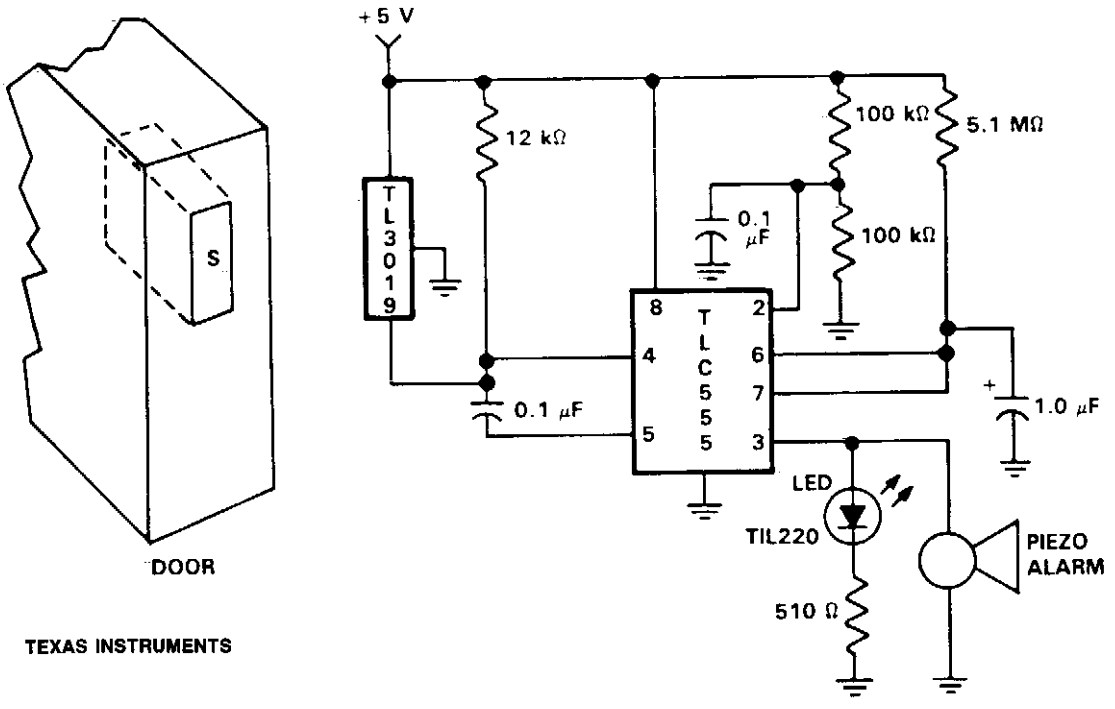

Fig. 43-2

Circuit Notes

Door open alarms are used chiefly in automotive, industrial, and appliance applications. This type of circuit can sense the opening of a refrigerator door. When the door opens, a triac could be activated to control the inside light. The figure shows a door position alarm. When the door is opened, an LED turns on and the piezo alarm sounds for approximately 5 seconds. This circuit uses a TL3019 Hall-effect device for the door sensor. This normally open switch is located in the door frame. The magnet is mounted in the door. When the door is in the closed position, the TL3019 output goes to logic low, and remains low until the door is opened. This design consists of a TLC555 monostable timer circuit. The 1 μF capacitor and 5.1 M ohm resistor on pins 6 and 7 set the monostable RC time constant. These values allow the LED and piezo alarm to remain on about 5 seconds when triggered. One unusual aspect of this circuit is the method of triggering. Usually a 555 timer circuit is triggered by taking the trigger, pin 2, low which produces a high at the output, pin 3. In this configuration with the door in the closed position, the TL3019 output is held low. The trigger, pin 2, is connected to ½ the supply voltage V_{CC}. When the door opens, a positive high pulse is applied to control pin 5 through a 0.1 μF capacitor and also to reset pin 4. This starts the timing cycle. Both the piezo alarm and the LED visual indicator are activated.

44
Humidity Sensors

The sources of the following circuits are contained in the Sources section beginning on page 694. The figure number contained in the box of each circuit correlates to the source entry in the Sources section.

Relative Humidity Sensor Signal Conditioner

RELATIVE HUMIDITY SENSOR SIGNAL CONDITIONER

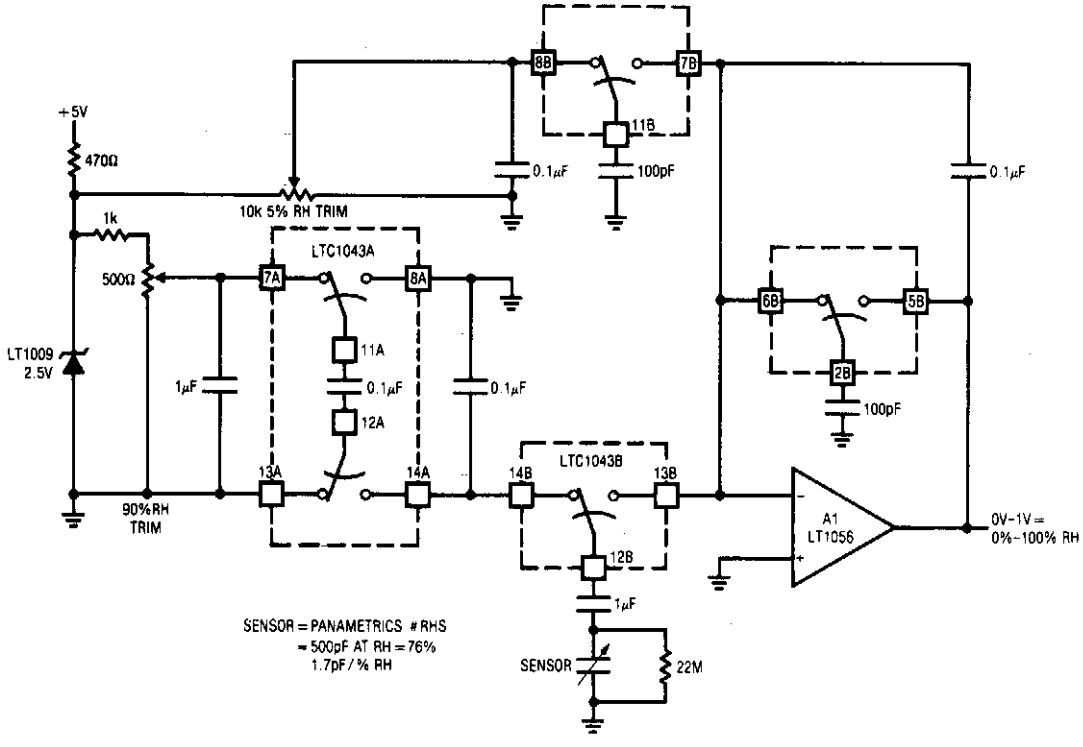

LINEAR TECHNOLOGY CORPORATION

Fig. 44-1

Circuit Notes

This circuit combines two LTC1043s with a based humidity transducer in a simple charge-pump based circuit. The sensor specified has a nominal 400 pF capacitance at RH = 76%, with a slope of 1.7 pF/% RH. The average voltage across this device must be zero. This provision prevents deleterious electrochemical migration in the sensor. The LTC1043A inverts a resistively scaled portion of the LT1009 reference, generating a negative potential at pin 14A. The LTC1043B alternately charges and discharges the humidity sensor via pins 12B, 13B, and 14B. With 14B and 12B connected, the sensor charges via the 1 μF unit to the negative potential at pin 14A. When the 14B-12B pair

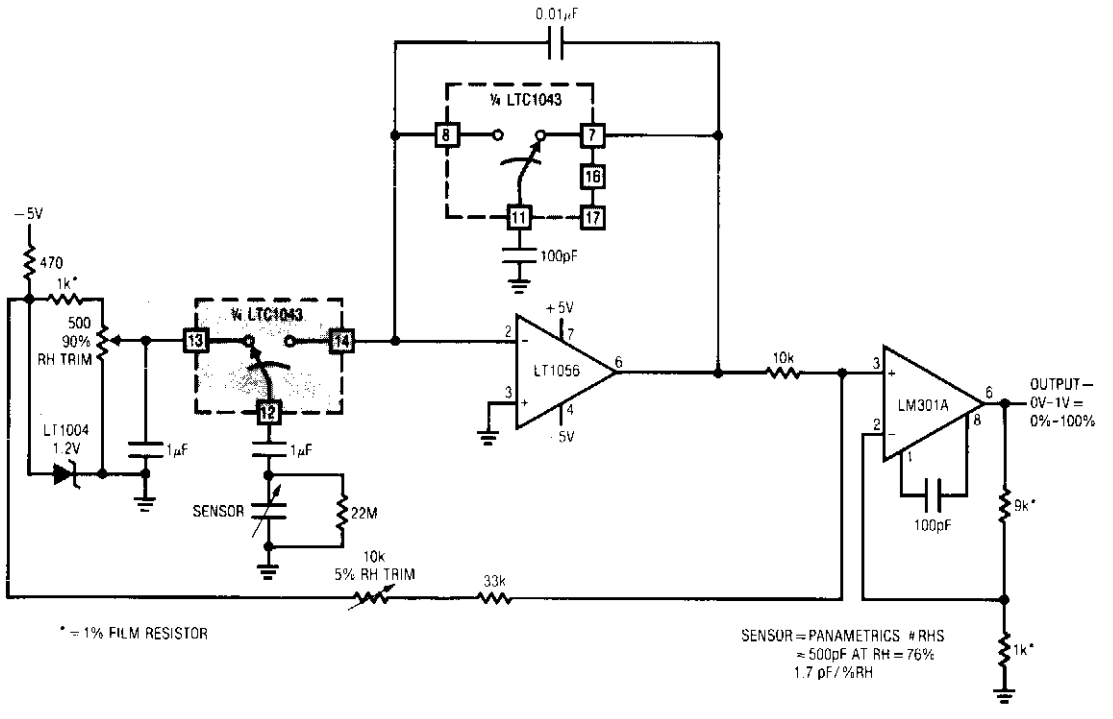

opens, 12B is connected to A1's summing point via 13B. The sensor now discharges into the summing point through the 1 μF capacitor. Since the charge voltage is fixed, the average current into the summing point is determined by the sensor's humidity related value. The 1 μF value ac couples the sensor to the charge-discharge path, maintaining the required zero average voltage across the device. The 22M resistor prevents accumulation of charge, which would stop current flow. The average current into A1's summing point is balanced by packets of charge delivered by the switched-capacitor gives A1 an integrator-like response, and its output is dc.

45
Infrared Circuits

The sources of the following circuits are contained in the Sources section beginning on page 694. The figure number contained in the box of each circuit correlates to the source entry in the Sources section.

Low Noise Infrared Detector
Infrared Transmitter
Infrared Transmitter
Invisible Infrared Pulsed Laser Rifle
Infrared Receiver
Pulsed Infrared Diode Emitter Drive

LOW NOISE INFRARED DETECTOR

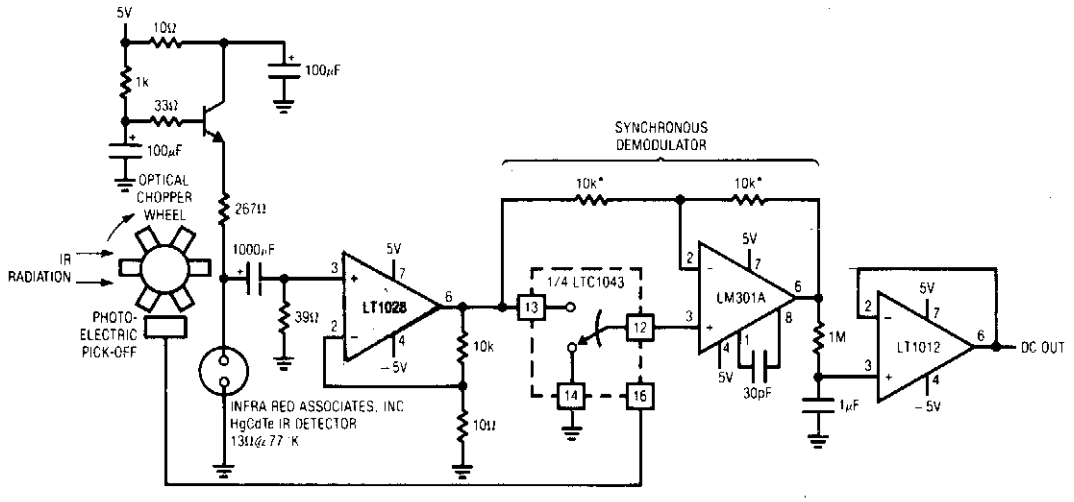

LINEAR TECHNOLOGY CORP.

Fig. 45-1

INFRARED TRANSMITTER

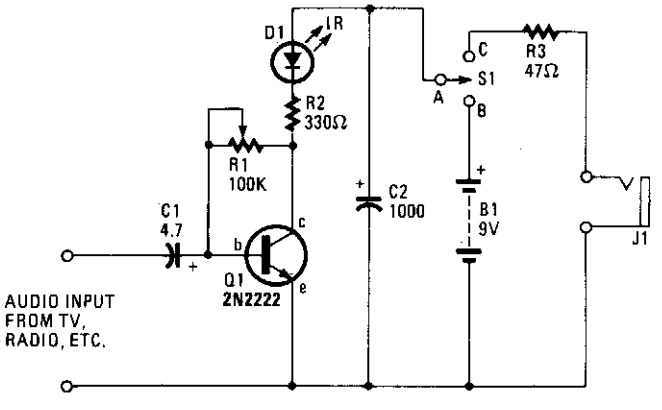

HANDS-ON ELECTRONICS

Fig. 45-2

Circuit Notes

The ultra-simple one-transistor, IR transmitter shown is designed to transmit the sound from any 8 or 16 ohm audio source, such as a TV, radio, or tape recorder on an infrared beam of light.

INFRARED TRANSMITTER

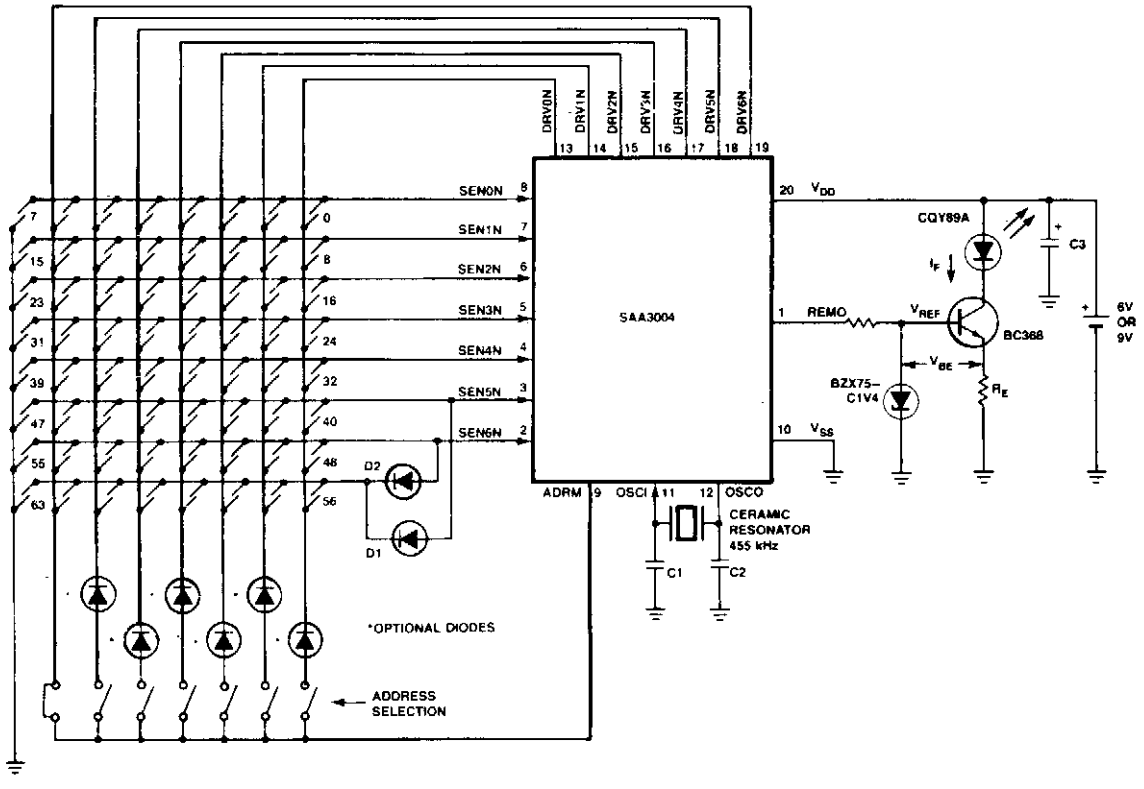

SIGNETICS

Fig. 45-3

Circuit Notes

The transmitter keyboard is arranged as a scanned matrix. The matrix consists of 7 driver outputs and 7 sense inputs. The driver outputs DRVON to DRV6N are open-drain n-channel transistors and they are conductive in the stand-by mode. The 7 sense inputs (SENON to SEN6N) enable the generation of 56 command codes. With 2 external diodes all 64 commands are addressable. The sense inputs have p-channel pull-up transistors, so that they are HIGH until they are pulled LOW by connecting them to an output via a key depression to initiate a code transmission.

INVISIBLE INFRARED PULSED LASER RIFLE

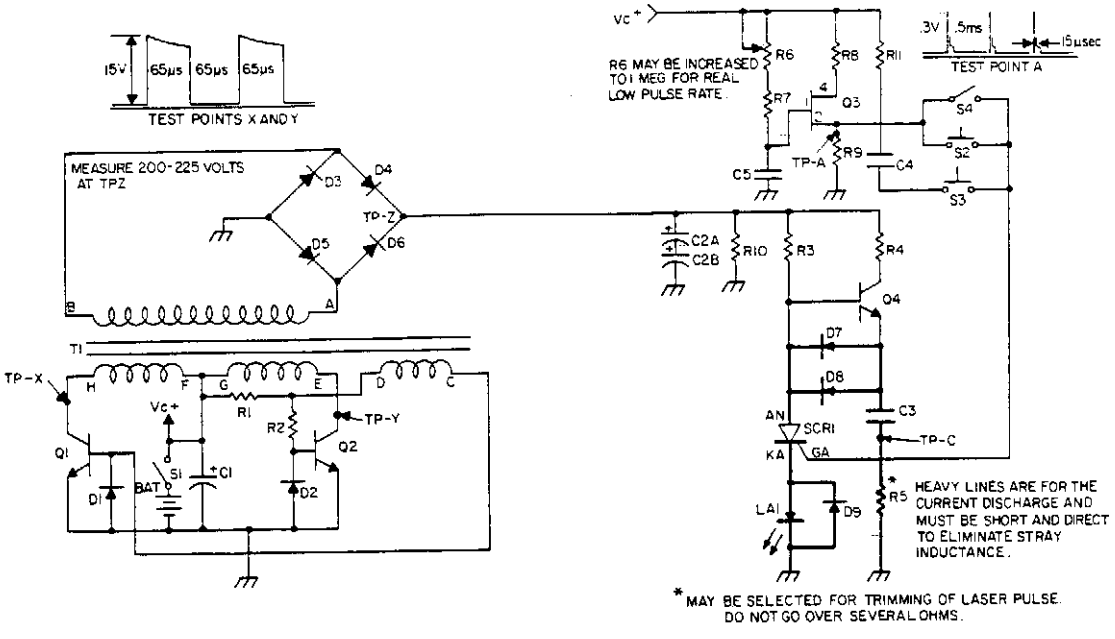

Fig. 45-4

TAB BOOKS INC.

Circuit Notes

The device generates an adjustable frequency of low to medium powered IR pulses of invisible energy and must be treated with care.

The portable battery pack is stepped up to 200 to 300 volts by the inverter circuit consisting of Q1, Q2, and T1. Q1 conducts until saturated, at which time, the base no longer can sustain it in an "on" state and Q1 turns "off," causing the magnetic field in its collector winding to collapse thus producing a voltage or proper phase in the base drive winding that turns on Q2 until saturated, repeating the above sequence of events in an "on/off" action. The diodes connected at the bases provide a return path for the base drive current. The stepped up squarewave voltage on the secondary of T1 is rectified and integrated on C2.

INFRARED RECEIVER

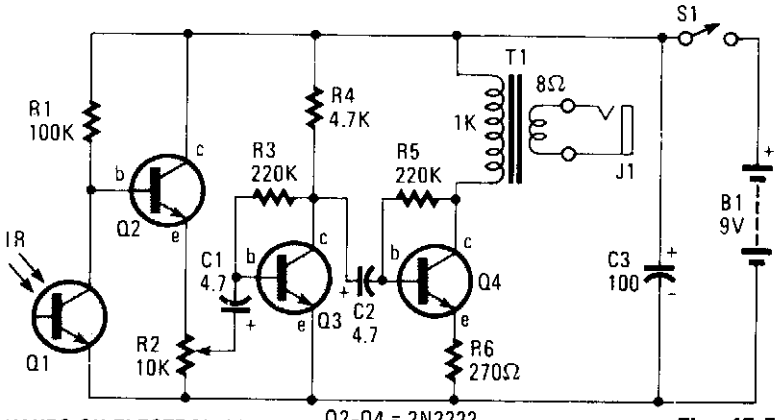

Fig. 45-5

Circuit Notes

The circuit consists of Q1—a phototransistor that responds to an intensity of amplitude-modulated IR light source—and a three-stage, high-gain audio amplifier. Transformer T1 is used to match the output impedance of the receiver to today's popular low-impedance (low-Z) headphones; but if a set of 1000-2000 ohm, magnetic (not crystal), high-impedance (high-Z) phones are to be used, remove T1 and connect the high-Z phones in place of T1's primary winding—the 1000-ohm winding.

PULSED INFRARED DIODE EMITTER DRIVE

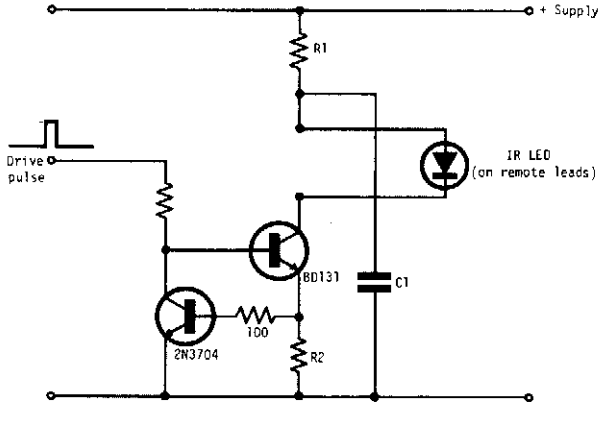

Fig. 45-6

Circuit Notes

Q1 and Q2 form a constant current drive defined by R2. (I approximates to the reciprocal of R2 in the circuit shown for values of I greater than 1 amp). The pulse current is drawn from C1 which is recharged during the time between pulses via R1. The value of C1 is determined from the duration and magnitude of the peak current required, and the time constant R1 C1 is determined from the duration between pulses.

46

Instrumentation Amplifiers

The sources of the following circuits are contained in the Sources section beginning on page 694. The figure number contained in the box of each circuit correlates to the source entry in the Sources section.

Instrument Preamp
Instrumentation Amplifier with ±100 Volt Common Mode Range
Current-Collector Head-Amplifier
Instrumentation Meter Driver
Saturated Standard Cell Amplifier

INSTRUMENT PREAMP

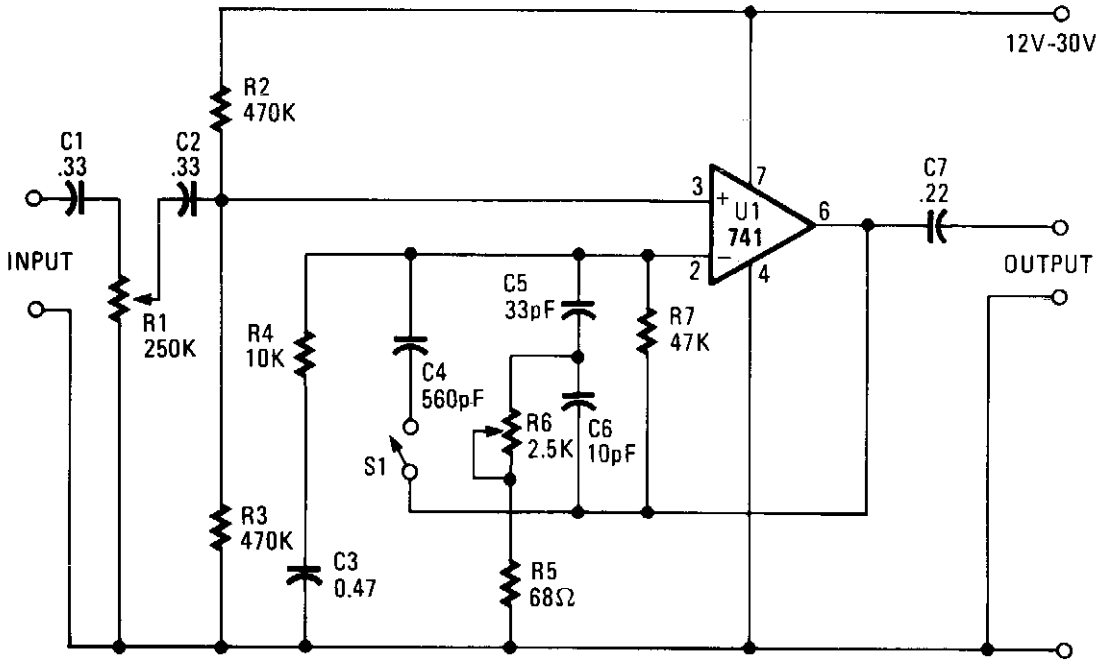

HANDS-ON ELECTRONICS

Fig. 46-1

Circuit Notes

The input impedance is the value of potentiometer R1. If your instrument has extra-deep bass, change capacitor C1 to 0.5 μF. What appears to be an extra part in the feedback loop is a brightening tone control. The basic feedback from the op amp's output (pin 6) to the inverting input (pin 2) consists of resistor R7, and the series connection of resistor R4 and capacitor C3, which produce a voltage gain of almost 5 (almost 14 dB). That should be more extra oomph than usually needed. If the circuit is somewhat short on bass response, increase the value of capacitor C3 to 1 to 10 μF. Start with 1 μF and increase the value until you get the bass effect you want.

INSTRUMENTATION AMPLIFIER WITH ±100 VOLT COMMON MODE RANGE

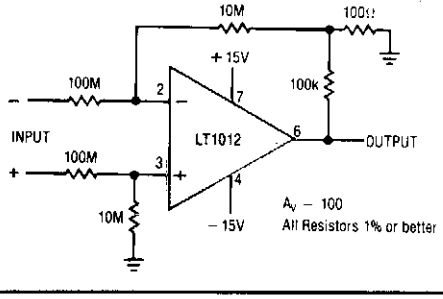

Fig. 46-2

LINEAR TECHNOLOGY CORP.

CURRENT-COLLECTOR HEAD-AMPLIFIER

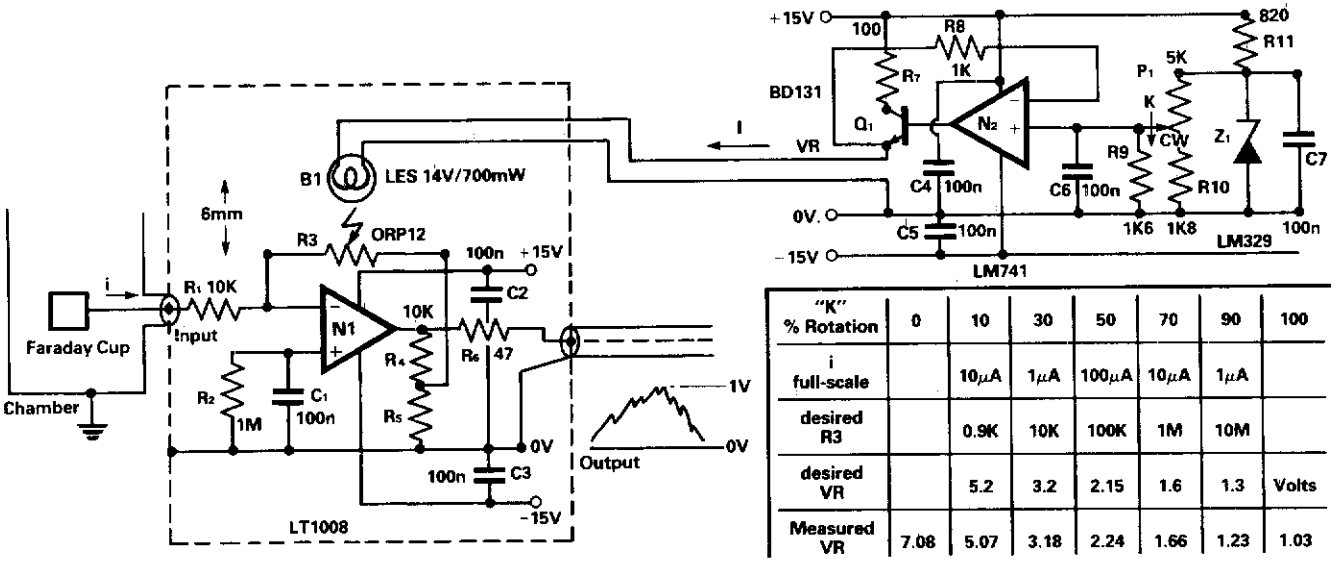

"K" % Rotation	0	10	30	50	70	90	100	
i full-scale		10μA	1μA	100μA	10μA	1μA		
desired R3		0.9K	10K	100K	1M	10M		
desired VR		5.2	3.2	2.15	1.6	1.3		Volts
Measured VR	7.08	5.07	3.18	2.24	1.66	1.23	1.03	

ELECTRONIC ENGINEERING

Fig. 46-3

Circuit Notes

To amplify small current signals such as from an electron-collector inside a vacuum chamber, it is convenient for reasons of noise and bandwidth to have a "head-amplifier" attached to the chamber. The op amp N1 is a precision bipolar device with extremely low bias current and offset voltage (1) as well as low noise, which allows the 100:1 feedback attenuator R4:R5. The resistance of R3 can be varied from above 10M to below 1R, and so the nominal 0 to 1 V-peak output signal corresponds to input current ranges of 1 nA to 10 μA; this current i enters via the protective resistor R1. Light from the bulb B1 shines on R3, and the filament current I is controlled by the op amp N2.

The reference voltage VR is "shaped" by the resistors R9R10 so as to tailor the bulb and LDR characteristics to the desired current ranges. Thus, rotation of the calibrated knob K gives the appropriate resistance to R3 for the peak-current scale shown.

INSTRUMENTATION METER DRIVER

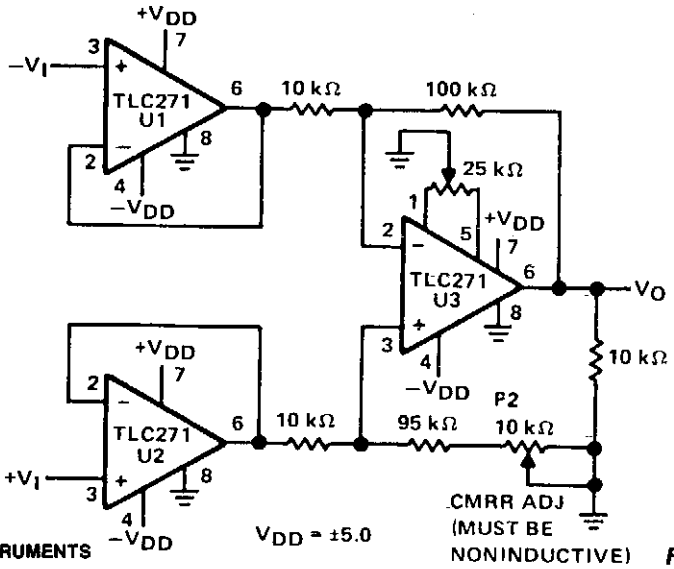

Fig. 46-4

Circuit Notes

Three op amps U1, U2, and U3 are connected in the basic instrumentation amplifier configuration. Operating from ± 5 V, pin 8 of each op amp is connected directly to ground and provides the ac performance desired in this application (high bias mode). P1 is for offset error correction and P2 allows adjustment of the input common mode rejection ratio. The high input impedance allows megohms without loading. The resulting circuit frequency response is 200 kHz at -3 dB and has a slew rate of 4.5 V/μs.

SATURATED STANDARD CELL AMPLIFIER

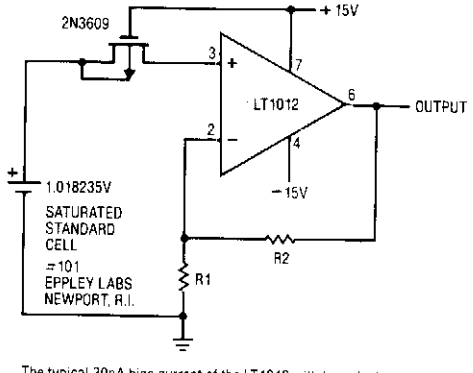

Fig. 46-5

The typical 30pA bias current of the LT1012 will degrade the standard cell by only 1 ppm/year. Noise is a fraction of a ppm. Unprotected gate MOSFET isolates standard cell on power down.

LINEAR TECHNOLOGY CORP.

47

Integrator Circuits

The sources of the following circuits are contained in the Sources section beginning on page 694. The figure number contained in the box of each circuit correlates to the source entry in the Sources section.

Improved Non-Inverting Integrator
Active Integrator with Inverting Buffer
Long Time Integrator

IMPROVED NON-INVERTING INTEGRATOR

Fig. 1

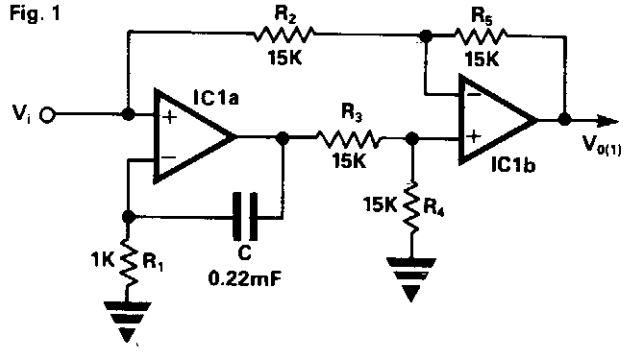

Fig. 2

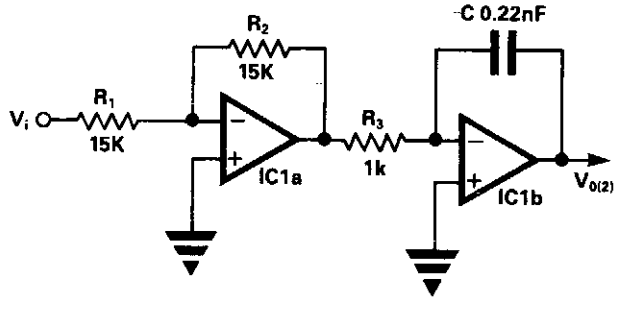

Fig. 3

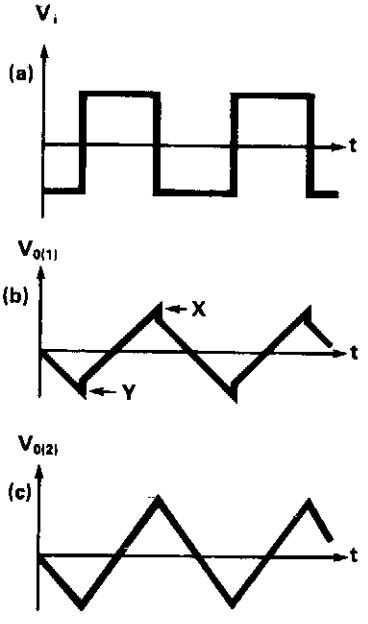

Fig. 47-1

Circuit Notes

In the circuit in Fig. 1, IC1a produces the integral term required but also has the side effect of producing a proportional term not required, so this term is subtracted by IC1b leaving a pure integral. If the ratio R2/R5 does not exactly match the ratio of R3/R4, the subtraction will not be complete and a small amount of the proportional term will reach the output. The result of this with a squarewave input is shown in Fig. 3a as small steps in the output waveform at points X and Y.

This effect can be completely removed by using the simplified circuit shown in Fig. 2. Here the signal is pre-inverted by IC1a, then fed to a standard inverting integrator IC1b. The result is a non-inverting integrator with the advantage that the unwanted proportional term is never produced, so it does not need to be subtracted.

ACTIVE INTEGRATOR WITH INVERTING BUFFER

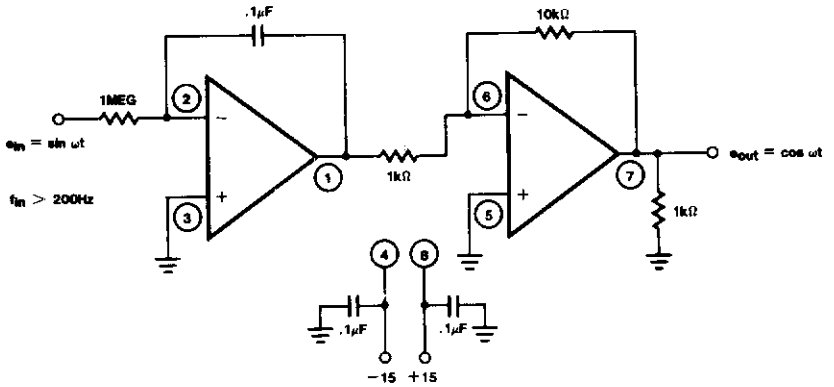

INTEGRATOR WAVEFORMS

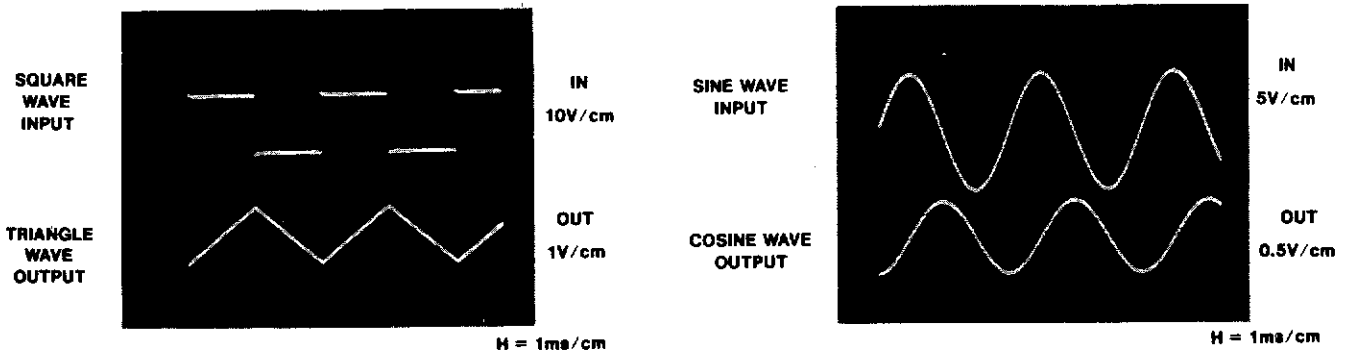

IC = NE/SE5512

SIGNETICS

Fig. 47-2

LONG TIME INTEGRATOR

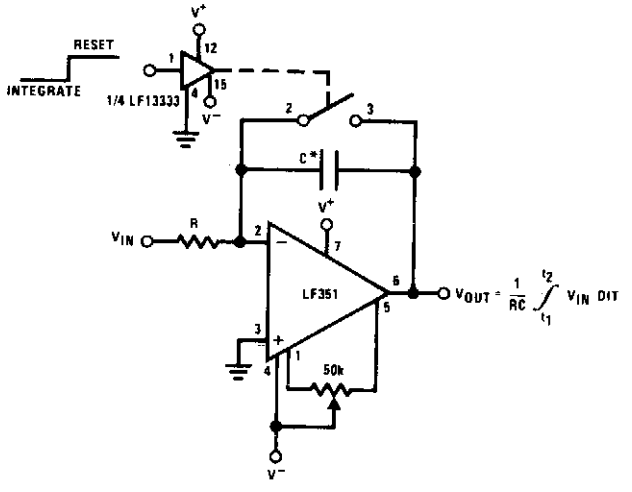

Fig. 47-3

* Low leakage capacitor
• 50k pot used for less sensitive V_{OS} adjust

NATIONAL SEMICONDUCTOR CORP.

48
Intercom Circuits

The sources of the following circuits are contained in the Sources section beginning on page 694. The figure number contained in the box of each circuit correlates to the source entry in the Sources section.

Intercom
Party-Line Intercom

INTERCOM

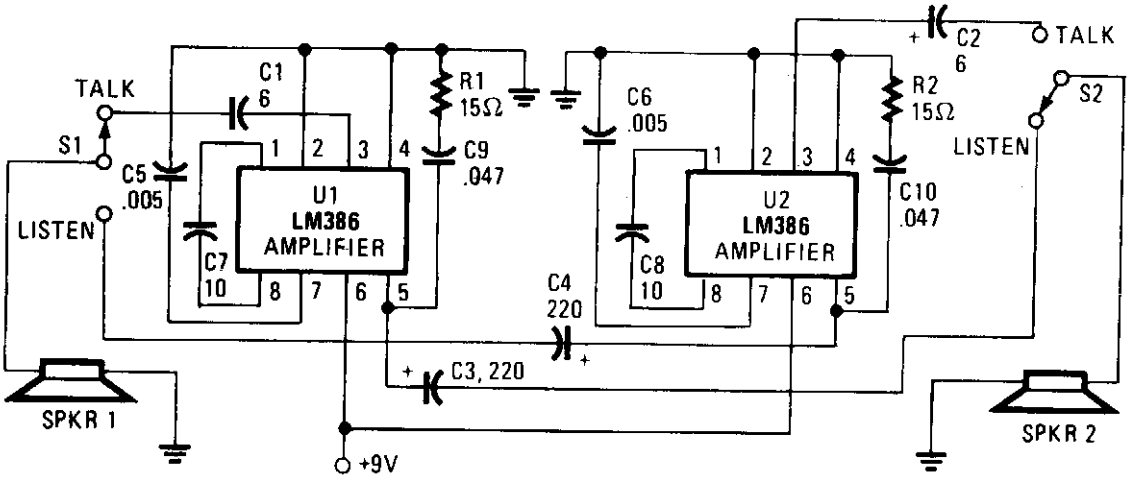

HANDS-ON ELECTRONICS

Fig. 48-1

Circuit Notes

The circuit consists of separate amplifiers—one for each station—rather than a single amplifier and a time sharing arrangement. U1 and U2 are low-voltage audio amplifiers, each of which operates as separate entities with switches at either station controlling which will transmit or receive. With capacitors C7 and C8 included in the circuit, the amplifiers have a gain of 200. Omitting those two components drops the gain to about 20. Other gain levels are available with the addition of a series-connected R/C combination connected between pin 1 and pin 8—for example, a 1000 ohm resistor and 10 μF capacitor for a gain of about 150.

PARTY-LINE INTERCOM

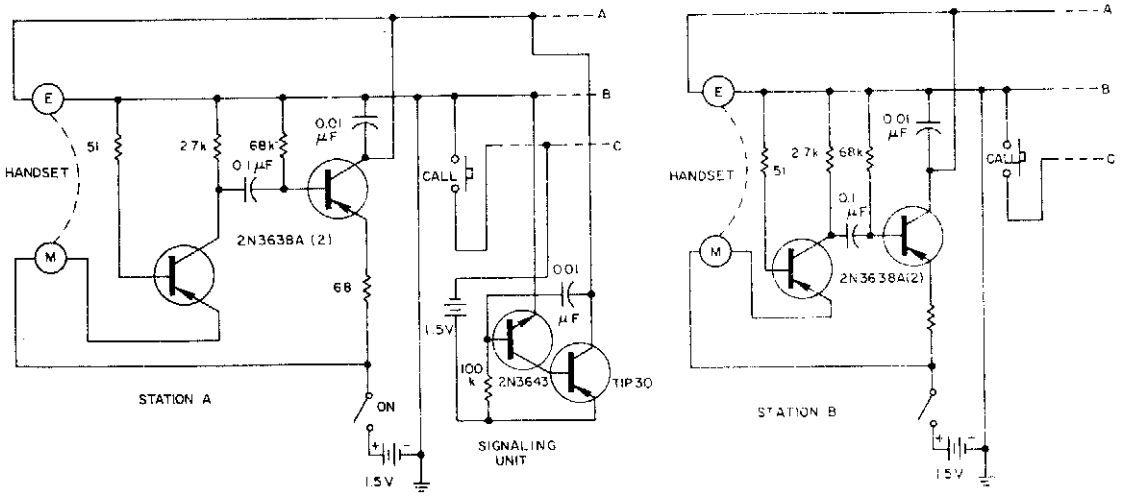

ELECTRONIC DESIGN

Fig. 48-2

Circuit Notes

A large number of intercom stations can be tied together. All units are connected in parallel, and the entire system is buzzed by only one signaling circuit. Each unit is powered individually from 1.5-V cells for redundancy. For greater signal volume, 3-V sources can be used for the supplies without changing any other parts of the system. The carbon microphone of a standard telephone handset at each station feeds into a common-base amplifier, and a tandem high-gain common-emitter stage drives the intercom line. All phone earpieces are in parallel across the line. The signaling circuit, also connected across the line, is a simple oscillator that drives all the earpieces.

49
Lamp-Control Circuits

The sources of the following circuits are contained in the Sources section beginning on page 694. The figure number contained in the box of each circuit correlates to the source entry in the Sources section.

Voltage Regulator for a Projection Lamp
Machine Vision Illumination Stabilizer
dc Lamp Dimmer
Automatic Light Controller for Carport
800 W Light-Dimmer
Lamp Dimmer
Rugged Lamp Driver is Short-Circuit Proof
TRIAC Lamp Dimmer
TRIAC Zero-Point Switch
Tandem Dimmer (Cross-Fader)

VOLTAGE REGULATOR FOR A PROJECTION LAMP

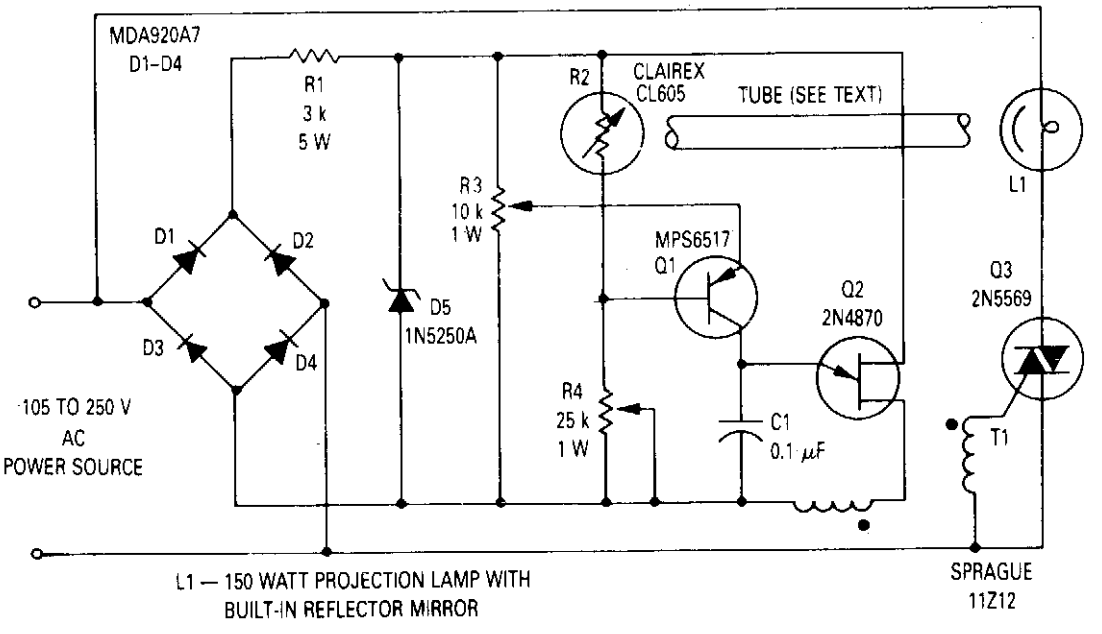

MOTOROLA

Fig. 49-1

Circuit Notes

The circuit will regulate the rms output voltage across the load (a projection lamp) to 100 volts ±2% for an input voltage between 105 and 250 volts ac. This is accomplished by indirectly sensing the light output of lamp L1 and applying this feedback signal to the firing circuit (Q1 and Q2) which controls the conduction angle of TRIAC Q3. The lamp voltage is provided by TRIAC Q3, whose conduction angle is set by the firing circuit for unijunction transistor Q2. The circuit is synchronized with the line through the full-wave bridge rectifier. The voltage to the firing circuit is limited by zener diode D5. Phase control of the supply voltage is set by the charging rate of capacitor C1. Q2 will fire when the voltage on C1 reaches approximately 0.65 times the zener voltage. The charging rate of C1 is set by the conduction of Q1, which is controlled by the resistance of photocell R2. Potentiometers R3 and R4 are used to set the lamp voltage to 100 volts when the line voltage is 105 volts and 250 volts, respectively.

MACHINE VISION ILLUMINATION STABILIZER

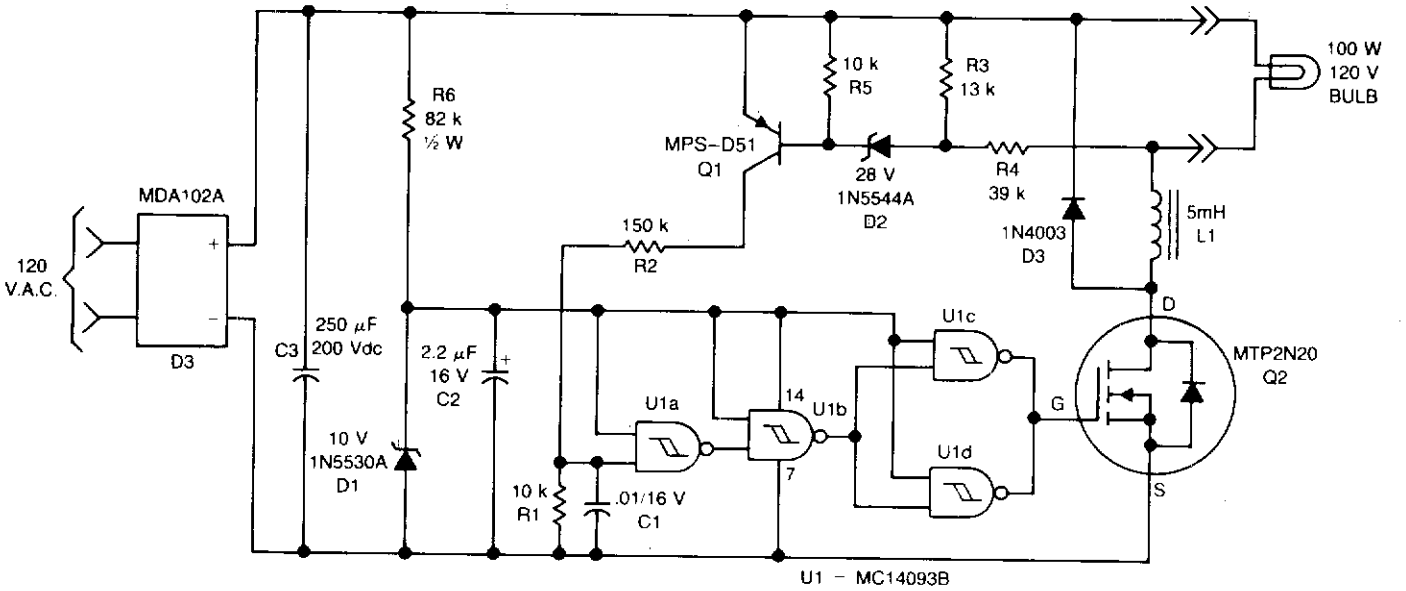

MOTOROLA

Fig. 49-2

Circuit Notes

The combination of Q1, Q2 and U1 form a hysteresis oscillator to stabilize lamp illumination. In operation, full wave bridge D3 operates directly from the ac line to supply unregulated dc to the lamp and also to the 10 V zener that provides power to the quad CMOS Schmitt trigger, U1. When the lamp supply exceeds 115 V, Q1 is turned ON, charging C1 through R2 to raise the input to U1a past the positive-going logic threshold. This drops the output voltage at U1c and U1d, which drives the gate of Q2, turning it OFF. Current then decays through the lamp, L1 and D3 until the lamp voltage falls below 115 V, at which time Q1 turns OFF and the cycle repeats.

DC LAMP DIMMER

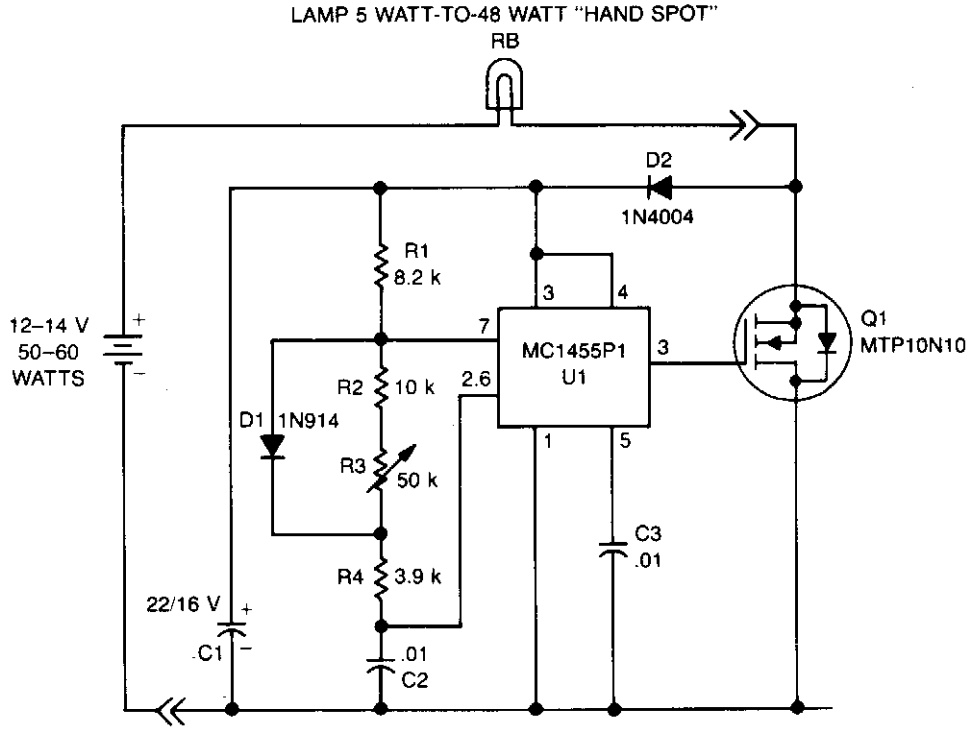

MOTOROLA

Fig. 49-3

Circuit Notes

A low power, low cost dc lamp dimmer for a two-wire portable "flashlight" can be realized with little or no heatsinking. In addition, a single potentiometer, R3 adjusts lamp brightness.

Battery power is stored in C1 for U1, which is a free-running multivibrator whose frequency is determined by R1, R2, R3, R4, and C2. U1 drives the gate of Q1, turning it and the lamp ON and OFF at a rate proportional to the multivibrator duty cycle.

AUTOMATIC LIGHT CONTROLLER FOR CARPORT

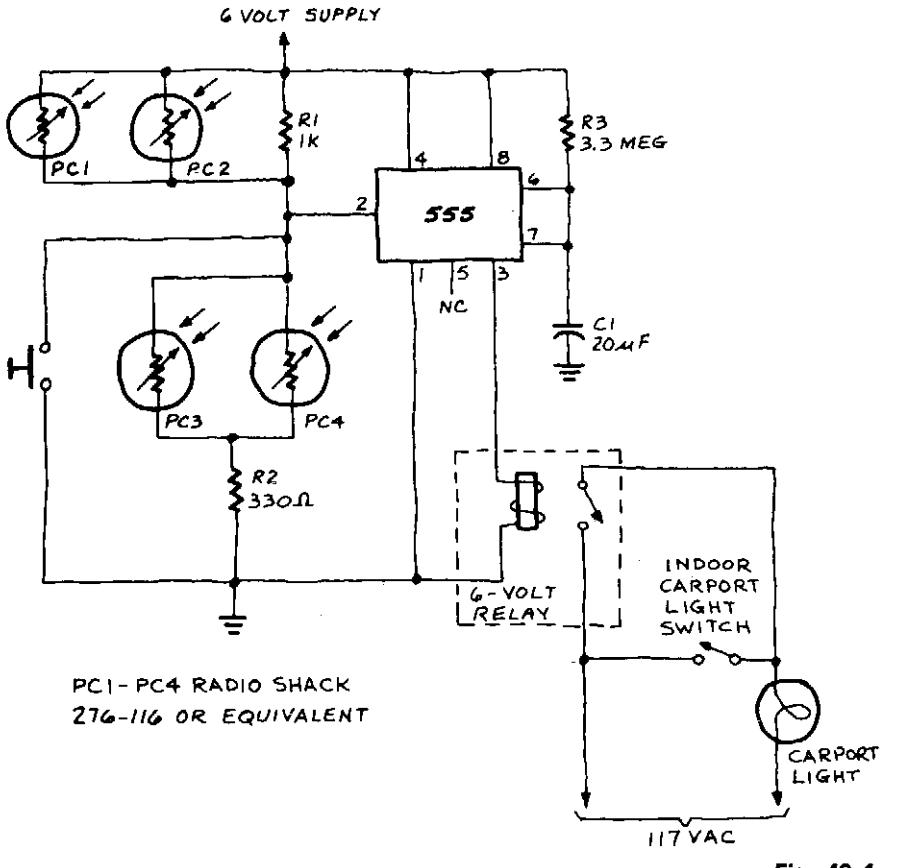

RADIO-ELECTRONICS

Fig. 49-4

Circuit Notes

A 555 timer IC, operating in the one-shot mode, is triggered by light striking photoresistors. These normally have a resistance of several megohms but, in the presence of light, that resistance drops to several hundred ohms, permitting current from the six-volt source to flow in the circuit. The R-C combination shown gives an on-time of about two minutes. Photoresistors PC3 and PC4 are mounted at headlight-height. When headlights illuminate the photoresistor, the timer starts. That actuates a relay, RY1, and the lights are turned on. The lights are automatically turned off when the timer's two minutes are up.

800 W LIGHT-DIMMER

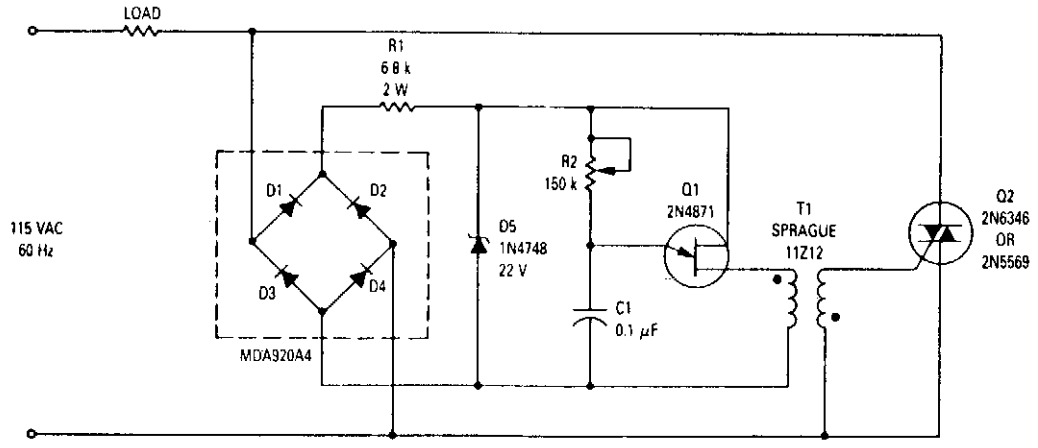

MOTOROLA

Fig. 49-5

Circuit Notes

This wide-range light dimmer circuit uses a unijunction transistor and a pulse transformer to provide phase control for the TRIAC. The circuit operates from a 115 volt, 60 Hz source and can control up to 800 watts of power to incandescent lights. The power to the lights is controlled by varying the conduction angle of the TRIAC from 0° to about 170°. The power available at 170° conduction is better than 97% of that at the full 180°.

LAMP DIMMER

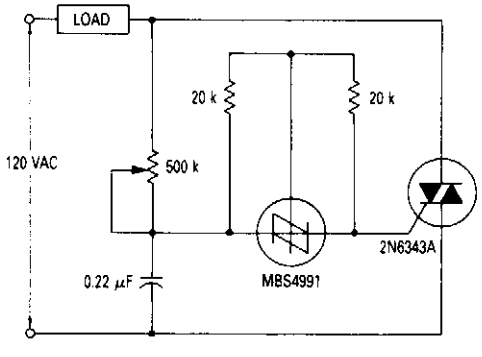

MOTOROLA

Fig. 49-6

Circuit Notes

A full range power controller suitable for lamp dimming and similar applications operate from a 120 volt, 60 Hz ac source, and can control up to 1000 watts of power to incandescent bulbs. The power to the bulbs is varied by controlling the conduction angle of TRIAC Q1. At the end of each positive half-cycle when the applied voltage drops below that of the capacitor, gate current flows out of the SBS and it switches on, discharging the capacitor to near zero volts. The RC network shown across the TRIAC represents a typical snubber circuit that is normally adequate to prevent line transients from accidentally firing the TRIAC.

RUGGED LAMP DRIVER IS SHORT-CIRCUIT PROOF

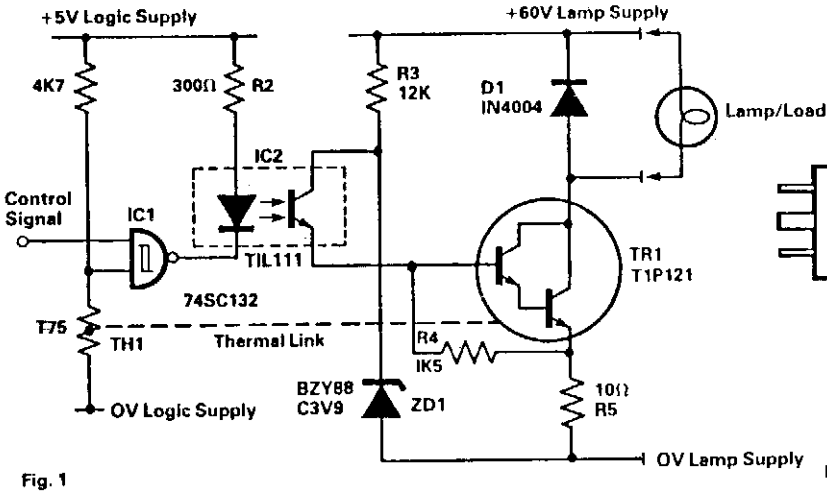

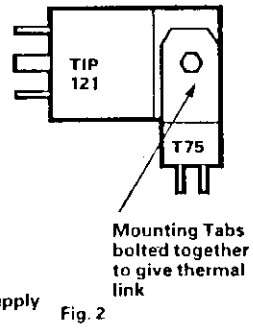

ELECTRONIC ENGINEERING

Fig. 49-7

Circuit Notes

This circuit is capable of driving filament lamps of nominal rating 200 mA at 60 V dc from a CMOS logic signal.

The lamp or load is connected in series with the Darlington transistor TR1 and emitter resistor R5. The Zener diode ZD1 establishes a soft reference voltage on the collector of the optical coupler IC2. When the logic control signal from the processor switches the optocoupler on via IC1, base drive is applied to TR1 and the lamp is switched on.

TRIAC LAMP DIMMER

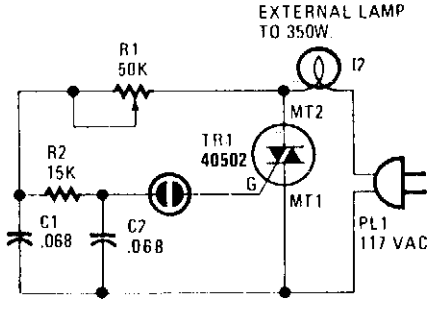

TAB BOOKS, INC.

Fig. 49-8

Circuit Notes

Using a heatsink, the TRIAC (TR1) can handle up to 350 watts. The neon lamp, I1, won't trip the gate until after it conducts and using R1, set the lighting wherever you want it.

TRIAC ZERO-POINT SWITCH

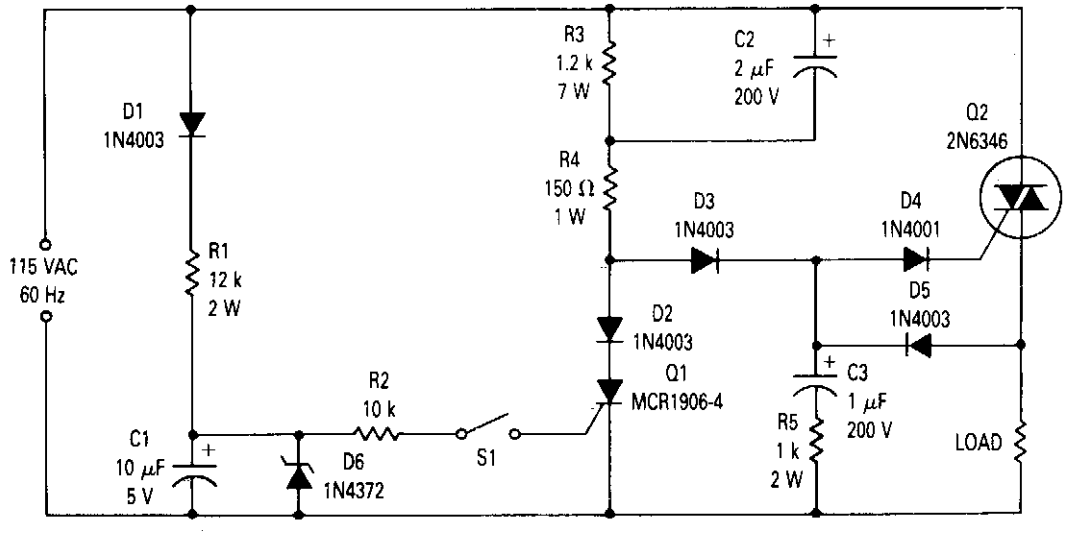

MOTOROLA

Fig. 49-9

Circuit Notes

On the initial part of the positive half cycle, the voltage is changing rapidly from zero causing a large current to flow into capacitor C2. The current through C2 flows through R4, D3, and D4 into the gate of the TRIAC Q2 causing it to turn on very close to zero voltage. Once Q2 turns on, capacitor C3 charges to the peak of the line voltage through D5. When the line voltage passes through the peak, D5 becomes reverse-biased and C3 begins to discharge through D4 and the gate of Q2. At this time the voltage on C3 lags the line voltage. When the line voltage goes through zero there is still some charge on C3 so that when the line voltage starts negative C3 is still discharging into the gate of Q2. Thus Q2 is also turned on near zero on the negative half cycle. This operation continues for each cycle until switch S1 is closed, at which time SCR Q1 is turned on. Q1 shunts the gate current away from Q2 during each positive half cycle keeping Q2 from turning on. Q2 cannot turn on during the negative cycle because C3 cannot charge unless Q2 is on during the positive half cycle.

TANDEM DIMMER (CROSS-FADER)

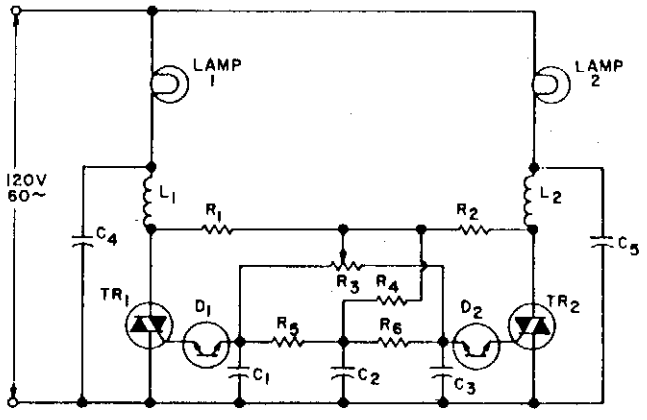

R_1 = R_2 = 6800Ω, 1 WATT
R_3 = 150K Ω LINEAR POT. 1W
R_5 = R_6 = 22KΩ, 1/2W.
R_4 = 15KΩ, 1/2W.
TR_1 = TR_2 = TRIAC
D_1 = D_2 = GE ST-2 DIAC

L_1 = L_2 = 60μhy (FERRITE CORE)
C_1 = C_2 = C_3 = 0.1μf 50V
C_4 = C_5 = 0.1μf 200 VOLTS

NOTE: TOTAL LIGHT LEVEL (SUM OF LAMPS 1+2) CONSTANT WITHIN 15%.

GENERAL ELECTRIC

Fig. 49-10

Circuit Notes

This cross fader circuit can be used for fading between two slide projectors. As R_3 is moved to either side of center, one triac is fired earlier in each half cycle, and the other later. The total light output of both lamps stays about the same for any control position.

50

Laser Circuits

The sources of the following circuits are contained in the Sources section beginning on page 694. The figure number contained in the box of each circuit correlates to the source entry in the Sources section.

Laser Light Detector
Stabilizing a Laser Discharge Current

LASER LIGHT DETECTOR

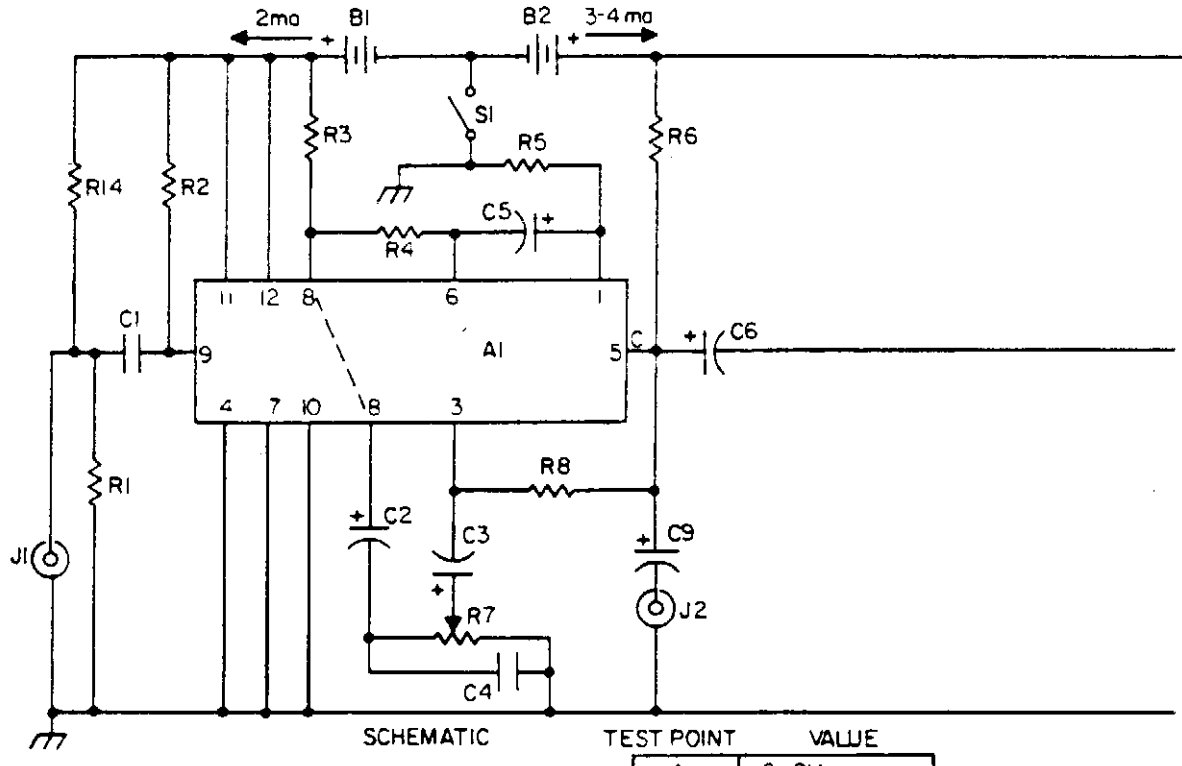

TEST POINT	VALUE
A	6-8V
B	4-5V
C	3-4V
D	0(.3)V
E	9(4.5)V
F	0(3)V
G	0(1)V
H	9(.2)V

VALUE IN PARENTHESIS ARE IN THE "ACTUATED" STATE AND ARE WITH A REALISTIC #CTR-43 RECORDER.

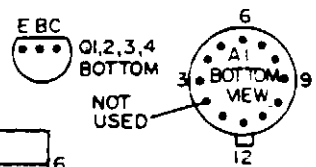

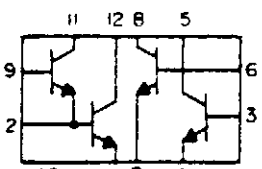

A1 CA3018 SCHEMATIC

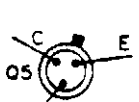

TAB BOOKS INC.

Fig. 50-1

Circuit Notes

The laser light detector utilizes a sensitive photo transistor (Q5) placed at the focal point of a lens (LE2). The output of Q5 is fed to a sensitive amplifier consisting of array (A1) and is biased via the voltage divider consisting of R14 and R1. The base is not used. Q5 is capacitively coupled to a Darlington pair for impedance transforming and is further fed to a capacitively coupled cascaded pair of common-emitter amplifiers for further signal

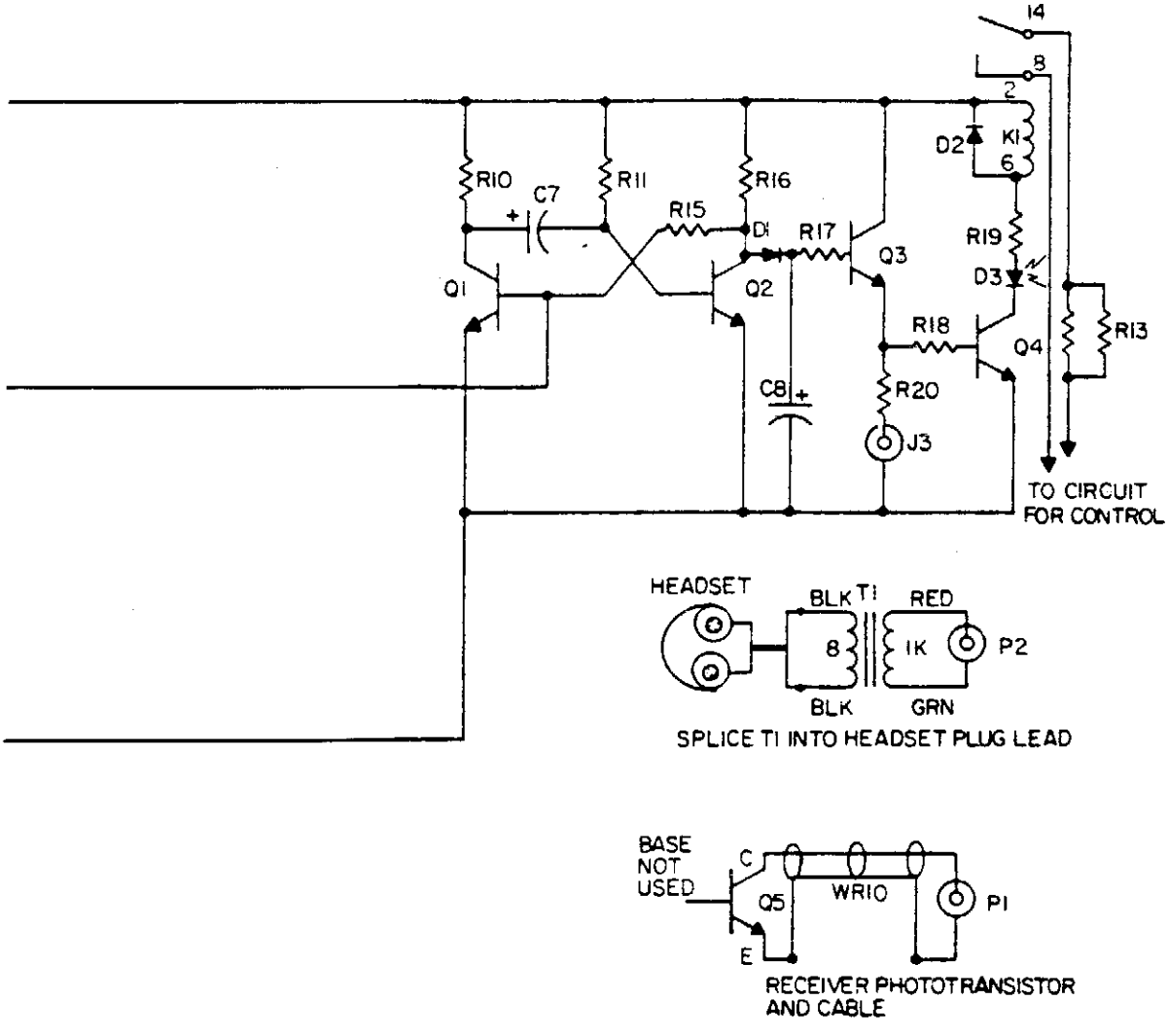

amplification. Sensitivity control (R7) controls base drive to the final transistor of the array and hence controls overall system sensitivity. Output of the amplifier array is capacitively coupled to a one-shot consisting of Q1 and Q2 in turn integrating the output pulses of Q2 onto capacitor C8 through D1. This dc level now drives relay drivers Q3 and Q4 activating K1 along with energizing indicator D3, consequently controlling the desired external circuitry. The contacts of K1 are in series with low ohm resistor R13 to prevent failure when switching capacitive loads. J2 allows "listening" to the intercepted light beam via headsets. This is especially useful when working with pulsed light sources such as GaAs lasers or any other varying periodic light source.

STABILIZING A LASER DISCHARGE CURRENT

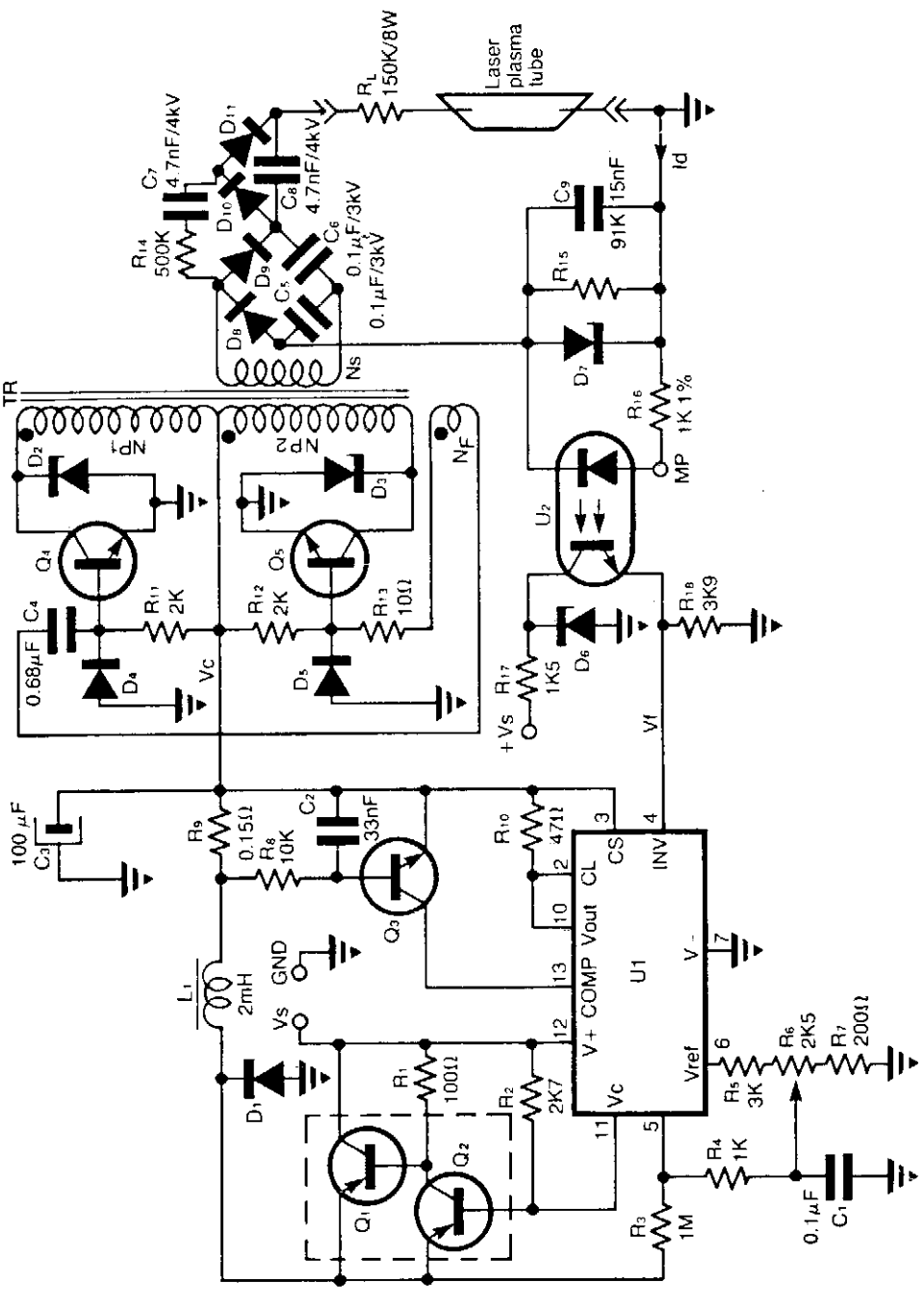

Fig. 50-2

						D_1	BA159
						D_2; D_3	PL33Z
				Q_1	KD167	D_4; D_5	1N4148
		$N_{p1}=N_{p2}$	8 turns	Q_2	BD140	D_6	PL7V5
U_1	LM723	Ns	1100 turns	Q_3	BC173C	D_7	PL47Z
U_2	MB101	Nf	5 turns	Q_4; Q_5	2N5496	D_8...D_{11}	LA40

Circuit Notes

The circuit uses a free-running push-pull dc to dc high voltage converter to get the necessary voltage for the laser plasma tube supply. The supply voltage V_C of this converter, is adjusted by a switch-mode power supply in order to keep the load current constant, at set value. The linear opto-electronic isolator U2, connected in series with the laser plasma tube, gives a voltage V_F proportional to the discharge current I_D across R18, having the correct polarity to drive directly the inverting input of U1, D7, R15 protects the optoisolator diode against damage produced by the high voltage ignition pulse.

Due to the high operating frequency of the high voltage converter (25 kHz) the ripple of the laser output power is less than 2.10^{-4}. The stability of I_D is better than 10^{-2}, for variations of supply voltage V_s is the range of $\pm 10\%$, and depends on the optoisolator sensitivity.

51

Light-Controlled Circuits

The sources of the following circuits are contained in the Sources section beginning on page 694. The figure number contained in the box of each circuit correlates to the source entry in the Sources section.

Photo Alarm
Warning Light Operates from Battery Power Supply
Light Operated Switch
Photoelectric Switch
Back-Biased GaAsP LED Operates as Light Sensor
Twilight-Triggered Circuit
Automatic Mooring Light
Electronic Wake-Up Call
Photodiode Sensor Amplifier
Light Seeking Robot
Synchronous Photoelectric Switch
Photocurrent Integrator
Robot Eyes
Modulated Light-Beam Circuit Cancels Ambient Light Effects
Monostable Photocell Circuit has Self-Adjusting Trigger Level
Thermally Stabilized PIN Photodiode Signal Conditioner

PHOTO ALARM

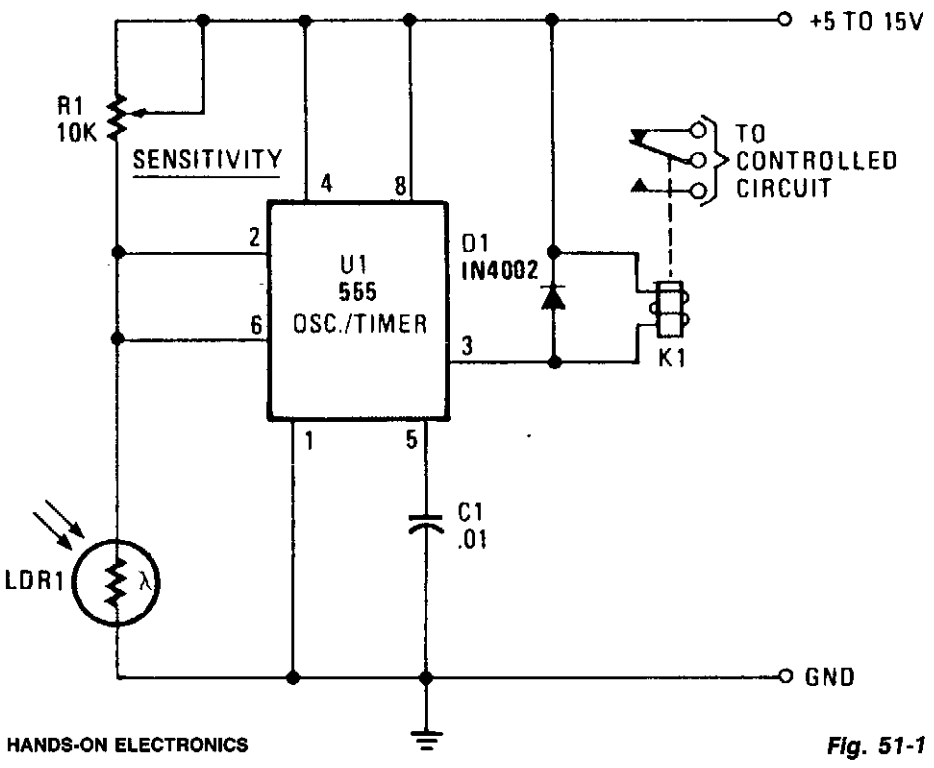

HANDS-ON ELECTRONICS

Fig. 51-1

Circuit Notes

LDR1, a cadmium sulphide (CDS) photoresistive cell is used as the lower leg of a voltage divider between V_{CC} and ground. The timer terminals 2 and 6 are connected to the junction of the photocell and SENSITIVITY control R1. The resistance of the photoresistive cell varies inversely as the light intensity; resistance is high when the illumination level is low; low in bright light. (The Radio Shack CDS cell 276-116 has a typically wide resistance range—about 3 megohms in darkness and 100 ohms in bright light.) When the light is interrupted or falls below a level set by SENSITIVITY control R1, the rise in LDR1's resistance causes the voltage on pins 2 and 6 to rise. If the control is set so the voltage rises above ⅔ V_{CC}, the relay pulls in. The relay drops out when the light level increases and the drop across the photocell falls below ⅓ V_{CC}. (The circuit can be modified by placing relay K1 and diode D1 between pin 3 and ground. In this case, the relay drops out when the voltage on pins 2 and 6 rises above ⅔ V_{CC}, and pulls in when it falls below ⅓ V_{CC}. This modification is valuable when the relay has single-throw contacts.) Opening and closing of the relay contacts occurs at different illumination levels. This ⅓ V_{CC} hysteresis is an advantage that prevents the circuit from hunting and the relay from chattering when there are very small changes in illumination.

WARNING LIGHT OPERATES FROM BATTERY POWER SUPPLY

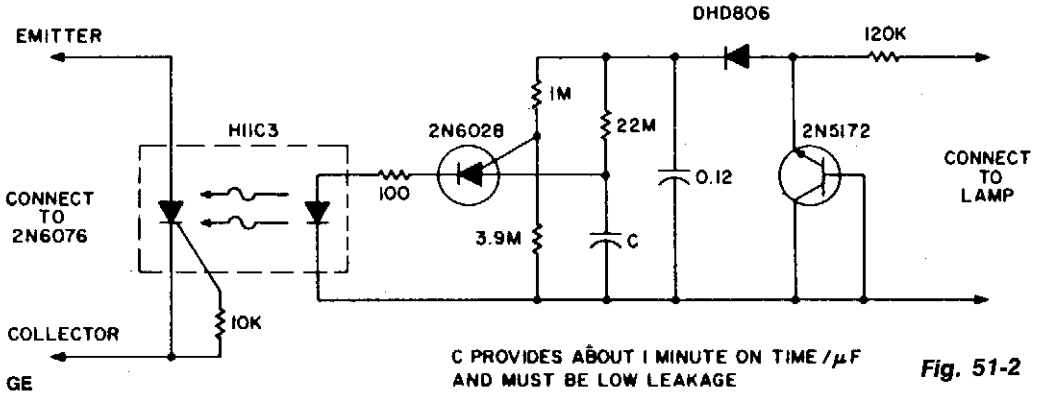

Fig. 51-2

Circuit Notes

The circuit provides illumination when darkness comes. By using the gain available in darlington transistors, this circuit is simplified to use just a photodarlington sensor, a darlington amplifier, and three resistors. The illumination level will be slightly lower than normal, and longer bulb life can be expected, since the D40K saturation voltage lowers the lamp operating voltage slightly.

LIGHT-OPERATED SWITCH

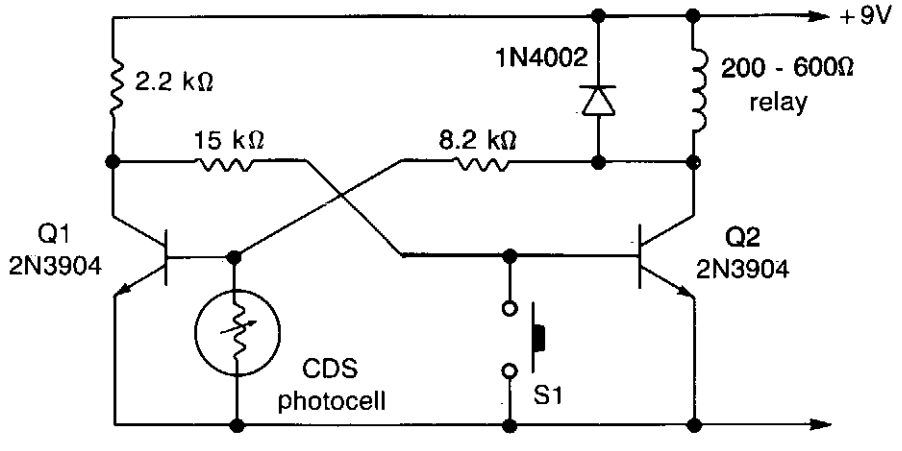

WILLIAM SHEETS

Fig. 51-3

Circuit Notes

This circuit uses a flip-flop arrangement of Q1 and Q2. Normally Q1 is conducting heavily. Light on CDS photocell causes Q1 bias to decrease, cutting it off, turning on Q2, removing the remaining bias from Q1. Reset is accomplished by depressing S1.

PHOTOELECTRIC SWITCH

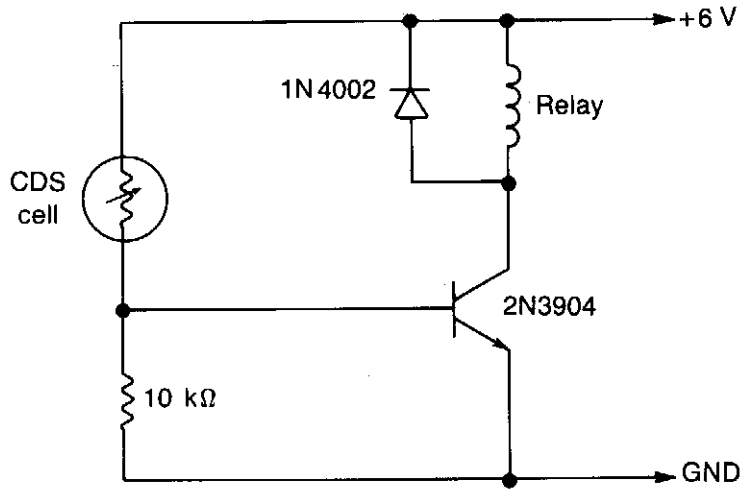

WILLIAM SHEETS

Fig. 51-4

Circuit Notes

The CDS cell resistance decreases in the presence of light, turning on the 2N3904 relay driver.

BACK-BIASED GaAsP LED OPERATES AS LIGHT SENSOR

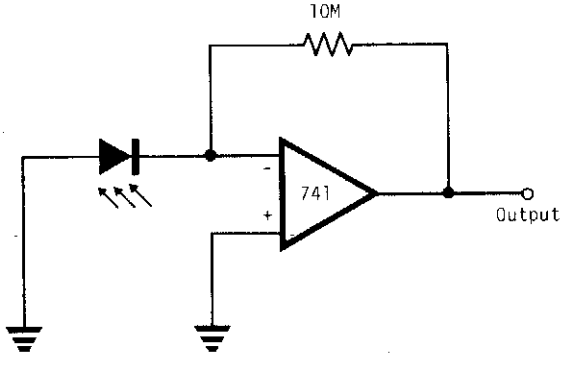

ELECTRONIC ENGINEERING

Fig. 51-5

Circuit Notes

Using a simple 741 amplifier connected as a current-to-voltage converter with the LED as the current source, the voltage at the output is proportional to incident light. The junction is biased only by the difference between the summing node junction potential and ground, preventing the possibility of reverse breakdown. The photon-generated current equals the short-circuit current of the junction, which is linearly related to incident light. The sensor requires a level of incident illumination that depends on the degree of opacity of the LED package.

TWILIGHT-TRIGGERED CIRCUIT

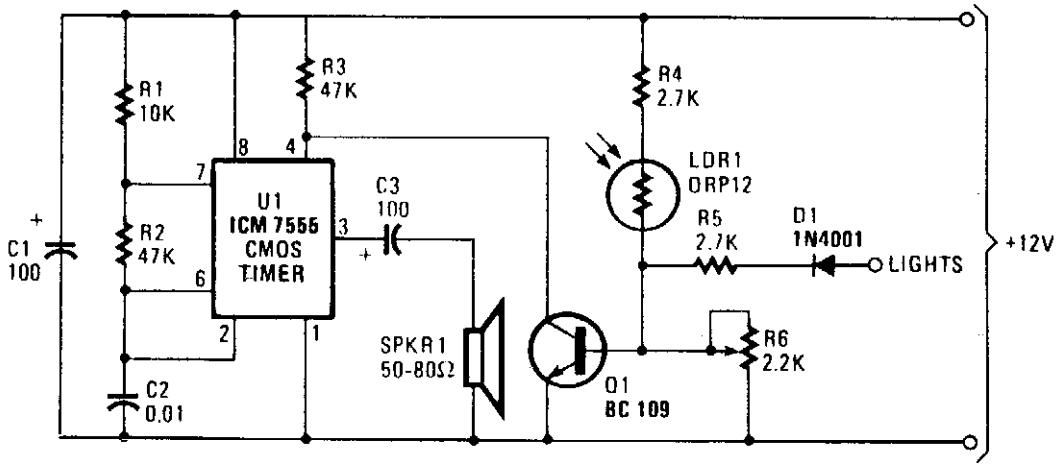

HANDS-ON ELECTRONICS

Fig. 51-6

Circuit Notes

As dusk begins to fall, the sensor (a cadmium-sulfide light-dependent resistor or LDR) operates a small horn to provide an audible reminder that it's time to turn on your lights. To turn the circuit off—simply turn your headlights on and the noise stops. The base of Q1 is fed through a voltage divider formed by R4, LDR1—a light-dependent resistor with an internal resistor of about 100 ohms under bright-light conditions and about 10 megohms in total darkness—potentiometer R6. Q1's base voltage depends on the light level received by LDR1 and the setting of R6. If LDR1 detects a high light level, its resistance decreases, thereby providing a greater base current for Q1, causing it to conduct. When Q1 conducts, pin 4 of U1 is pulled to near ground potential, muting the oscillator. If, on the other hand, LDR1 detects a low light level, its resistance increases (reducing base currentto Q1), cutting off the transistor and enabling the oscillator. In actual practice, you set R6 so that at a suitable light level (dusk), the oscillator will sound. The anode of diode D1 connects to the light switch, where it connects to the vehicle's parking lights. With the lights switched off, that point is connected to the negative chassis by way of the parking lamp. That has no effect on the circuit, as D1 blocks any current flow to ground from Q1's base via R6 and the sidelight lamps. When the lights are switched on, the anode of D1 is connected to the positive supply via the parking lamp switch, thereby applying a voltage to the base of Q1, biasing it into conduction. With Q1 conducting, pin 4 of U1 is pulled virtually to ground, disabling the oscillator even though LDR1's resistance is not enough to do so.

AUTOMATIC MOORING LIGHT

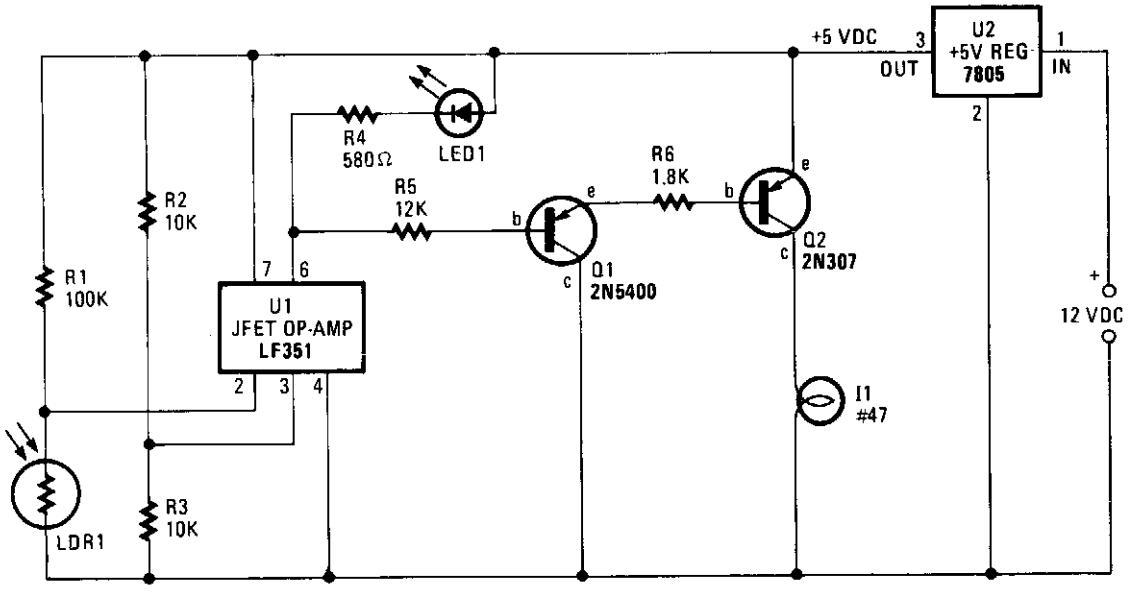

HANDS-ON ELECTRONICS

Fig. 51-7

Circuit Notes

Integrated-circuit U1—an LF351 or 741 op amp—is used as a comparator to control the light. Resistors R2 and R3 provide a reference voltage of about 2.5 volts at pin 3 of U1. When daylight falls on light-dependent resistor LDR1, its resistance is low: about 1000 ohms. In darkness, the LDR's resistance rises to about 1 megohm. Since R1 is 100,000 ohms, and the LDR in daylight is 1000 ohms, the voltage ratio is 100 to 1; the voltage drop across the LDR is less than the 2.5 volt reference voltage and pin 2 of U1 is held at that voltage. In that state, the output at pin 6 of U1 is positive at about 4.5 volts, a value that reverse-biases Q1 to cutoff, which in turn holds Q2 in cutoff, thereby keeping lamp I1 off. When darkness falls, the LDR's resistance rises above R1's value and the voltage at pin 2 of U1 rises above the reference voltage of 2.5 volts. U1's output terminal (pin 6) falls to less than a volt and Q1 is biased on. The base-to-emitter current flow turns Q2 on, which causes current to flow through the lamp. When daylight arrives, the LDR's resistance falls sharply, which causes the lamp to be turned off, ready to repeat the next night/day cycle.

ELECTRONIC WAKE-UP CALL

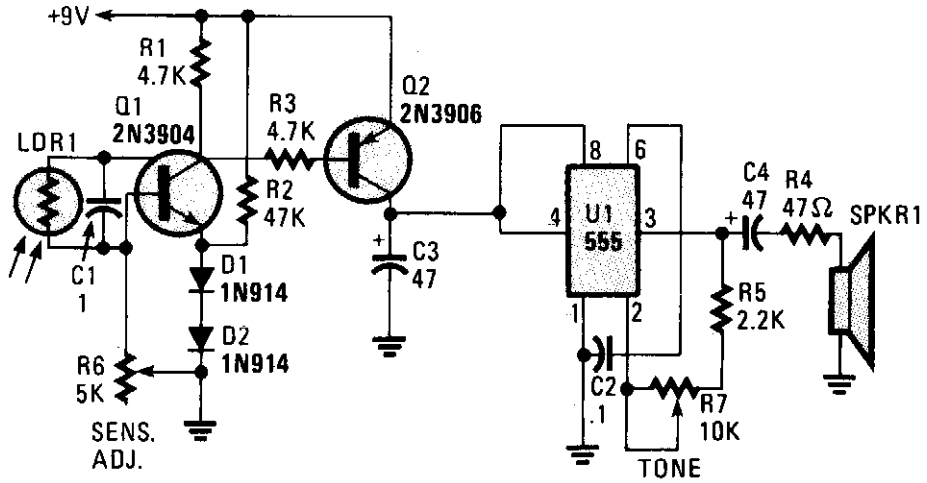

HANDS-ON ELECTRONICS

Fig. 51-8

Circuit Notes

A cadmium sulfide photocell (LDR1, which is a light-dependent resistor) is connected to the base and collector of an npn transistor, Q1. When light hits LDR1, the internal resistance goes from a very high (dark) value to a low (light) value, supplying base current to Q1, turning it on. The voltage across R1 produces a bias that turns Q2 on, which in turn, supplies the positive voltage to U1 at pin 8 (the positive-supply input) and pin 4 (the reset input), to operate the 555 audio oscillator circuit. The circuit's sensitivity to light can be set via R6 (a 50,000 ohm potentiometer). R7 sets the audio tone to the most desirable sound. The squarewave audio tone is fed from U1 pin 3 to a small speaker through coupling capacitor C4 and current limiting resistor R4.

PHOTODIODE SENSOR AMPLIFIER

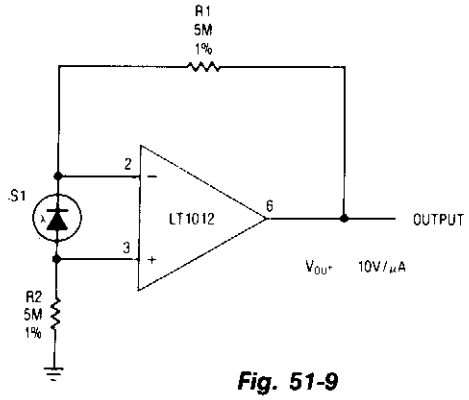

LINEAR TECHNOLOGY CORP.

Fig. 51-9

LIGHT-SEEKING ROBOT

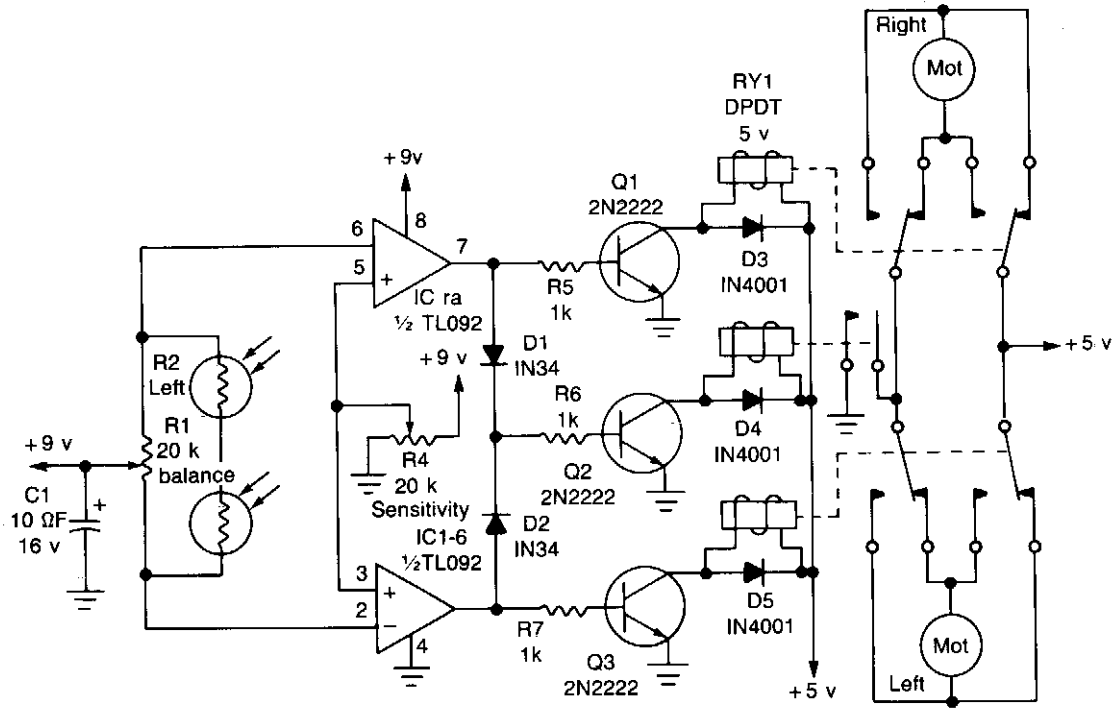

RADIO-ELECTRONICS

Fig. 51-10

Circuit Notes

The circuit is light seeking; it will follow a flashlight around a darkened room. A pair of photocells determine the direction in which the robot will move. Each photocell is connected to an op amp configured as a comparator. When sufficient light falls on photocell R2, the voltage at the inverting input (pin 6) of IC1-a will fall below the voltage at the non-inverting input (pin 5), so the output of the comparator will go high, and transistors Q1 and Q2 will turn on. That will enable relays RY1 and RY2, and thereby provide power for the right motor. The robot will then turn left. Likewise, when light falling on R3 lowers its resistance, Q2 and Q3 will turn on, the left motor will energize, and the robot will turn right.

SYNCHRONOUS PHOTOELECTRIC SWITCH

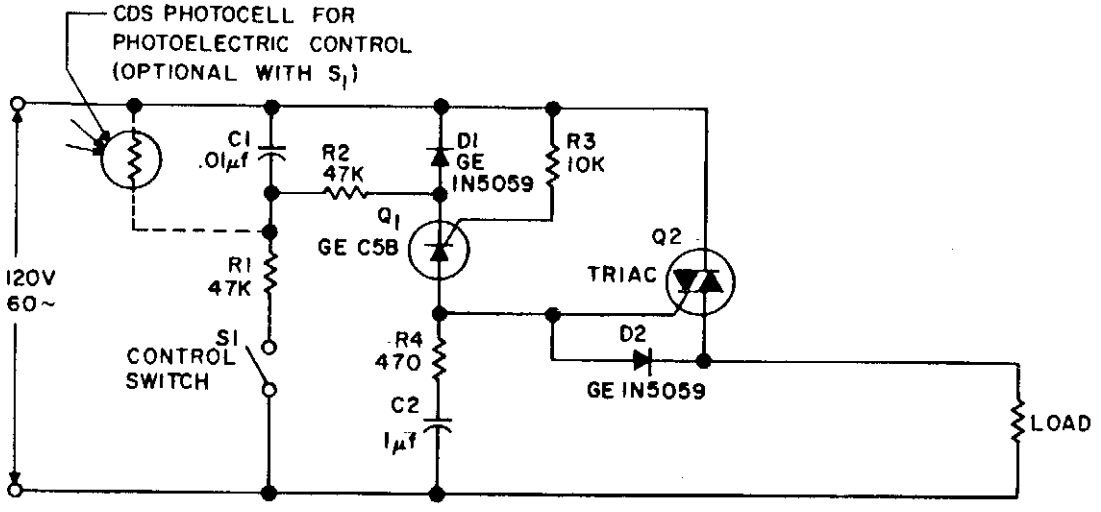

GENERAL ELECTRIC

Fig. 51-11

Circuit Notes

Synchronous switching is turning on only at the instant the ac supply voltage passes through zero, and turning off only when current passes through zero. This circuit provides this function in response to either a mechanical switch or a variable resistance such as a cadmium-sulfide photocell. This circuit produces the minimum disturbance to the power supply when switching, and always conducts an integral number of whole cycles. It is ideal for use wherever RFI and audio filtering is undesirable, where magnetizing inrush current of transformers causes nuisance fuse-blowing, and where sensitive equipment must operate in the vicinity of power switches.

PHOTOCURRENT INTEGRATOR

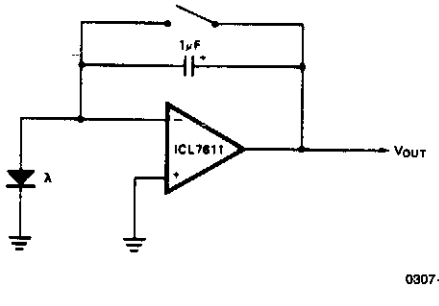

INTERSIL

Fig. 51-12

Circuit Notes

Low leakage currents allow integration times up to several hours.

ROBOT EYES

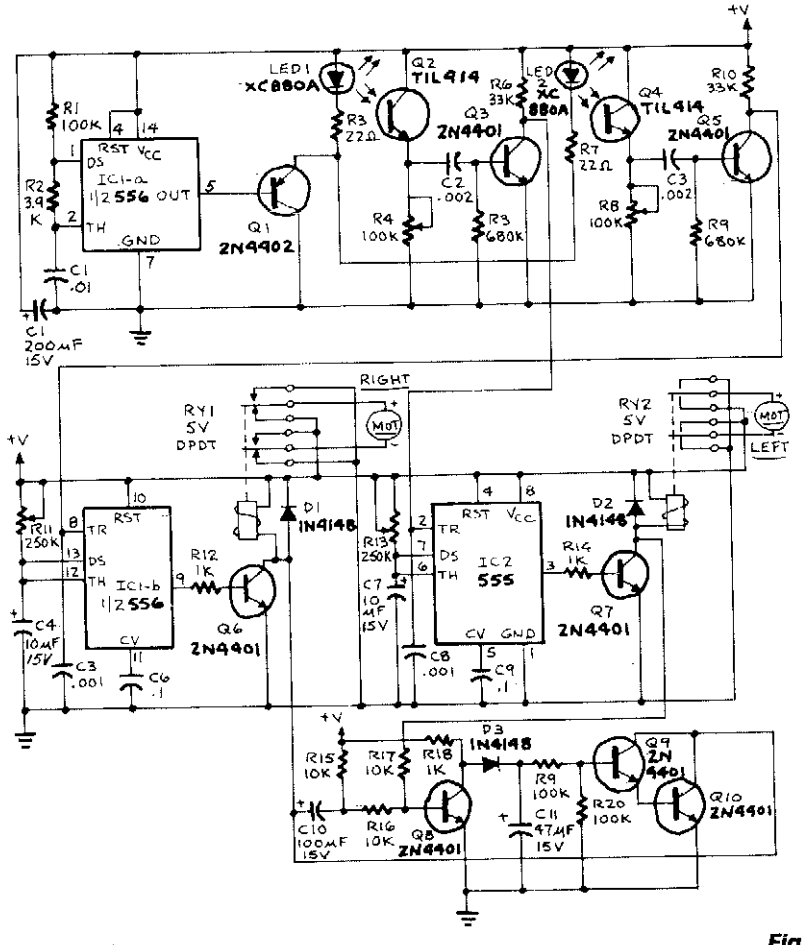

RADIO ELECTRONICS

Fig. 51-13

Circuit Notes

An infrared LED and a phototransistor are used for each eye. Half of a 556 timer IC (IC1-a) functions as an astable multivibrator oscillating at a frequency of about 1 kHz. That IC drives transistor Q1 which in turn drives the two infrared LED's, LED1 and LED2. The right eye is composed of LED1 and Q2. If an obstacle appears in front of the right eye, pulses from LED1 are reflected by the obstacle and detected by Q2. The signal from Q2 is amplified by Q3, which triggers IC2, a 555. That IC operates in the monostable mode, and it provides a pulse output with a width of as much as 2.75 seconds, depending on the setting of R11. That pulse output energizes relay RY1, and that reverses the polarity of the voltage applied to the motor. Corresponding portions of the circuit of the left eye operate in the same fashion, using the unused half of the 556 (IC1-b). That action causes the robot to turn away from an obstacle.

MODULATED LIGHT-BEAM CIRCUIT CANCELS AMBIENT LIGHT EFFECTS

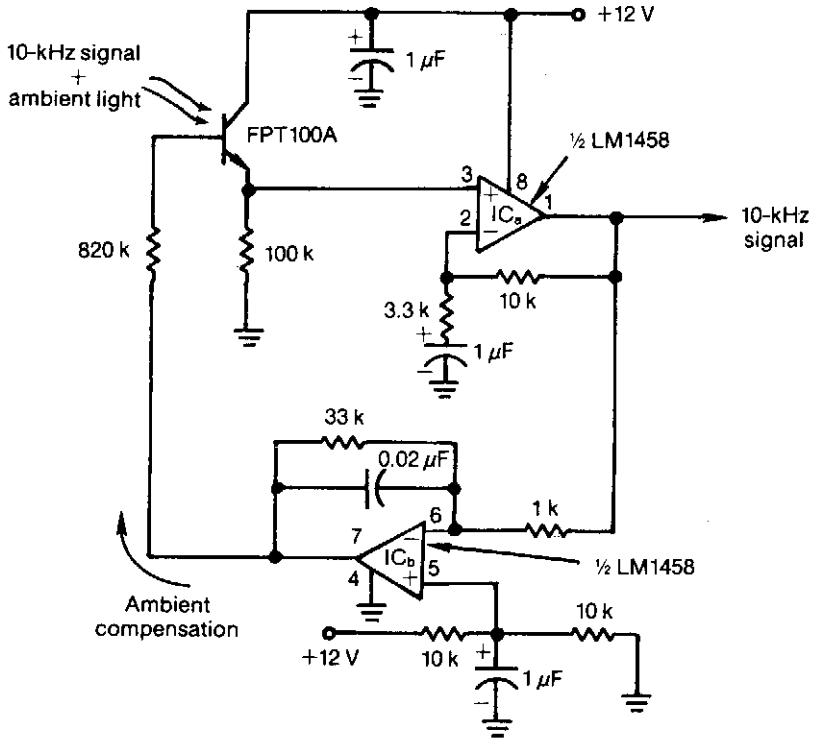

Fig. 51-14

ELECTRONIC DESIGN

Circuit Notes

Feedback control of the phototransistor in this optical detector helps negate the effects of varying ambient light sources. The output of a modulated visible-light LED is detected, amplified, buffered, and fed through a low-pass filter. Ambient light signals below the LED's 10-kHz modulating rate reach the detector's base out of phase with incoming ambient light and cancel the undesired effects.

MONOSTABLE PHOTOCELL CIRCUIT HAS SELF-ADJUSTING TRIGGER LEVEL

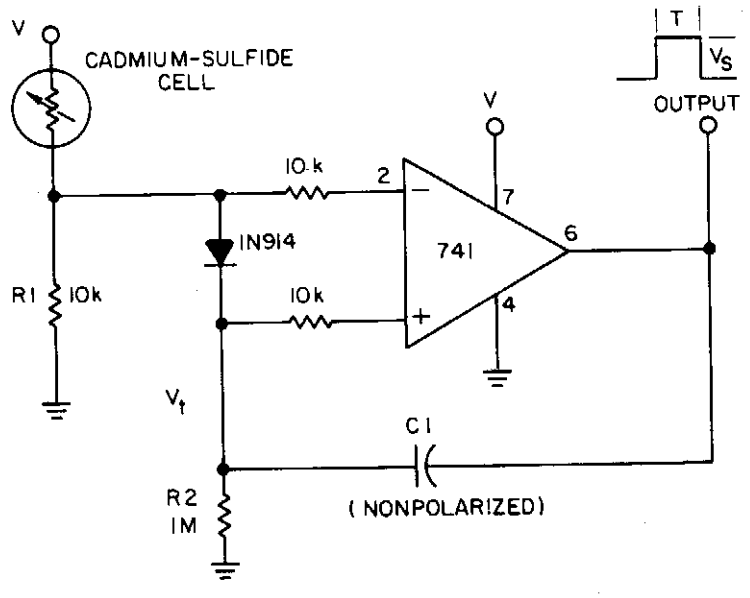

ELECTRONIC DESIGN

Fig. 51-15

Circuit Notes

A photocell circuit provides automatic threshold adjustment. Monostable action prevents undesired retriggering of the output. With only one op amp IC, the circuit offers: Automatic adjustment of its trigger level to accommodate various light sources, changes in ambient light and misalignments; A built-in monostable action to provide only a single output pulse during a preset time; Feedback action to raise the threshold level after triggering and to speed switching. The feedback also eliminates the circuit's tendency to oscillate during switching.

THERMALLY STABILIZED PIN PHOTODIODE SIGNAL CONDITIONER

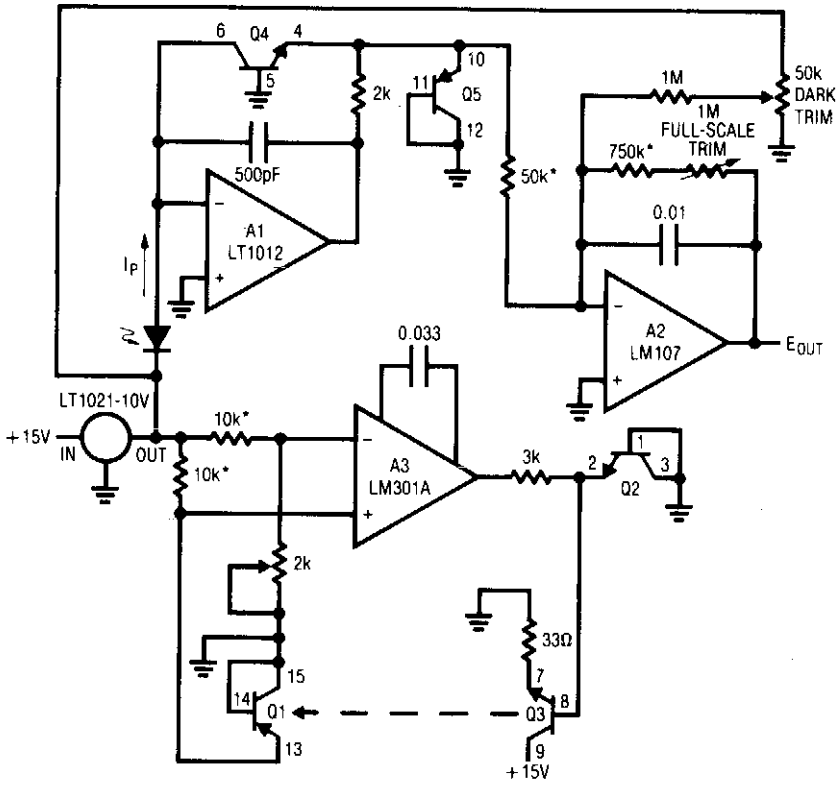

LINEAR TECHNOLOGY CORPORATION

Fig. 51-16

Circuit Notes

The photodiode specified responds linearly to light intensity over a 100 dB range. Digitizing the diodes linearly amplified output would require an A-D converter with 17 bits of range. This requirement can be eliminated by logarithmically compressing the diode's output in the signal conditioning circuity. A1 and Q4 convert the diode's photocurrent to voltage output with a logarithmic transfer function. A2 provides offsetting and additional gain. A3 and its associated components form a temperature control loop

RESPONSE DATA

LIGHT (900μM)	DIODE CURRENT	CIRCUIT OUTPUT
1mW	350μA	10.0V
100μW	35μA	7.85V
10μW	3.5μA	5.70V
1μW	350nA	3.55V
100nW	35nA	1.40V
10nW	3.5nA	−0.75V

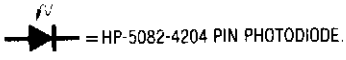

= HP-5082-4204 PIN PHOTODIODE.

Q1–Q5 = CA3096.
CONNECT SUBSTRATE OF CA3096 ARRAY TO Q4'S EMITTER.
*1% RESISTOR

which maintains Q4 at constant temperature (all transistors in this circuit are part of a CA3096 monolithic array). The 0.033 μF value at A3's compensation pins gives good loop damping if the circuit is built using the array's transistors in the location shown. Because of the array die's small size, response is quick and clean. A full-scale step requires only 250 ms to settle to final value. To use this circuit, first set the thermal control loop. To do this, ground Q3's base and set the 2 k pot so A3's negative input voltage is 55 mV above its positive input. This places the servo's setpoint at about 50°C (25°C ambient + (2.2 mV/°C × 25°C rise = 55 mV = 50°C). Unground Q3's base and the array will come to temperature. Next, place the photodiode in a completely dark environment and adjust the "dark trim" so A2's output is 0 V. Finally, apply or electrically simulate 1 mW of light and set the "full-scale" trim for 10 V out. Once adjusted, this circuit responds logarithmically to light inputs from 10nW to 1mW with an accuracy limited by the diode's 1% error.

52
Logic Amplifiers

The sources of the following circuits are contained in the Sources section beginning on page 694. The figure number contained in the box of each circuit correlates to the source entry in the Sources section.

Low Power Inverting Amplifier with Digitally Selectable Gain
Low Power Binary to 10^N Gain Low Frequency Amplifier
Low Power Non-Inverting Amplifier with Digitally Selectable Inputs and Gain
Programmable Amplifier
A Precision Amplifier with Digitally Programmable Inputs and Gains

LOW POWER INVERTING AMPLIFIER WITH DIGITALLY SELECTABLE GAIN

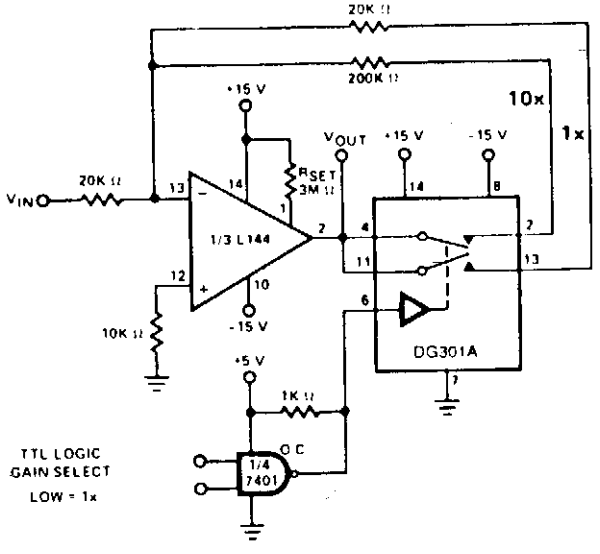

SILICONIX

Fig. 52-1

LOW POWER BINARY TO 10^n GAIN LOW FREQUENCY AMPLIFIER

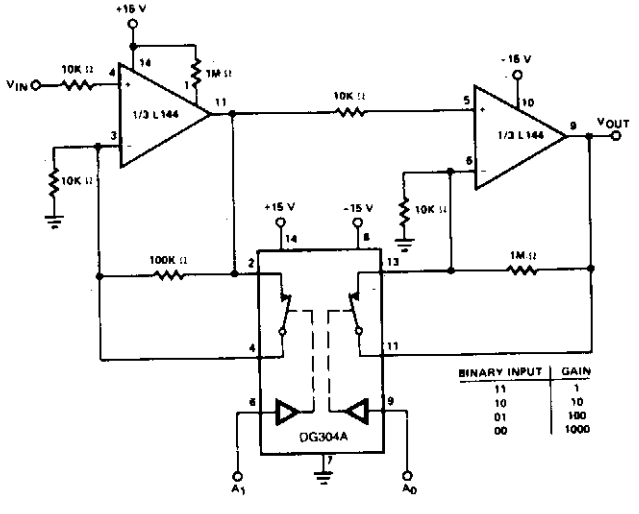

SILICONIX

Fig. 52-2

Circuit Notes

Gain increases by decades as the binary input decreases from 1,1 to 0,0. Minimum gain is 1 and maximum gain is 1000. Since the switch is static in this type of amplifier the power dissipation of the switch will be less than a tenth of a milliwatt.

LOW POWER NON-INVERTING AMPLIFIER WITH DIGITALLY SELECTABLE INPUTS AND GAIN

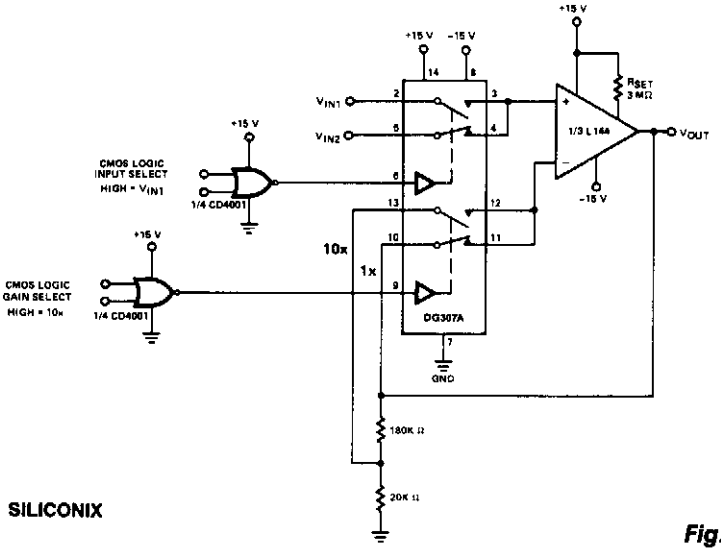

SILICONIX

Fig. 52-3

PROGRAMMABLE AMPLIFIER

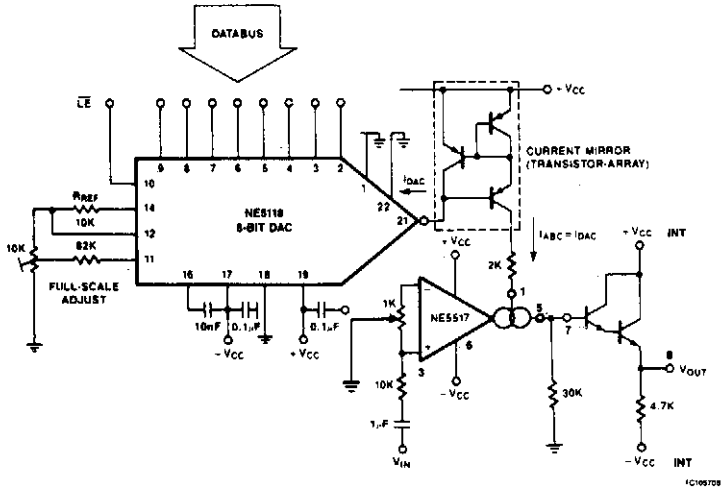

SIGNETICS

Fig. 52-4

Circuit Notes

The intention of the following application shows how the NE5517 works in connection with a DAC. In the application, the NE5118 is used—an 8-bit DAC with current output—its input register making this device fully μP-compatible. The circuit consists of three functional blocks; the NE5118 which generates a control current equivalent to the applied data byte, a current mirror, and the NE5517.

A PRECISION AMPLIFIER WITH DIGITALLY PROGRAMMABLE INPUTS AND GAIN

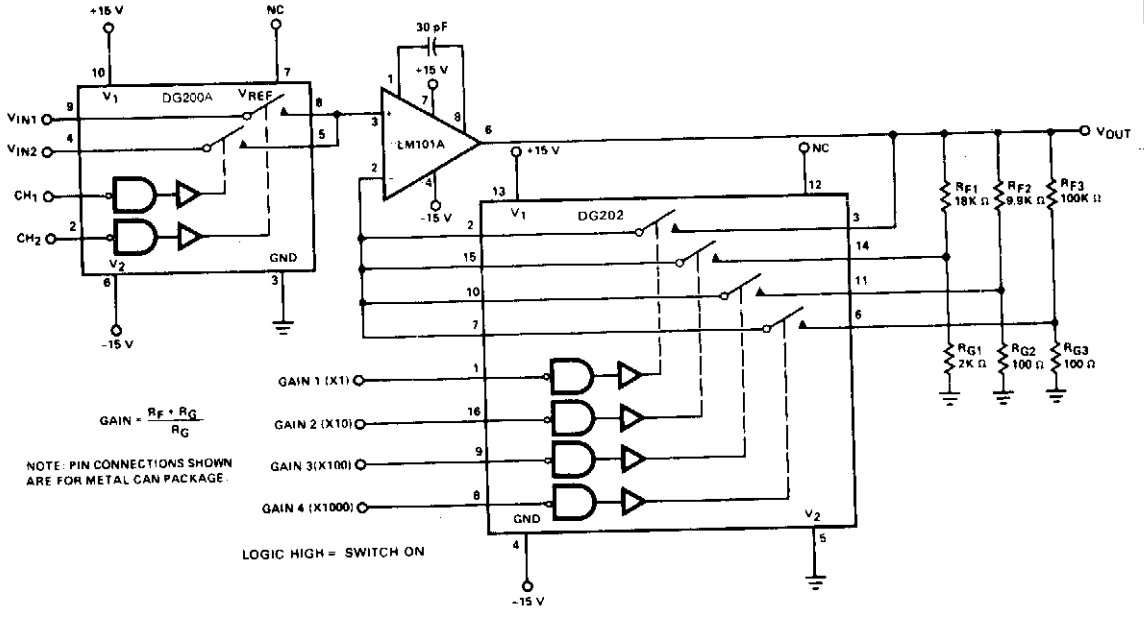

Fig. 52-5

SILICONIX

53
LVDT Circuits

The sources of the following circuits are contained in the Sources section beginning on page 694. The figure number contained in the box of each circuit correlates to the source entry in the Sources section.

LVDT Driver Demodulator
Linear Variable Differential Transformer Signal Conditioner

LVDT DRIVER DEMODULATOR

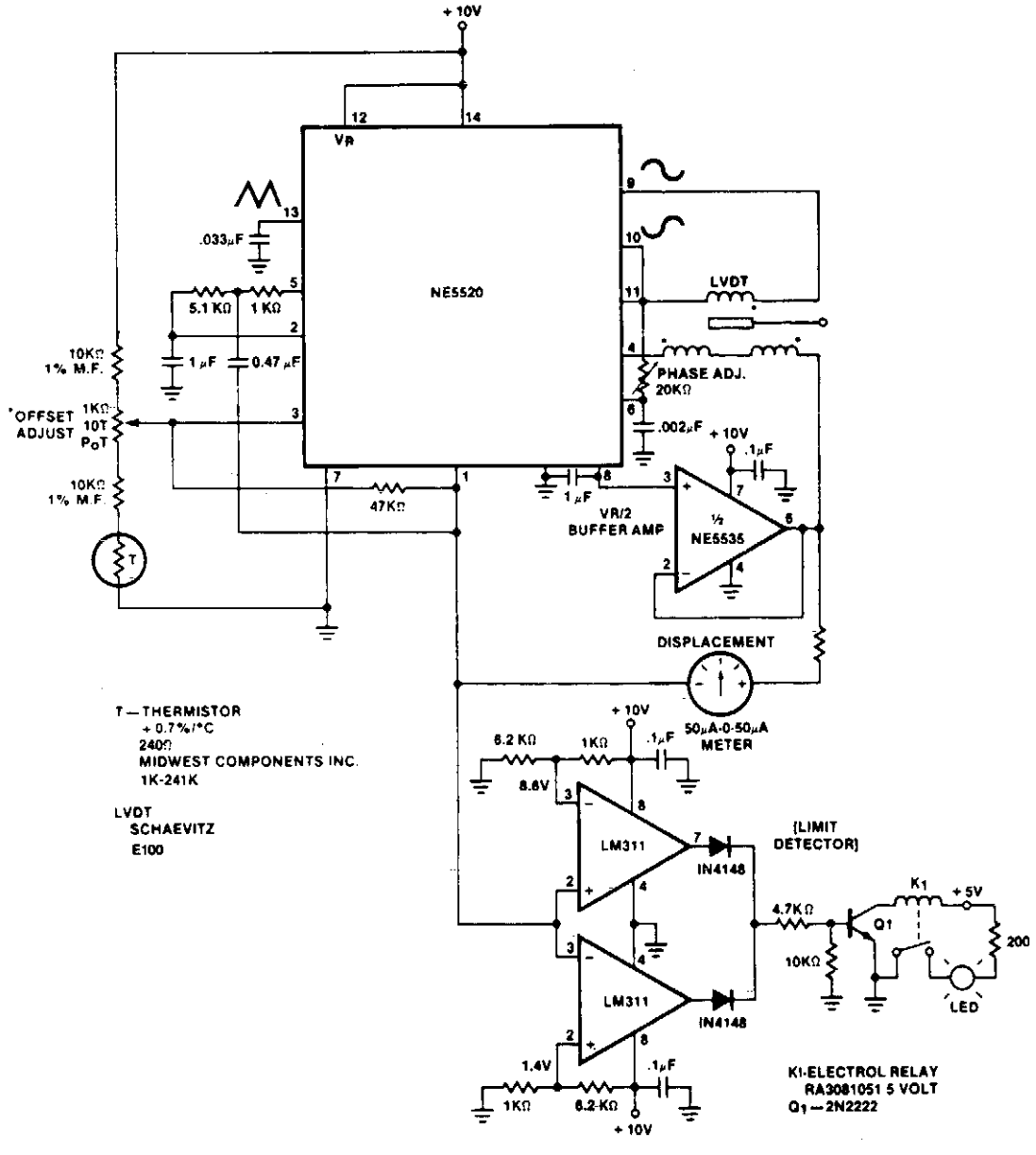

SIGNETICS

Fig. 53-1

LINEAR VARIABLE DIFFERENTIAL TRANSFORMER SIGNAL CONDITIONER

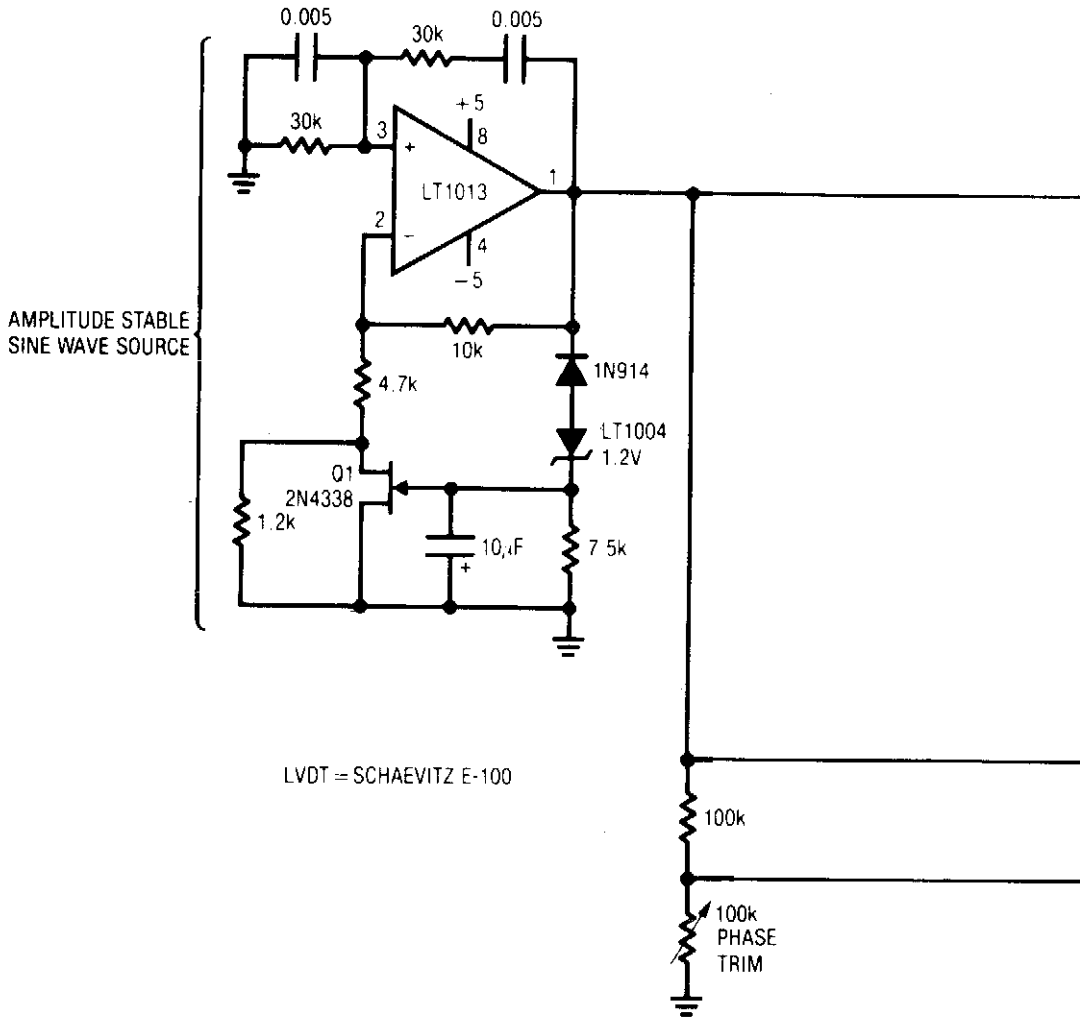

LINEAR TECHNOLOGY CORPORATION

Fig. 53-2

Circuit Notes

A1 and its associated components furnish an amplitude stable sine wave source. A1's positive feedback path is a Wein bridge, tuned for 1.5 kHz, Q1, the LT1004 reference, and additional components in A1's negative loop unity-gain stabilize the amplifier. A1's output an amplitude stable sine wave, drives the LVDT. C1 detects zero crossings and feeds the LTC1043 clock pin. A speed-up network at C1's input compensates LVDT phase shift, synchronizing the LTC1043's clock to the transformer's output zero

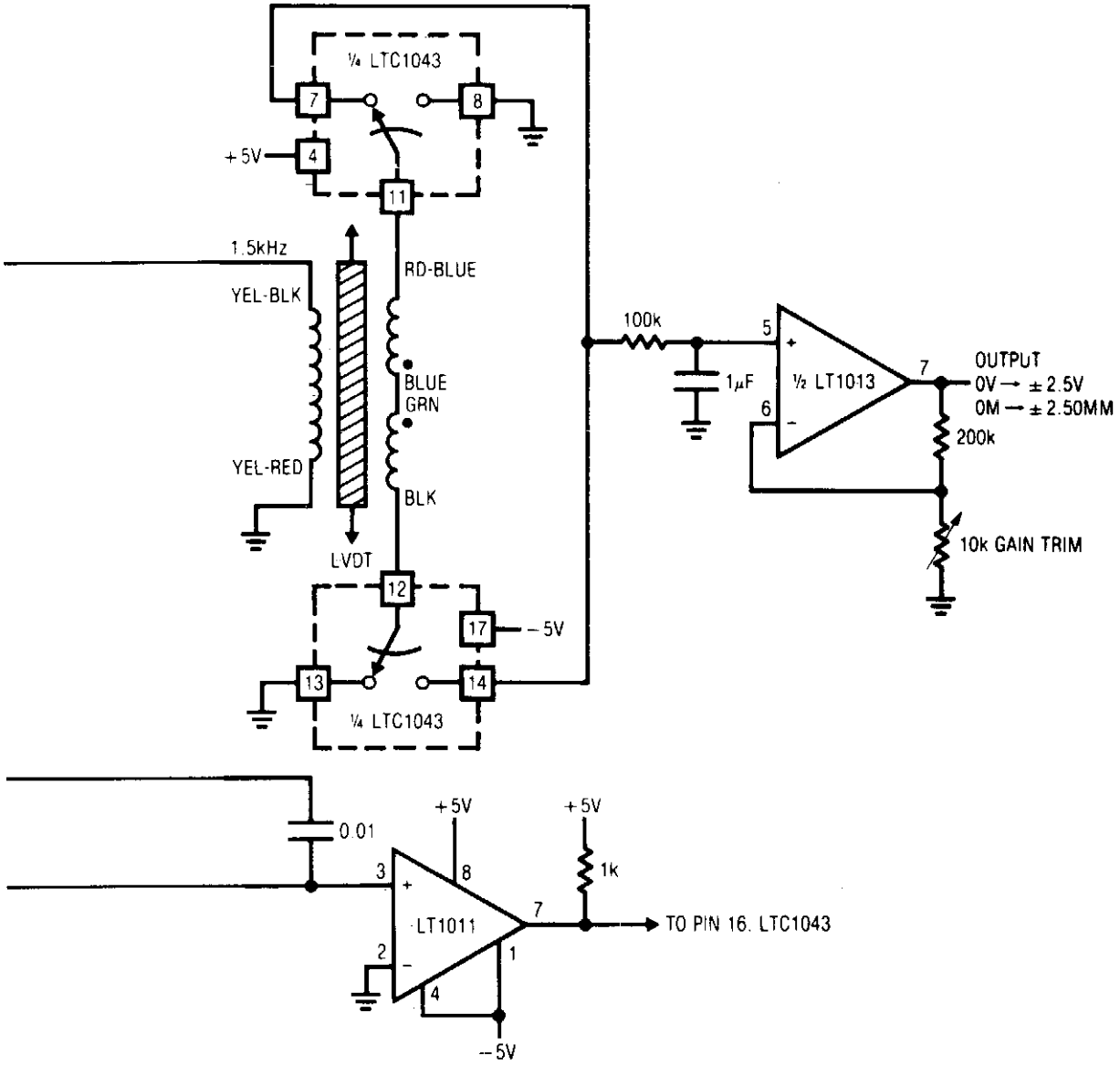

crossings. The LTC1043 alternately connects each end of the transformer to ground, resulting in positive half-wave rectification at pins 7 and 14. These points are summed at a low-pass filter which feeds A2. A2 furnishes gain scaling and the circuit's output. The LTC1043's synchronized clocking means the information presented to the low-pass filter is amplitude and phase sensitive. The circuit output indicates how far the core is from center and on which side. To calibrate this circuit, center the LVDT core in the transformer and adjust the phase trim for 0 V output. Next, move the core to either extreme position and set the gain trim for 2.50 V output.

54
Measuring and Test Circuits

The sources of the following circuits are contained in the Sources section beginning on page 694. The figure number contained in the box of each circuit correlates to the source entry in the Sources section.

Magnetometer
Resistance-Ratio Detector
Continuity Tester for PCB's
Wire Tracer
Diode Testing
Measuring Phase Difference from 0° to ±180°
Ground Tester
Making Slow Logic Pulses Audible
Unidirectional Motion Sensor

MAGNETOMETER

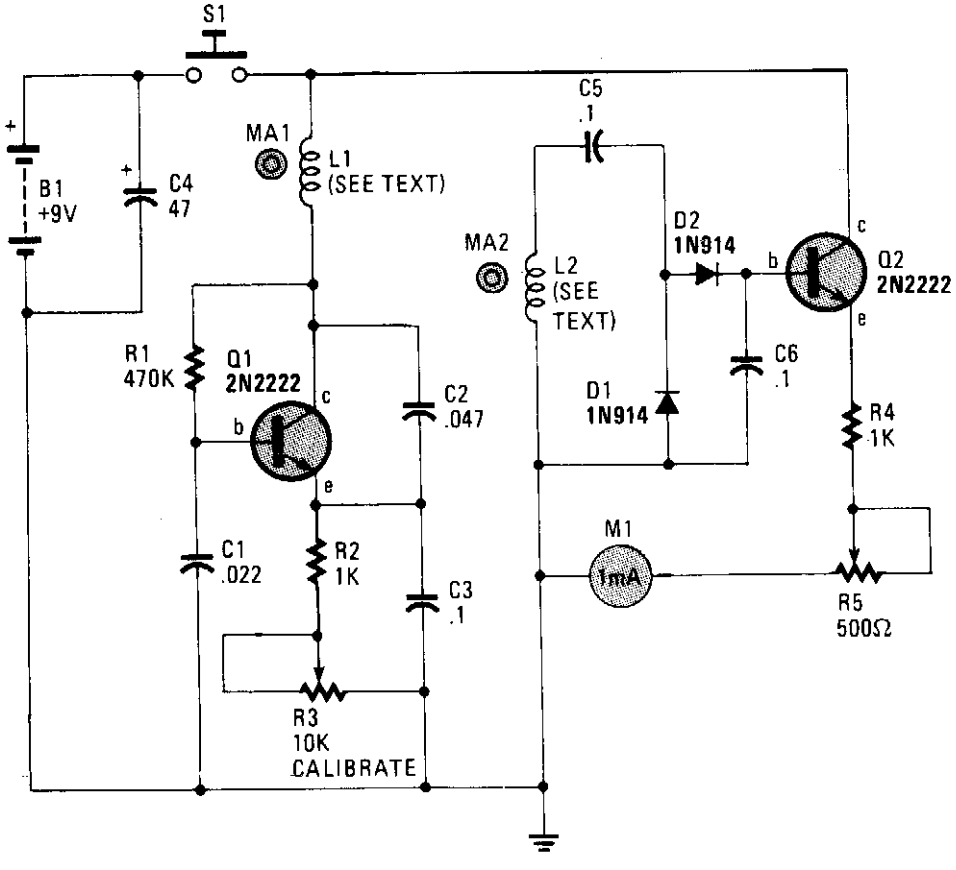

HANDS-ON ELECTRONICS

Fig. 54-1

Circuit Notes

The circuit uses two general-purpose npn transistors, Q1 and Q2, and a special hand-wound, dual-coil probe ferrets out the magnetism. Q1 and its associated components form a simple VLF oscillator circuit, with L1, C2, and C3 setting the frequency. The VLF signal received by the pickup coil, L2, is passed through C5 and rectified by diodes D1 and D2. The small dc signal output from the rectifier is fed to the base of Q2 (configured as an emitter follower), which is then fed to a 0-1 mA meter, M1.

RESISTANCE-RATIO DETECTOR

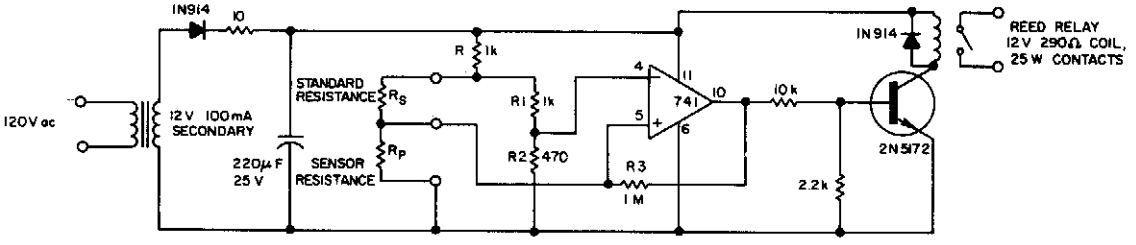

ELECTRONIC DESIGN

Fig. 54-2

Circuit Notes

Applications such as photoelectric control, temperature detection and moisture sensing require a circuit that can accurately detect a given resistance ratio. A simple technique that uses an op amp as a sensing element can provide 0.5% accuracy with low parts cost. The reed-relay contacts close when the resistance of the sensor Rp equals 47% of the standard Rs. Adjusting either R1 or R2 provides a variable threshold; the threshold is controlled by varying R3. For the most part, the type of resistors used for R1 and R2 determines the accuracy and stability of the circuit. With metal-film resistors, less than 0.5% change in ratio sensing occurs over the commercial temperature range (0 to 70 C) with ac input variations from 105 to 135 V.

CONTINUITY TESTER FOR PCB'S

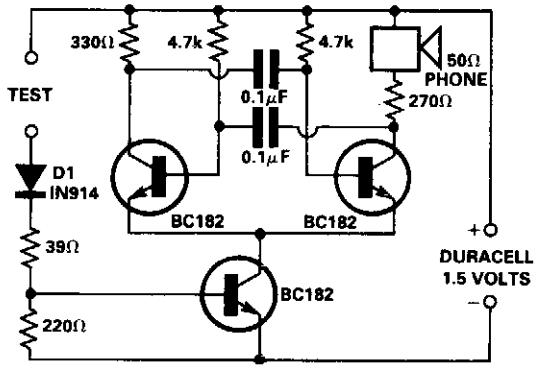

ELECTRONIC ENGINEERING

Fig. 54-3

Circuit Notes

The continuity tester is for tracing wiring on printed circuit boards. It only consumes any appreciable power when the test leads are shorted, so no On/Off switch is used or required. The applied voltage at the test terminals is insufficient to turn on diodes or other semiconductors. Resistors below 50 ohms act as short circuit; above 100 ohms as open circuit. The circuit is a simple multivibrator—T1 and T2, which are switched on by transistor T3. The components in the base of T3 are D1, R1, R2, and the test resistance. With a 1.5 volt supply, there is insufficient voltage to turn on a semiconductor connected to the test terminals. The phone is a telephone earpiece but a 30 ohm speaker would work equally as well.

WIRE TRACER

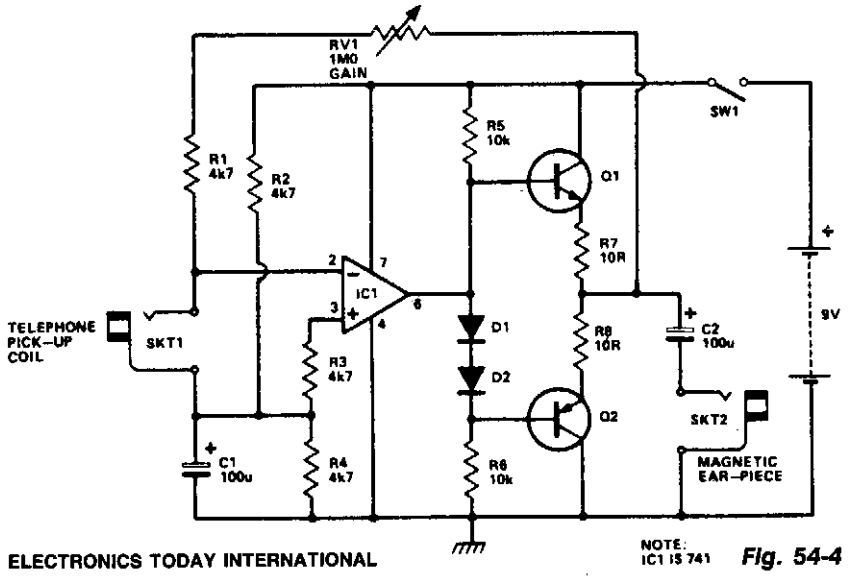

Fig. 54-4

Circuit Notes

The tracer detects the weak magnetic field of any current-carrying house wiring and amplifies this signal to a level that is adequate for driving a magnetic earpiece. The unit uses a telephone pick-up coil to detect the magnetic field.

DIODE TESTING

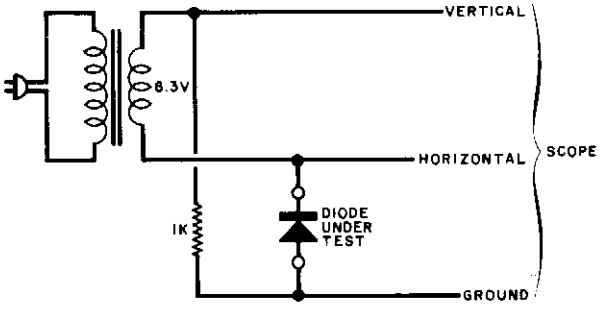

Fig. 54-5

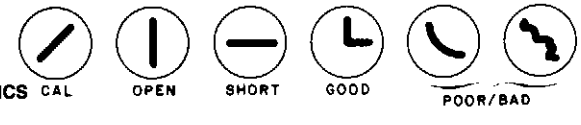

POPULAR ELECTRONICS

Circuit Notes

The circuit will display curves on a scope, contingent on the state of the diode. To "calibrate," substitute a 1000-ohm resistor for the diode and adjust the scope gains for a 45-degree line. The drawings show some expected results.

MEASURING PHASE DIFFERENCE FROM 0° to ±180°

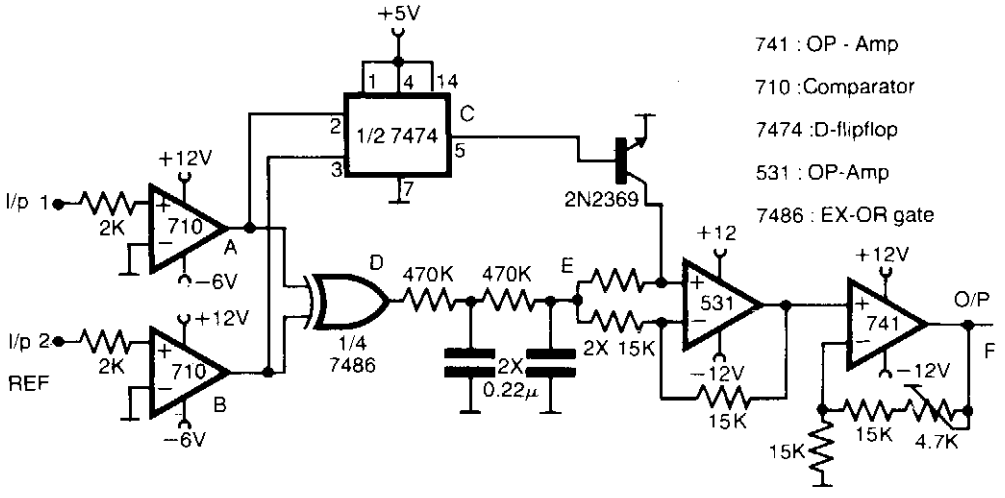

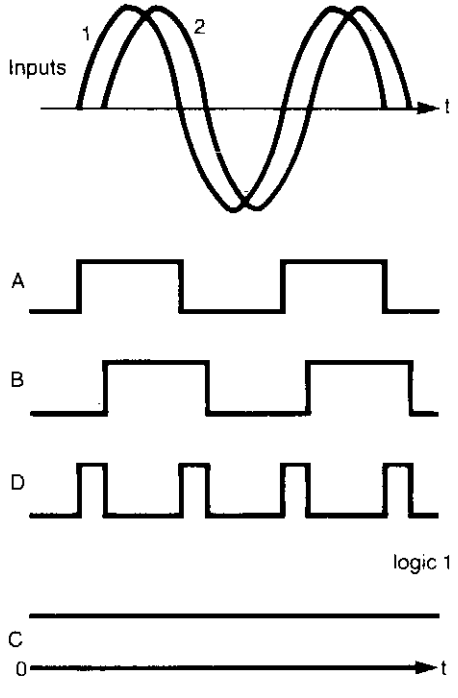

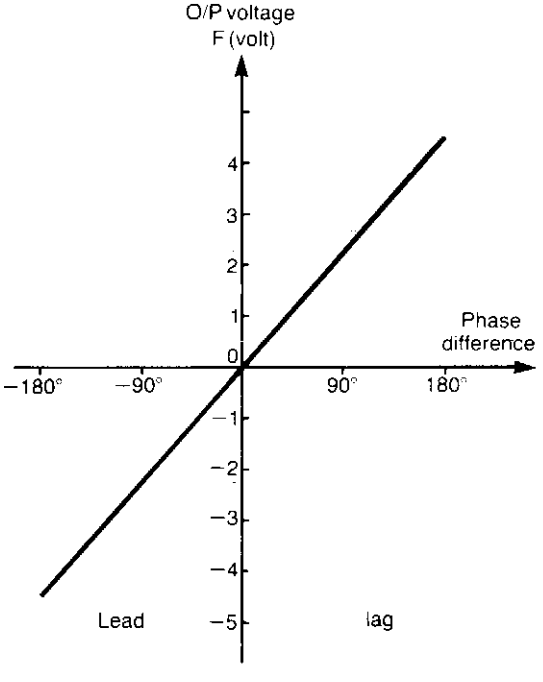

ELECTRONIC ENGINEERING

Fig. 54-6

MEASURING PHASE DIFFERENCE FROM 0° to ±180°, Continued.

Circuit Notes

This method is capable of measuring phase between 0 to ±180°. The generated square waves A and B are fed to a D flip-flop which gives an output C equal to logic 1 when input 1 leads input 2 and equal to logic 0 in case of lagging. When C = logic 0, the output of the amplifier F will be positive proportional to the average value E of the output of the EX-OR. When C = logic 1, F will be negative and also proportional to E by the same factor. Hence, the output of the meter is positive in case of lagging and negative for leading. The circuit is tested for sinusoidal inputs and indicates a linearity within 1%. Measurements are unaffected by the frequency of the inputs up to 75 kHz.

GROUND TESTER

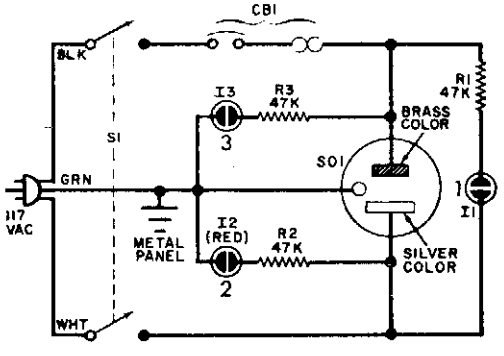

Circuit Notes

The circuit is simple and foolproof if wired correctly. Under normal conditions, only lamps 1 and 3 should be lit. If lamp 2 comes on, the cold lead is 117 volts above ground.

POPULAR ELECTRONICS *Fig. 54-7*

MAKING SLOW LOGIC PULSES AUDIBLE

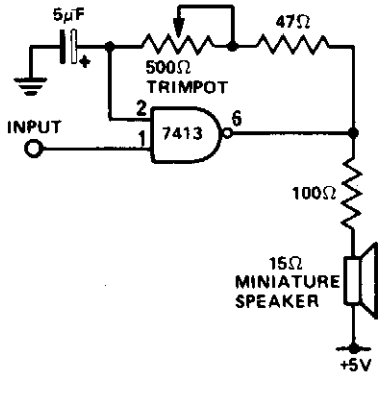

Circuit Notes

This circuit is useful for monitoring slow logic pulses as a keying monitor or digital clock alarm. The Schmitt trigger is connected as an oscillator. The trimpot controls the pitch of the output. When the input goes high, the circuit will oscillate.

ELECTRONICS TODAY INTERNATIONAL *Fig. 54-8*

UNIDIRECTIONAL MOTION SENSOR

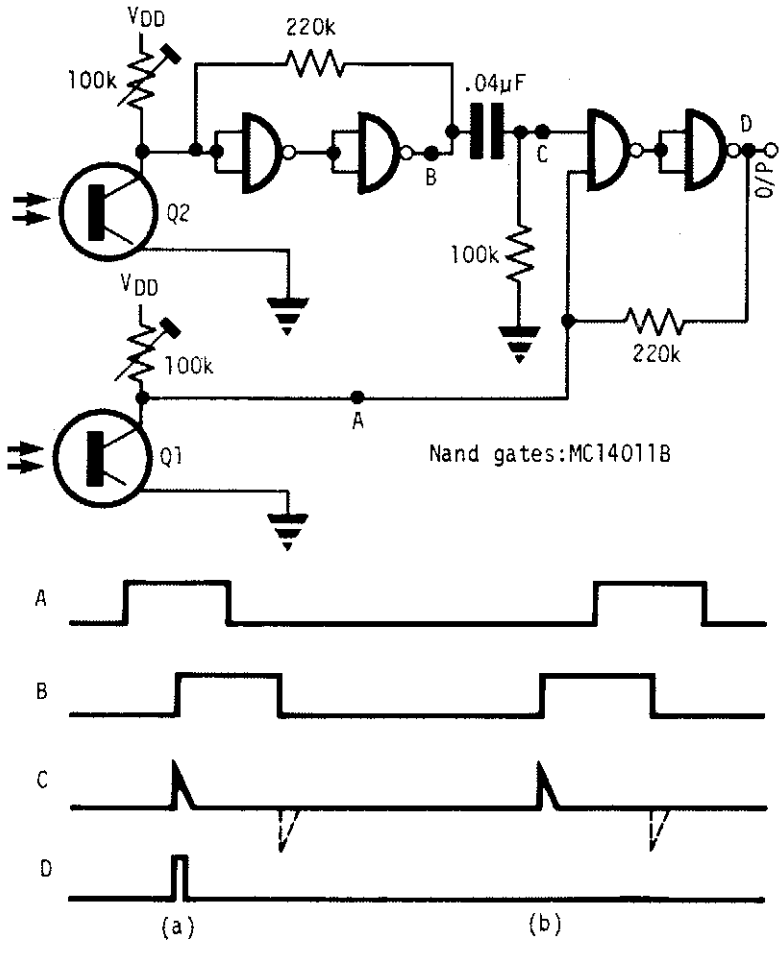

ELECTRONIC ENGINEERING

Fig. 54-9

Circuit Notes

This circuit detects an object passing in one direction but ignores it going the opposite way. Two sensors define the sense of direction. The object blocks the light to phototransistor Q1 or Q2 first dependent on the direction of approach. When the object passes Q1 then Q2, an output pulse is generated at D; while no pulse is seen at D as the object passes Q2 then Q1. Object length (measured along the direction of the two sensors) should be greater than the separation of the two sensors Q1 and Q2.

55
Medical Electronics Circuits

The sources of the following circuits are contained in the Sources section beginning on page 694. The figure number contained in the box of each circuit correlates to the source entry in the Sources section.

Heart Rate Monitor
Medical Instrument Preamplifier

HEART RATE MONITOR

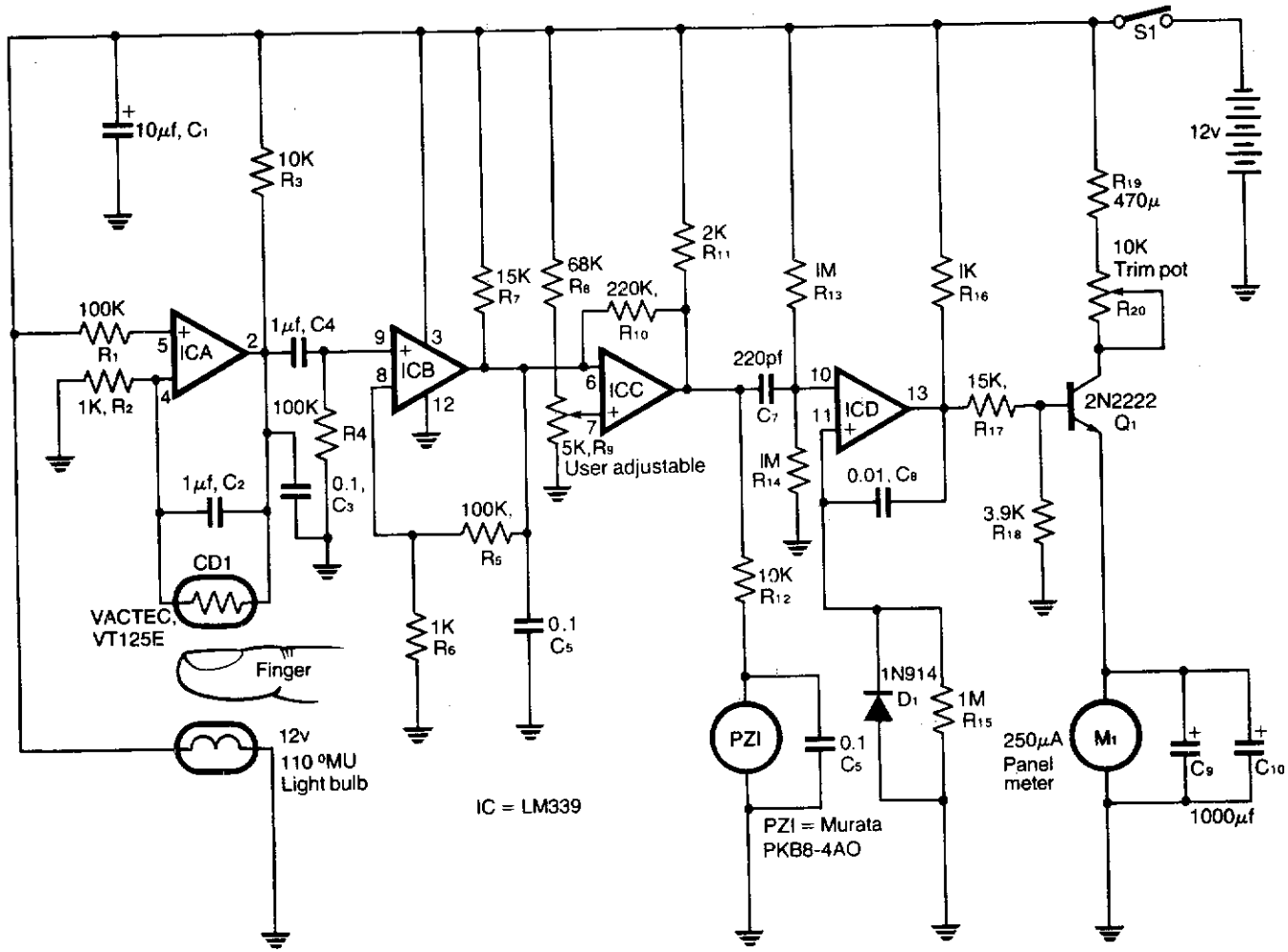

ELECTRONIC ENGINEERING

Fig. 55-1

HEART RATE MONITOR, Continued.

Circuit Notes

Light filtering through the finger tip is detected by the cadmium sulphide photoresistor CD1 which forms the feedback network for transducer amplifier section ICA producing a weak signal which is further amplified by ICB. This signal is now compared against a user adjusted threshold, comparator ICD triggers gating on the piezoelectric buzzer PZ1. On each falling edge of the comparator's output signal one-shot multivibrator ICD produces a 2 μs pulse which is inverted by Q1 and averaged by the RC network consisting of M1, C6 and C7. The 10 K trimpot R20 in Q1's collector circuit sets the scale factor for M_1 where full scale is 150 beats per minute.

MEDICAL INSTRUMENT PREAMPLIFIER

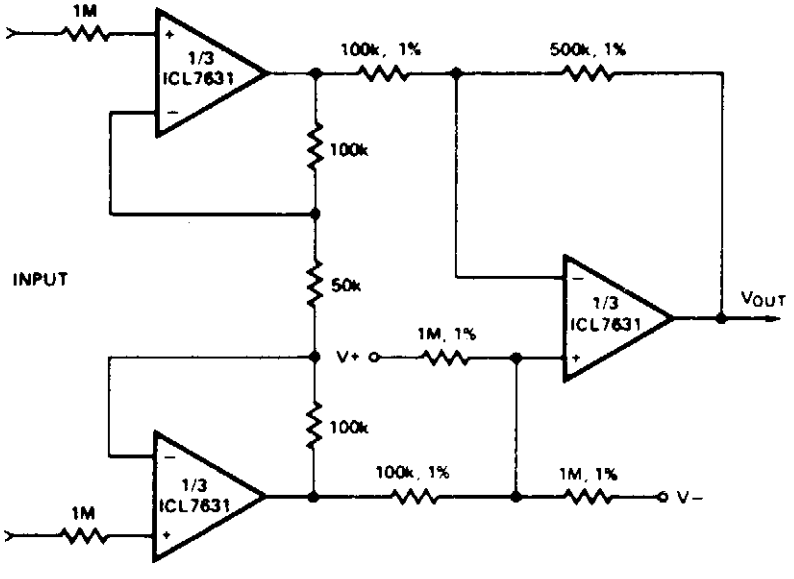

INTERSIL

Fig. 55-2

Circuit Notes

Note that A_{VOL} = 25; single Ni-cad battery operation. Input current (from sensors connected to the patient) is limited to less than 5 μA under fault conditions.

56
Metal Detectors

The sources of the following circuits are contained in the Sources section beginning on page 694. The figure number contained in the box of each circuit correlates to the source entry in the Sources section.

Metal Locator II
Metal Locator

METAL LOCATOR II

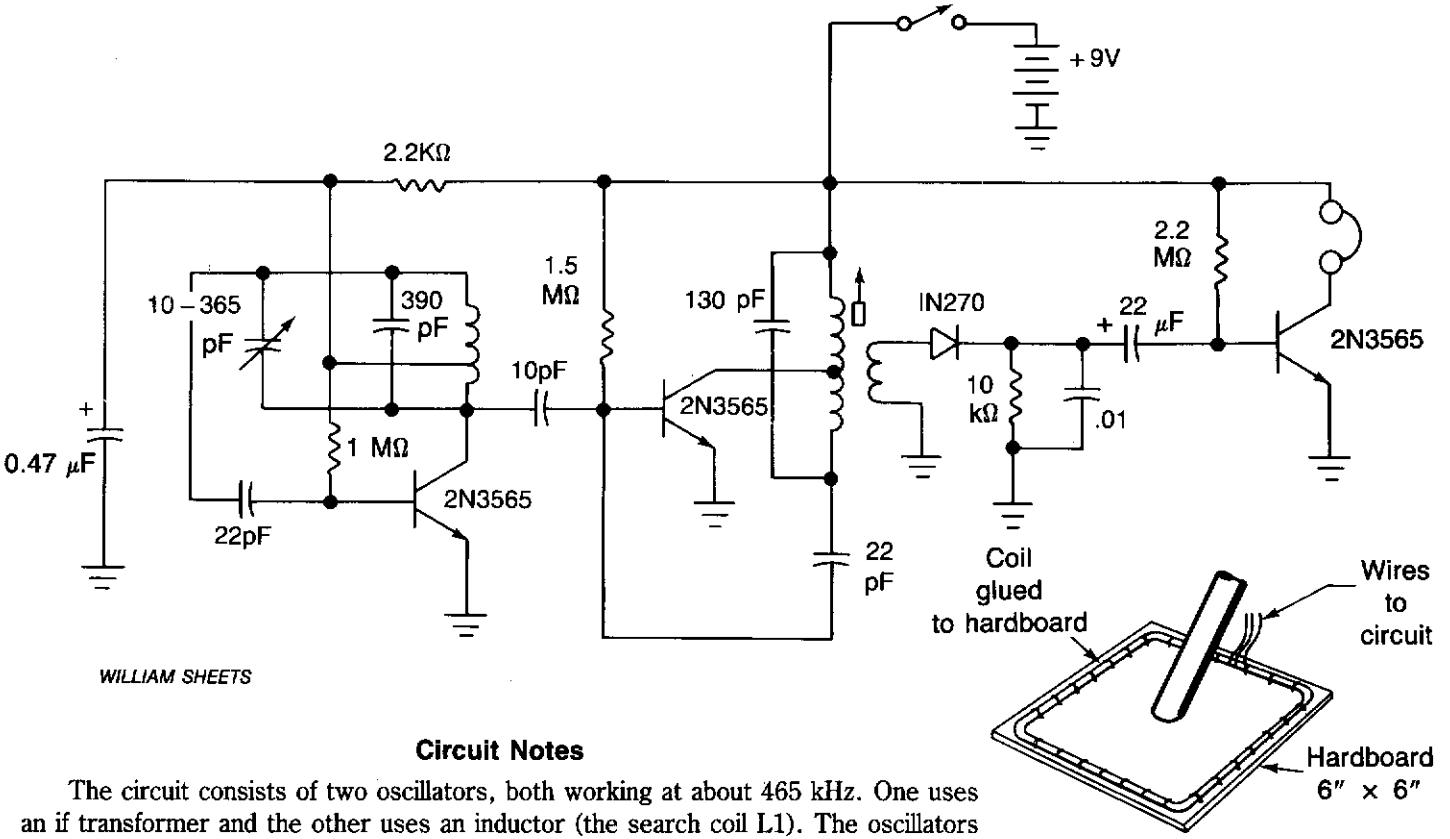

WILLIAM SHEETS

Circuit Notes

The circuit consists of two oscillators, both working at about 465 kHz. One uses an if transformer and the other uses an inductor (the search coil L1). The oscillators are coupled by a capacitor (10 pF). A beat note (produced if the two oscillators are working closely together) is detected by the diode and fed to the headphone amplifier and the 22 μF capacitor. The search coil oscillator is tuned by a 10-365 pf variable capacitor. The search coil comprises 22 turns of wire (any gauge between 24 swg and 36 swg enamel) center tapped. The wire should be wound on a temporary form then taped and glued to a piece of hardboard. The coil size should be about 6″ × 6″. Headphones should be high impedance.

Fig. 56-1

METAL LOCATOR

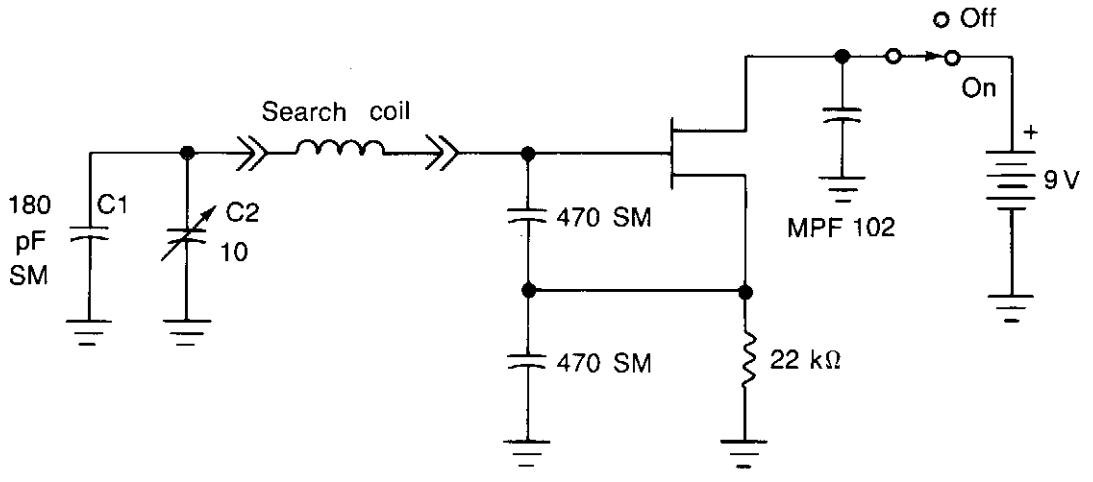

WILLIAM SHEETS

Fig. 56-2

Circuit Notes

The search coil, C1 and C2 form a tuned circuit for the oscillator which is tuned near the center of the broadcast band. Tune a portable radio to a station near the middle of the band, then tune C2 until a squeal is heard as the two signals mix to produce a beat (heterodyne) note. Metal near the search coil will detune the circuit slightly, changing the pitch of the squeal. The search coil is 20 turns of number 30 enameled wire, wound on a 6″ × 8″ wood or plastic form. It is affixed at the end of a 30″ to 40″ wooden or plastic pole, and connected to the remainder of the metal detector circuit through a coaxial cable.

57
Metronomes

The sources of the following circuits are contained in the Sources section beginning on page 694. The figure number contained in the box of each circuit correlates to the source entry in the Sources section.

Simple Metronome
Metronome I
Ac-Line Operated Unijunction Metronome
Metronome II

SIMPLE METRONOME

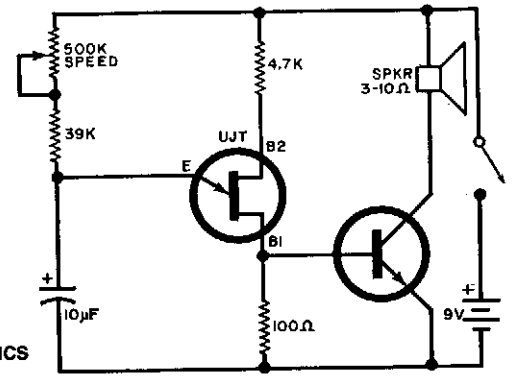

POPULAR ELECTRONICS

Fig. 57-1

Circuit Notes

Adjustable from 15 to 240 beats per minute. The UJT oscillator output is applied to a general purpose npn transistor which drives the speaker.

UJT = 2N4871
NPNxistor = TIP31

METRONOME I

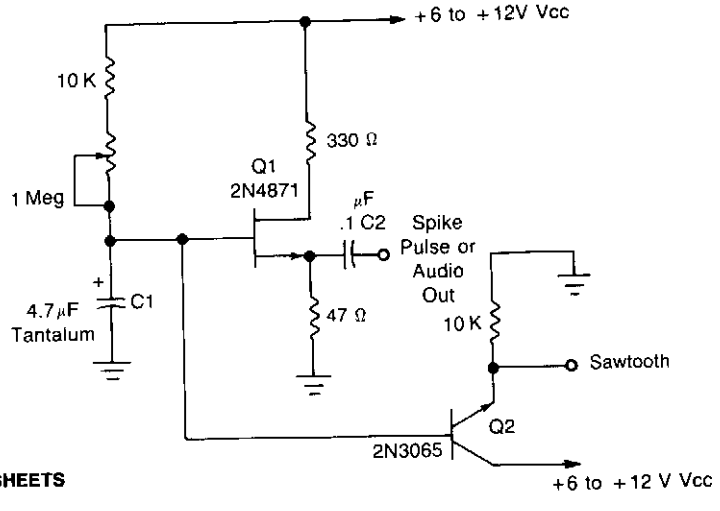

WILLIAM SHEETS

Fig. 57-2

Circuit Notes

This simple oscillator uses a 2N4871 UJT to give pulses from 0.2 to about 20 Hz. A spike is available at C2, a sawtooth at the emitter of Q2 of about 2-3 V p-p, depending on V_{CC}.

AC-LINE OPERATED UNIJUNCTION METRONOME

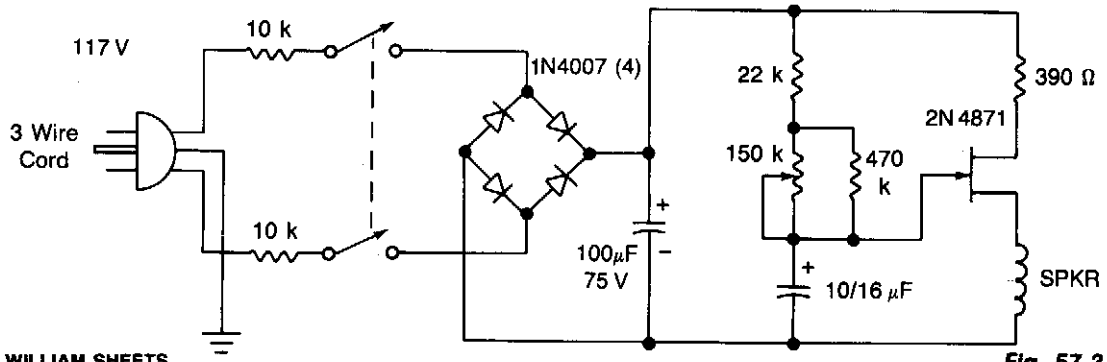

WILLIAM SHEETS

Fig. 57-3

Circuit Notes

The UJT-oscillator frequency is determined by the 100 μF capacitor and the effective resistance of the 22 K and 470 K resistors and the potentiometer. Rate can be varied from 42 to 208 beats/minute. The circuit should be housed in an insulated box for safety, or use ground (3-wire cord).

METRONOME II

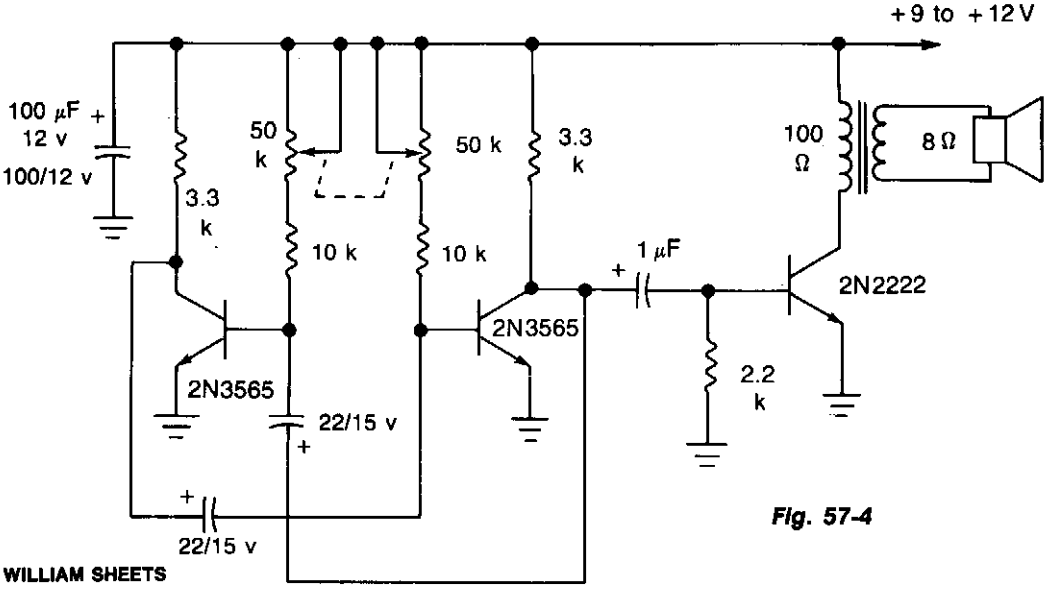

WILLIAM SHEETS

Fig. 57-4

Circuit Notes

This simple circuit uses a multivibrator to generate the beats and a subsequent audio amplifier stage to increase the output level. Range of adjustment is approximately from 40 to 200 beats per minute set by the gauged potentiometer.

58
Miscellaneous Treasures

The sources of the following circuits are contained in the Sources section beginning on page 694. The figure number contained in the box of each circuit correlates to the source entry in the Sources section.

Squib-Firing Circuit (I)
Squib-Firing Circuit (II)
Model Rocket Launcher
Push-On/Push Off Electronic Switch
Game Feeder Controller
Single LED Can Indicate Four Logic States
Inexpensive Radio-Control Uses Only SCR
Guitar and Bass Tuner
4-Channel Commutator
Two-Wire Tone Encoder
Differential Hold
5 MHz Phase-Encoded Data Read Circuitry
Shift Register
Power-On Reset
Noise Immune 60 Hz Line Sync
DC Static Switch (SCR Flip-Flop)

SQUIB-FIRING CIRCUIT (I)

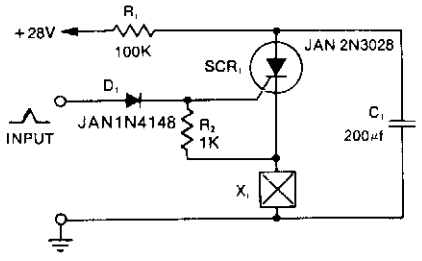

UNITRODE CORP.

Fig. 58-1

Circuit Notes

Capacitor C1 is charged to +28 V through R1 and stores energy for firing the squib. A positive pulse of 1 mA applied to the gate of SCR1 will cause it to conduct, discharging C1 into the squib load X1. With the load in the cathode circuit, the cathode rises immediately to +28 V as soon as the SCR is triggered on. Diode D1 decouples the gate from the gate trigger source, allowing the gate to rise in potential along with the cathode so that the negative gate-to-cathode voltage rating is not exceeded. This circuit will reset itself after test firing, since the available current through R1 is less than the holding current of the SCR. After C1 has been discharged, the SCR automatically turns off—allowing C1 to recharge.

SQUIB-FIRING CIRCUIT (II)

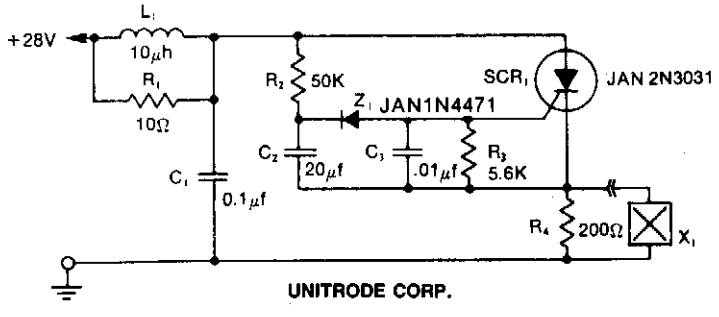

UNITRODE CORP.

Fig. 58-2

Circuit Notes

The LRC input network limits the anode dv/dt to a safe value—below 30 V/μs. R1 provides critical damping to prevent voltage overshoot. While a simple RC filter section could be used, the high current required by the squib would dictate a small value of resistance and a much larger capacitor. Resistor R3 provides dc bias stabilization, while C3 provides stiff gate bias during the transient interval when anode voltage is applied. The SCR is fired one second after arming by means of the simple R2C2Z1 time delay network. R4 provides a load for the SCR for testing the circuit with the squib disconnected—limiting the current to a level well within the continuous rating of the SCR. The circuit can be reset by opening the +28 V supply and then re-arming.

MODEL ROCKET LAUNCHER

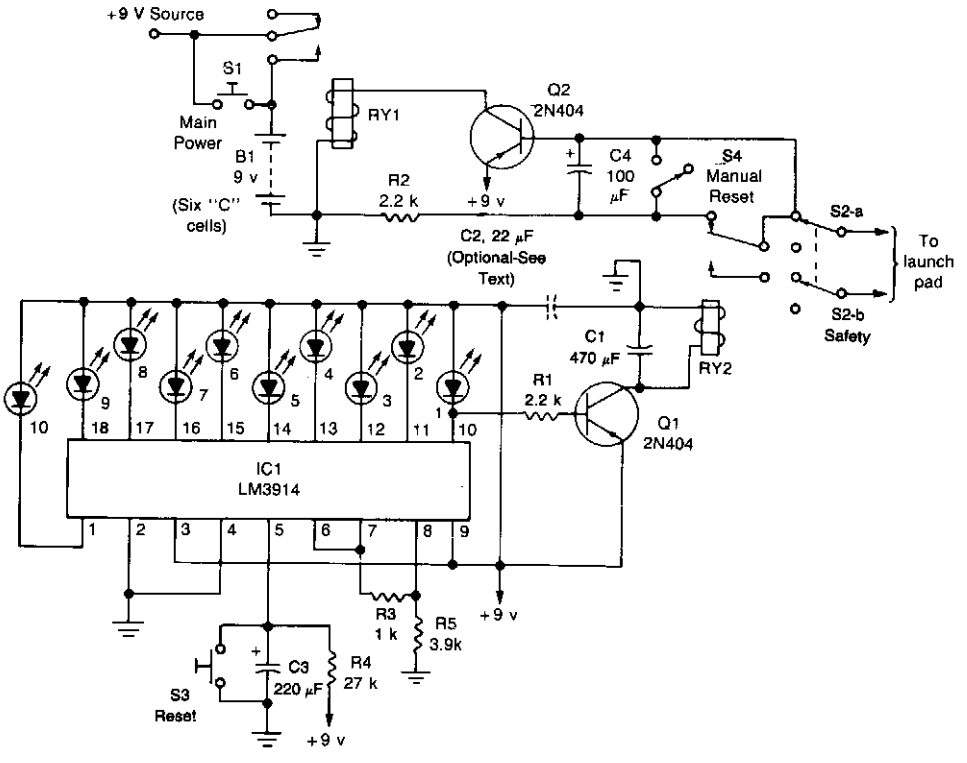

RADIO ELECTRONICS

Fig. 58-3

Circuit Notes

The circuit consists of the launch timer itself and an automatic-off timer. When power is applied to that IC, the countdown LED's sequence is on until they are all lit. When the last one LED1, is fully lit, transistor Q1 saturates, energizing RY2. When that happens, a circuit between the lantern battery at the launch pad and the nickel-chromium wire is completed; the wire heats up as before, and the rocket is launched. Resistor R4 and capacitor C3 determine the countdown timing; with the values shown it should be approximately 10 seconds. Resistors R3 and R5 set the LED brightness. Safety is of the utmost importance. That's the purpose of the second half of the circuit. When RY2 opens, the current flow to Q2 is disrupted. But, because of the presence of R2 and C4, the transistor remains saturated for about 3 seconds. After that, however, the transistor stops conducting and RY1 is de-energized. That cuts off the power to the rest of the circuit, and RY2 de-energizes again, breaking the circuit to the launch pad. Switch S3 is used to reset the countdown. Once that is done, pressing S1 starts the launch sequence; the rest is automatic. Switch S4 is used to latch RY1 manually if needed.

PUSH-ON/PUSH-OFF ELECTRONIC SWITCH

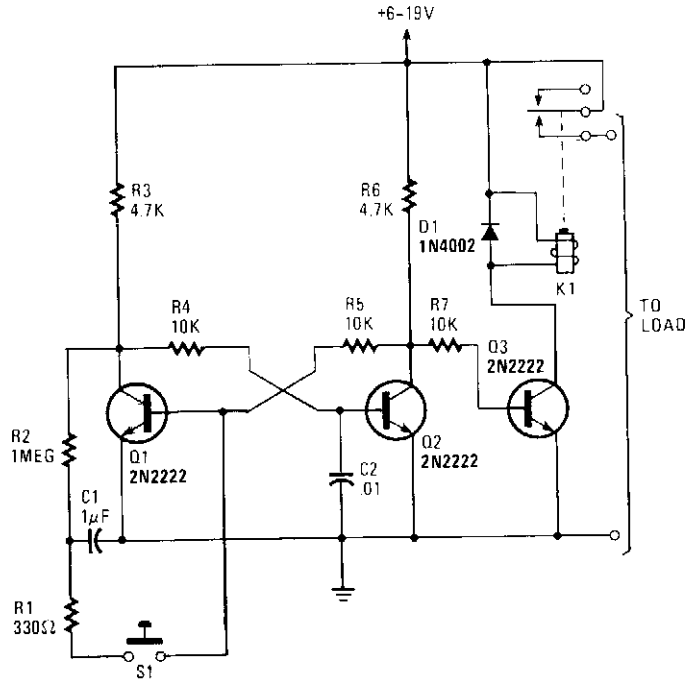

HANDS-ON ELECTRONICS

Fig. 58-4

Circuit Notes

Transistors Q1 and Q2 make up the flip-flop while Q3 drives a reed relay. When power is first applied to the circuit, Q1 and Q3 are conducting and Q2 is cut off. Momentarily closing S1 causes the flip-flop to switch states—Q1 cuts off and Q2 conducts. When Q2 is conducting, its collector drops to around 0.6 volt. That prevents base current from flowing into Q3 so it is cut off, de-energizing relay K1. The flip-flop changes state every time S1 is pressed. Capacitors C1 and C2 ensure that Q1 is always the transistor that turns on when power is first applied to the circuit. When power is first applied to the basic flip-flop, the initial status is random—Q1 and Q2 both try to conduct and, usually, the transistor with the higher gain will take control, reaching full conduction and cutting off the other one. However, differences in the values of the collector and coupling resistors will also influence the initial state at power-on. With C2 in the circuit, it and R4 form an R-C network that slightly delays the rise in Q2's base voltage. That gives Q1 sufficient time to reach saturation and thus take control.

GAME FEEDER CONTROLLER

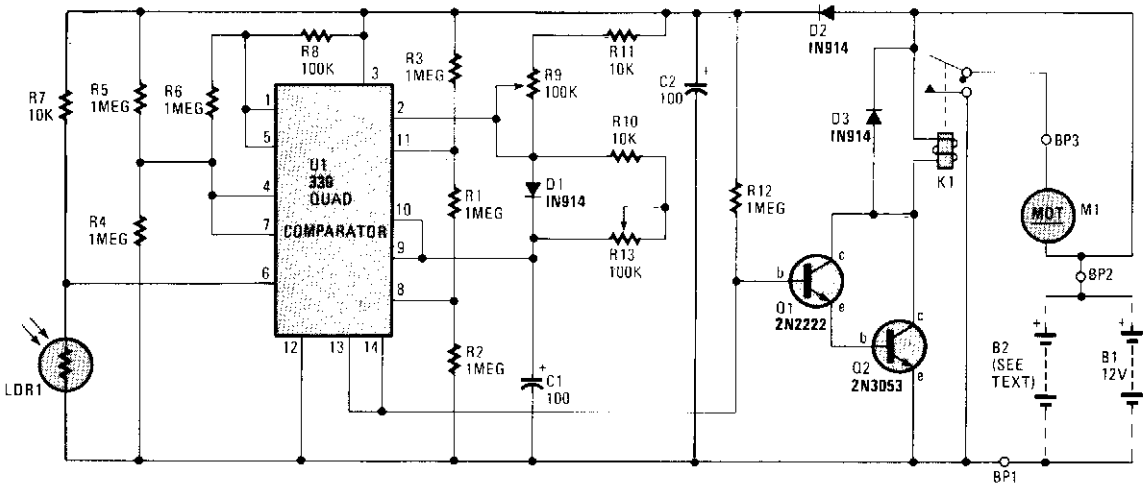

HANDS-ON ELECTRONICS

Fig. 58-5

Circuit Notes

The circuit is built around an LM339 quad comparator, U1, which forms the basis of a Schmitt trigger, timer circuit, and a window comparator. One comparator within the LM339 (pins 1, 7, 6), plus LDR1, R4, R5, R6 and R8, is used as a Schmitt trigger. The timer circuit (which receives its input from the Schmitt trigger) consists of R9, R10, R11, R13. The last two-fourth's of U1 (pins 8, 9, 10, 11, 13 and 14) are wired as a window comparator. The two inputs to the window comparator are derived from the charge on capacitor C1—which is fed to pins 9 and 10 of U1. The other inputs are picked from two points along a voltage-divider network, consisting of R1, R2, and R3. Diode D1 is used as a blocking diode, forcing capacitor C1 to discharge through R10 and R13. The window comparator looks for any voltage falling between one-third and two-thirds of the supply voltage. When the voltage falls between those two points, the output of the window comparator (pins 13/14) goes high. Transistors Q1, and Q2 are turned on, when the pins 13/14 junction goes high, energizing the relay, K1. The energized relay provides a dc path to ground, activating the motor, M1, which reloads the feeder. The timer circuit also provides immunity from triggering, due to lightning. The on-time of relay K1 is determined by the charge cycle of C1, R11, and R9 or the discharge cycle of C1, R10, and R13. Changing the value of either a resistor or the capacitor, changes the timing cycle.

SINGLE LED CAN INDICATE FOUR LOGIC STATES

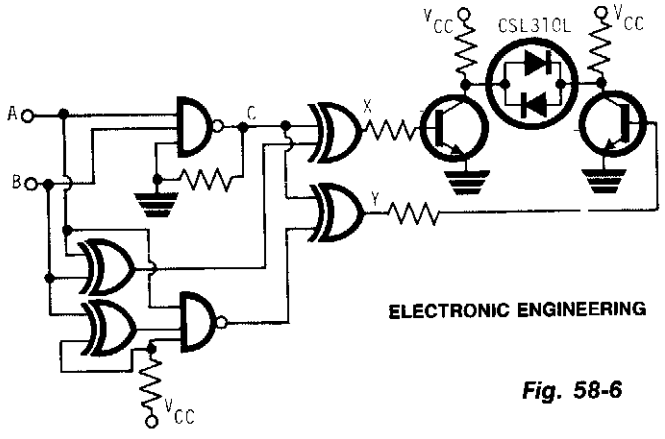

ELECTRONIC ENGINEERING

Fig. 58-6

Circuit Notes

The LED is the CSL310L which contains a red LED and a green LED connected back to back and mounted close together in a single moulding. The LED can emit red or green light by controlling the polarity of the applied voltage and if the polarity is switched at a rate of several hundred Hertz the emitted light appears yellow. The four combinations of inputs A and B can therefore be converted to four LED states—red, green, yellow and off. The truth table shows the LED colors corresponding to the combinations of A and B levels.

Truth Table

A	B	X	Y	LED color
0	0	1	0	red
0	1	0	0	off
1	0	0	1	green
1	1	C	C	yellow

INEXPENSIVE RADIO-CONTROL USES ONLY ONE SCR

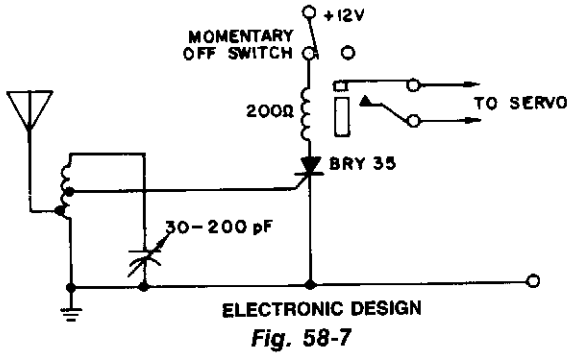

ELECTRONIC DESIGN

Fig. 58-7

Circuit Notes

A simple and effective receiver for actuating garage doors, alarms, warning systems, etc. The SCR, which has a very low trigger current 30 μA is typical—it requires an input power of only 30 μW to activate the relay. A high Q tuned antenna circuit assures rejection of spurious signals. A whip or wire antenna is adequate up to 100 feet from a low power transistor transmitter. A momentary-off switch resets the circuit.

GUITAR AND BASS TUNER

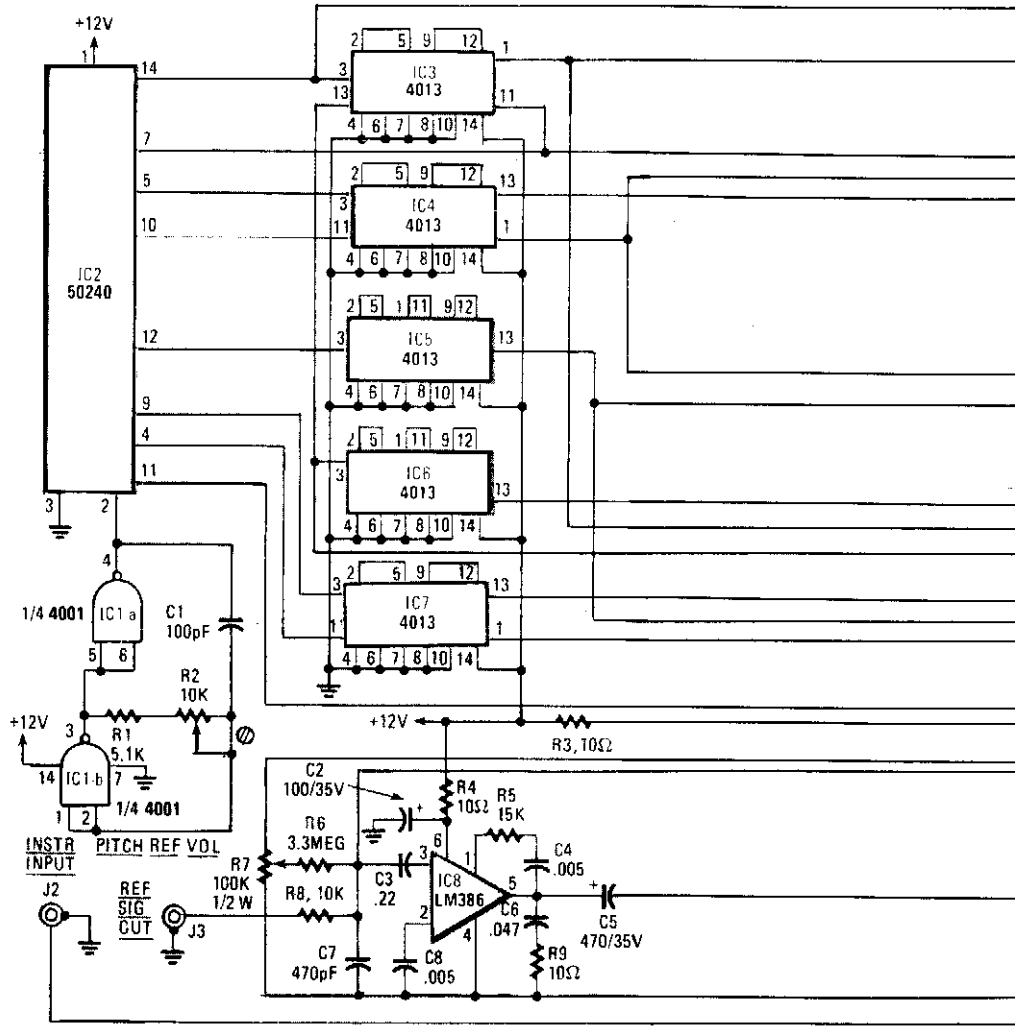

RADIO-ELECTRONICS

Fig. 58-8

Circuit Notes

The heart of the circuit is IC2, a 50240 top-octave generator. That device uses a single input-frequency to generate all twelve notes of the musical scale. The input signal is provided by IC1, a 4001 quad 2-input NOR gate. Two sections of that IC are used to form an oscillator that runs at approximately 2 MHz. The frequency can be adjusted by trimmer potentiometer R2. Dual D flip-flops, IC3-IC7, are used as frequency dividers. They divide down the upper-octave frequencies from IC2, thus generating the lower-frequency notes required for the pitch references. The chords for the bass pitch-references are composed of three notes each. Those notes are taken from various outputs

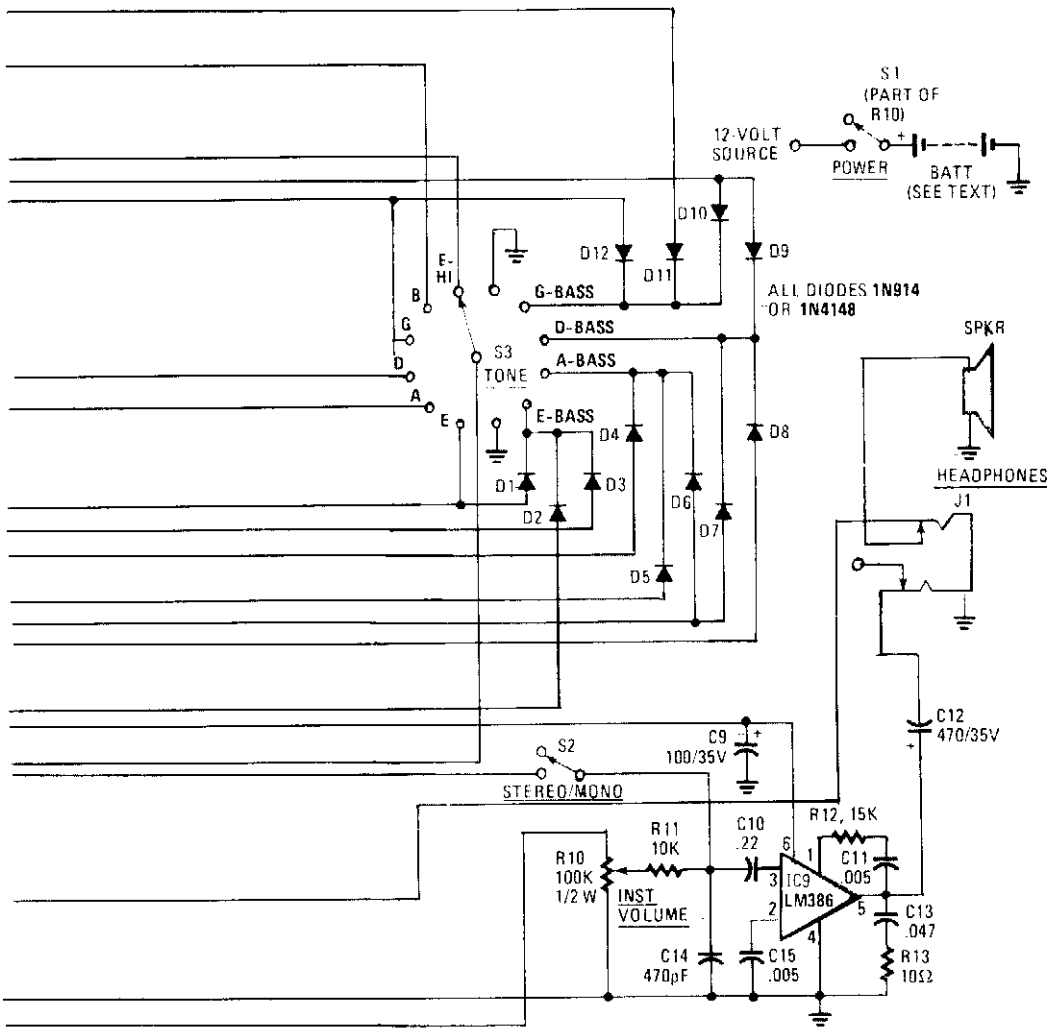

of IC2-IC7 through isolation diodes D1-D12. All signals are routed to the TONE switch, S3. The wiper arm of that switch is connected through R7 to the input of audio power-amplifier IC8, an LM386. The resistor acts as a volume control for the pitch reference. Another LM386, IC9, serves as an amplifier for the instrument being tuned, with R10 acting as its volume control. The outputs of IC8 and IC9 are coupled, through C5 and C12 respectively, to the headphone jack, J1. Switch S2 STEREO/MONO is used to mix the reference and instrument signals at IC9 for mono operation. Power is supplied by eight "AA" cells connected in series.

4-CHANNEL COMMUTATOR

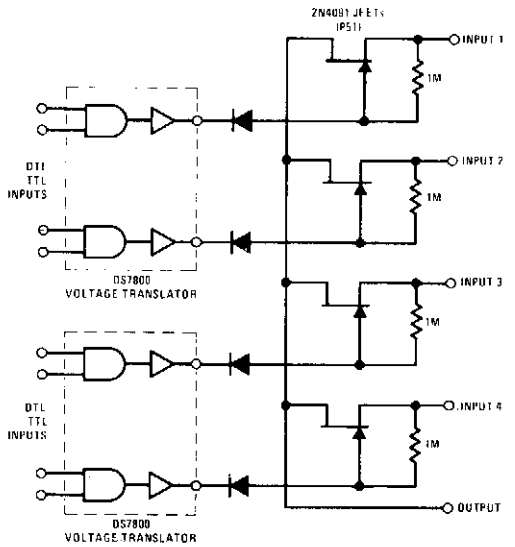

NATIONAL SEMICONDUCTOR CORP.

Circuit Notes

This 4-channel commutator used the 2N4091 to achieve low channel on resistance (<30 ohm) and low off current leakage. The DS7800 voltage translator is a monolithic device that provides from 10 V to −20 V gate drive to the JFETs while at the same time providing DTL/TTL logic compatibility.

Fig. 58-9

TWO-WIRE TONE ENCODER

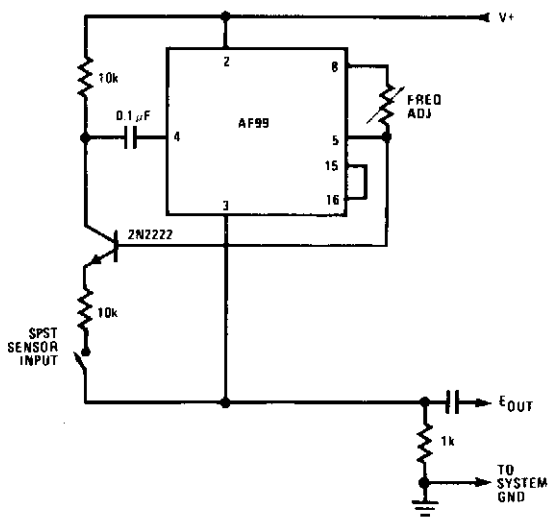

Fig. 58-10

NATIONAL SEMICONDUCTOR CORP.

DIFFERENTIAL HOLD

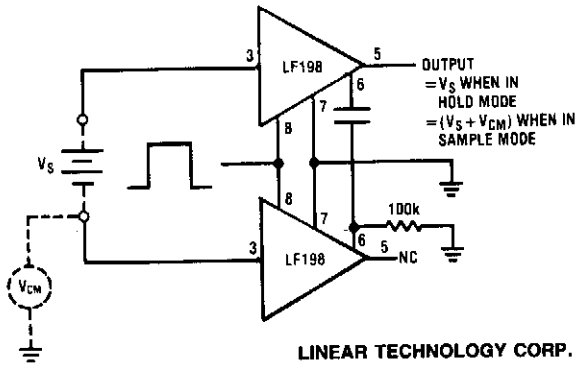

Fig. 58-11

LINEAR TECHNOLOGY CORP.

5 MHz PHASE—ENCODED DATA READ CIRCUITRY

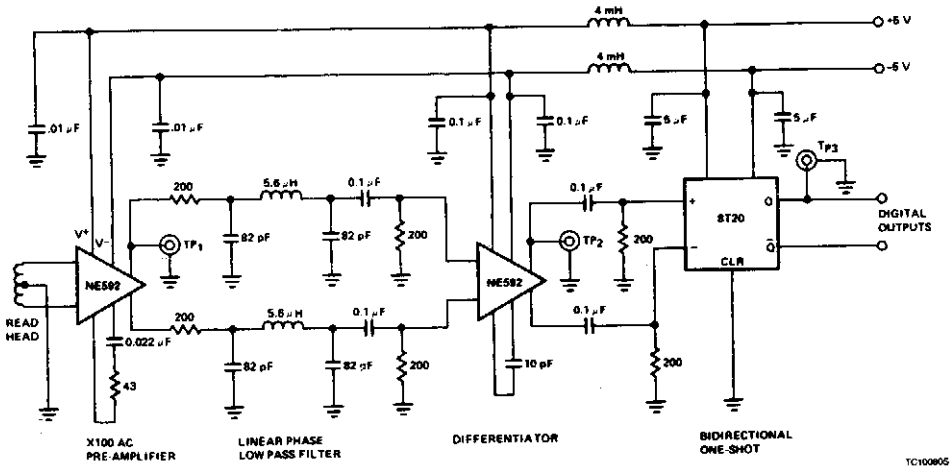

NOTE:
All resistor values are in ohms

SIGNETICS

Fig. 58-12

Circuit Notes

Readback data is applied directly to the input of the first NE592. This amplifier functions as a wide-band ac coupled amplifier with a gain of 100. By direct coupling of the readback head to the amplifier, no matched terminating resistors are required and the excellent common-mode rejection ratio of the amplifier is preserved. The dc components are also rejected because the NE592 has no gain at dc due to the capacitance across the gain select terminals. The output of the first stage amplifier is routed to a linear phase shift low-pass filter, with a characteristic impedance of 200 ohms. The second NE592 is utilized as a low noise differentiator/amplifier stage. The output of the differentiator/amplifier is connected to the 8T20 bidirectional monostable unit to provide the proper pulses at the zero-crossing points of the differentiator.

SHIFT REGISTER

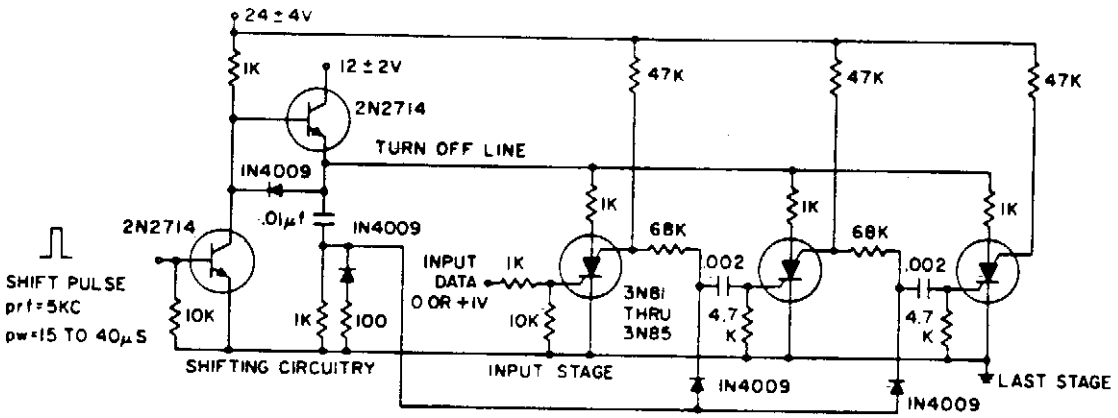

GENERAL ELECTRIC

Fig. 58-13

Circuit Notes

The shift pulse amplitude is less than 15 volts. If a stage is off, the shift pulse will not be coupled to the next stage. If it is on, the diode will conduct triggering the next stage. Just prior to the shift pulse the anode supply is interrupted to turn off all stages. The stored capacitor charge determines which stages will be retriggered.

POWER-ON RESET

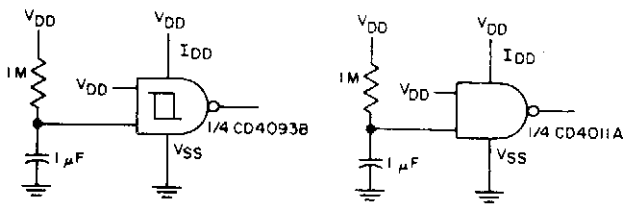

RCA

Fig. 58-14

Circuit Notes

A reset pulse is often required at power-on in a digital system. This type of reset pulse is ideally provided by this circuit. Because of the high input impedance of the Schmitt trigger, long reset pulse times may be achieved without the excess dissipation that results when both output devices are on simultaneously, as in an ordinary gate device (B).

NOISE IMMUNE 60 Hz LINE SYNC

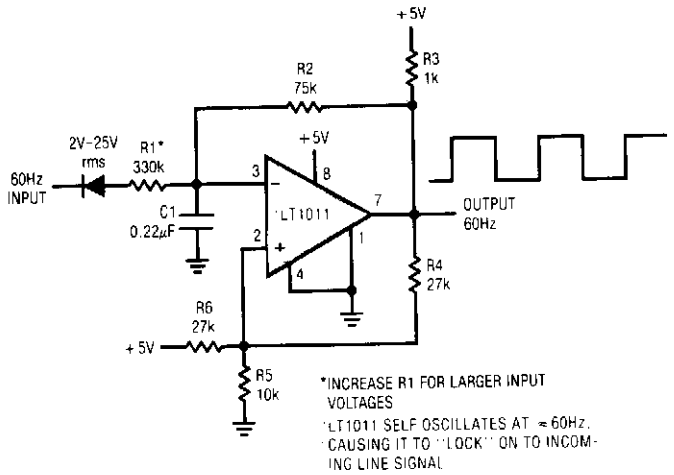

LINEAR TECHNOLOGY CORP.

Fig. 58-15

DC STATIC SWITCH (SCR FIIP-FLOP)

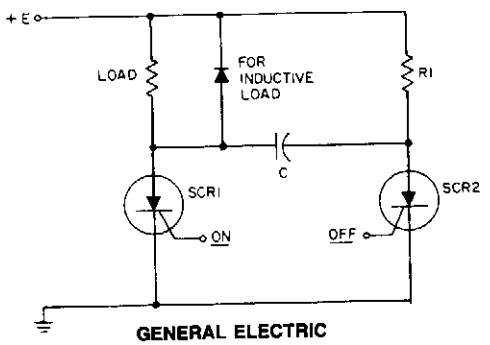

GENERAL ELECTRIC

Fig. 58-16

Circuit Notes

This circuit is a static SCR switch for use in a dc circuit. When a low power signal is applied to the gate of SCR1, this SCR is triggered and voltage is applied to the load. The right hand plate of C charges positively with respect to the left hand plate through R1. When SCR2 is triggered on, capacitor C is connected across SCR1, so that this SCR is momentarily reverse biased between anode and cathode. This reverse voltage turns SCR1 off provided the gate signal is not applied simultaneously to both gates. The current through the load will decrease to zero in an exponential fashion as C becomes charged.

59

Modulator Circuits

The sources of the following circuits are contained in the Sources section beginning on page 694. The figure number contained in the box of each circuit correlates to the source entry in the Sources section.

Double Sideband, Suppressed Carrier RF Modulator
Low-Distortion Low Level Amplitude Modulator
Video Modulator Circuit
Video Modulator
TTL Oscillator Interfaces Data for Display by a Television Set

DOUBLE SIDEBAND, SUPPRESSED CARRIER RF MODULATOR

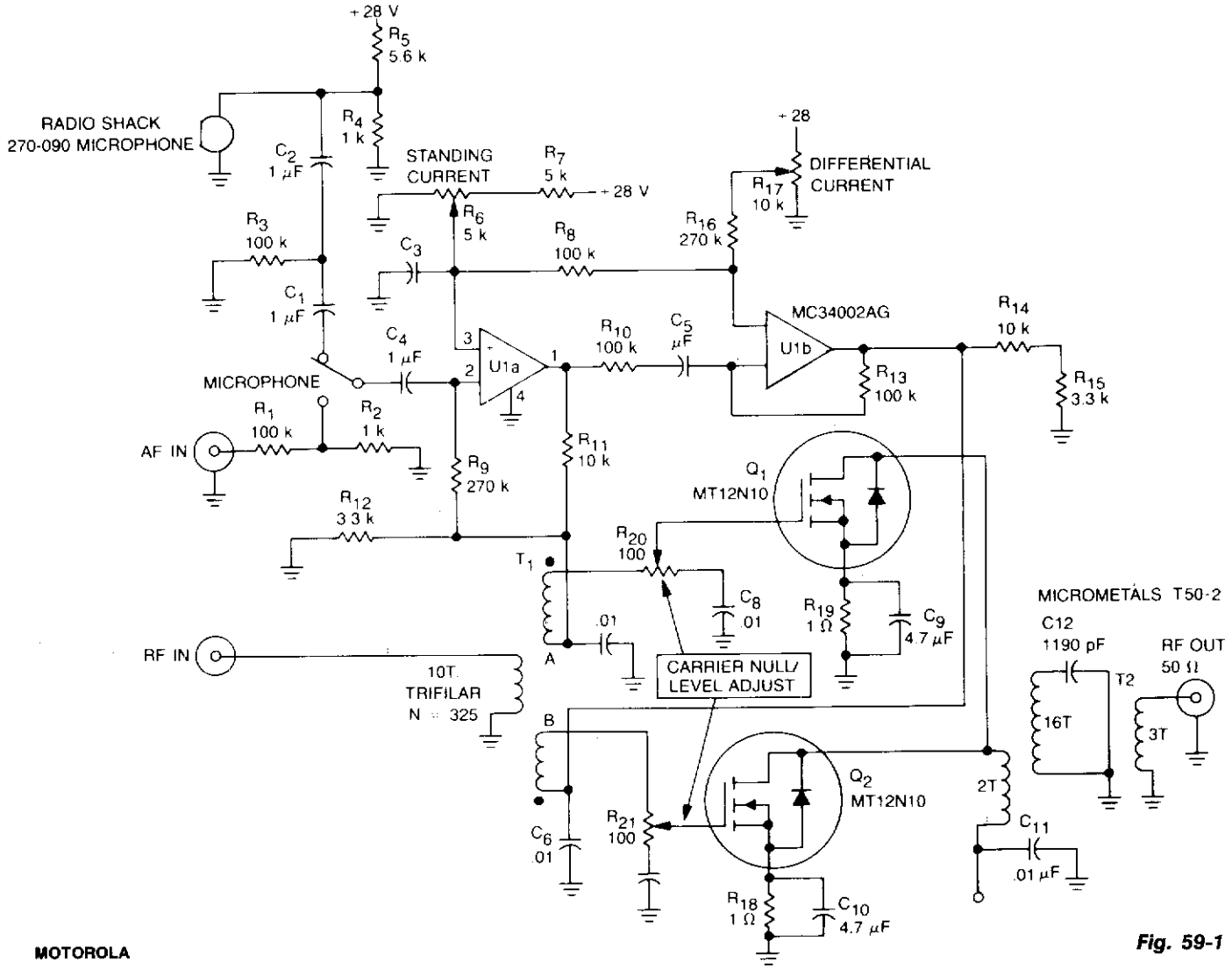

Fig. 59-1

DOUBLE SIDEBAND, SUPPRESSED CARRIER RF MODULATOR , Continued.

Circuit Notes

An RF input is applied to the primary of T1, which applies equal amplitude, opposite phase RF drive for output FETs Q1 and Q2. With no AF modulation at points A and B, the opposite phase RF signals cancel each other and no output appears at the 50 V output connector.

When AF modulation is applied to points A and B, a modulated RF output is obtained. The dc stability and low frequency gain are improved by source resistors R18 and R19.

A phase inverter consisting of a dual op amp (U1a and U1b) produces the out-of-phase, equal amplitude AF modulation signals.

LOW-DISTORTION LOW-LEVEL AMPLITUDE MODULATOR

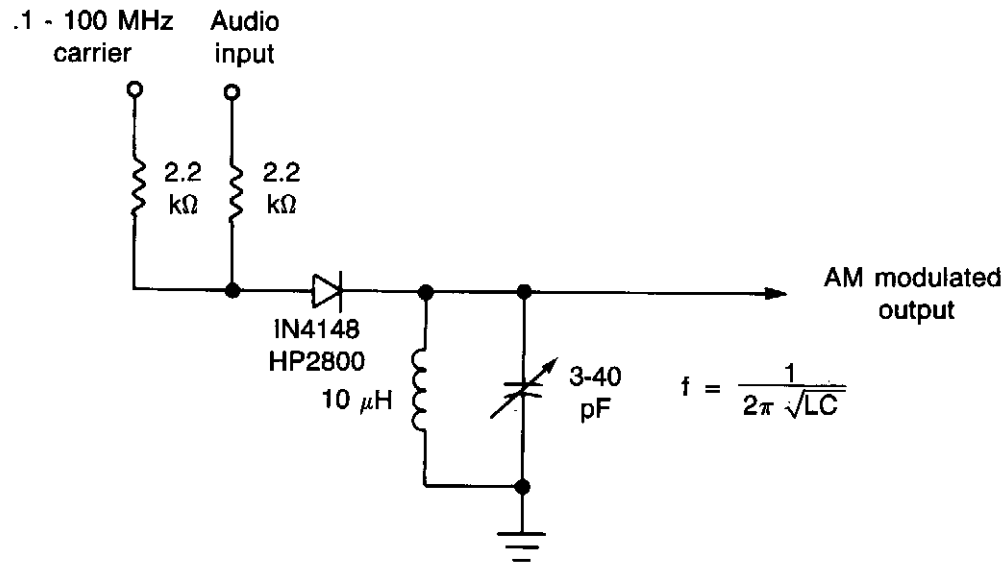

WILLIAM SHEETS

Fig. 59-2

Circuit Notes

This simple diode modulator delivers excellent results when used for high percentage modulation at low signal levels. Constants are shown for a carrier frequency of about 10 MHz, but, with a suitable tank, the circuit will give good results at any frequency at which the diode approximates a good switch. To extend frequency above that for which the IN4148 is suited, a hot-carrier diode (HP2800, etc.) can be substituted. A shunt resistor across the tank circuit can be used to reduce the circuit Q so as to permit high percentage modulation without appreciable distortion.

VIDEO MODULATOR CIRCUIT

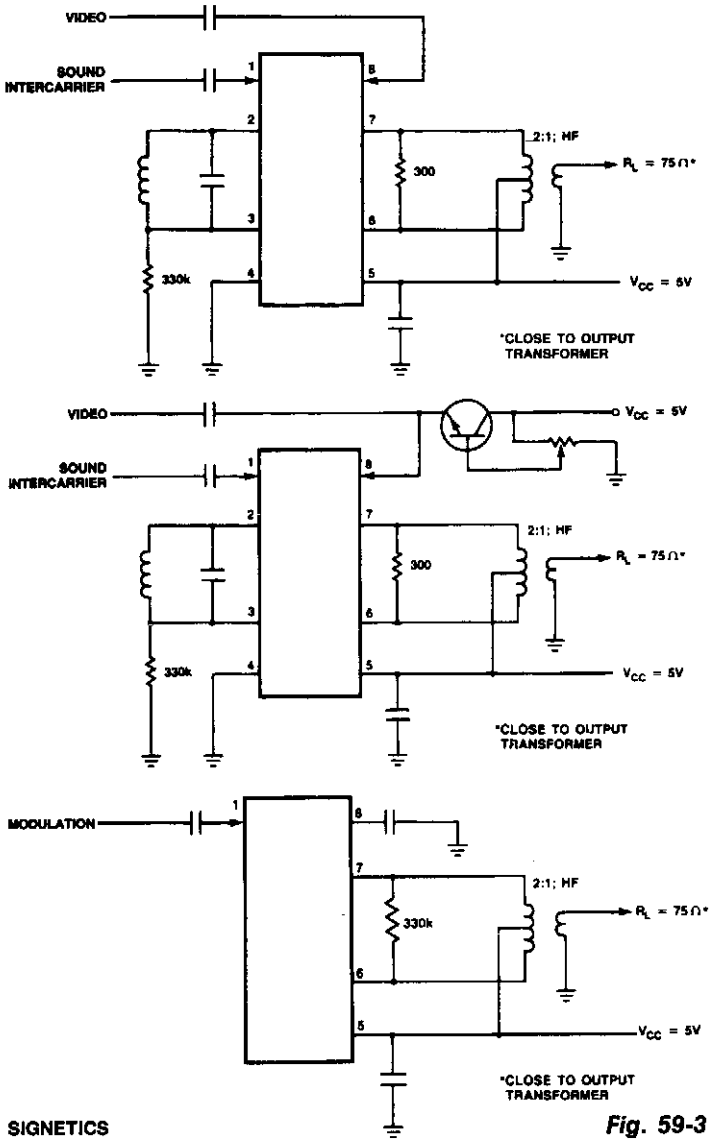

SIGNETICS

Fig. 59-3

Circuit Notes

These are modulator circuits for modulation of video signals on a VHF/UHF carrier. The circuits require a 5 V power supply and few external components for the negative modulation mode. For positive modulation an external clamp circuit is required. The circuits can be used as general-purpose modulators without additional external components. The IC is TDA6800.

VIDEO MODULATOR

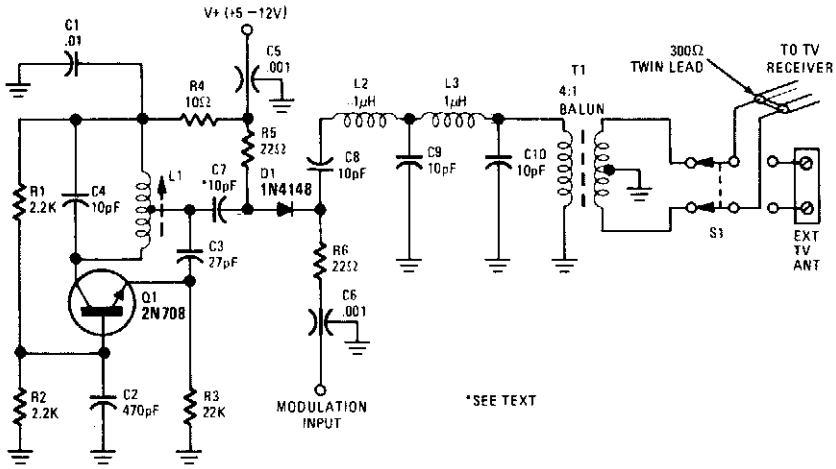

RADIO-ELECTRONICS

Fig. 59-4

Circuit Notes

This circuit permits direct connection of composite video signals from video games and microcomputers to the antenna terminals of TV sets. The output signal level is controlled by the modulation input.

TTL OSCILLATOR INTERFACES DATA FOR DISPLAY BY A TELEVISION SET

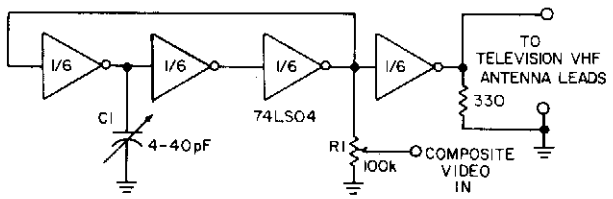

ELECTRONIC DESIGN

Fig. 59-5

Circuit Notes

Three gates of a 74LS04 form the oscillator circuit. Capacitor C1 allows fine-frequency adjustment to a specific television channel and helps stabilize the circuit. Potentiometer R1 acts as the mixing input and provides adjustment of the contrast ratio for the best viewing. A fourth gate buffers and helps stabilize the oscillator.

60

Motor Control Circuits

The sources of the following circuits are contained in the Sources section beginning on page 694. The figure number contained in the box of each circuit correlates to the source entry in the Sources section.

Bi-Directional Proportional Motor Control
AC Motor Control
PWM Motor Speed Control
Stepping Motor Driver
Low-Cost Speed Regulator For DC Motors
Motor Speed Control Circuit
Constant Speed Motor Control Using Tachometer Feedback
Back EMF PM Motor Speed Control
DC Motor Speed Control
Reversing Motor Drive, DC Control Signal
N-Phase Motor Drivers
Servo Motor Drive Amplifier
DC Servo Drive Employs Bipolar Control Input
400 Hz Servo Amplifier
Three-Phase Power-Factor Controller
Motor/Tachometer Speed Control
Closed Loop, Tachometer Feedback Control

BI-DIRECTIONAL PROPORTIONAL MOTOR CONTROL

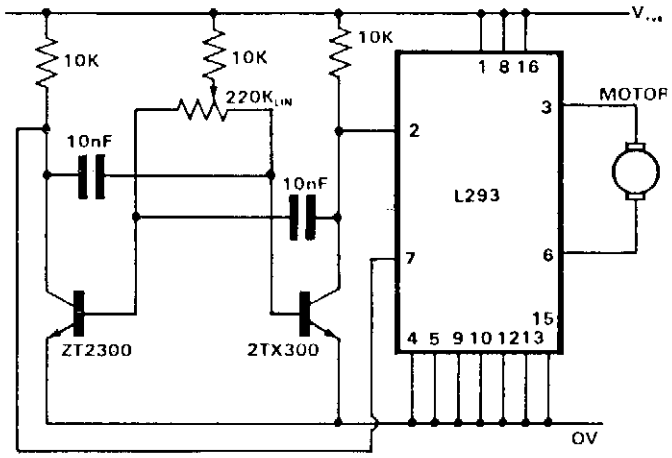

ELECTRONIC ENGINEERING *Fig. 60-1*

Circuit Notes

The control of both direction and of proportional motor speed is achieved by rotation of a single potentiometer. The motor driver is an SGS integrated circuit L293 which will drive up to 1 amp in either direction, depending on the logic state of input 1 and input 2 as per table.

I/P 1	I/P 2	Function
High	Low	Motor turns one way
Low	High	Motor reverses

By applying a variable M/S ratio flip-flop to these inputs, both speed and direction will be controlled. With RV1 in its center position the M/S will be 1:1 whereby the motor will remain stationary due to its inability to track at the flip-flop frequency. Movement of RV1 in either direction will gradually alter the M/S ratio and provide an average voltage bias in one direction proportional to the M/S ratio.

AC MOTOR CONTROL

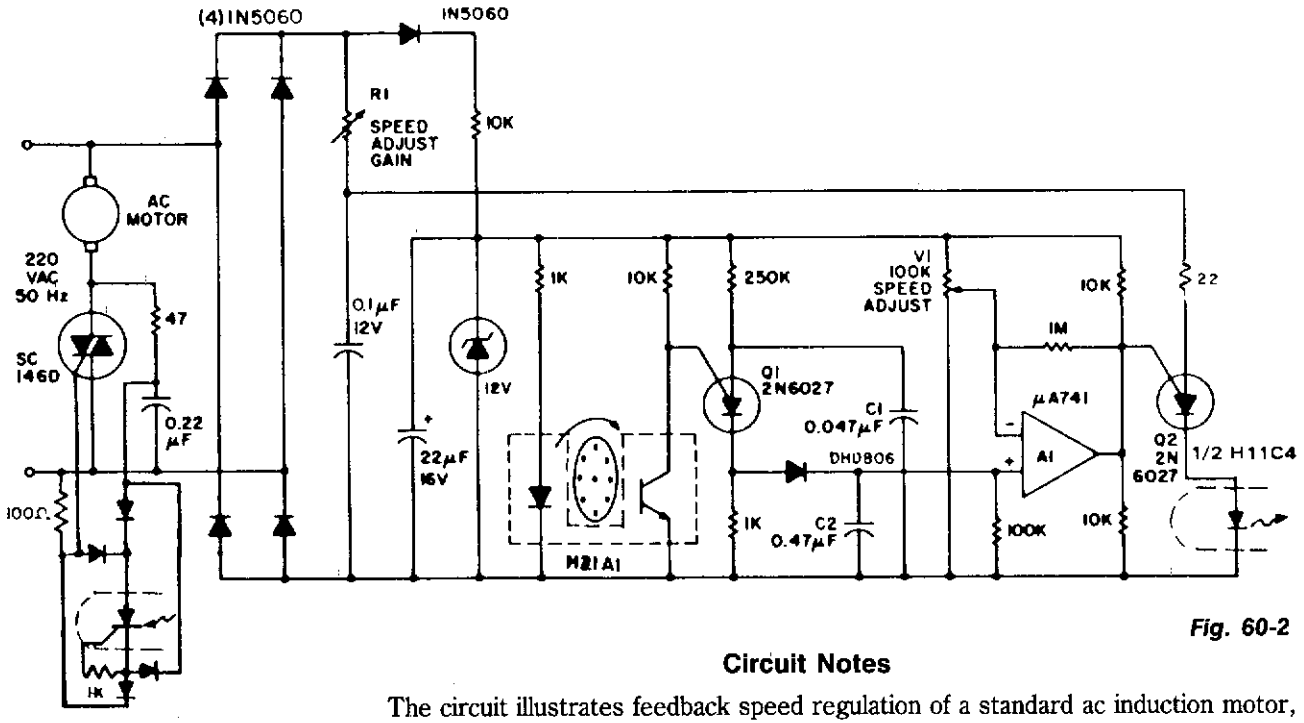

Fig. 60-2

GENERAL ELECTRIC

Circuit Notes

The circuit illustrates feedback speed regulation of a standard ac induction motor, a function difficult to accomplish other than with a costly, generator type, precision tachometer. When the apertured disc attached to the motor shaft allows the light beam to cross the interrupter module, the programmable unijunction transistor, Q1, discharges capacitor, C1, into the much larger storage capacitor, C2. The voltage on C2 is a direct function of the rotational speed of the motor. Subsequently, this speed-related potential is compared against an adjustable reference voltage, V1, through the monolithic operational amplifier, A1, whose output, in turn, establishes a dc control input to the second P.U.T. (Q2). This latter device is synchronized to the ac supply frequency and furnishes trigger pulses in the conventional manner to the triac at a phase angle determined by the speed control, R1, and by the actual speed of the motor.

PWM MOTOR SPEED CONTROL

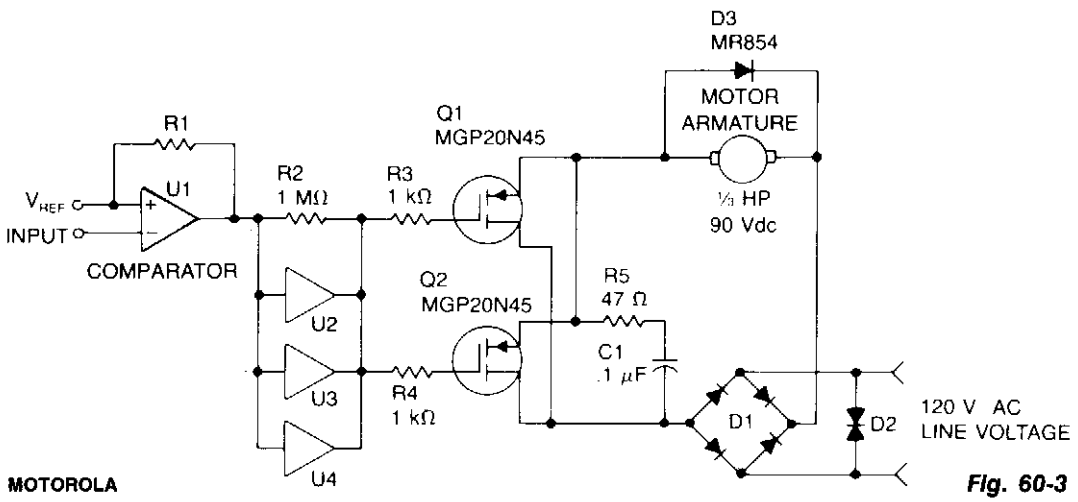

MOTOROLA

Fig. 60-3

Circuit Notes

Speed control is accomplished by pulse width modulating the gates of two MGP20N45 TMOS devices. Therefore, motor speed is proportional to the pulse width of the incoming digital signal, which can be generated by a microprocessor or digital logic.

The incoming signal is applied to comparator U1, then to paralleled inverters U2, U3, and U4 that drive the two TMOS devices, which, in turn, control power applied to the motor armature. Bridge rectifier D1 supplies fullwave power that is filtered by R5 and C1. Free-wheeling diode D3 (MR854) prevents high voltage across Q1 and Q2. A back-to-back zener diode, D2, protects against transients and high voltage surges.

STEPPING MOTOR DRIVER

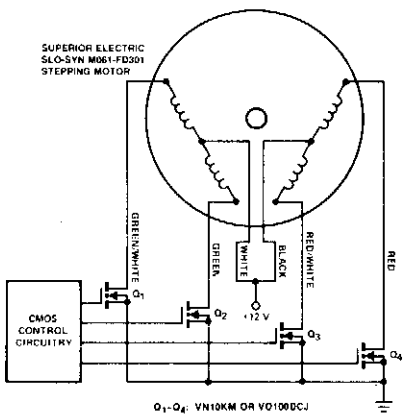

SILCONIX, INC.

Fig. 60-4

Circuit Notes

Stepping motors find wide use in disk drives and machine control. MOSPOWER transistors are ideal motor drivers because of their freedom from second breakdown. Note that snubbing networks are not used because load line shaping is not necessary with MOSPOWER and the inductance of the motor is fairly low so that the inductive spike is small. The MOSFET gates are tied directly to the outputs of the CMOS control circuitry. The logic is arranged to sequence the motor in accordance with the needs of the application.

LOW-COST SPEED REGULATOR FOR DC MOTORS

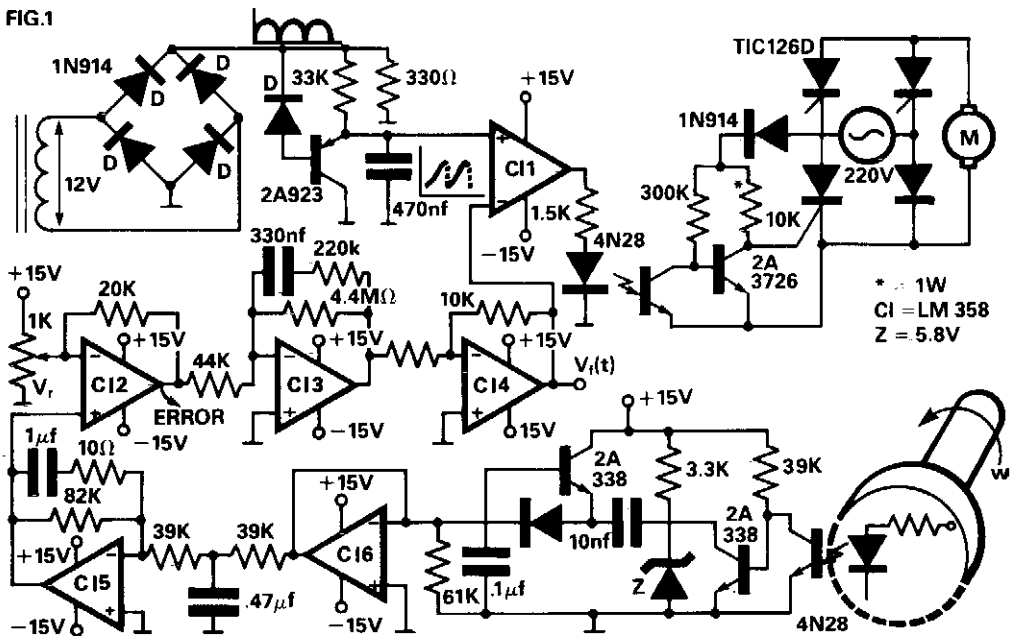

ELECTRONIC ENGINEERING

Fig. 60-5

Circuit Notes

A four thyristor controlled bridge is used for operation in two quadrants of the torque-speed characteristics. In the trigger circuits the usual pulse transformers were replaced by self-biased circuits which minimize gate power consumption and increase noise immunity. Electrical isolation is guaranteed by the use of optocouplers. The trigger pulses are generated by the comparison between an error signal, previously processed and amplified, and a line synchronism signal. The converter's output is a dc voltage proportional to the speed, which after being compared with a reference signal, becomes the error signal.

MOTOR SPEED CONTROL CIRCUIT

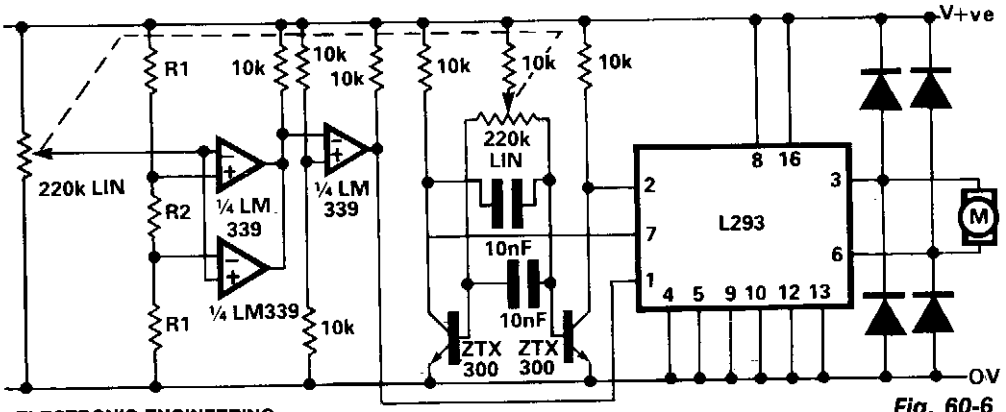

ELECTRONIC ENGINEERING

Fig. 60-6

Circuit Notes

A shortcoming of the above bi-directional proportional motor control circuit is that with the potentiometer in its center position the motor does not stop, but creeps due to the difficulty in setting the potentiometer for an exact 1:1 mark-space ratio from the flip-flop. This modified circuit uses a second potentiometer, ganged with the first used to inhibit drive to the motor near the center position. This potentiometer is connected between the supply lines and feeds a window comparator which in turn drives the inhibit input of the L293.

CONSTANT SPEED MOTOR CONTROL USING TACHOMETER FEEDBACK

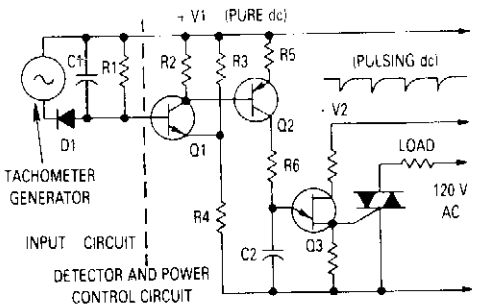

MOTOROLA

Fig. 60-7

Circuit Notes

The generator output is rectified then filtered and applied between the positive supply voltage and the base of the detector transistor. This provides a negative voltage which reduces the base-voltage when the speed increases. In normal operation, if the tachometer voltage is less than desired, the detector transistor is turned on, then turns on Q2 which causes the timing capacitor for the unijunction transistor to charge quickly. As the tachometer output approaches the voltage desired, the base-emitter voltage is reduced to the point at which Q1 is almost cut off. Thereby, the collector current which charges the unijunction timing capacitor is reduced, causing that capacitor to charge slowly and trigger the thyristor later in the half cycle. In this manner, the average power to the motor is reduced until just enough power to maintain the desired motor speed is allowed to flow.

BACK EMF PM MOTOR SPEED CONTROL

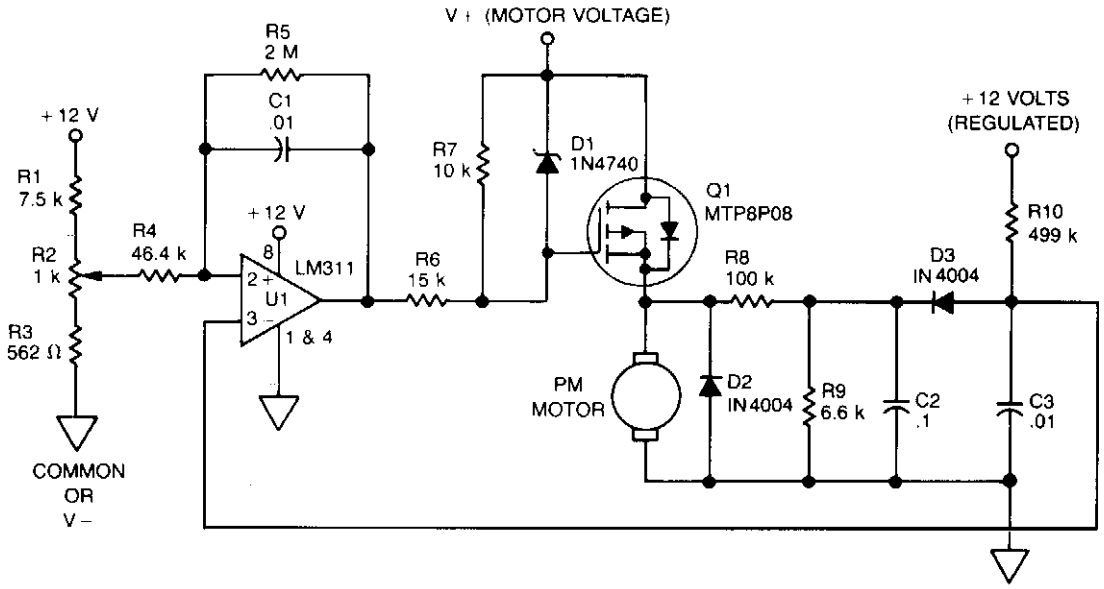

MOTOROLA

Fig. 60-8

Circuit Notes

The use of power MOSFETs allows a direct interface between logic and motor power, which permits circuit simplicity as well as high efficiency. This speed control circuit can be packaged on a 22-pin, double-sided, 3.5 × 4-in. pc board.

A 12 V control supply and a TRW BL11, 30 V motor are used; with minor changes other motor and control voltages can be accommodated. For example, a single 24 V rail could supply both control and motor voltages. Motor and control voltages are kept separate here because CMOS logic is used to start, stop, reverse and oscillate the motor with a variable delay between motor reversals.

Motor speed is established by potentiometer R2, which applies a corresponding dc voltage to the + input of comparator U1, whose output is then applied to TMOS device MTP8P08 (Q1). Zener diode D1 limits the drive to Q1. The output of Q1 drives the permanent magnet motor.

Back emf is obtained from the motor via the network consisting of R8, R9, R10, C2, C3 and D3; it is applied to—input of comparator U1.

DC MOTOR SPEED CONTROL

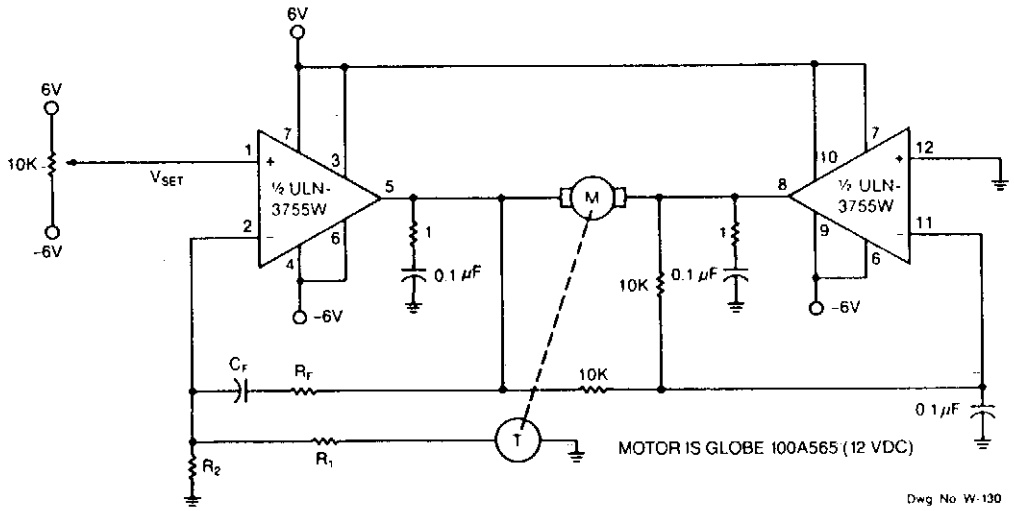

SPRAGUE ELECTRIC CO.

Fig. 60-9

Circuit Notes

Power op amps provide accurate speed control for dc motors. The circuit provides bidirectional speed control. The amplifiers' push-pull configuration ensures a full rail-to-rail voltage swing (minus the output stages' saturation drops) across the motor in either direction. The circuit uses a mechanically-coupled tachometer to provide speed-stabilizing feedback to the first amplifier section. The motor's speed and direction of rotation is set by adjusting the 10 k ohm potentiometer at the amplifier's noninverting input. The RFCF feedback network prevents oscillation by compensating for the inherent dynamic mechanical lag of the motor. Select the RFCF time constant to match the particular motor's characteristics.

REVERSING MOTOR DRIVE, DC CONTROL SIGNAL

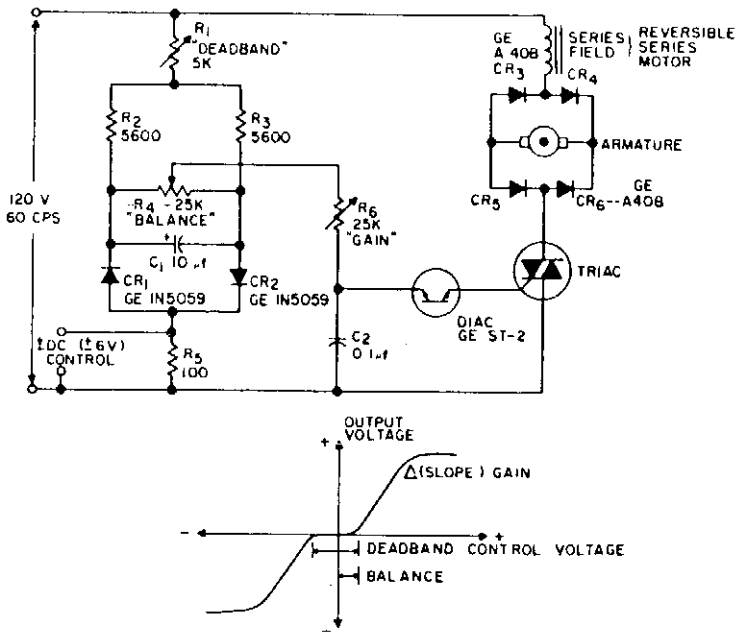

GENERAL ELECTRIC

Fig. 60-10

Circuit Notes

This is a positioning servo drive featuring adjustment of balance, gain, and deadband. In addition to control from a dc signal, mechanical input can be fed into the balance control, or that control could be replaced by a pair of resistance transducers for control by light or by temperature.

N-PHASE MOTOR DRIVERS

SINGLE-PHASE AC MOTOR DRIVER

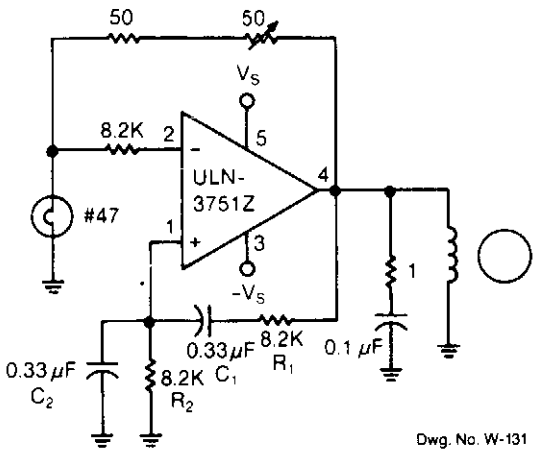

Dwg. No. W-131

TWO-PHASE AC MOTOR DRIVER

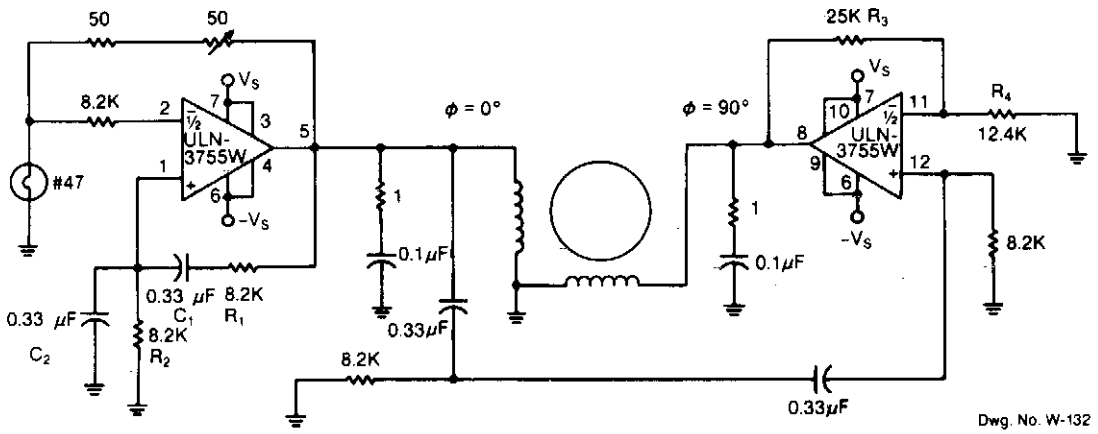

Dwg. No. W-132

SPRAGUE ELECTRIC CO.

Fig. 60-11

Circuit Notes

Because of its high amplification factor and built-in power-output stage, an integrated power operational amplifier makes a convenient driver for ac motors. One op amp can be configured as an oscillator to generate the required ac signal. The power-output stage, of course, supplies the high-current drive to the motor. The controlling op amp is

THREE-PHASE AC MOTOR DRIVER

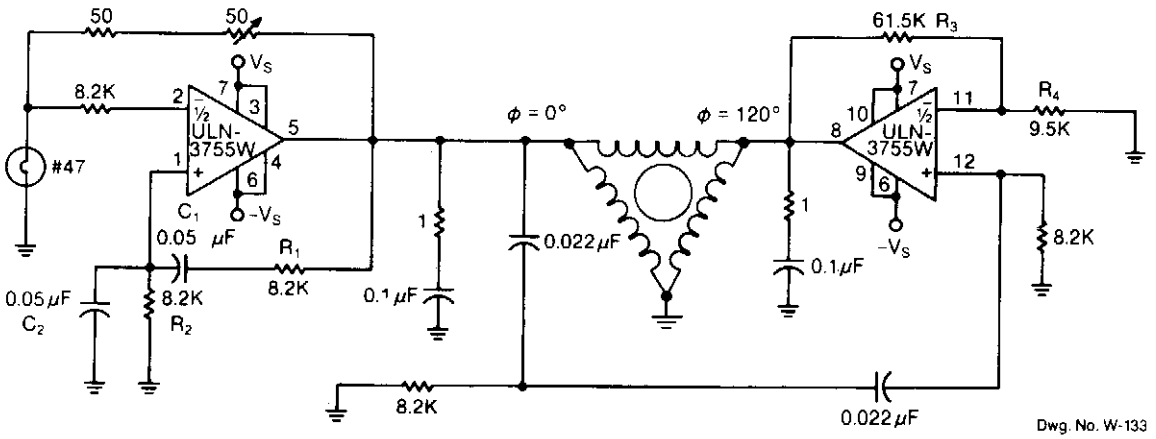

configured as a Wein bridge oscillator. The R1C1, R2C2 feedback networks determine the oscillation frequency, according to the following expression:

$$f_o = \frac{1}{(2\ \pi\sqrt{R_1R_2C_1C_2})}$$

By varying either R1 or R2, the oscillator frequency can be adjusted over a narrow range. The R3/R4 ratio sets the second amplifier's gain to compensate for signal attenuation occurring in the phase shifters. The circuits can be driven from an external source, such as a pulse or square wave, setting the gain of the left-hand amplifier to a level less than that required for oscillation. The RC feedback networks then function as an active filter causing the outputs to be sinusoidal.

SERVO MOTOR DRIVE AMPLIFIER

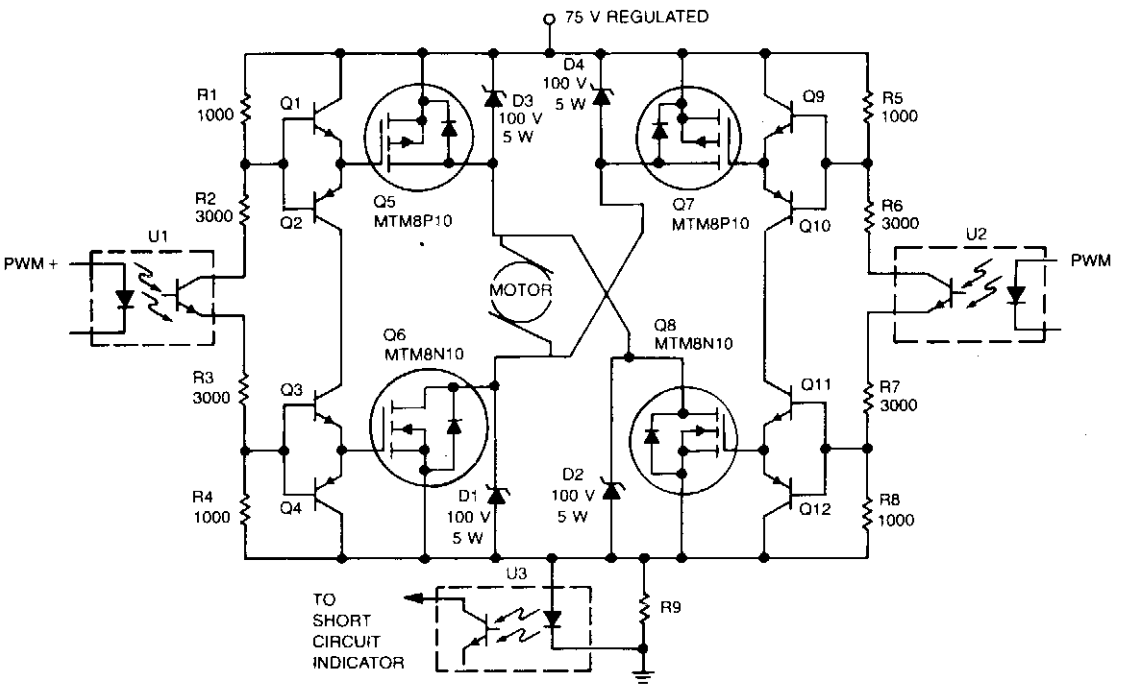

MOTOROLA

Fig. 60-12

Circuit Notes

Digital ICs and opto-isolators provide the drive for this TMOS servo amplifier, resulting in fewer analog circuits and less drift. Fast and consistent turn-on and turn-off characteristics also enable accurate analog output results directly from the digital signal without the need for analog feedback.

An "H" bridge configuration is employed for the servo amplifier, which obtains complementary PWM inputs from digital control circuits. The PWM inputs are applied via opto-isolators, which keep the digital control logic isolated from the 75 V supply used for the amplifier. A short circuit indicator is provided by opto-isolator U3; if there is a short, the drop across R9 increases to a value sufficient to activate the isolator and send a short indication to the digital control logic.

DC SERVO DRIVE EMPLOYS BIPOLAR CONTROL INPUT

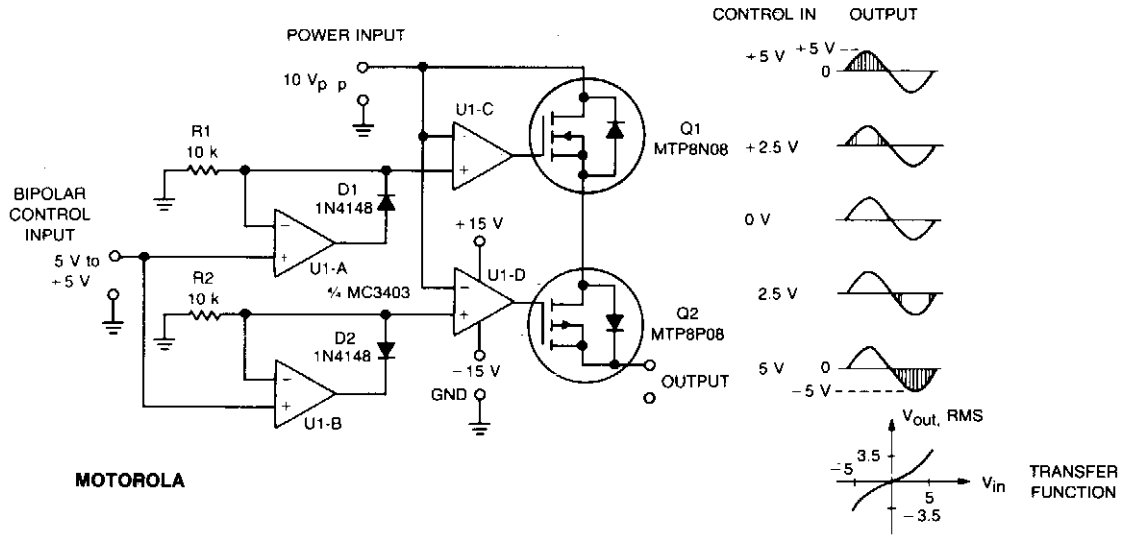

Fig. 60-13

Circuit Notes

This circuit accepts bipolar control inputs of ±5 V and provides a phase-chopped output to a dc load (such as a servo motor) of the same polarity as the input. The rms voltage of the output is closely proportional to the control input voltage.

N-channel and p-channel TMOS devices, Q1 and Q2, are connected in anti-series to form a bidirectional switch through which current can flow in either the forward or reverse direction. Control circuits turn Q1 and Q2 on when they are reverse biased, bypassing their reverse rectifier and increasing circuit efficiency. Each device is allowed to turn off only when forward biased.

The Q1-Q2 switch connects the ac power source to the load when its instantaneous voltage is the same polarity and less than the control voltage. U1a is configured as an ideal positive rectifier whose output follows the control voltage when it is positive, and is zero otherwise. Similarly, U1b is a negative rectifier. U1c turns Q1 on whenever the ac input voltage is lower than the positive rectifier output. For negative control voltages, Q1 is turned on only during the negative half-cycle. For positive control voltages, Q1 is turned on during the end portions of the positive half-cycle. Similarly, U1d turns Q2 on whenever the ac input voltage is higher than the output of the negative rectifier.

400 Hz SERVO AMPLIFIER

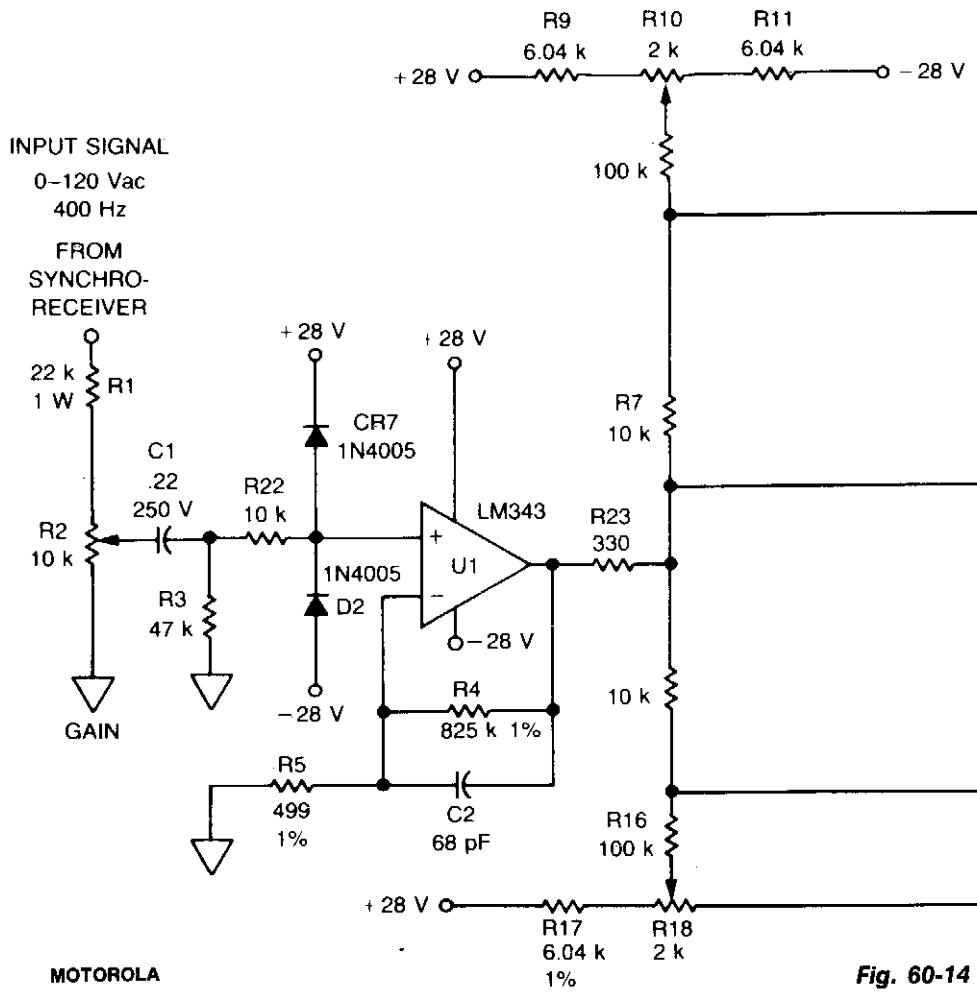

Fig. 60-14

Circuit Notes

The signal from a synchro receiver or a variable resistive cam follower (potentiometer) is boosted by operational amplifier U1, whose output swing is limited by back-to-back zeners D3 and D4. The signal is then applied to operational amplifiers U2 and U3, which drive the gates of Q1 and Q2 respectively. The npn transistor (Q3) is a fast current limiter for the n-channel MTM8N10; a pnp transistor (Q4) performs the same function for the p-channel MTM8P10. Capacitors C3 and C4 eliminate the need for accurate dc offset zeroing. T1 steps up the output voltage to 120 V for the 400 Hz servo motor.

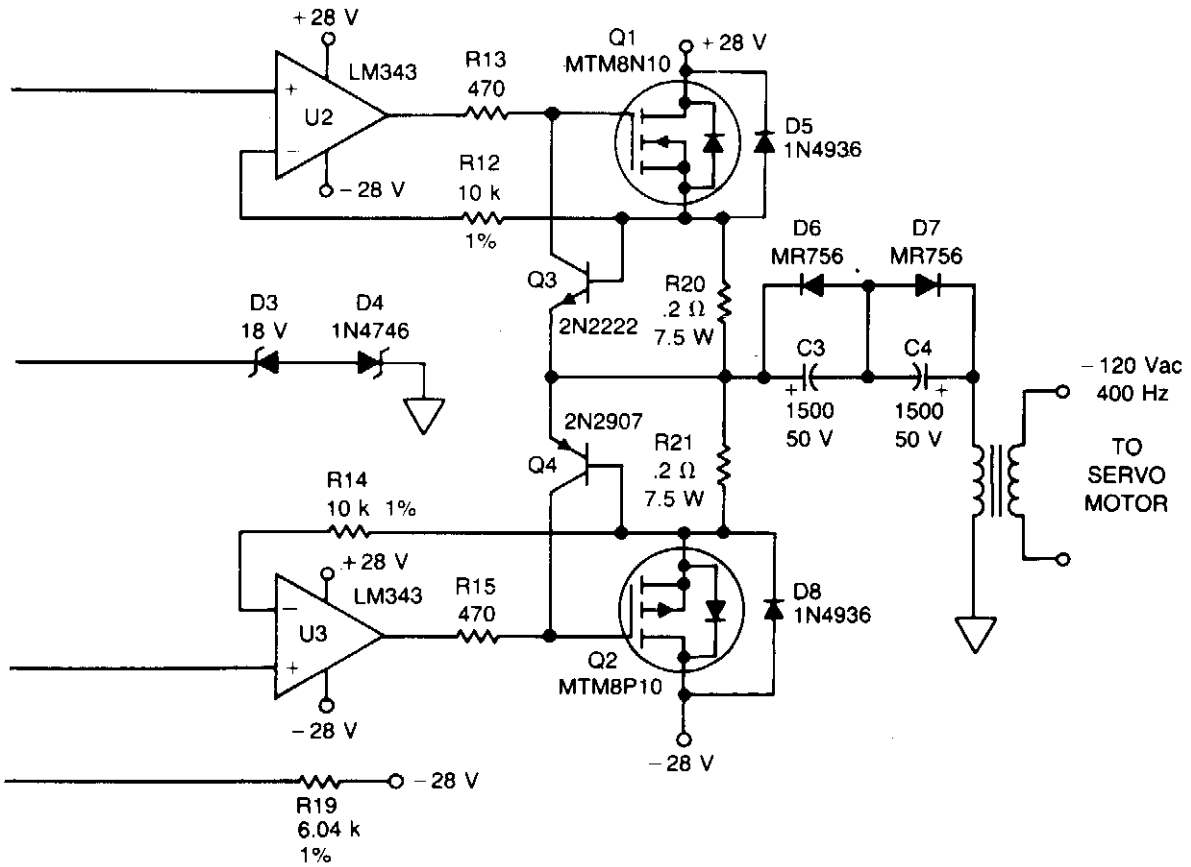
+28 V
LM343
U2
R13
470
Q1
MTM8N10
+28 V
D5
1N4936
R12
10 k
1%
−28 V
D6
MR756
D7
MR756
Q3
2N2222
R20
.2 Ω
7.5 W
D3
18 V
D4
1N4746
C3
1500
50 V
C4
1500
50 V
−120 Vac
400 Hz
TO
SERVO
MOTOR
2N2907
Q4
R21
.2 Ω
7.5 W
R14
10 k 1%
+28 V
LM343
U3
R15
470
D8
1N4936
Q2
MTM8P10
−28 V
−28 V
R19
6.04 k
1%
−28 V

THREE-PHASE POWER-FACTOR CONTROLLER

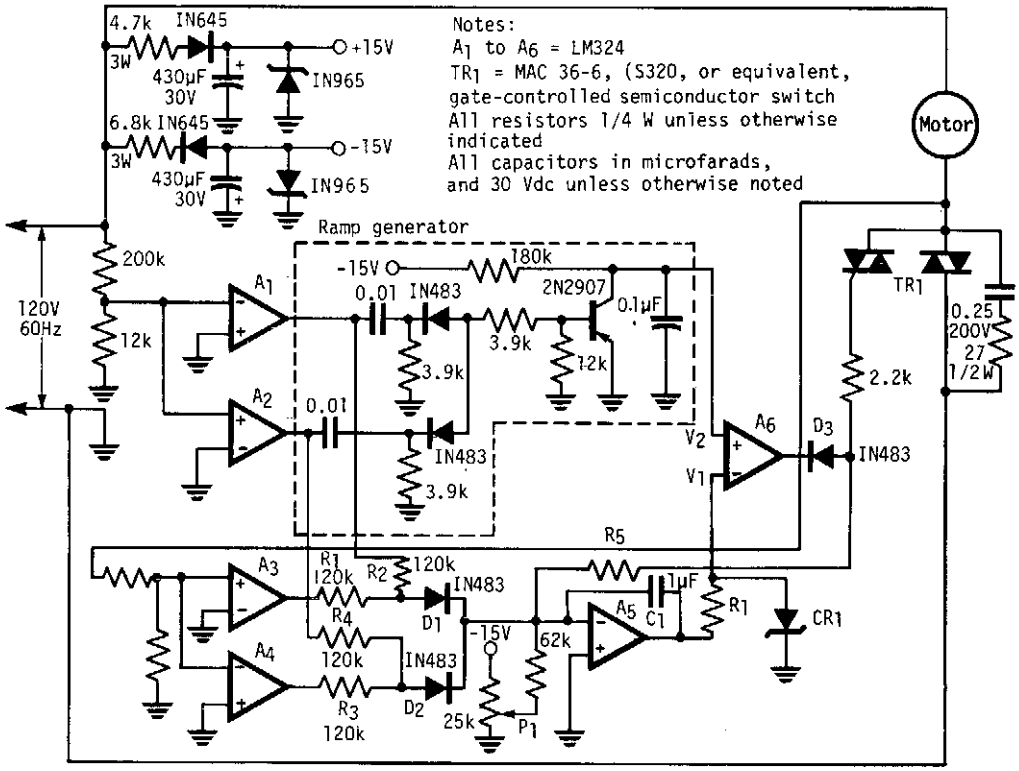

ELECTRONIC ENGINEERING

Fig. 60-15

Circuit Notes

The modified power-factor controller, developed at the Marshall Space Flight Center, employs a phase detector for each of the three phase windings of a delta-connected induction motor. The phase-difference sum is the basis for control. Instabilities of earlier systems are overcome with improved feedback control incorporating a 20Hz bandwidth signal.

MOTOR/TACHOMETER SPEED CONTROL

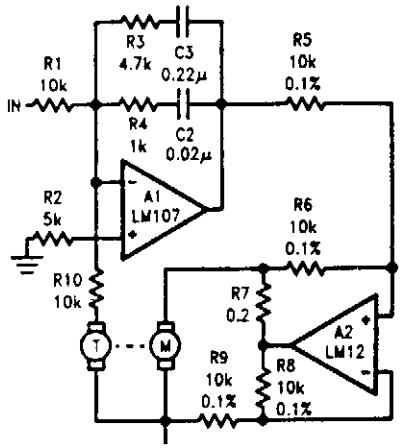

NATIONAL SEMICONDUCTOR CORP.

Fig. 60-16

Circuit Notes

The tachometer, on the same shaft as the dc motor, is simply a generator. It gives a dc output voltage proportional to the speed of the motor. A summing amplifier, A1, controls its output so that the tachometer voltage equals the input voltage, but of opposite sign. With current drive to the motor, phase lag to the tachometer is 90°, before the second order effects come in. Compensation on A1 is designed to give less than 90° phase shift over the range of frequencies where the servo loop goes through unity gain. Should response time be of less concern, a power op amp could be substituted for A1 to drive the motor directly. Lowering break frequencies of the compensation would, of course, be necessary. The circuit could also be used as a position servo. All that is needed is a voltage indicating the sense and magnitude of the motor shaft displacement from a desired position. This error signal is connected to the input, and the servo works to make it zero. The tachometer is still required to develop a phase-correcting rate signal because the error signal lags the motor drive by 180°.

CLOSED LOOP, TACHOMETER FEEDBACK CONTROL

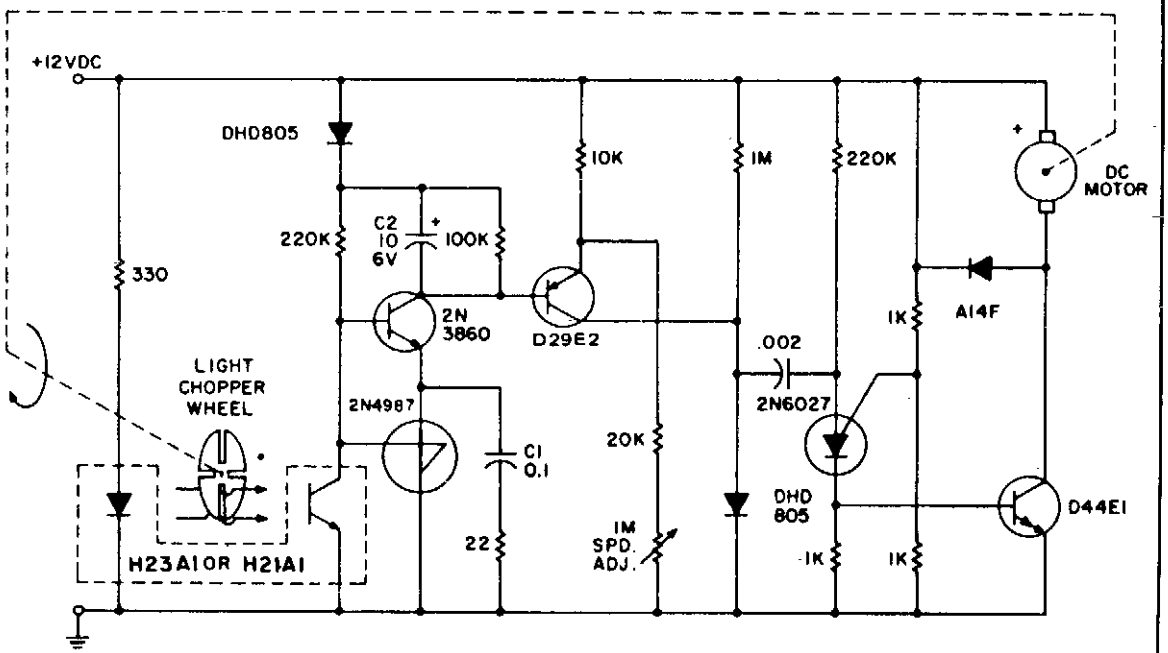

GENERAL ELECTRIC

Fig. 60-17

Circuit Notes

The system utilizes the H21A1 and a chopper disc to provide superior speed regulation when the dynamic characteristics of the motor system and the feedback system are matched to provide stability. The tachometer feedback system illustrated was designed around specific motor/load combinations and may require modification to prevent hunting or oscillation with other combinations. This dc motor control utilizes the optachometer circuit previously shown to control a P.U.T. pulse generator that drives the D44E1 darlington transistor which powers the motor.

61

Multiplier Circuits

The sources of the following circuits are contained in the Sources section beginning on page 694. The figure number contained in the box of each circuit correlates to the source entry in the Sources section.

Analog Multiplier
0.01% Analog Multiplier

ANALOG MULTIPLIER

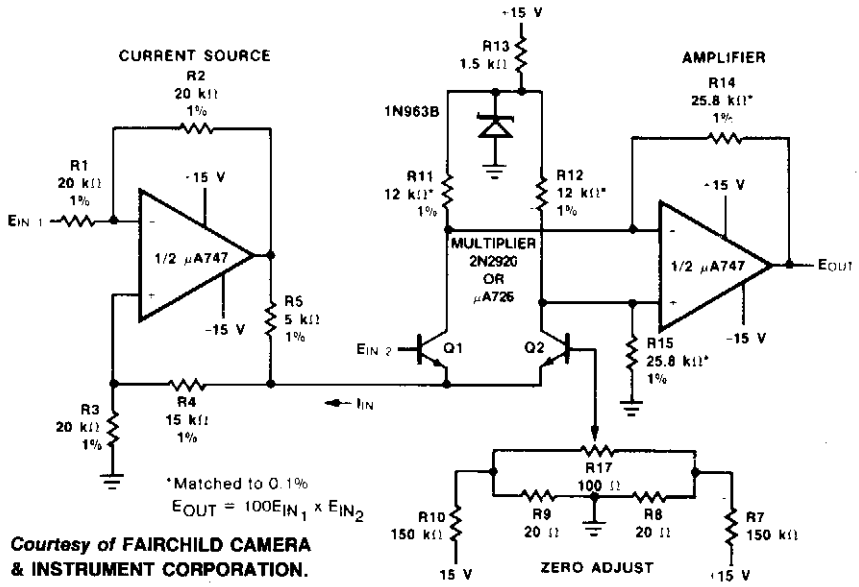

Courtesy of FAIRCHILD CAMERA & INSTRUMENT CORPORATION.

Fig. 61-1

0.01% ANALOG MULTIPLIER

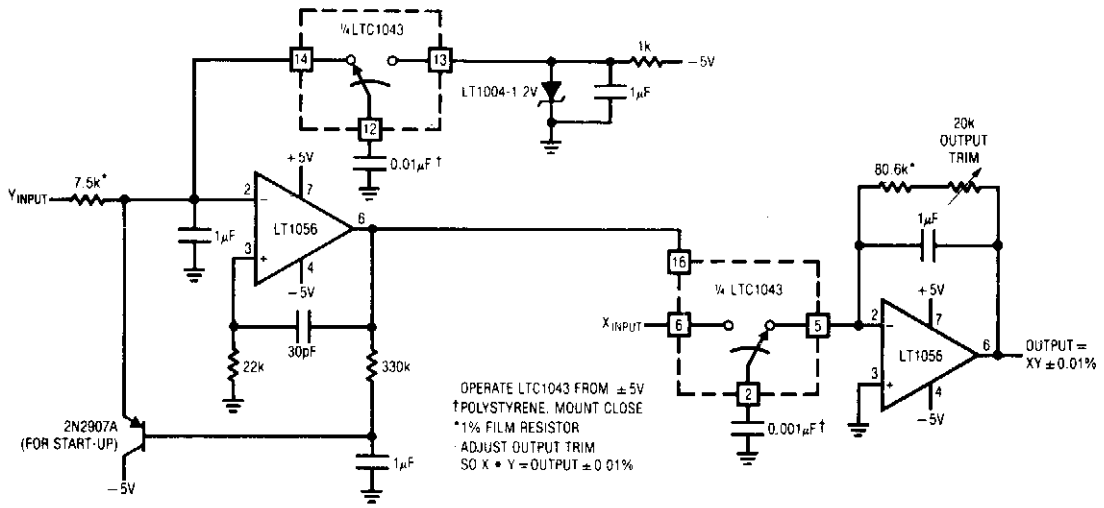

LINEAR TECHNOLOGY CORPORATION

Fig. 61-2

Circuit Notes

The F → V input frequency is locked to the V → F output because the LTC1043's clock is common to both sections. The F → V's reference is used as one input of the multiplier, while the V → F furnishes the other. To calibrate, short the X and Y inputs to 1.7320 V and trim for a 3-V output.

62

Noise Reduction Circuits

The sources of the following circuits are contained in the Sources section beginning on page 694. The figure number contained in the box of each circuit correlates to the source entry in the Sources section.

Audio Squelch Circuit
Precise Audio Clipper
Balance Amplifier with Loudness Control
Noise Limiter
Audio-Powered Noise Clipper

AUDIO SQUELCH CIRCUIT

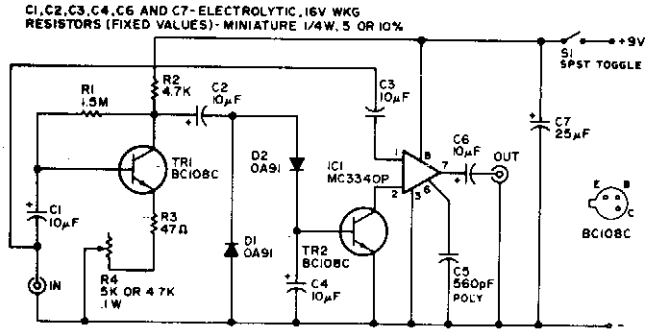

73 MAGAZINE

Fig. 62-1

Circuit Notes

This simple audio squelch unit suppresses all input signals below a preset threshold.

PRECISE AUDIO CLIPPER

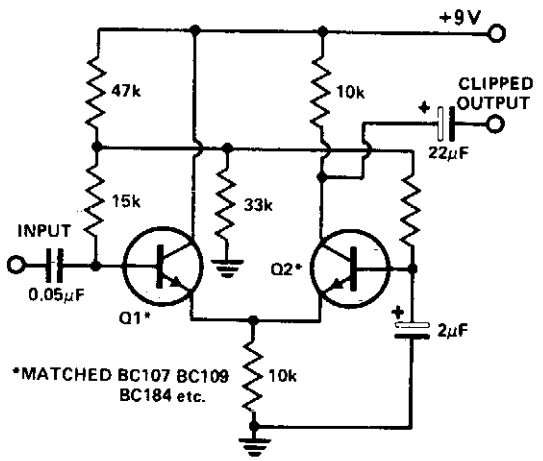

ELECTRONICS INTERNATIONAL TODAY

Fig. 62-2

Circuit Notes

A differential amplifier makes an excellent audio clipper and can provide precise, symmetrical clipping. The circuit shown commences clipping at an input of 100 mV. The output commences clipping at ±3 V. Matching Q7 and Q2 is necessary for good symmetrical clipping. (If some asymmetry can be tolerated, this need not be done.)

BALANCE AMPLIFIER WITH LOUDNESS CONTROL

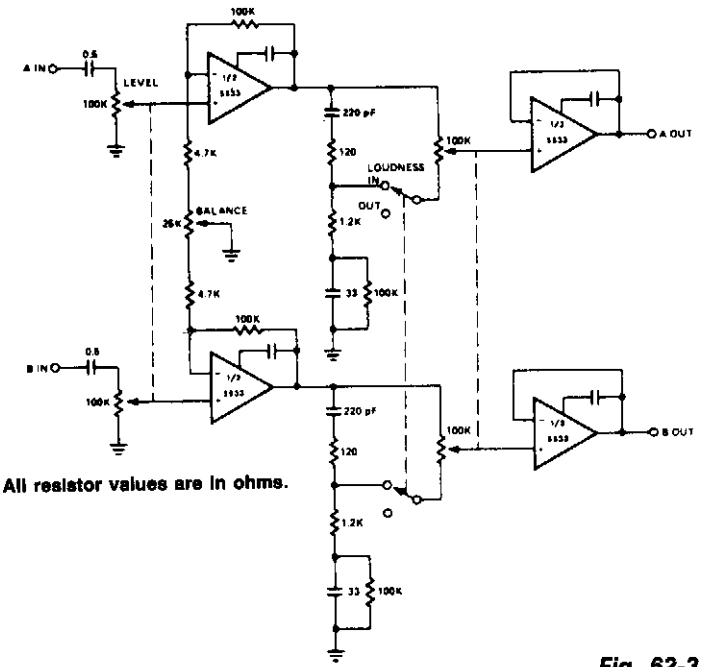

SIGNETICS

Fig. 62-3

NOISE LIMITER

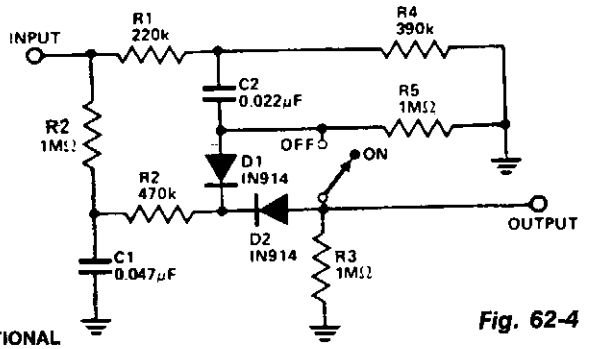

ELECTRONICS TODAY INTERNATIONAL

Fig. 62-4

Circuit Notes

This limiter improves signal-to-noise ratio. It is connected between the detector output and the audio input (if high impedance) or at some relatively high-impedance section between two audio stages—preferably the low level stages. D1 and D2 can be any diode having relatively low forward resistance and very high back resistance. The circuit is excellent for receivers having bandwidths down to 2 or 3 kHz. Increase the value of C1 for receivers having narrower bandwidths.

AUDIO-POWERED NOISE CLIPPER

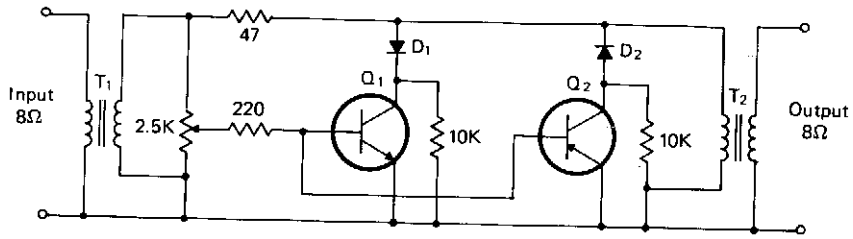

CQ

Fig. 62-5

Circuit Notes

T1 and T2 are 600 to 8 ohm transformers (any transistor radio output transformers with 500 to 4 ohm impedance may be used). Q1 is a 2N2222 npn transistor, and Q2 is a 2N2907 pnp transistor. D1 and D2 1N270 signal diodes (HEP 134 or 135). Two transistors, powered by the audio power contained within the signal, will clip signal peaks which exceed the threshold established by the 2.5 K potentiometer. The diodes isolate the positive and negative clipping circuits represented by the npn and pnp transistors, respectively. A desired audio operating level can be established and the potentiometer needs little or no further adjustment.

63

Notch Filters

The sources of the following circuits are contained in the Sources section beginning on page 694. The figure number contained in the box of each circuit correlates to the source entry in the Sources section.

Adjustable Q Notch Filter
1800 Hz Notch Filter
550 Hz Notch Filter
Tunable Audio Notch Filter Circuit
Audio Notch Filter
Tunable Notch Filter Uses an Operational Amplifier
Active Band-Reject Filter
Wien Bridge Notch Filter
Tunable Audio Filter
Passive Bridged, Differentiator Tunable Notch Filter

ADJUSTABLE Q NOTCH FILTER

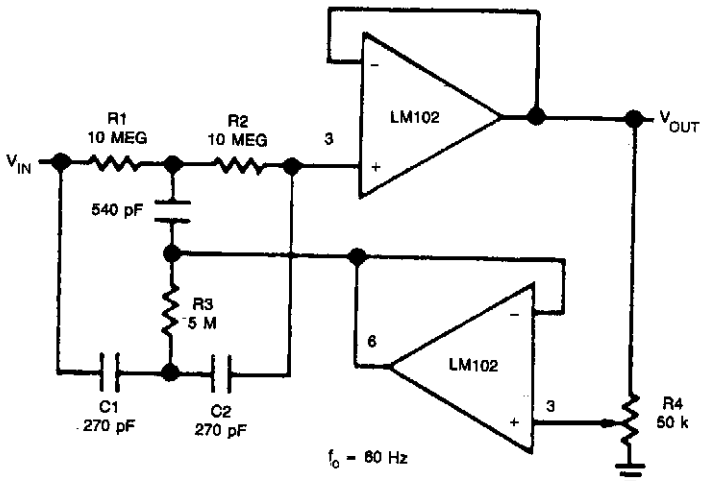

NATIONAL SEMICONDUCTOR CORP.

Fig. 63-1

Circuit Notes

In applications where the rejected signal might deviate slightly from the null on the notch network, it is advantageous to lower the Q of the network. This insures some rejection over a wider range of input frequencies. The figure shows a circuit where the Q may be varied from 0.3 to 50. A fraction of the output is fed back to R3 and C3 by a second voltage follower, and the notch Q is dependent on the amount of signal fed back. A second follower is necessary to drive the twin "T" from a low-resistance source so that the notch frequency and depth will not change with the potentiometer setting.

1800 Hz NOTCH FILTER

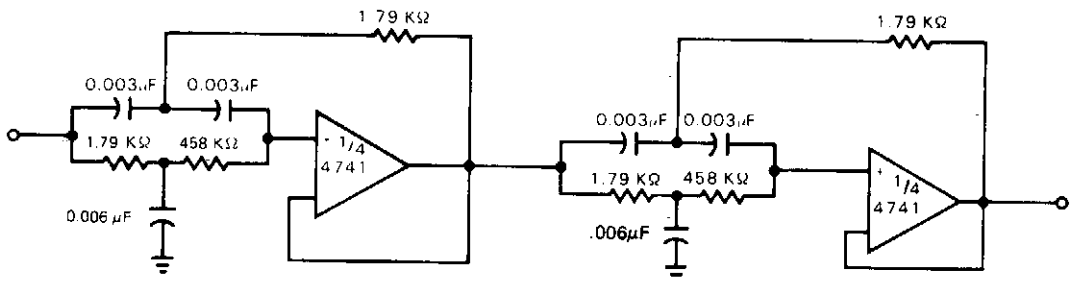

EXAR

Fig. 63-2

Circuit Notes

The circuit produces at least 60 dB of attenuation of the notch frequency.

550 Hz NOTCH FILTER

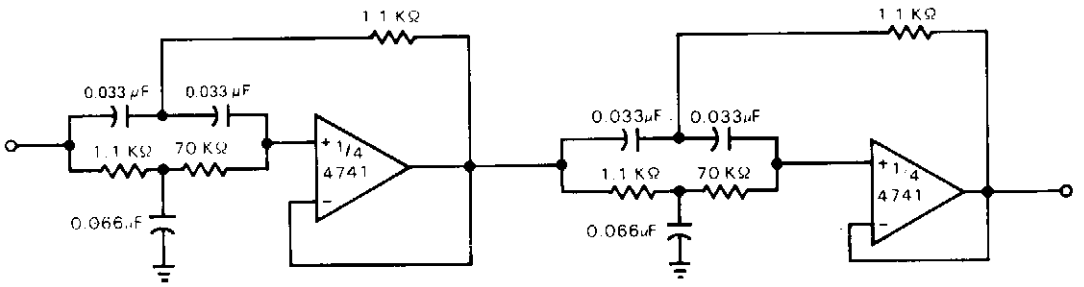

EXAR

Fig. 63-3

Circuit Notes

The circuit produces at least 60 dB of attenuation of the notch frequency.

TUNABLE AUDIO NOTCH FILTER CIRCUIT

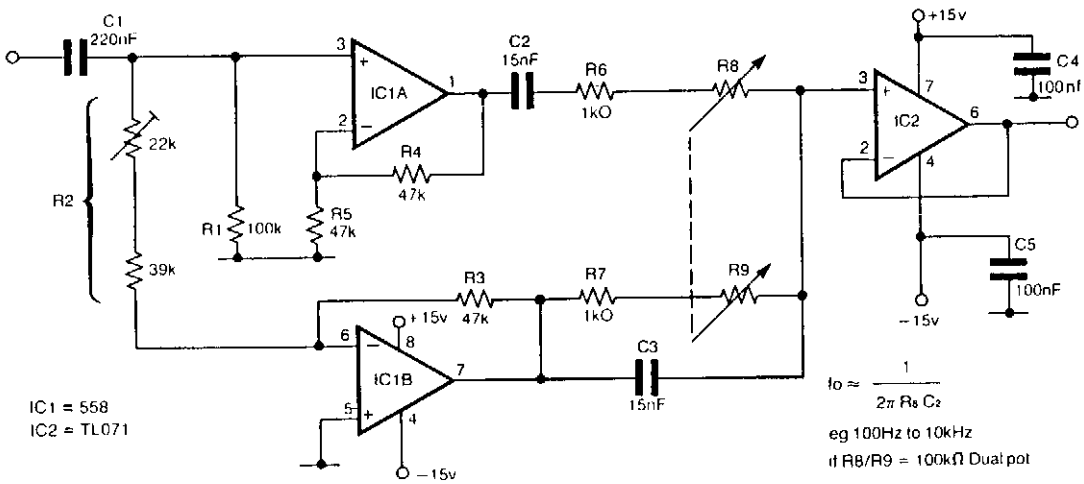

ELECTRONIC ENGINEERING

Fig. 63-4

Circuit Notes

The circuit requires only one dual-ganged potentiometer to tune over a wide range; if necessary over the entire audio range in one sweep. The principle used is that of the Wien bridge, fed from anti-phase inputs. The output should be buffered as shown with a FET input op amp, particularly if a high value pot is used. An op amp with differential outputs (eg., MC1445) may be used in place of the driver ICS; R2 may be made trimmable to optimize the notch.

AUDIO NOTCH FILTER

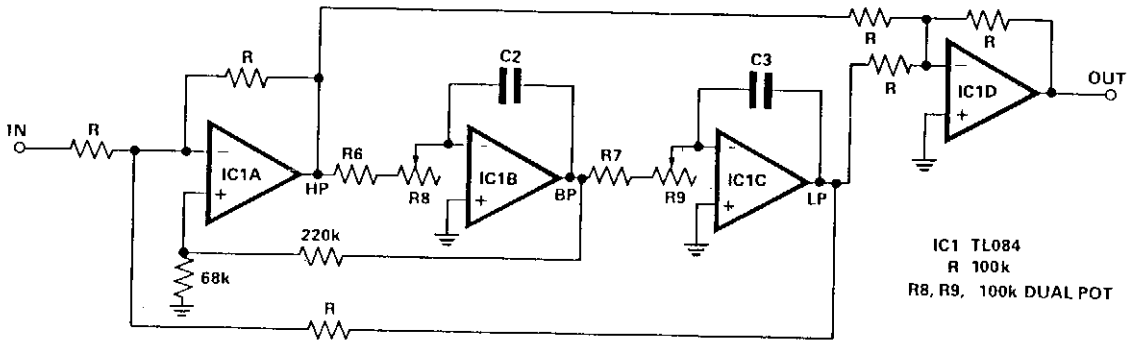

ELECTRONIC ENGINEERING

Fig. 63-5

Circuit Notes

With the circuit shown here the response at one octave off tune is within 10% of the far out response: notch sharpness may be increased or reduced by reducing or increasing respectively the 68 K ohm resistor. Linearity tracking of R8 and R9 has no effect on notch depth. The signals at HP and LP are always in antiphase, notch will always be very deep at the tuned frequency, despite tolerance variations in R6-9 and C2, C3.

TUNABLE NOTCH FILTER USES AN OPERATIONAL AMPLIFIER

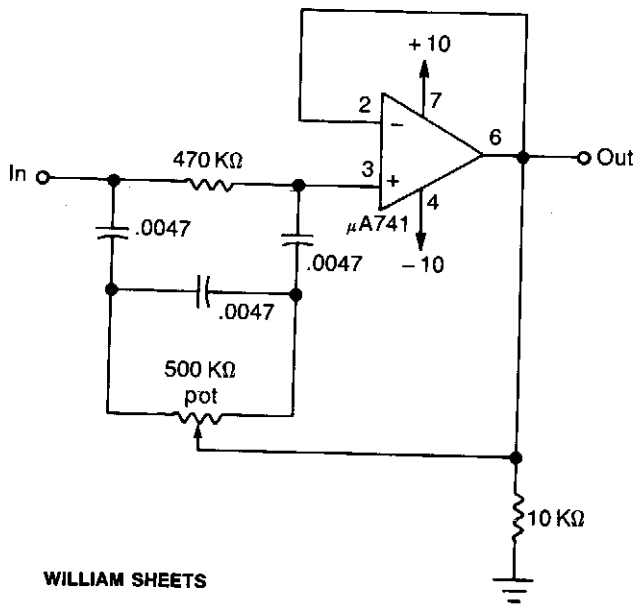

WILLIAM SHEETS

Fig. 63-6

Circuit Notes

This notch filter is useful for tunable band-reject applications in the audio range. The values shown will give a tuning range of about 300-1500 Hz.

ACTIVE BAND-REJECT FILTER

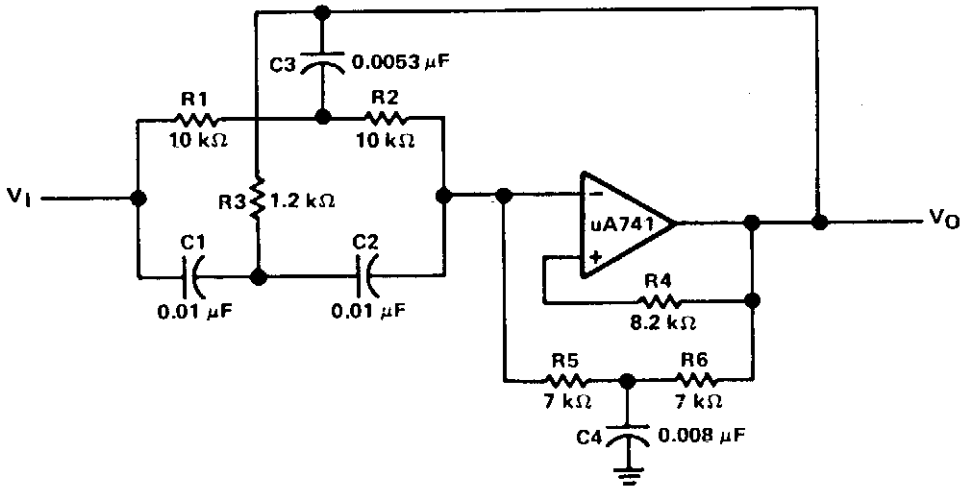

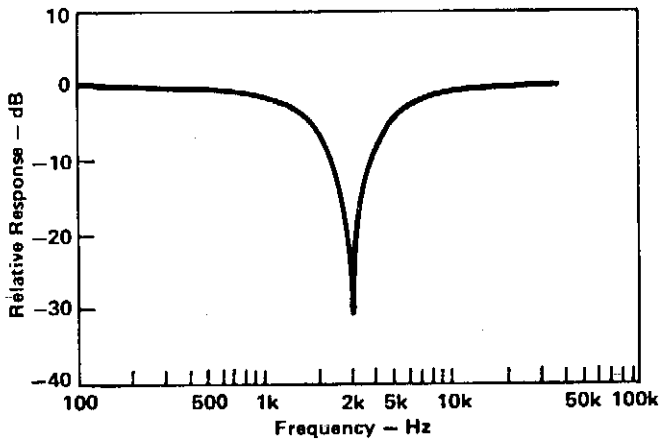

TEXAS INSTRUMENTS

Fig. 63-7

Circuit Notes

A filter with a band-reject characteristic is frequently referred to as a notch filter. A typical circuit using a μA 741 is the unity-gain configuration for this type of active filter shown. The filter response curve shown is a second-order band-reject filter with a notch frequency of 3 kHz. The resulting Q of this filter is about 23, with a notch depth of −31 dB. Although three passive T networks are used in this application, the operational amplifier has become a sharply tuned low-frequency filter without the use of inductors or large-value capacitors.

WIEN BRIDGE NOTCH FILTER

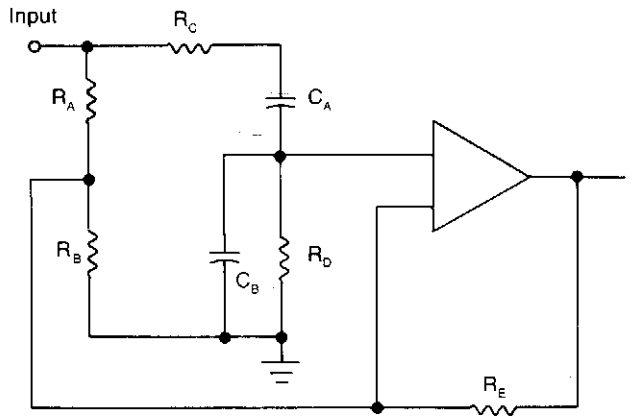

WILLIAM SHEETS

Fig. 63-8

if $R_A = R_B = R_C = R_D = R_E = R$ and $C_A = C_B = C$

$$f_{null} = \frac{1}{6.28\ RC}$$

R megohm
C microfarad
f Hertz

TUNABLE AUDIO FILTER

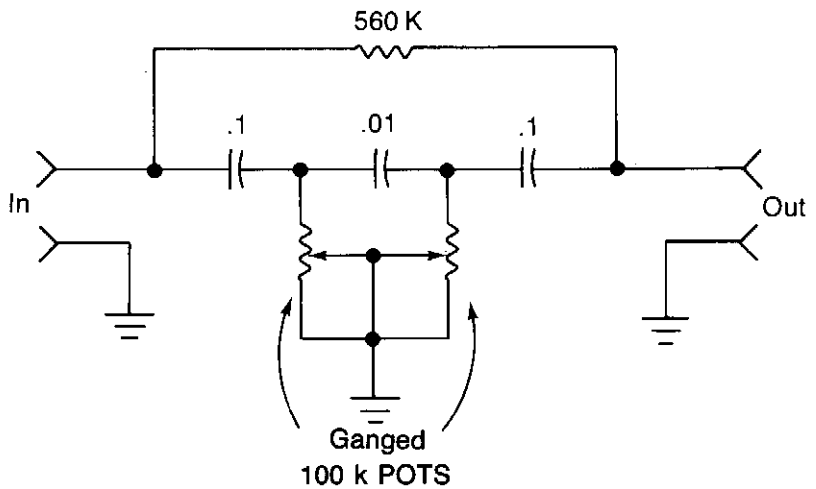

WILLIAM SHEETS.

Fig. 63-9

Circuit Notes

This filter covers the upper part of the audio passband and can be used to eliminate unwanted high frequencies from audio signals.

PASSIVE BRIDGED, DIFFERENTIATOR TUNABLE NOTCH FILTER

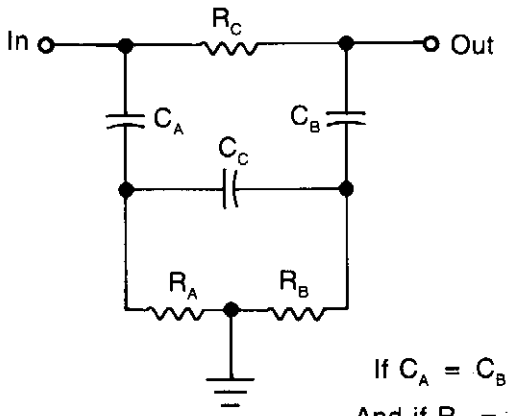

If $C_A = C_B = C_C = C$

And if $R_3 = 6(R_A + R_B)$

$$\text{Then } \left\{ \begin{matrix} \text{Notch} \\ \text{freq} \end{matrix} \right\} = \frac{1}{6.28\, C\sqrt{3R_AR_B}}$$

If R_A and R_B is made a potentiometer then the filter can be variable.

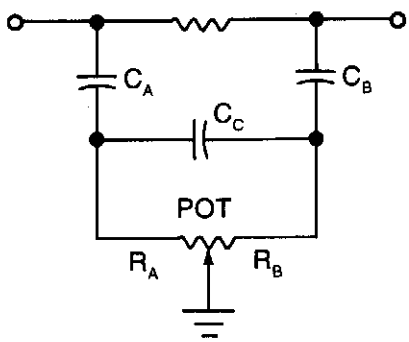

WILLIAM SHEETS

Fig. 63-10

R_A and R_B are sections of potentiometer.

64

Operational Amplifier Circuits

The sources of the following circuits are contained in the Sources section beginning on page 694. The figure number contained in the box of each circuit correlates to the source entry in the Sources section.

Variable Gain and Sign Op Amp Circuit
Single Potentiometer Adjusts Op Amp's Gain Over Bipolar Range

VARIABLE GAIN AND SIGN OP AMP CIRCUIT

Fig.1

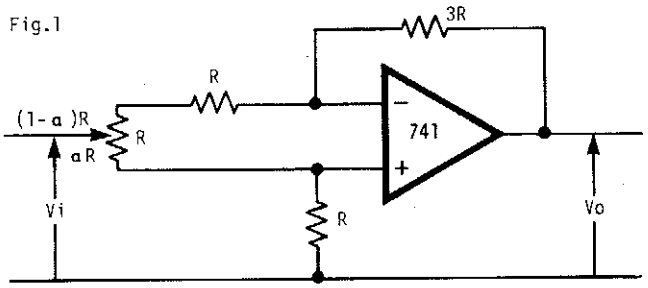

Fig.2

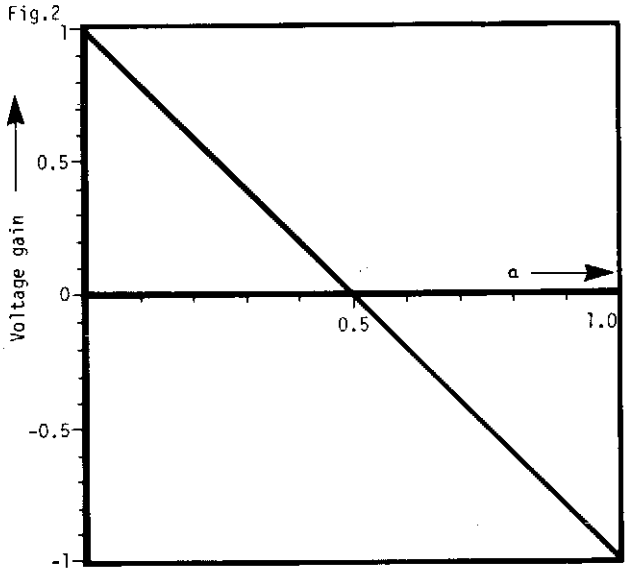

ELECTRONIC ENGINEERING

Fig. 64-1

Circuit Notes

The gain of the amplifier is smoothly-controllable between the limits of +1 to −1. It is adjustable over this range using a single potentiometer. The voltage gain of the arrangement is given by:

$$\frac{V_o}{V_i} = \frac{2(1-2\alpha)}{(1+\alpha)(2-\alpha)}$$

Where α represents the fractional rotation of the potentiometer, R.

SINGLE POTENTIOMETER ADJUSTS OP AMP'S GAIN OVER BIPOLAR RANGE

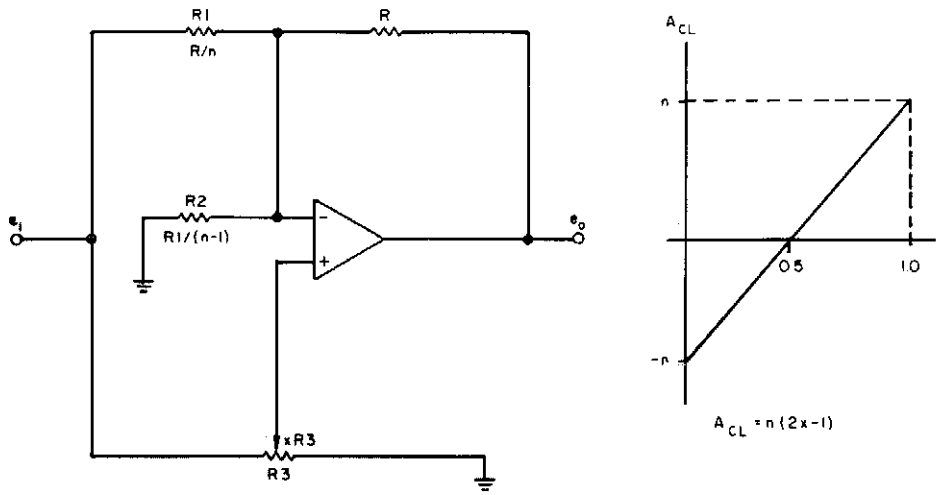

Fig. 64-2

ELECTRONIC DESIGN

Circuit Notes

An op amp's gain level can be adjusted over its full inverting and noninverting gain range. R3 varies the signal applied to both the inverting and noninverting amplifier inputs. When the wiper position (denoted by x) equals zero, the noninverting amplifier input is grounded. This also holds the voltage across R2 at zero, so R2 has no effect on operation. Now only R1 and R carry feedback current, and the amplifier operates at a gain of $-n$. At the other pot extreme, where $x = 1$, the input signal is connected directly to the noninverting input. Since feedback maintains a near-zero voltage between the amplifier inputs, the amplifier's inverting input will also be near the input signal level, thus little voltage is across R1, also now the gain is $+n$. The amplifier should be driven from a low impedance source to minimize source loading error, low offset op amps should be used.

65

Optically-Coupled Circuits

The sources of the following circuits are contained in the Sources section beginning on page 694. The figure number contained in the box of each circuit correlates to the source entry in the Sources section.

Three-Phase Switch for Inductive Load
Integrated Solid State Relay
Stable Optocoupler
Microprocessor Triac Array Driver
DC Linear Coupler
Linear AC Analog Coupler
Simple AC Relay Using Two Photon Couplers
Linear Analog Coupler
High Sensitivity, Normally Open, Two Terminal, Zero Voltage Switching Half-Wave Contact Circuit
High Speed Paper Tape Reader
Digital Transmission Isolator
Isolation and Zero Voltage Switching Logic
Optical Communication System
Linear Optocoupler Circuit for Instrumentation
50 kHz Center Frequency FM Optical Transmitter
Receiver for 50 kHz FM Optical Transmitter

THREE-PHASE SWITCH FOR INDUCTIVE LOAD

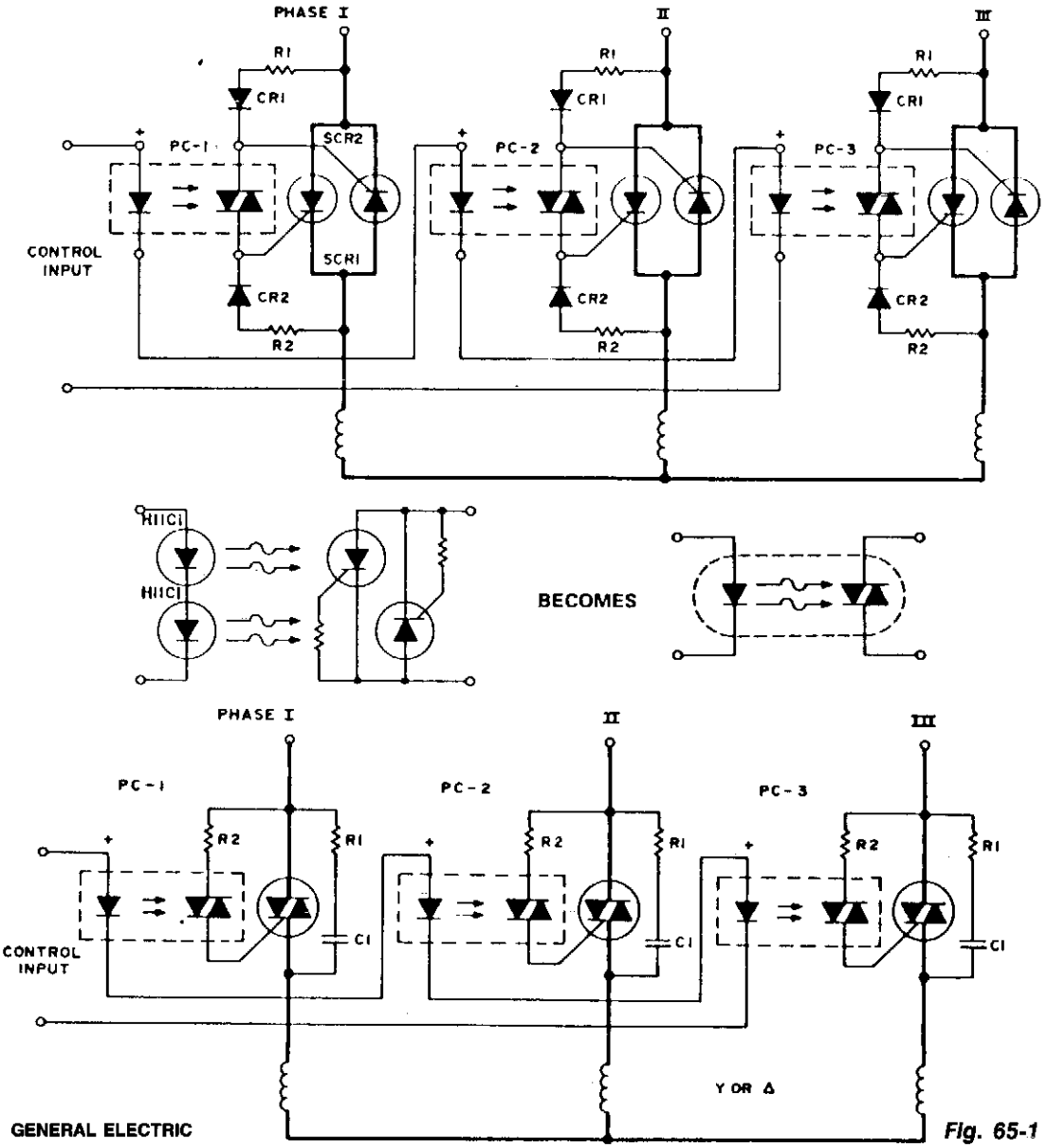

GENERAL ELECTRIC

Fig. 65-1

Circuit Notes

The following are three-phase switches for low voltage. Higher currents can be obtained by using inverse parallel SCRs which would be triggered as shown. To simplify the following schematics and facilitate easy understanding of the principles involved, the following schematic substitution is used (Note the triac driver is of limited use at 3 ϕ voltage levels).

INTEGRATED SOLID STATE RELAY

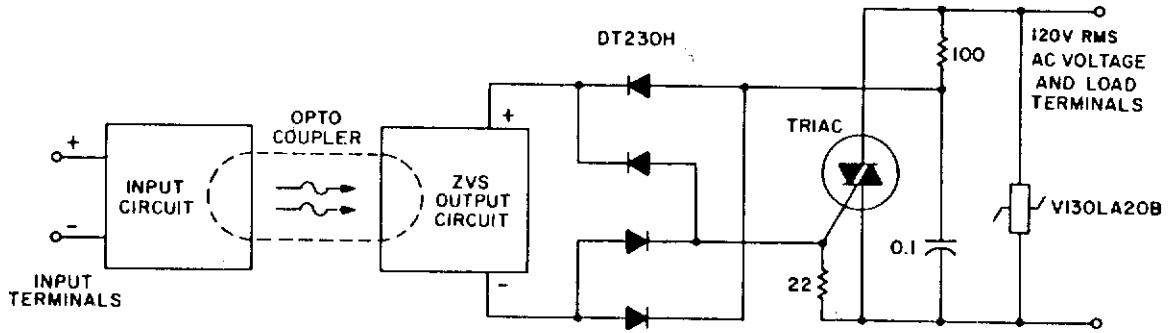

GENERAL ELECTRIC

Fig. 65-2

Circuit Notes

A complete zero-voltage switch solid-state relay contains an input circuit, an output circuit, and the power thyristor. The circuit illustrates a triac power thyristor with snubber circuit and GE-MOV^{R} II Varistor transient over-voltage protection. The 22 ohm resistor shunts di/dt currents, passing through the bridge diode capacitances, from the triac gate, while the 100 ohm resistor limits surge and gate currents to safe levels. Although the circuits illustrated are for 120-V rms operation, relays that operate on 220 V require higher voltage ratings on the MOV, rectifier diodes, triac, and pilot SCR. The voltage divider that senses zero crossing must also be selected to minimize power dissipation in the transistor optisolator circuit for 220-V operation.

STABLE OPTOCOUPLER

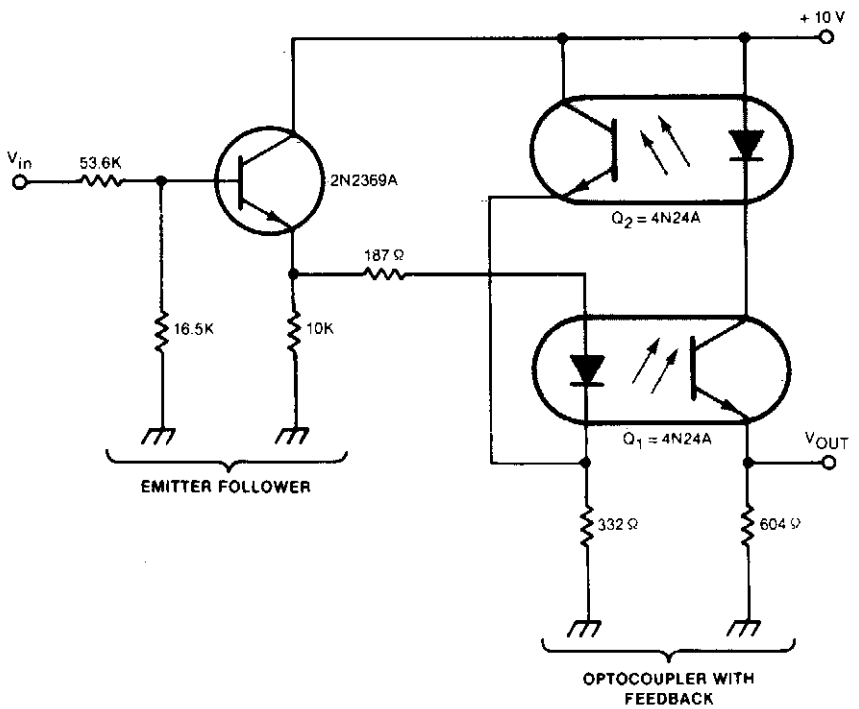

NASA

Fig. 65-3

Circuit Notes

A circuit stabilizes the current-transfer ratio (CTR) of an optically coupled isolator used as a linear transducer. The optocoupler produces a voltage output that is proportional to—but electrically isolated from—the voltage input. However, the output voltage is directly affected by changes in the CTR, and the CTR can change substantially with temperature and current. To a lesser extent the CTR changes with time over the life of the optocoupler. The circuit employs a feedback circuit containing a second optocoupler. The feedback signal tends to oppose changes in the overall CTR.

MICROPROCESSOR TRIAC ARRAY DRIVER

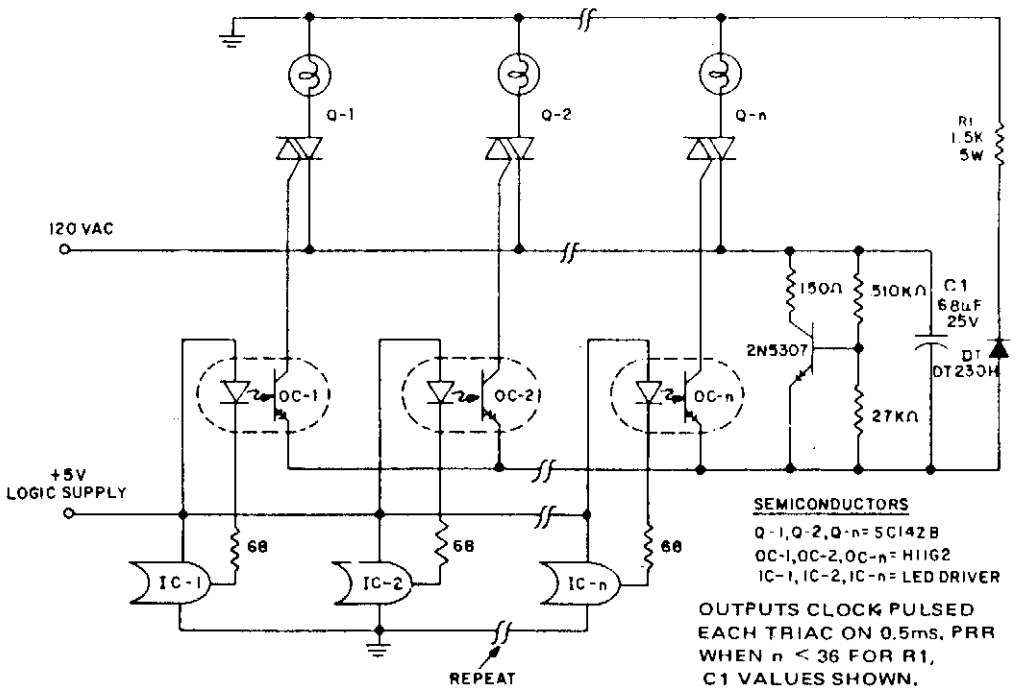

GENERAL ELECTRIC

Fig. 65-4

Circuit Notes

In microprocessor control of multiple loads, the minimum cost per load is critical. A typical application example is a large display involving driving arrays of incandescent lamps. This circuit provides minimal component cost per stage and optocoupler triggering of triac power switches from logic outputs. The minimal component cost is attained by using more complex software in the logic. A darlington output optocoupler provides gate current pulses to the triac, with cost advantages gained from eliminating the current limiting resistor and from the low cost coupler. The trigger current source is a dipped tantalum capacitor, charged from the line via a series resistor with coarse voltage regulation being provided by the darlington signal transistor. The resistor and capacitor are shared by all the darlington-triac pairs and are small in size and cost due to the low duty cycle of pulsing. Coupler IRED current pulses are supplied for the duration of one logic clock pulse (2-10 μsec), at 0.4 to 1 msec intervals, from a LED driver I.C. The pulse timing is derived from the clock waveform when the logic system requires triac conduction. A current limiting resistor is not used, which prevents Miller effect slowdown of the H11G2 switching speed to the extent the triac is supplied insufficient current to trigger. Optodarlington power dissipation is controlled by the low duty cycle and the capacitor supply characteristics.

DC LINEAR COUPLER

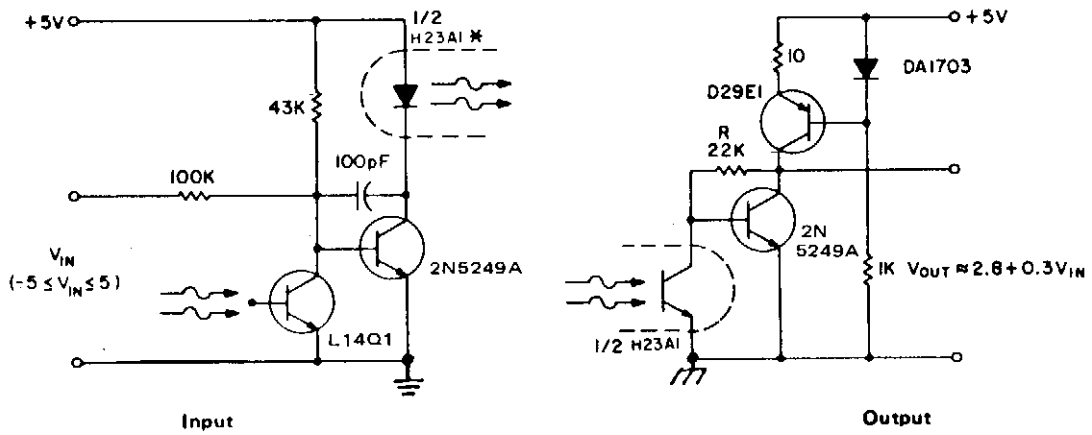

LINEAR OPTICAL COUPLER CIRCUIT

*Closely positioned to illuminate L14Q1 and H23A1 Detector, such that $V_{OUT} \cong 2.8V$ at $V_{IN} = 0$.

GENERAL ELECTRIC

Fig. 65-5

Circuit Notes

The accuracy of direct linear coupling of analog current signals via an optocoupler is determined by the coupler linearity and its temperature coefficient. Use of an additional coupler for feedback can provide linearity only if the two couplers are perfectly matched and identically biased. These are not practical constraints in most equipment designs and indicate the need for a different design approach. One of the most successful solutions to this problem can be illustrated by using a H23 emitter-detector pair and a L14H4. The H23 detector and L14H4 are placed so both are illuminated by the H23 IRED emitter. Ideally, the circuit is mechanically designed such that the H23 emitter may be positioned to provide $V_{OUT} = 2.8$ V when $V_{IN} = 0$, thereby insuring collector current matching in the detectors. Then all three devices are locked in position relative to each other. Otherwise, R may be adjusted to provide the proper null level, although temperature tracking should prove worse when R is adjusted. Note that the input bias is dependent on power supply voltage, although the output is relatively independent of supply variations. Testing indicated linearity was better than could be resolved, due to alignment motion caused by using plastic tape to lock positions. The concept of feedback control of IRED power output is useful for both information transmission and sensing circuitry.

LINEAR AC ANALOG COUPLER

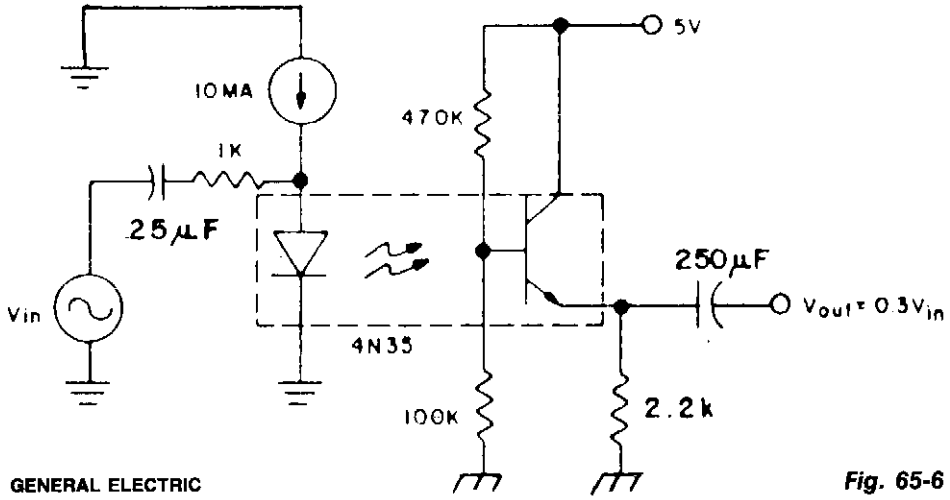

GENERAL ELECTRIC

Fig. 65-6

Circuit Notes

With the coupler biased in the linear region by the 10 mA dc bias on the IRED and the voltage divider on the phototransistor base, photodiode current flows out of the base into the voltage divider, producing an ac voltage proportional to the ac current in the IRED. The transistor is biased as an emitter follower and requires less than 10% of the photodiode current to produce the low impedance ac output across the emitter resistor. Note that the H11AV1 may be substituted for the 4N35 to provide VDE line voltage rated isolation of less than 0.5 pF.

SIMPLE AC RELAY USING TWO PHOTON COUPLERS

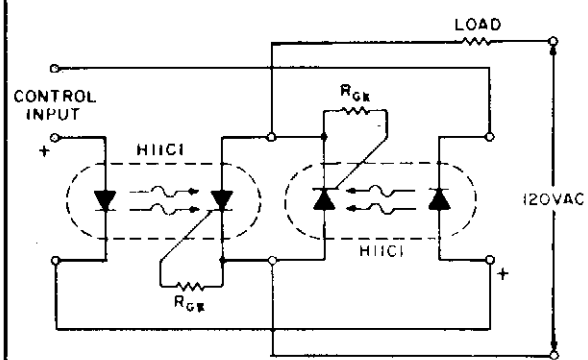

GENERAL ELECTRIC

Fig. 65-7

Circuit Notes

If load current requirements are relatively low (i.e. maximum forward rms current 500 mA), an ac solid state relay can be constructed quite simply by the connection of two H11C optically coupled SCRs in a back-to-back configuration as illustrated.

LINEAR ANALOG COUPLER

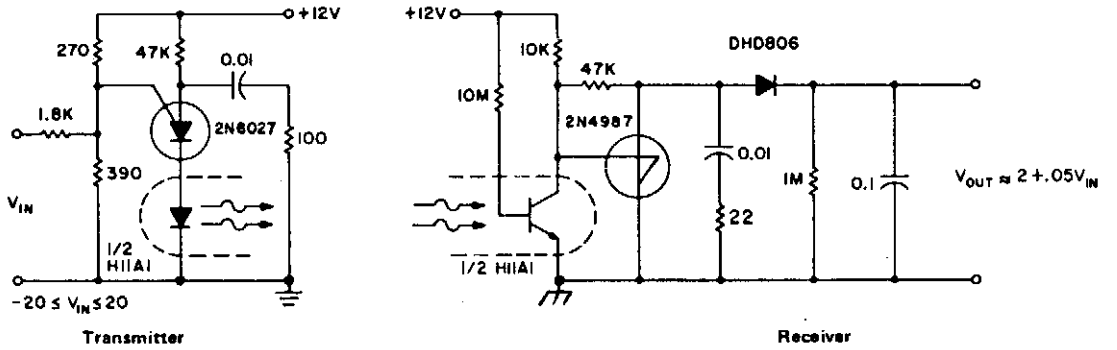

GENERAL ELECTRIC

Fig. 65-8

Circuit Notes

The minimum parts count version of this system provides isolated, linear signal transfer useful at shorter distances or with an optocoupler for linear information transfer. Although the output is low level and cannot be loaded significantly without harming accuracy, a single I.C. operational or instrumentation amplifier can supply both the linear gain and buffering for use with a variety of loads.

HIGH SENSITIVITY, NORMALLY OPEN, TWO TERMINAL, ZERO VOLTAGE SWITCHING, HALF-WAVE CONTACT CIRCUIT

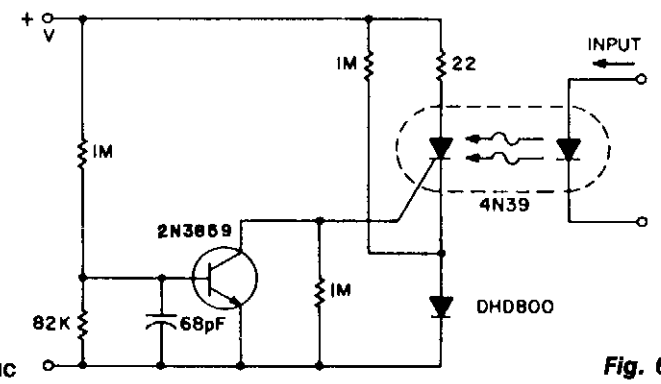

GENERAL ELECTRIC

Fig. 65-9

Circuit Notes

The SCR coupler circuit provides higher sensitivity to input signals as illustrated. This allows the lower cost 4N39 (H11C3) to be used with the > 7 mA drive currents supplied by the input circuit.

HIGH SPEED PAPER TAPE READER

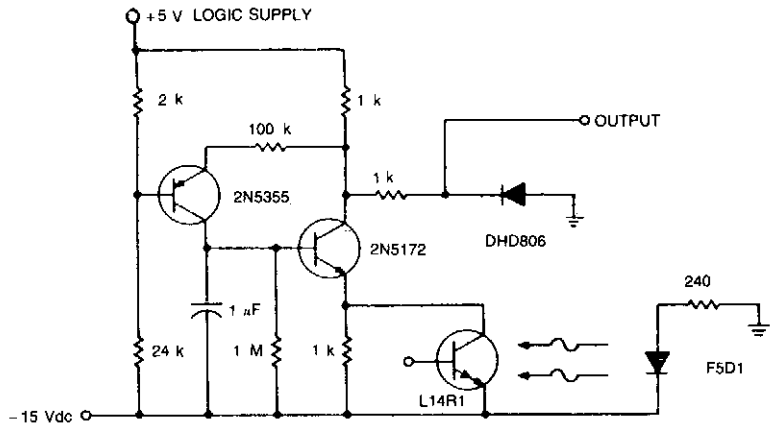

GENERAL ELECTRIC

Fig. 65-10

Circuit Notes

When computer peripheral equipment is interfaced, it is convenient to work with logic signal levels. With a nominal 4 V at the output dropping to −0.6 V on illumination, this circuit reflects the requirements of a high-speed, paper tape optical reader system. The circuit operates at rates of up to 1000 bits per second. It will also operate at tape translucency such that 50% of the incident light is transmitted to the sensor, and provide a fixed threshold signal to the logic circuit, all at low cost. Several circuit tricks are required. Photodarlington speed is enhanced by cascode constant voltage biasing. The output threshold and tape translucency requirements are provided for by sensing the output voltage and operating to 2000 bits per second at ambient light levels equal to signal levels.

DIGITAL TRANSMISSION ISOLATOR

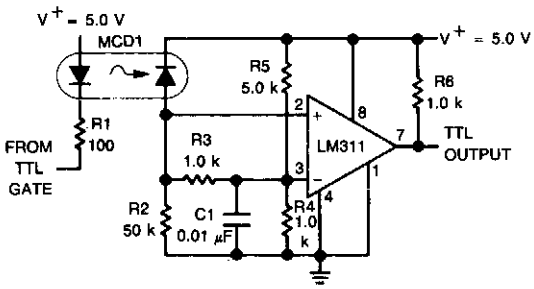

National Semiconductor Corp.

Fig. 65-11

Circuit Notes

An optoelectronics device is used to couple a digital (TTL) signal to another system. The photodiode in the optocoupler drives an LM311 set up to produce a TTL compatible output. It is useful where grounds are not able to be connected for any reason.

ISOLATION AND ZERO VOLTAGE SWITCHING LOGIC

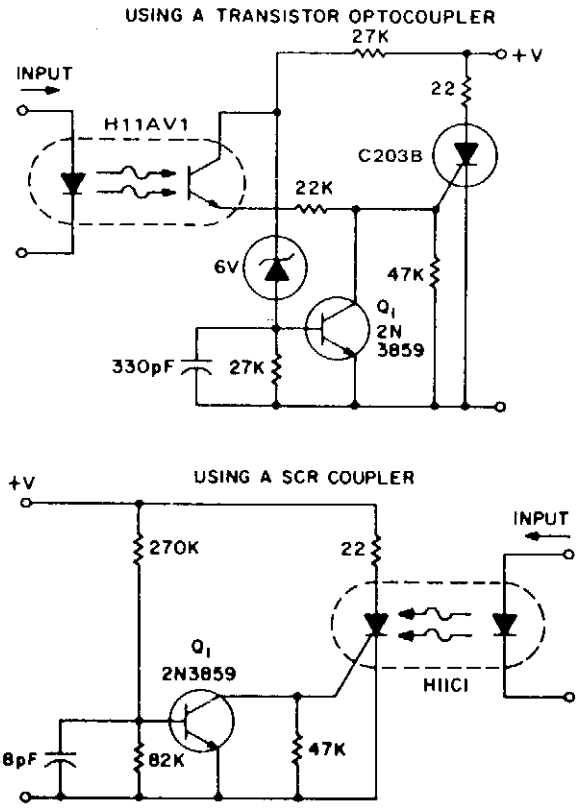

NORMALLY OPEN, TWO TERMINAL, ZERO VOLTAGE SWITCHING HALF WAVE CONTACT CIRCUITS

GENERAL ELECTRIC

Fig. 65-12

Circuit Notes

These two simple circuits provide zero voltage switching. They can be used with full wave bridges or in antiparallel to provide full wave control and are normally used to trigger power thyristors. If an input signal is present during the time the ac voltage is between 0 to 7 V, the SCR will turn on. But, if the ac voltage has risen above this range and the input signal is then applied, the transistor, Q1, will be biased to the "on" state and will hold the SCR and, consequently, the relay "off" until the next zero crossing.

OPTICAL COMMUNICATION SYSTEM

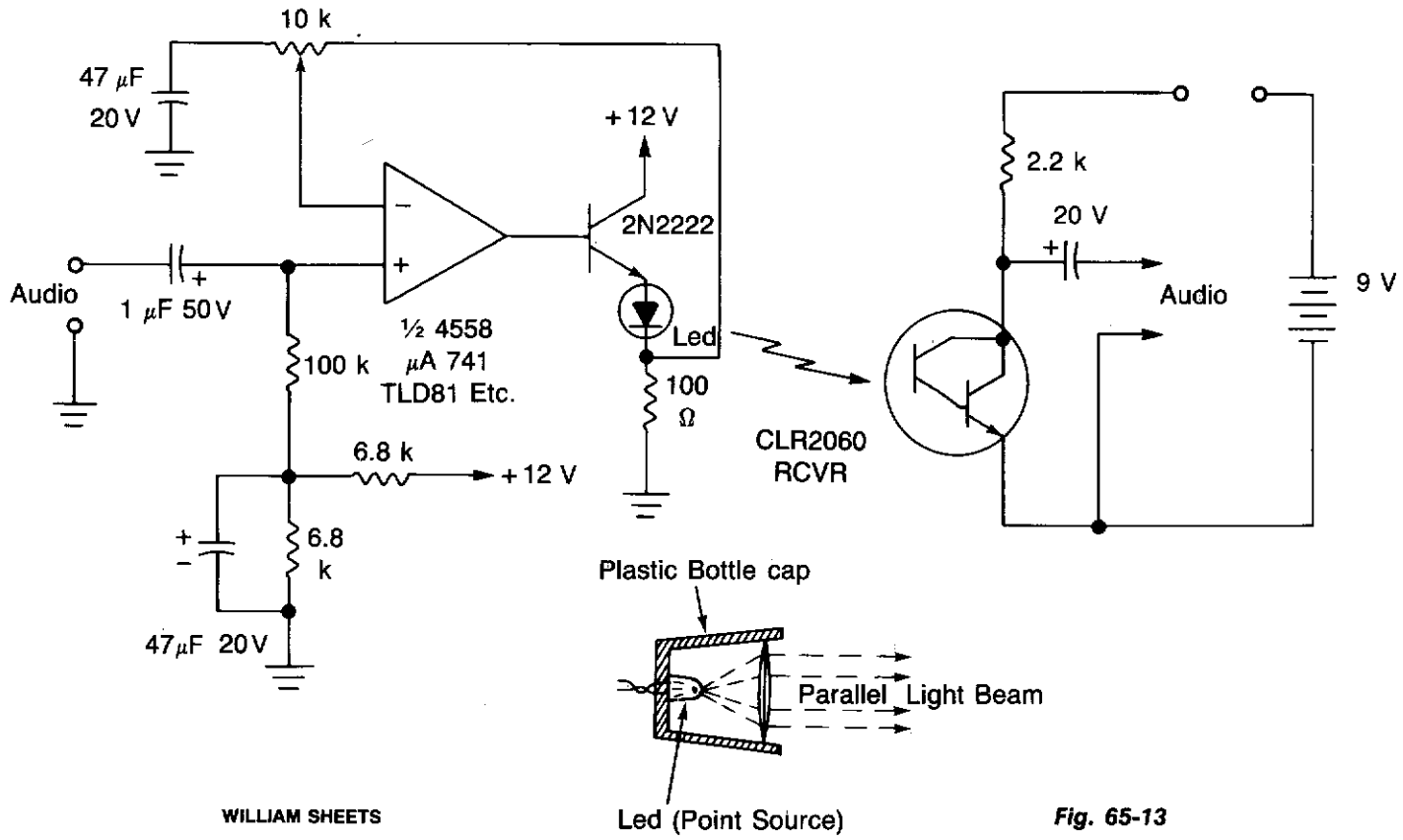

WILLIAM SHEETS

Fig. 65-13

Circuit Notes

The circuit will modulate the light from the LED using a crystal microphone or a loudspeaker output. To obtain the maximum range, the optical system must be efficient (see example). Either a convex lens or a concave mirror can be used to convert the LED output into a parallel beam. The received light is concentrated onto a sensitive photodarlington transistor. At short range the signal across the load resistor is adequate to drive a crystal earpiece, for longer range an amplifier and a loudspeaker are needed.

50 kHz CENTER FREQUENCY FM OPTICAL TRANSMITTER

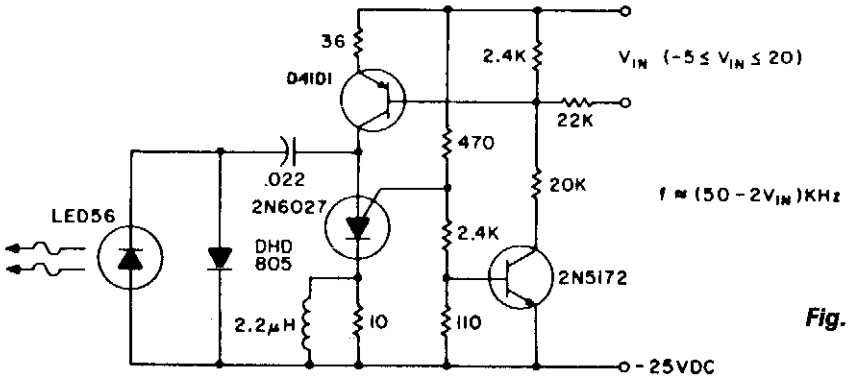

Fig. 65-14

GENERAL ELECTRIC

Circuit Notes

The pulse repetition rate is relatively insensitive to temperature, and power supply voltage and is a linear function of V_{IN}, the modulating voltage. Useful information transfer was obtained in free air ranges of 12 feet (≈ 4m). Lenses or reflectors at the light emitter and detector increases range and minimizes stray light noise effects. Greater range can also be obtained by using a higher power output IRED such as the F5D1 in combination with the L14P2 phototransistor. Average power consumption of the transmitter circuit is less than 3 watts.

LINEAR OPTOCOUPLER CIRCUIT FOR INSTRUMENTATION

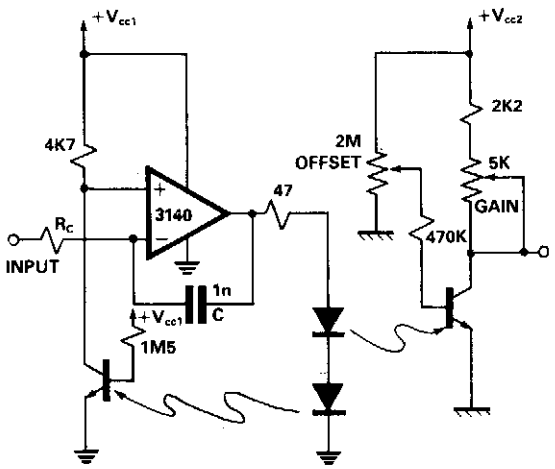

Fig. 65-15

ELECTRONIC ENGINEERING

Circuit Notes

A dual optocoupler is used in a configuration which has the same current throughout as the LEDs. Assuming similar optocoupler features the output voltage must be equal to the non-inverting input voltage. Since the op amp is within a closed loop the output voltage becomes equal to the input voltage. R_c and C perform as a compensation network to prevent oscillations.

RECEIVER FOR 50 kHz FM OPTICAL TRANSMITTER

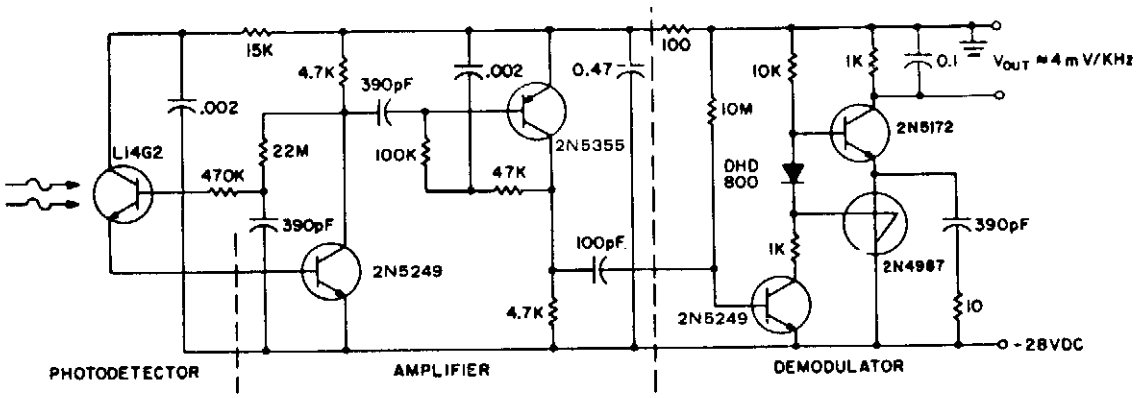

GENERAL ELECTRIC

Fig. 65-16

Circuit Notes

For maximum range, the receiver must be designed in the same manner as a radio receiver front end, since the received signals will be similar in both frequency component and in amplitude of the photodiode current. The major constraint on the receiver performance is signal to noise ratio, followed by e.m. shielding, stability, bias points, parts layout, etc. These become significant details in the final design. This receiver circuit consists of a L14G2 detector, two stages of gain, and a FM demodulator which is the tachometer circuit, modified to operate up to 100 kHz. Better sensitivity can be obtained using more stages of stabilized gain with AGC, lower cost and sensitivity may be obtained by using an H23A1 emitter-detector pair and/or by eliminating amplifier stages. For some applications, additional filtering of the output voltage may be desired.

66

Oscillators

The sources of the following circuits are contained in the Sources section beginning on page 694. The figure number contained in the box of each circuit correlates to the source entry in the Sources section.

RF-Genie
Emitter-Coupled Big Loop Oscillator
Simple Triangle Square Wave Oscillator
Oscillator Adjustable over 10:1 Range
One Second, 1 kHz Oscillator
Single Control Four-Decade Variable Oscillator
Tunable Frequency Oscillators
Resistance Controlled Digital Oscillator
Cassette Bias Oscillator
1 kHz Oscillator
Inexpensive Oscillator is Temperature Stable
Code Practice Oscillator
Wide Range Variable Oscillator

RF-GENIE

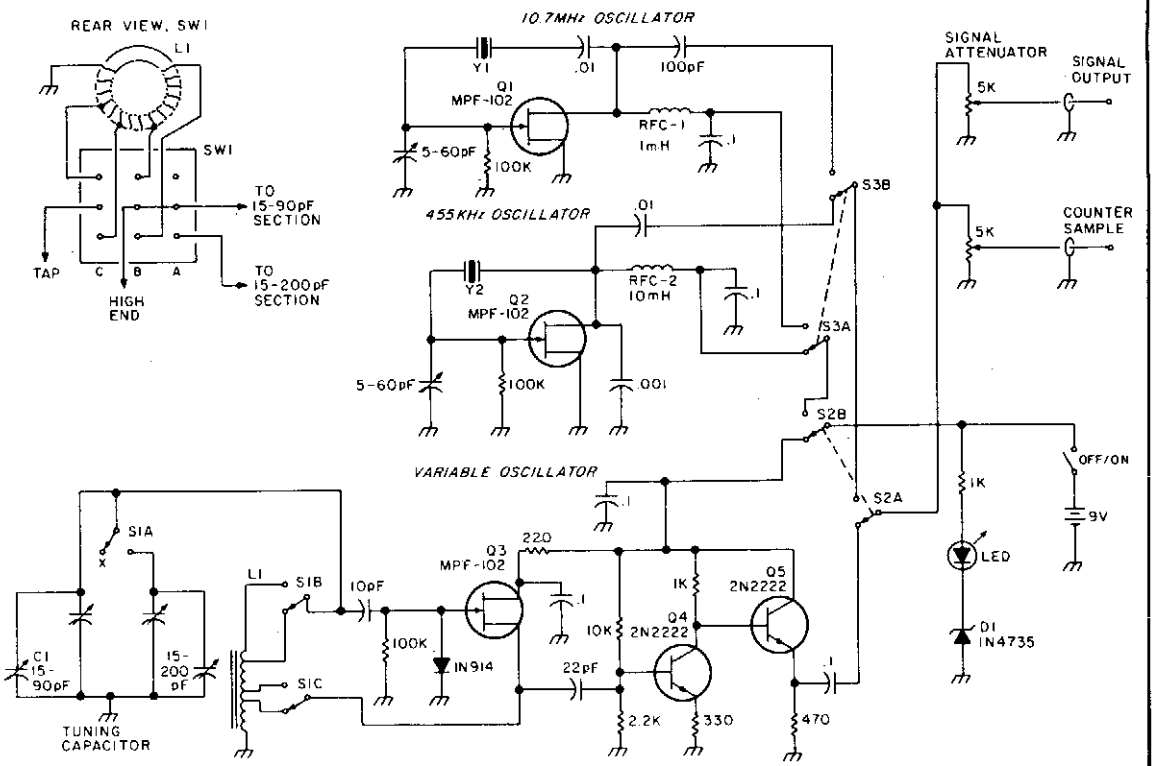

73 MAGAZINE

Fig. 66-1

Circuit Notes

A variable oscillator covers 3.2 to 22 MHz in two bands—providing coverage of 80 through 15 meters plus most crystal-filter frequencies. Optional 455 kHz and 10.7 MHz crystal oscillators can be switched on-line for precise *if* alignment. Generator output is on the order of 4 volts p-p into a 500 ohm load. A simple voltage-divider attenuator controls the generator's output level, and a second output provides sufficient drive for an external frequency counter.

EMITTER-COUPLED BIG LOOP OSCILLATOR

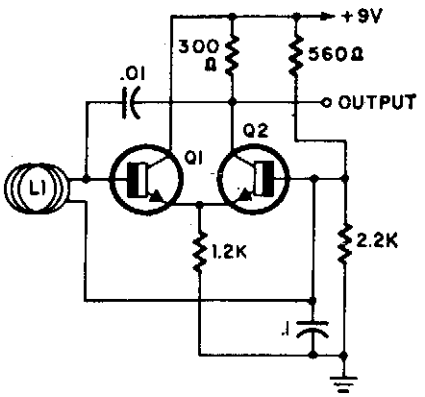

RADIO-ELECTRONICS *Fig. 66-2*

Circuit Notes

L1 is a loop of 10 to 20 turns of insulated wire with a diameter anywhere between 4″ to 4′. Oscillator frequency (7 to 30 MHz) shifts substantially when a person comes near or into the loop. This oscillator together with a resonant detector might make a very good anti-personnel alarm. Transistors are 2N2926 or equivalent.

SIMPLE TRIANGLE SQUARE WAVE OSCILLATOR

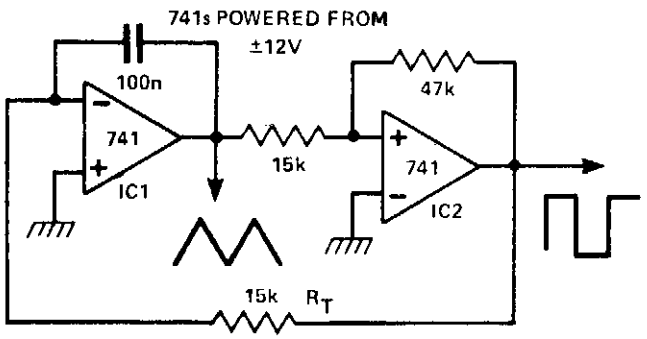

ELECTRONICS TODAY INTERNATIONAL *Fig. 66-3*

Circuit Notes

This circuit generates simultaneously, a triangle and a square waveform. It is self starting and has no latch up problems. IC1 is an integrator with a slew rate determined by CT and RT and IC2 is a Schmitt trigger. The output of IC1 ramps up and down between the hysteresis levels of the Schmitt, the output of which drives the integrator. By making RT variable, it is possible to alter the operating frequency over a 100 to 1 range. Three resistors, one capacitor, and a dual op amp is all that is needed to make a versatile triangle and square wave oscillator with a possible frequency range of 0.1 Hz to 100 kHz.

OSCILLATOR ADJUSTABLE OVER 10:1 RANGE

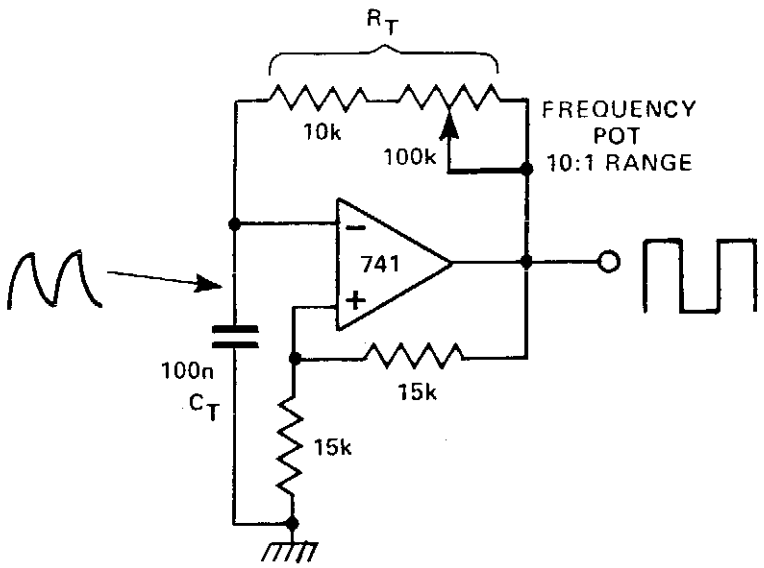

ELECTRONICS TODAY INTERNATIONAL

Fig. 66-4

Circuit Notes

In this circuit, there are two feedback paths around an op amp. One is positive dc feedback which forms a Schmitt trigger. The other is a CR timing network. Imagine that the output voltage is +10 V. The voltage at the noninverting terminal is +15 V. The voltage at the inverting terminal is a rising voltage with a time constant of C_TR_T. When this voltage exceeds +5 V, the op amp's output will go low and the Schmitt trigger action will make it snap into its negative state. Now the output is −10 V and the voltage at the inverting terminal falls with the time constant as before. By changing this time constant with a variable resistor, a variable frequency oscillation may be produced.

ONE SECOND, 1 kHz OSCILLATOR

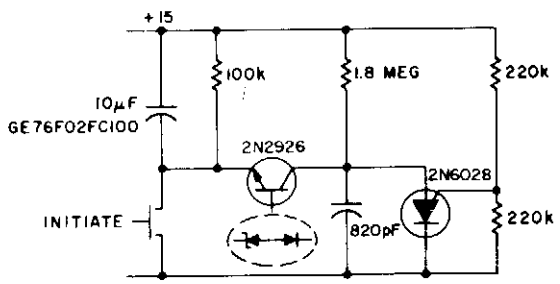

GENERAL ELECTRIC

Fig. 66-5

Circuit Notes

This circuit operates as an oscillator and a timer. The 2N6028 is normally on due to excess holding current through the 100 k resistor. When the switch is momentarily closed, the 10 μF capacitor is charged to a full 15 volts and 2N2926 starts oscillating (1.8 M and 820 pF). The circuit latches when 2N2926 zener breaks down again.

SINGLE CONTROL FOUR-DECADE VARIABLE OSCILLATOR

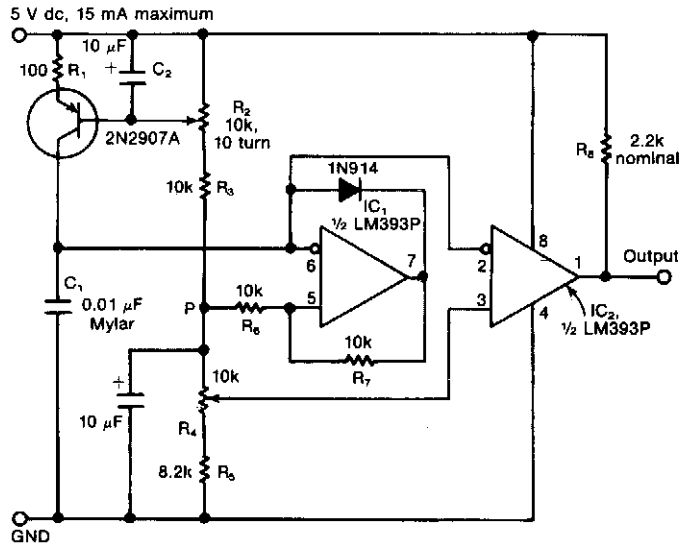

ELECTRONIC DESIGN

Fig. 66-6

Circuit Notes

The circuit consists of a variable current source that charges a capacitor, which is rapidly discharged by a Schmitt-trigger comparator. The sawtooth waveform thus produced is fed to another comparator, one with a variable switching level. The output from the second comparator is a pulse train with an independently adjustable frequency and duty cycle. The variable-frequency ramp generator consists of capacitor C1, which is charged by a variable and nonlinear current source. The latter comprises a 2N2907A pnp transistor, plus resistor R1 and the potentiometer R2. Capacitor C2 eliminates any ripple or noise at the base of the transistor that might cause frequency jitter at the output.

TUNABLE FREQUENCY OSCILLATORS

FREQUENCY RANGE
40 Hz to 65 kHz

OUTPUT PULSE

Rise time ~ 200 nsec.
Pulse width ~ 10 μsec.
Recovery time < 200 nsec.

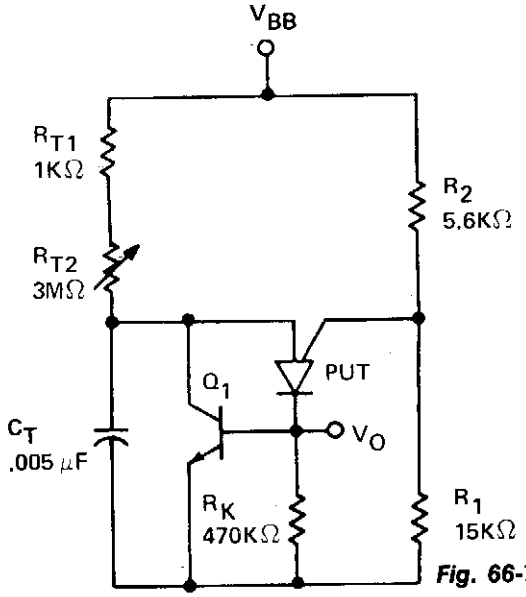

Fig. 66-7A

FREQUENCY RANGE
40 Hz to 40 kHz

OUTPUT PULSE

Width ~ 5 μsec.

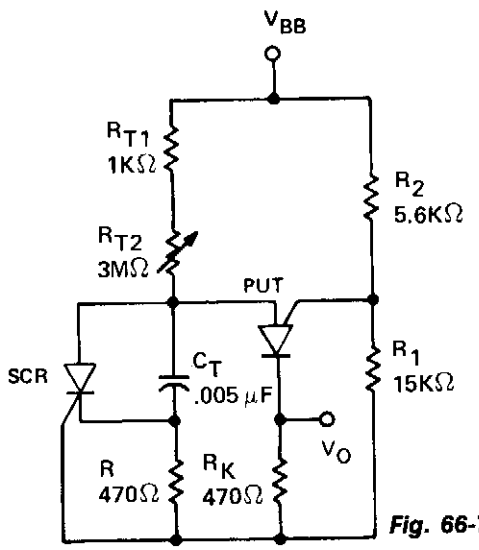

Fig. 66-7B

UNITRODE CORPORATION

Circuit Notes

The variable oscillator circuit includes active elements for discharging the timing capacitor C_T shown in Fig. 66-7A. A second method is given as in Fig. 66-7B.

RESISTANCE CONTROLLED DIGITAL OSCILLATOR

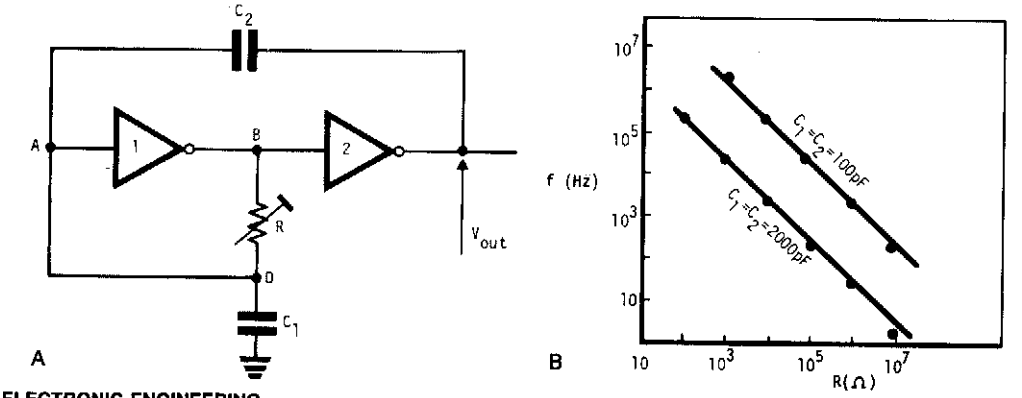

ELECTRONIC ENGINEERING

Fig. 66-8

Circuit Notes

This very simple, low cost oscillator, is built with two CMOS buffer inverters, two capacitors and a variable resistance. The circuit can work with voltages ranging from 4 V up to 18 V. If C1 = C2, the frequency of oscillation, (ignoring the output and input impedance) is given by:

$$f = \frac{1}{4\pi\sqrt{2RC}}$$

The graph in Fig. B shows how the output frequency varies with resistance when C1 = C2 = 100 pF and C1 = C2 = 2000 pF.

CASSETTE BIAS OSCILLATOR

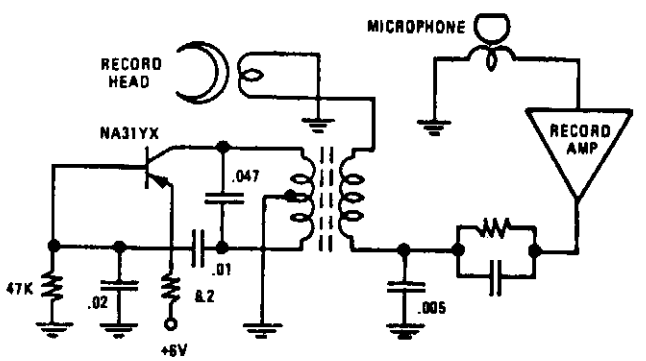

Fig. 66-9

NATIONAL SEMICONDUCTOR

1 kHz OSCILLATOR

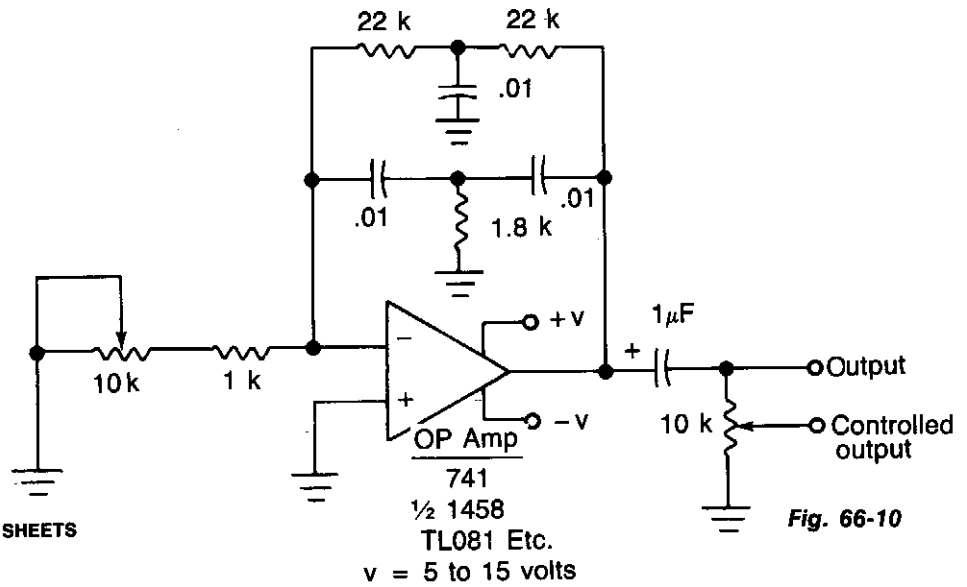

WILLIAM SHEETS

Fig. 66-10

Circuit Notes

If fine output control is desired, add the 10 K potentiometer. When the oscillator is connected to a dc circuit then connect a dc blocking capacitor in series with the potentiometer's wiper arm.

INEXPENSIVE OSCILLATOR IS TEMPERATURE STABLE

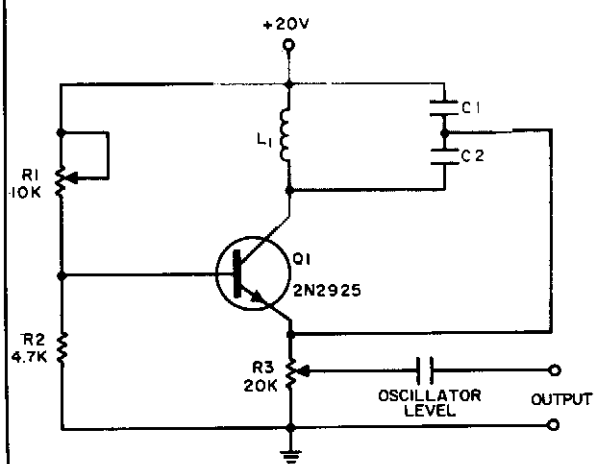

ELECTRONIC DESIGN

Fig. 66-11

Circuit Notes

The Colpitts sinusoidal oscillator provides stable output amplitude and frequency from 0°F to +150°F. In addition, output amplitude is large and harmonic distortion is low. Oscillation is sustained by feedback from the collector tank circuit to the emitter. The oscillator's frequency is determined by:

$$f = \frac{1}{2\pi \sqrt{\frac{L1C1C2}{C1 + C2}}}$$

Potentiometer R3 is an output level control. Control R1 may be used to adjust base bias for maximum-amplitude output. The circuit was operated at 50 kHz with L1 = 10mH, C1 = 3500 pF, and C2 = 1500 pF.

CODE PRACTICE OSCILLATOR

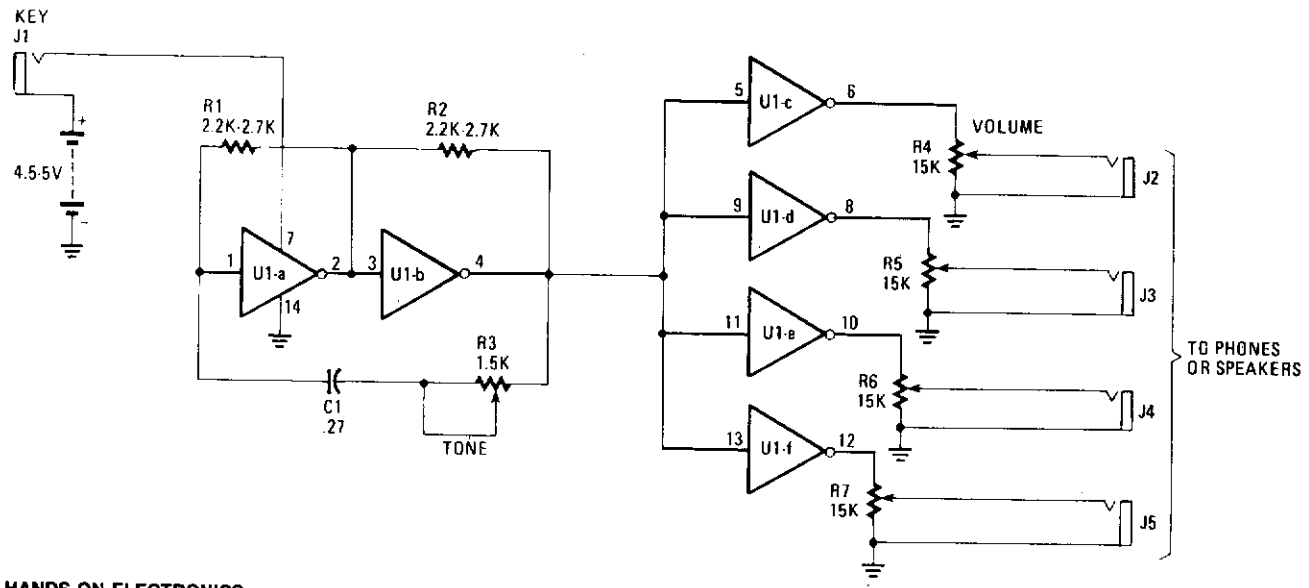

Fig. 66-12

Circuit Notes

The inexpensive 7404 hex-inverter has enough amplification to handle a wide range of transducers. Closing the key completes the battery circuit and applies four to five volts to the 7404. Bias for the first two inverter amps (U1a and U1b) comes from the two resistors, R1 and R2, connected between their inputs and outputs. The capacitor and rheostat (R3/C1) close the feedback loop from the input to the properly-phased output. The signal leaving U1b drives the remaining four inverter amplifiers, U1c through U1f; they, in turn, drive the phones or speakers. The volume control potentiometers, R4-R7, may have any value from 1500 ohms to 10,000 ohms. The smaller values work best when speakers, or low impedance phones, are used.

WIDE RANGE VARIABLE OSCILLATOR

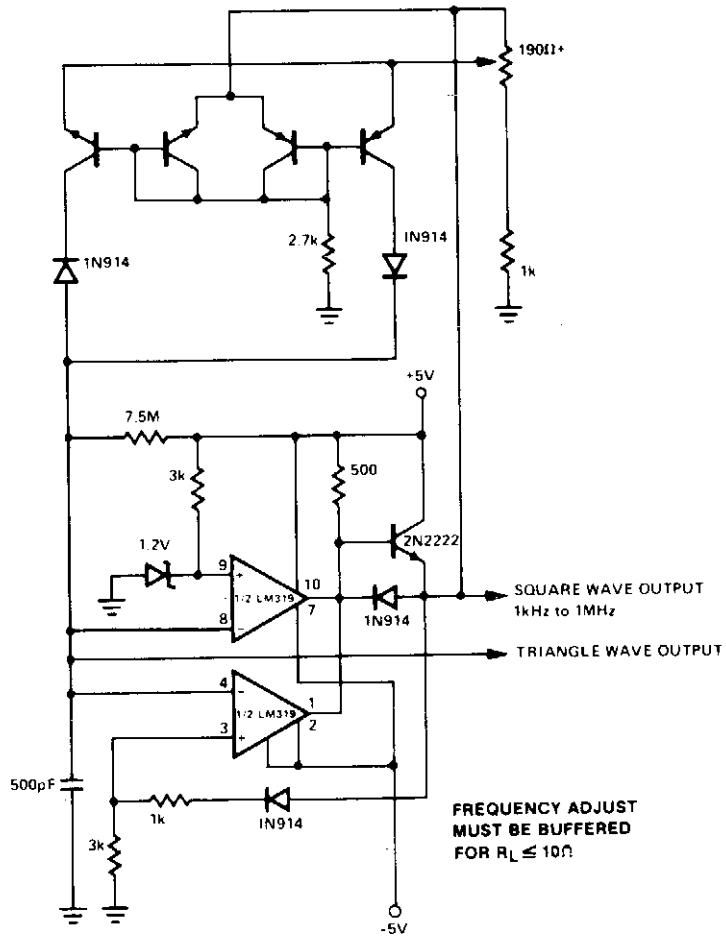

SIGNETICS

Fig. 66-13

67

Oscilloscope Circuits

The sources of the following circuits are contained in the Sources section beginning on page 694. The figure number contained in the box of each circuit correlates to the source entry in the Sources section.

Analog Multiplexer Converts Single-Trace Scope to Four-Trace
FET Dual-Trace Scope Switch
Scope Calibrator

ANALOG MULTIPLEXER CONVERTS SINGLE-TRACE SCOPE TO FOUR-TRACE

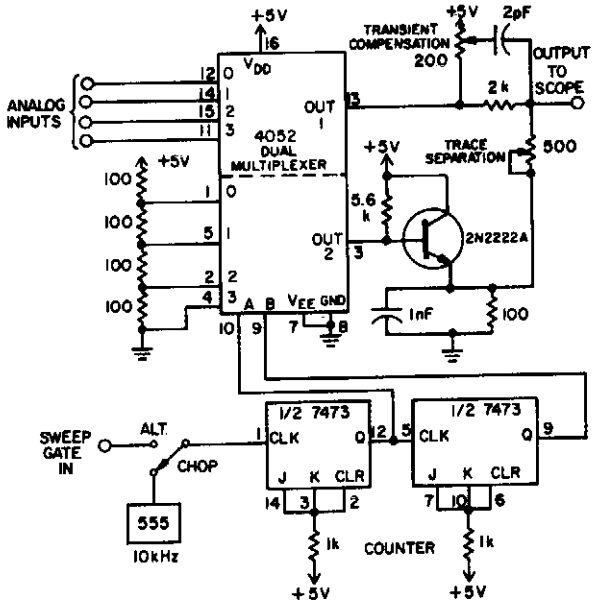

ELECTRONIC DESIGN

Fig. 67-1

Circuit Notes

This adapter circuit, based on a dual four-channel analog multiplexer handles digital signals to at least 1 MHz, and analog signals at least through the audio range. The dual multiplexer's upper half selects one input for display. The lower half generates a staircase to offset the baselines of each channel, keeping them separate on the screen. The emitter-follower buffers the staircase, which is then summed with the selected signal. A two-bit binary counter addresses the CMOS 4052 multiplexer.

FET DUAL-TRACE SCOPE SWITCH

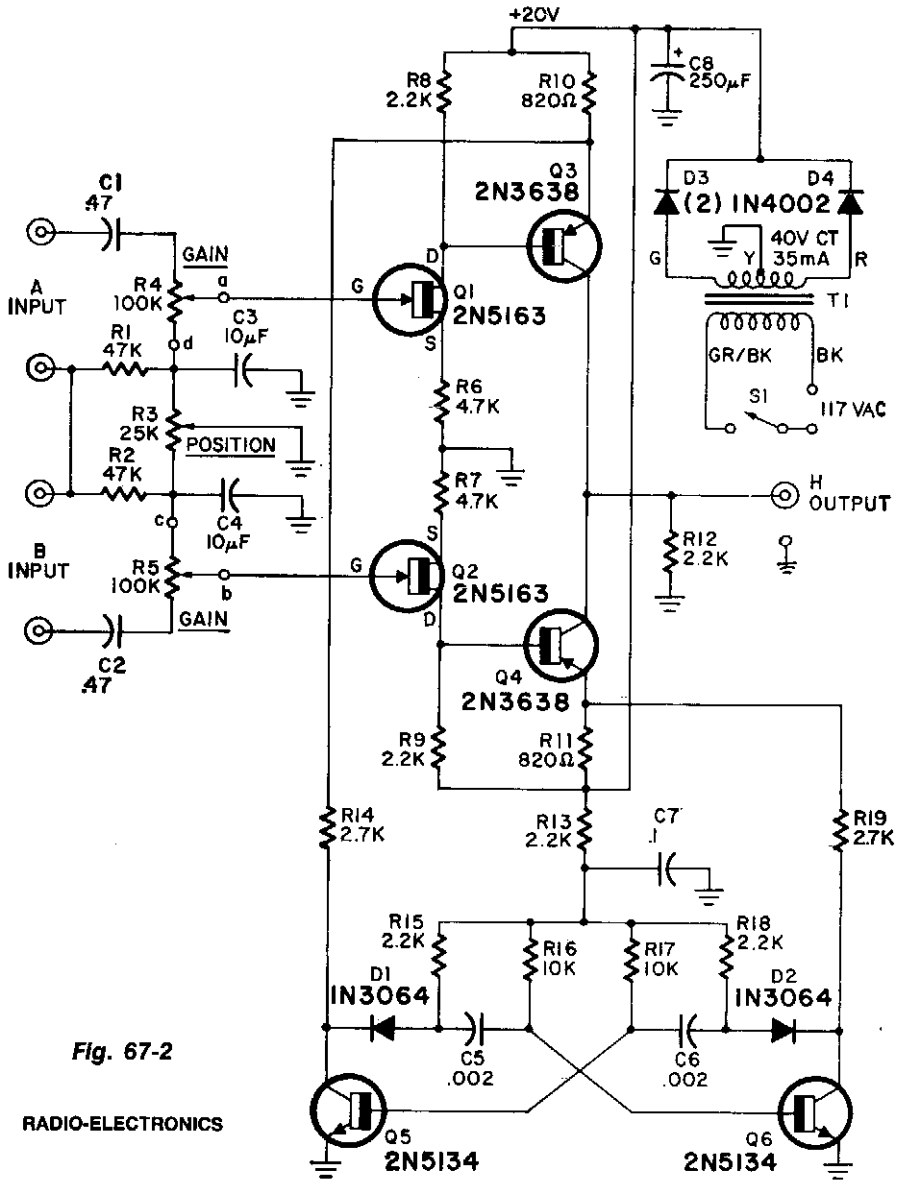

Fig. 67-2

RADIO-ELECTRONICS

Circuit Notes

The switcher output goes to the single vertical input of the scope, and a sync line from one of the inputs is taken to the scope's external-sync input. Frequency response of the input amplifiers is 300 kHz over the range of the gain controls. With the gain controls wide open so no attenuation of the signal takes place, the frequency response is up to 1 MHz.

SCOPE CALIBRATOR

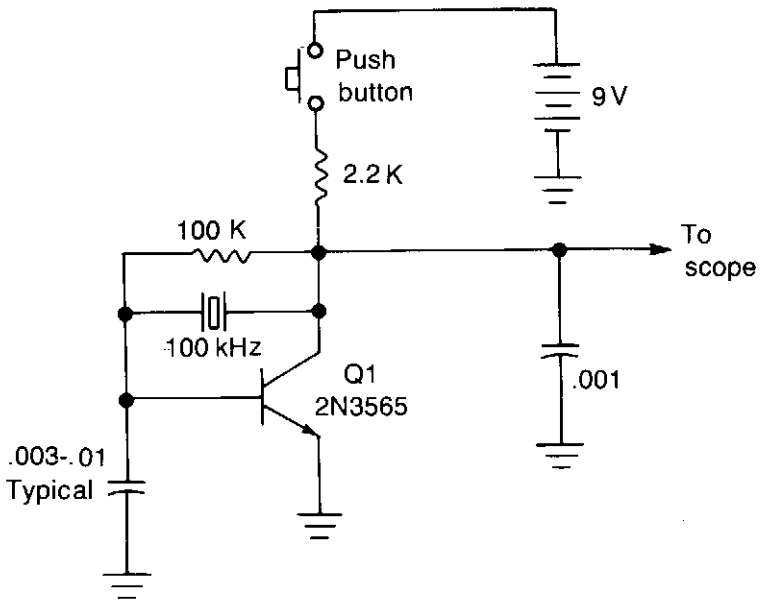

WILLIAM SHEETS

Fig. 67-3

Circuit Notes

The calibrator operates on exactly 100 kHz providing a reference for calibrating the variable time base oscillator of general purpose scopes. For example, if the scope is set so that one cycle of the signal fills exactly 10 graticule divisions then each division represents 1 MHz, or 1 microsecond. If the scope is adjusted for 10 cycles on 10 graticule divisions. (1 cycle per division) then each division represents 100 kHz or 10 microseconds.

68

Peak Detector Circuits

The sources of the following circuits are contained in the Sources section beginning on page 694. The figure number contained in the box of each circuit correlates to the source entry in the Sources section.

Positive Peak Detector
Peak Detector

POSITIVE PEAK DETECTOR

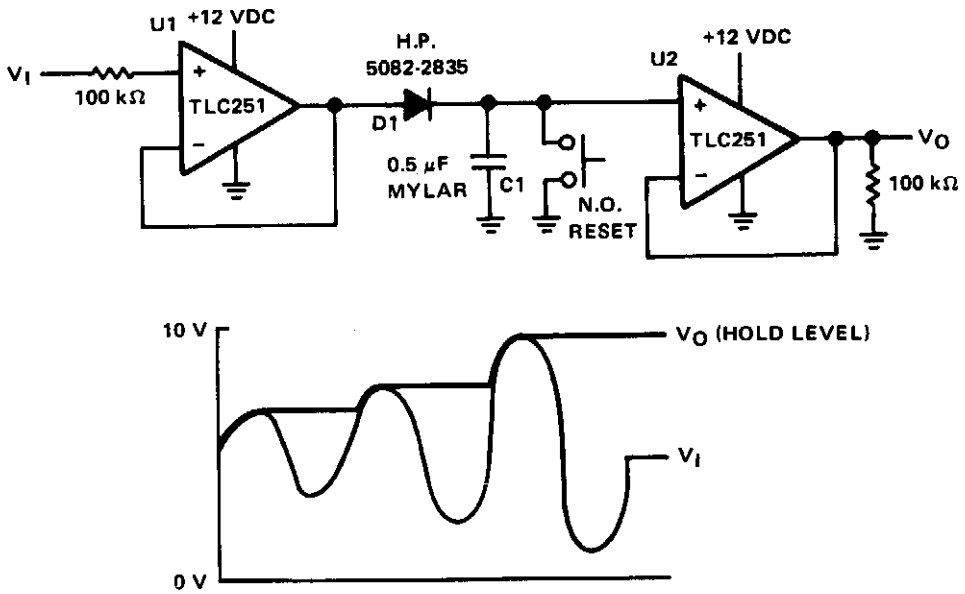

TEXAS INSTRUMENTS

Fig. 68-1

Circuit Notes

The purpose of the circuit is to hold the peak of the input voltage on capacitor C1, and read the value, V_O, at the output of U2. Op amps U1 and U2 are connected as voltage followers. When a signal is applied to V_I, C1 will charge to this same voltage through diode D1. This positive peak voltage on C1 will maintain V_O at this level until the capacitor is reset (shorted). Of course, higher positive peaks will raise this level while lower power peaks will be ignored. C1 can be reset manually with a switch, or electronically with an FET that is normally off. The capacitor specified for C1 should have low leakage and low dielectric absorption. Diode D1 should also have low leakage. Peak values of negative polarity signals may be detected by reversing D1.

PEAK DETECTOR

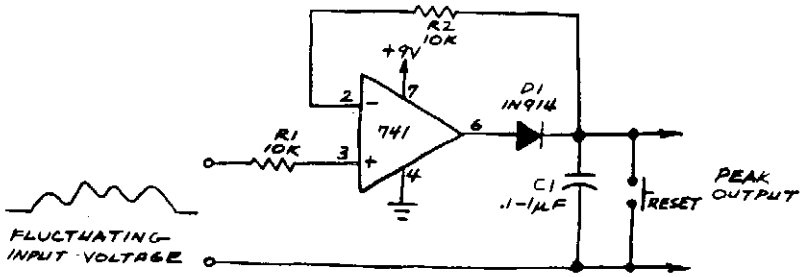

POPULAR ELECTRONICS

Fig. 68-2

Circuit Notes

The comparator will charge C1 until the voltage across the capacitor equals the input voltage. If subsequent input voltage exceeds that stored in C1, the comparator voltage will go high and charge C1 to new higher peak voltage.

69

Phase Sequence Circuits

The sources of the following circuits are contained in the Sources section beginning on page 694. The figure number contained in the box of each circuit correlates to the source entry in the Sources section.

RC Circuit Detects Phase Sequence Reversal
Phase Indicator
Phase Sequence Detector
Three Phase Tester
Phase Sequence Detector II
Simple Phase Detector Circuit

RC CIRCUIT DETECTS PHASE SEQUENCE REVERSAL

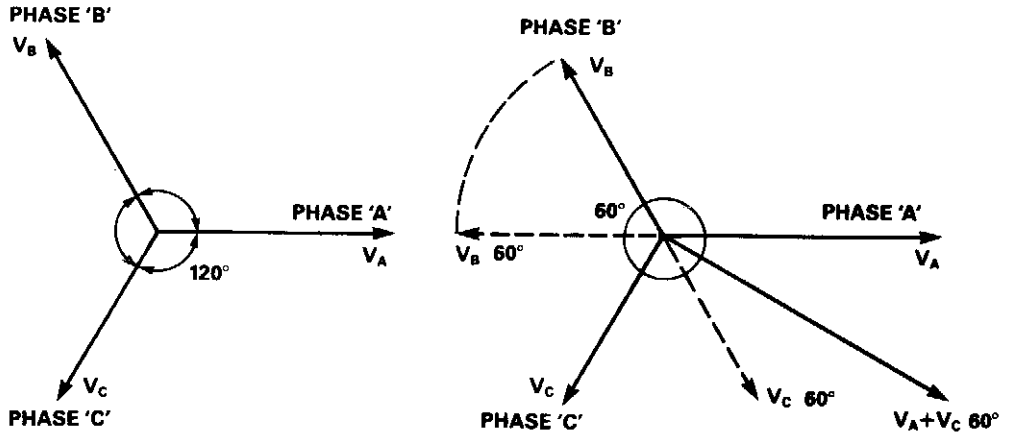

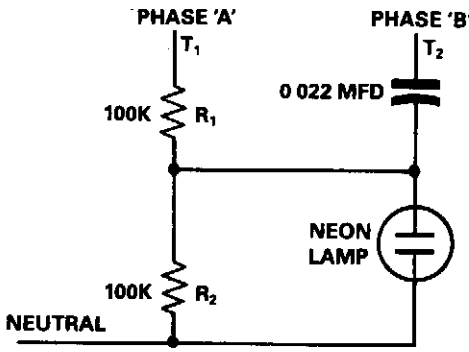

TABLE

PHASE SEQUENCE	NEON INDICATOR	MOTOR MOTION
$V_A V_B V_C$	OFF	FORWARD
$V_A V_C V_B$	ON	REVERSE
$V_B V_A V_C$	ON	REVERSE
$V_B V_C V_A$	OFF	FORWARD
$V_C V_A V_B$	OFF	FORWARD
$V_C V_B V_A$	ON	REVERSE

ELECTRONIC ENGINEERING

Fig. 69-1

Circuit Notes

Assume the correct phase sequence to be V_A-V_B-V_C. The circuit terminals are connected such that T1 gets connected to phase A and T2 to phase B. The capacitor advances the voltage developed across R2 due to phase "B" by ~ 60°, while the voltages developed across it by phase "A" is in phase with V_A as shown in Fig. 69-1. The net voltage developed across R2 ~ zero, the neon lamp is not energized, thereby signaling correct phase sequence. If terminal T2 gets connected to phase C, a large voltage, $K(V_A + V_C\ 60°)$, gets developed across R2, energizing the neon indicator to signal reverse phase sequence.

The motor terminals can be connected to the three phases in six different combinations. A three-phase motor will run in the forward direction for three such combinations, while for the other three it will operate in the reverse direction. As shown in the table, the circuit detects all three reverse combinations. This circuit can be wired into any existing motor starter where the operator can see whether the phase sequence has been altered, before starting the machine.

PHASE INDICATOR

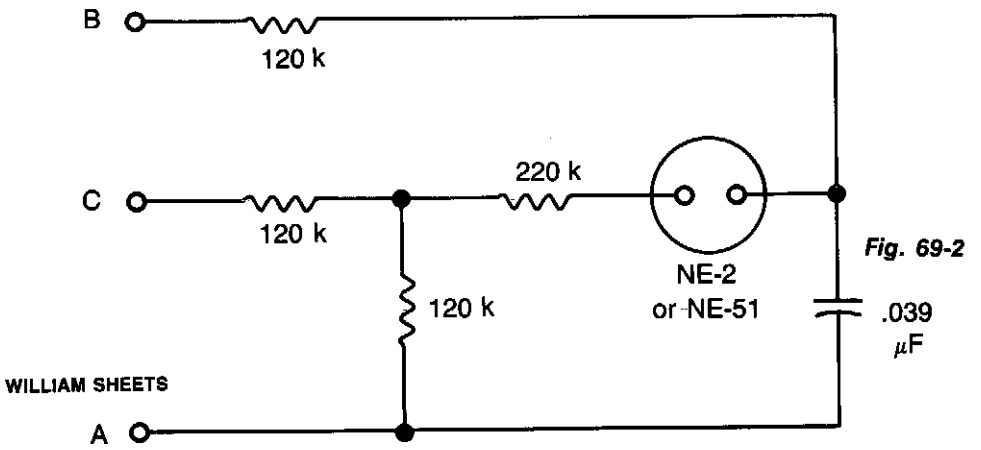

Fig. 69-2

Circuit Notes

The circuit provides a simple means of determining the succession of phases of a 3-phase 120 V source used in synchro work. Terminals A, B, and C are connected to the three terminals of the source to be checked. If the neon bulb lights, interchange any two leads; the light then extinguishes and A, B, and C indicate the correct sequence. If power on any one line is lost, the neon bulb will light. This feature may be useful for monitoring purposes.

PHASE SEQUENCE DETECTOR

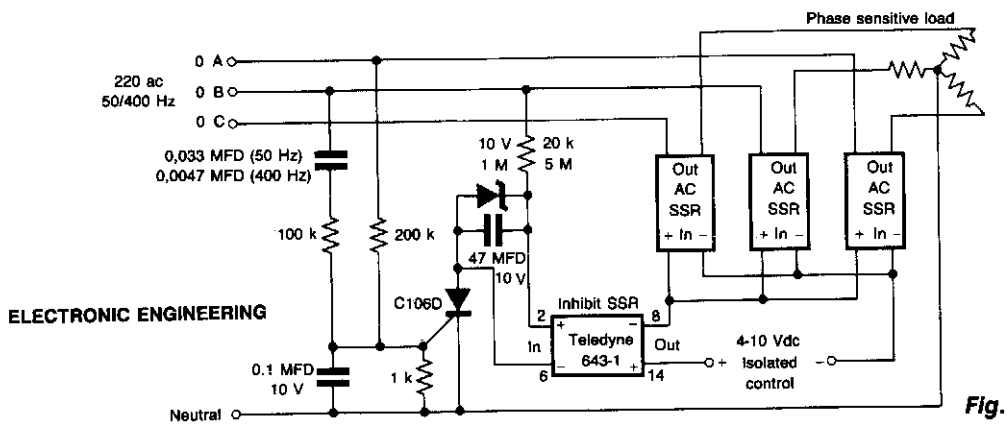

Fig. 69-3

Circuit Notes

This circuit prevents damage to the load due to incorrect phasing. The three power SSR's are only permitted to turn-on for a phase sequence of phase A leading phase B. If phase A lags phase B the input currents will cancel, causing the SCR and the inhibit SSR to remain off until the sequence is reversed. The inhibit SSR is included to maintain isolation at the input.

THREE PHASE TESTER

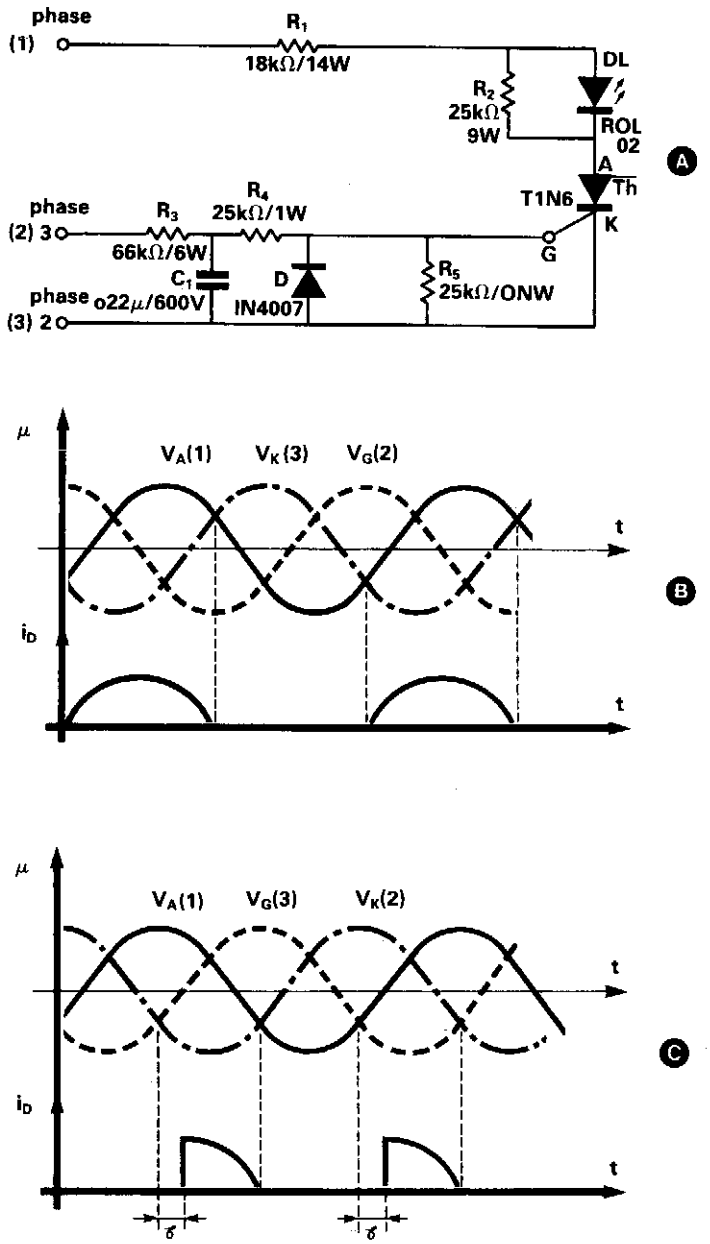

ELECTRONIC ENGINEERING

Fig. 69-4

THREE PHASE TESTER, Continued.

Circuit Notes

This simple three-phase tester, uses only a small current thyristor as a main element for testing the right or wrong succession of the three phases, and there is no need for a supplementary power supply.

The basic circuit is shown in Fig. 69-4A. When connecting to the thyristor anode, grid, and cathode the three phases of the supply network in the sequence phase 1, phase 3, phase 2, are considered as correct, the mean value of the current through the thyristor is relatively high (since it is turned on during an entire half-period of one phase). The result is that the LED will emit a normal light.

The wave shapes for the three voltages and the current through the LED for this situation are shown in Fig. 69-4B.

If the three phases are not correctly connected—phase 1 to the anode, phase 2 to the grid, and phase 3 to the cathode, for instance—the thyristor will be turned on for a very short time and the LED will produce a very poor light. The wave shapes for this case are shown in Fig. 69-4C. The delay time is given by the R3-R1-R4 group.

When any of the three phases is missing, there is no current through the thyristor and the LED will emit no light.

PHASE-SEQUENCE DETECTOR II

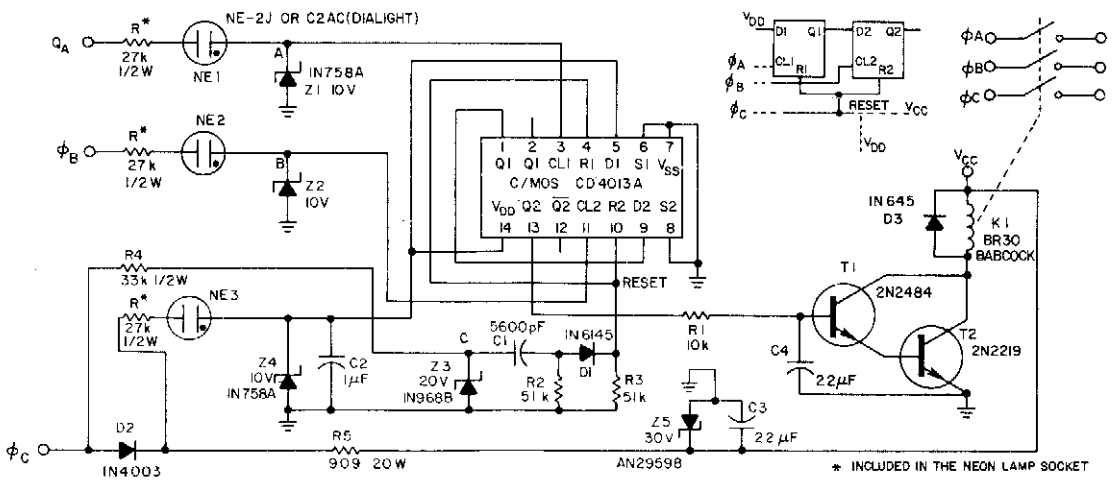

ELECTRONIC DESIGN

Fig. 69-5

Circuit Notes

This circuit derives its supply voltage, V_{cc} and V_{dd} from ϕ_c. This factor, together with the neon lamps and zener diodes in the phase inputs, establishes 50% threshold that detects low voltage or absence of one or more phases. Relay K1 energizes for correct phase volts.

SIMPLE PHASE DETECTOR CIRCUIT

Fig. 1

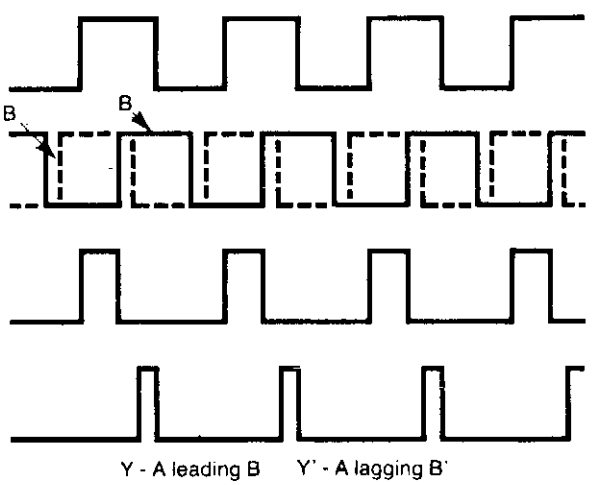

Fig. 2

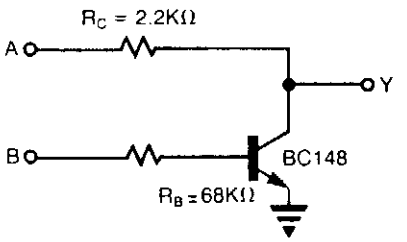

Fig. 69-6

Fig. 3

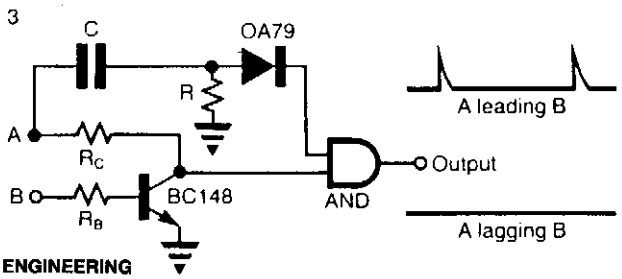

ELECTRONIC ENGINEERING

Circuit Notes

The operation of the circuit is like an enabled inverter, that is, the output Y = B provided A is high. If A is low, output is low (independent of the state of B). When the signals A and B or B1 are connected to the inputs A and B of this gate the output Y is a pulse train signal (shown a Y or Y1) which has a pulse duration equal to the phase difference between the two signals. The circuit is directly suitable for phase difference measurement from zero to 180°. This performance is similar to the circuits like the Exclusive OR gate used for this purpose. With this method leading and lagging positions of the signals can also be found using an AND gate. Phase difference measured along with the leading and lagging information gives complete information about the phases of the two signals between zero and 360°.

70

Photography-Related Circuits

The sources of the following circuits are contained in the Sources section beginning on page 694. The figure number contained in the box of each circuit correlates to the source entry in the Sources section.

Auto-Advance Projector
Shutter-Speed Tester
Enlarger Timer
Contrast Meter
Electronic Flash Trigger
Sound Trigger for Flash Unit

AUTO-ADVANCE PROJECTOR

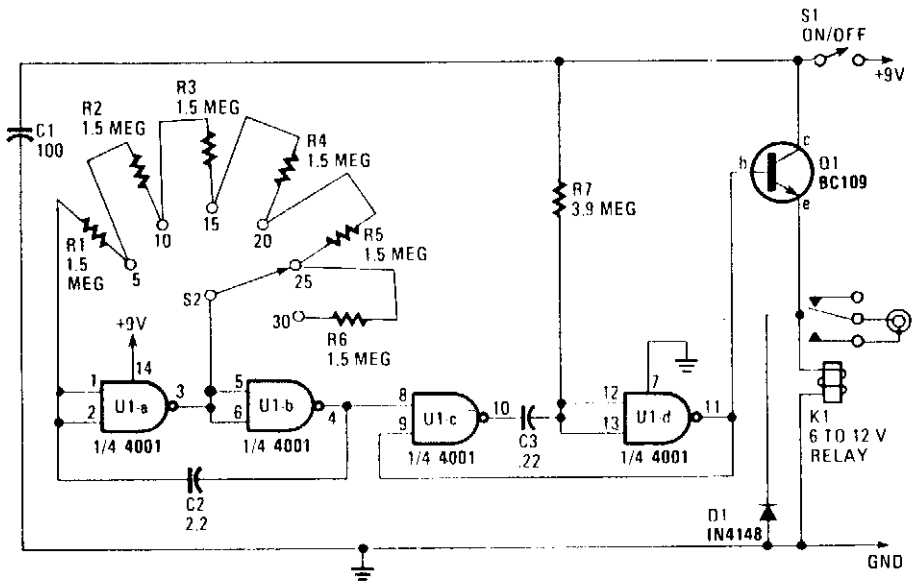

HANDS-ON ELECTRONICS

Fig. 70-1

Circuit Notes

The circuit is built around a 4001 quad two-input NOR gate, it provides switch selectable auto-advance times of 5, 10, 15, 20, 25 or 30 seconds through the remote-control socket of your projector. U1a and U1b form an astable multivibrator, with its operating frequency dependent on the number of timing resistors switched into the circuit via S2. The frequency is about one cycle for every five seconds with a single timing resistor, one every ten seconds with two resistors, etc., providing six switched time intervals. The output of the astable at pin 4 of U1b is fed to the input of a monostable multivibrator, consisting of the second pair of gates, U1c and U1d. R7 and C3 are the timing components; they set the length of the (positive) output pulse of the monostable at a little more than half a second. The monostable is triggered by each positive-going input it receives from the astable. The output from the monostable therefore, consists of a series of short pulses, the interval between the pulses being controlled using S2. The output of the monostable (at pin 11) controls a relay by way of Q1, which is configured as an emitter-follower buffer stage. The projector is controlled via the normally-open contacts of relay K1. When the output of the monostable goes positive, the relay contacts close, triggering the slide-change mechanism of the projector. The monostable assures that the power to the relay is applied only briefly by the timer, so that multiple operation of the projector is avoided.

SHUTTER-SPEED TESTER

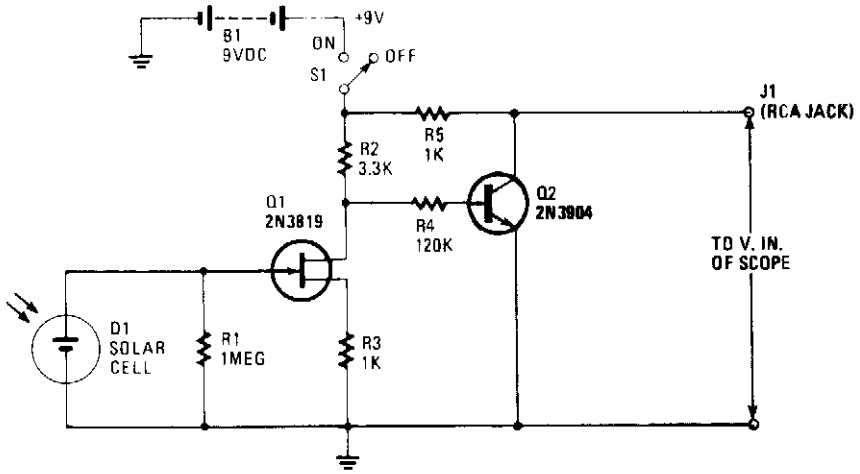

HANDS-ON ELECTRONICS

Fig. 70-2

Circuit Notes

The solar cell is connected across the input of the FET (field-effect transistor), Q1, so that it will produce positive dc voltage to the gate when activated by light shining through the open shutter, decreasing the negative gate-source bias already established by the source resistor, and causes an increase in drain current. The drain voltage goes more negative which causes a decrease in Q2's base current. Q2's collector current decreases, and its collector voltage becomes more positive. There is an amplified positive-going voltage output at the collector, and it's applied directly to the oscilloscope's vertical input, producing a waveform that is displaced vertically whenever light strikes the cell.

ENLARGER TIMER

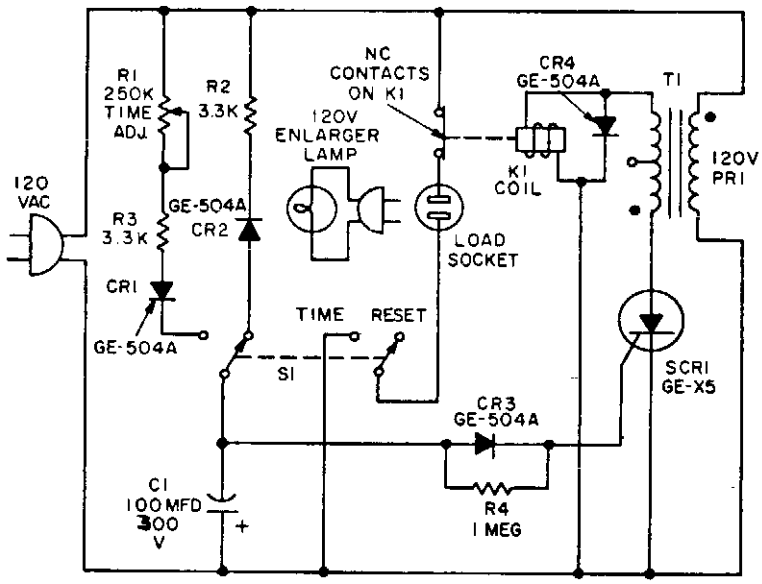

Parts List

C1 — 100-mfd, 300-volt electrolytic capacitor
CR1 thru CR4 — GE-504A rectifier diode
K1 —12 -volt a-c relay (Potter & Brumfield No. MR5A, or equivalent)
R1 — 250K-ohm, 2-watt potentiometer
R2, R3 — 3.3K-ohm, 1/2-watt resistor
R4 — 1-megohm, 1/2-watt resistor
S1 — DPDT toggle switch
SCR1 — GE-X5 silicon controlled rectifier
T1 — Filament transformer: primary, 120-volts a-c; secondary, 12.6-volts center tapped (Triad F25X, or equivalent)
Line cord, vectorboard, minibox etc.

GENERAL ELECTRIC

Fig. 70-3

Circuit Notes

This precision, solid state, time delay circuit has delayed *off* and delayed *on* switching functions that are interchangeably available by simply interchanging the relay contacts.

CONTRAST METER

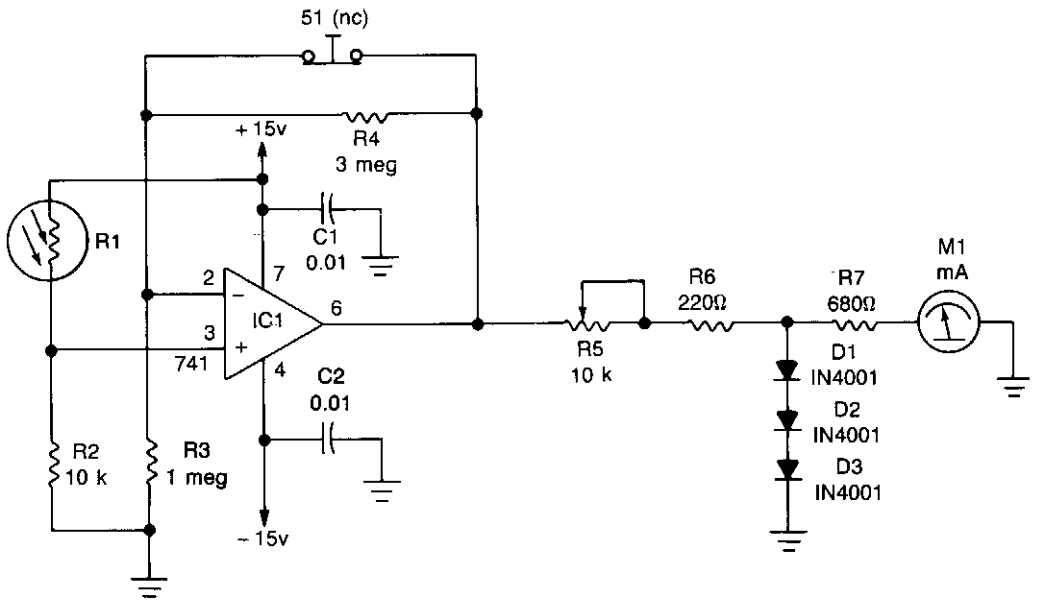

RADIO ELECTRONICS

Fig. 70-4

Circuit Notes

One leg of the photocell (R1) is tied to the +15 volt supply and the other end is connected to ground through resistor R2, forming a voltage-divider network. The non-inverting input of the 741 op amp, IC1, is tied to the junction formed by R1 and R2, while its inverting input is grounded through resistor R3. When switch S1 is pressed, another divider network is formed, reducing the voltage applied to the inverting input of the op amp. When light hits the photocell its resistance begins to decrease causing a greater voltage drop across R2 and a higher voltage to be presented to the non-inverting input of IC1. This causes IC1 to output a voltage proportional to the two inputs. The circuit gives a meter reading that depends on the intensity of light hitting photocell R1; therefore, R1 should be mounted in a bottle cap so that the light must pass through a 3/16 inch hole. Potentiometer R5 is used to adjust the circuit for the negative you're working with.

ELECTRONIC FLASH TRIGGER

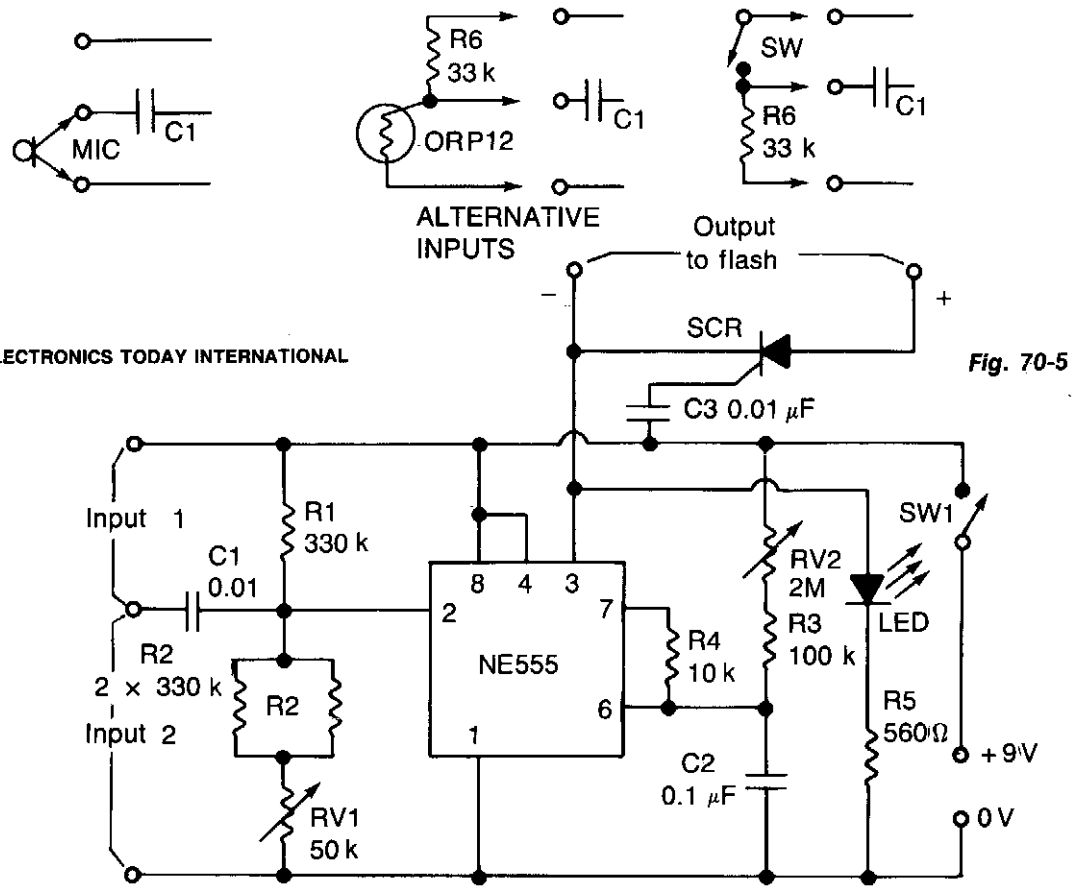

ELECTRONICS TODAY INTERNATIONAL

Fig. 70-5

Circuit Notes

A negative pulse at the input is fed via capacitor C1 to the input pin (2) of the IC. Pin 2 is held slightly above its triggering voltage of 1/3 V_{cc} by the voltage divider comprising R1, R2 and RV1. The negative pulse triggers the IC and the output (pin 3) goes high for a time period controlled by RV2, R3 and C2. When the output goes low again at the end of the time interval, capacitor C3 charges through the gate cathode circuit of the SCR switching it on and firing the flash. Capacitor C1 isolates the input from the voltage divider so that the unit isn't sensitive to the dc level at the input. RV1 acts as a sensitivity control by allowing the voltage to be adjusted to a suitable level so that the input signal will trigger the IC. Resistor R4 limits the discharge current from C2 at the end of the timing cycle protecting the IC. The LED and its protective resistor R5 act as an indicator to show that the unit has triggered, simplifying the setting up process and minimizing the number of times the strobe has to be fired. This means that the strobe needn't be fired until a photo is to be taken.

SOUND TRIGGER FOR FLASH UNIT

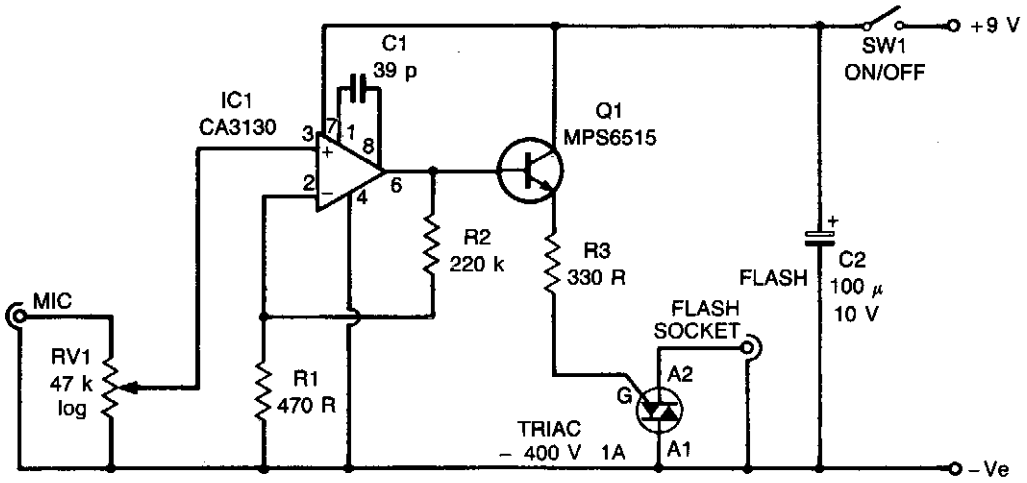

ELECTRONICS TODAY INTERNATIONAL

Fig. 70-6

Circuit Notes

The circuit is based on operational amplifier IC1 used in the noninverting amplifier mode. R1 and 2 set the gain at about 500. RV1 (sensitivity) biases the noninverting input to the negative supply. Q1 provides the relatively high trigger current required by the triac. When a signal is received by the microphone, the signals are amplified (by IC1). The triac is triggered and a low resistance appears across its A1 and A2 terminals which are connected via the flashlead to the strobe. The circuit operates almost instantly, giving very little delay between the commencement of the sound and the flashgun being triggered.

71

Power Amplifiers

The sources of the following circuits are contained in the Sources section beginning on page 694. The figure number contained in the box of each circuit correlates to the source entry in the Sources section.

2 To 6 W Audio Amplifier with Preamplifier
Audio Power Amplifier
25 Watt Amplifier
Bull Horn
Low Power Audio Amplifier
Audio Booster
Walkman Amplifier
Rear Speaker Ambience (4-Channel) Amplifier
90 W Audio Power Amplifier with Safe Area Protection
Power Amplifier

2 TO 6 W AUDIO AMPLIFIER WITH PREAMPLIFIER

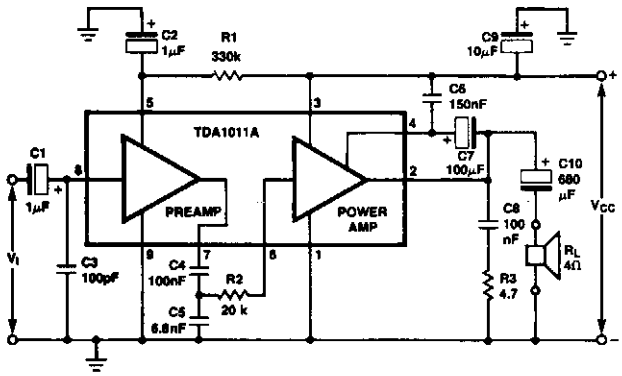

SIGNETICS

Fig. 71-1

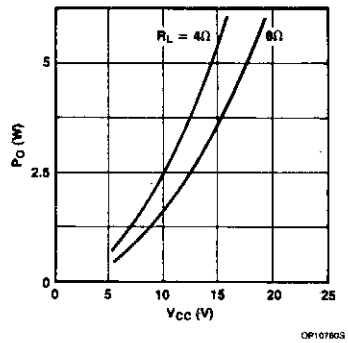

NOTES:
d_{TOT} = 10%; typical values. The available output power is 5% higher when measured at Pin 2 (due to series resistance of C1). *

Output Power Across R_L as a Function of Supply Voltage with Bootstrap

Circuit Notes

The monolithic integrated audio amplifier circuit is especially designed for portable radio and recorder applications and delivers up to 4 W in a 4 ohm load impedance.

AUDIO POWER AMPLIFIER

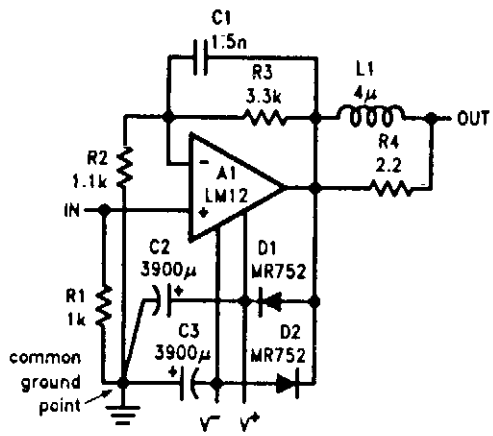

NATIONAL SEMICONDUCTOR CORP.

Fig. 71-2

Circuit Notes

Output-clamp diodes are mandatory because loudspeakers are inductive loads. Output LR isolation is also used because audio amplifiers are usually expected to handle up to 2 μF load capacitance. Large, supply-bypass capacitors located close to the IC are used so that the rectified load current in the supply leads does not get back into the amplifier, increasing high-frequency distortion. Single-point grounding for all internal leads plus the signal source and load is recommended to avoid ground loops that can increase distortion.

25 WATT AMPLIFIER

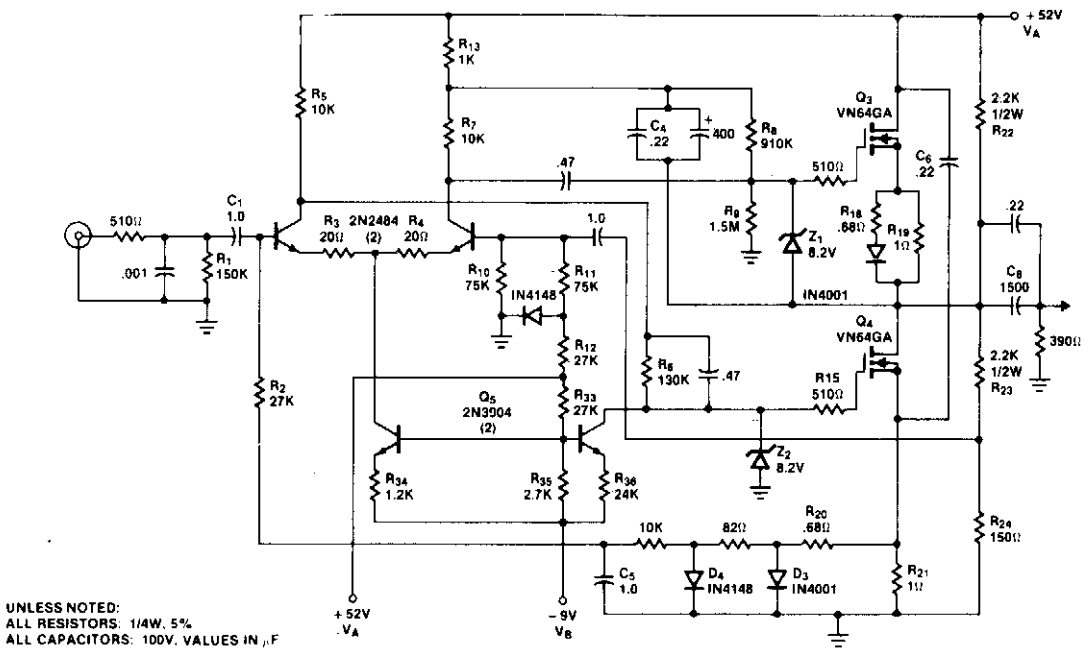

SILICONIX, INC.

Fig. 71-3

Circuit Notes

Transistors are used for current sources. Base drive for these transistors is derived from the main power supply V_A, so that their collector current is proportional to the rail voltage. This feature holds the voltage on the diff-amp collectors close to $V_A/2$. The sensitivity of I_Q to V_A is about 3.4 mA/volt when V_B is held constant; the sensitivity of I_Q to V_B is -15 mA/volt when V_A is held constant. In a practical amplifier with a non-regulated supply, variations in power output will cause fluctuations in V_A, but will not affect V_B; therefore, having I_Q increase slightly with power output will tend to compensate for the 3.4 mA/volt I_QV_A sensitivity. In the case of line voltage variations, since V_A is about five times V_B, the sensitivities tend to cancel, leaving a net sensitivity of about 2 mA/volt.

BULL HORN

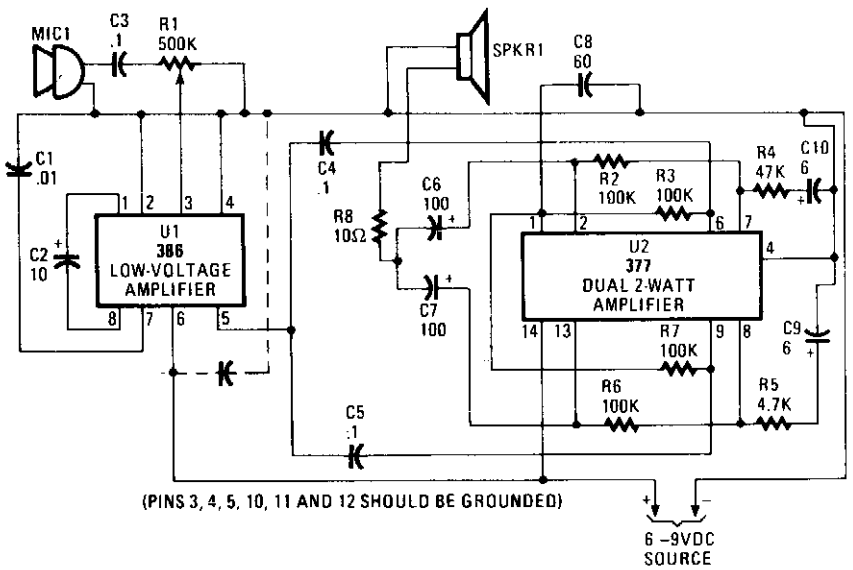

HANDS-ON ELECTRONICS

Fig. 71-4

Circuit Notes

The input audio signal is fed to pin 3 of U1, an LM386 low-voltage amplifier, via C3 and R1. Potentiometer R1 sets the drive or volume level. U1, which serves as a driver stage, can be set for a gain of from 20 to 200. The output of U1 at pin 5 is fed to U2—a 377 dual two-watt amplifier connected in parallel to produce about four watts of output power—at pins 6 and 9 via C4 and C5. Frequency stability is determined by R2, R4, and C10 on one side, and the corresponding components R6, R5, and C9 on the other side. The outputs of the two amplifiers (at pins 2 and 13) are capacitively coupled to SPKR1 through C6 and C7.

LOW POWER AUDIO AMPLIFIER

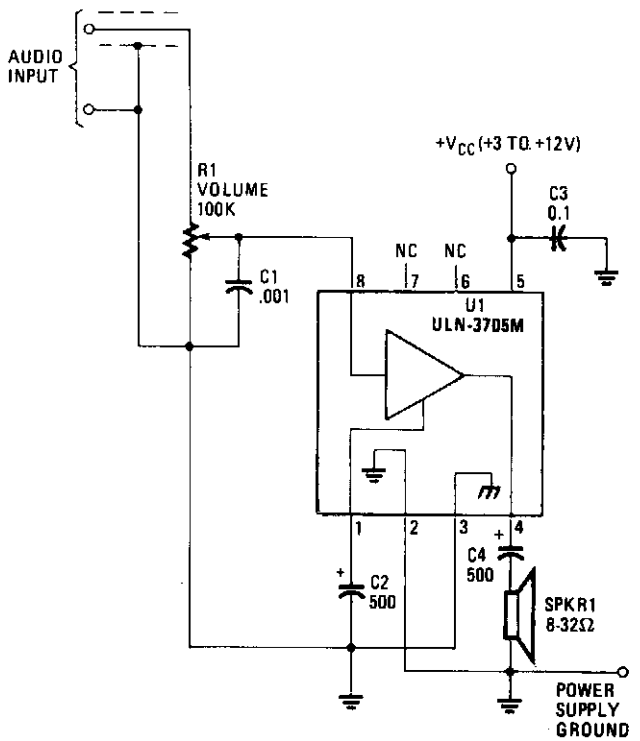

HANDS-ON ELECTRONICS

Fig. 71-5

Circuit Notes

The amplifier operates from supplies ranging up to 12 volts, and operates (with reduced volume) from supply voltages as low as 1.8 volts without having distortion rise to unacceptable levels. (Its power requirements make it suitable for solar-cell application.) Components external to the integrated circuit, U1, consist of four capacitors and a potentiometer for volume control. Capacitor C3 is for decoupling, low-frequency roll-off, and power-supply ripple rejection. Capacitor C4 is an electrolytic type that couples the audio output to an 8 to 32 ohm speaker that is efficient.

AUDIO BOOSTER

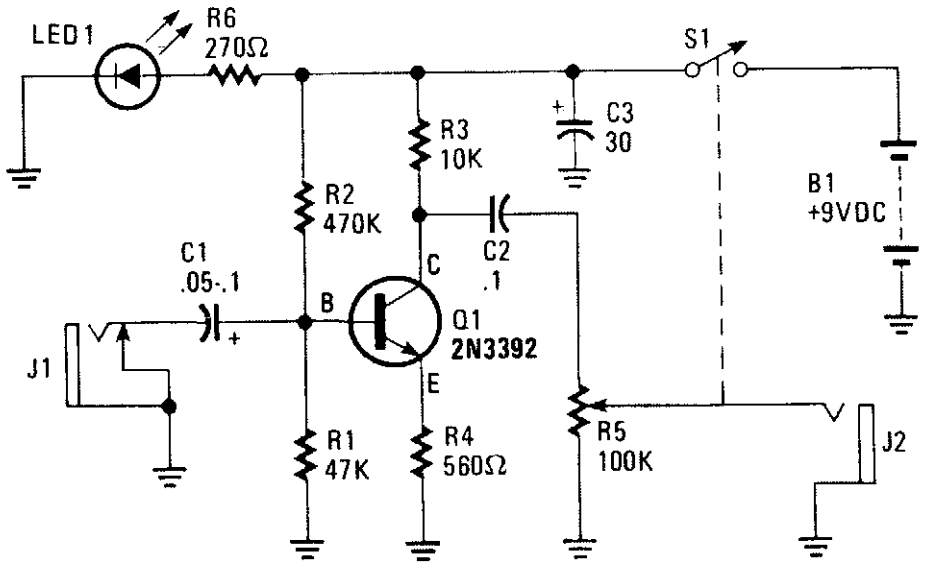

HANDS-ON ELECTRONICS

Fig. 71-6

Circuit Notes

The amplifier's gain is nominally 20 dB. Its frequency response is determined primarily by the value of just a few components—primarily C1 and R1. The values of the schematic diagram provide a response of ±3.0 dB from about 120 Hz to better than 20,000 Hz. Actually, the frequency response is ruler flat from about 170 Hz to well over 20,000 Hz; it's the low end that deviates from a flat frequency response. The low end's roll-off is primarily a function of capacitor C1 (since R1's resistive value is fixed). If C1's value is changed to 0.1 μF, the low end's corner frequency—the frequency at which the low-end roll-off starts—is reduced to about 70 Hz. If you need an even deeper low-end roll-off, change C1 to a 1.0 μF capacitor; if it's an electrolytic type, make certain that it's installed into the circuit with the correct polarity, with the positive terminal connected to Q1's base terminal.

WALKMAN AMPLIFIER

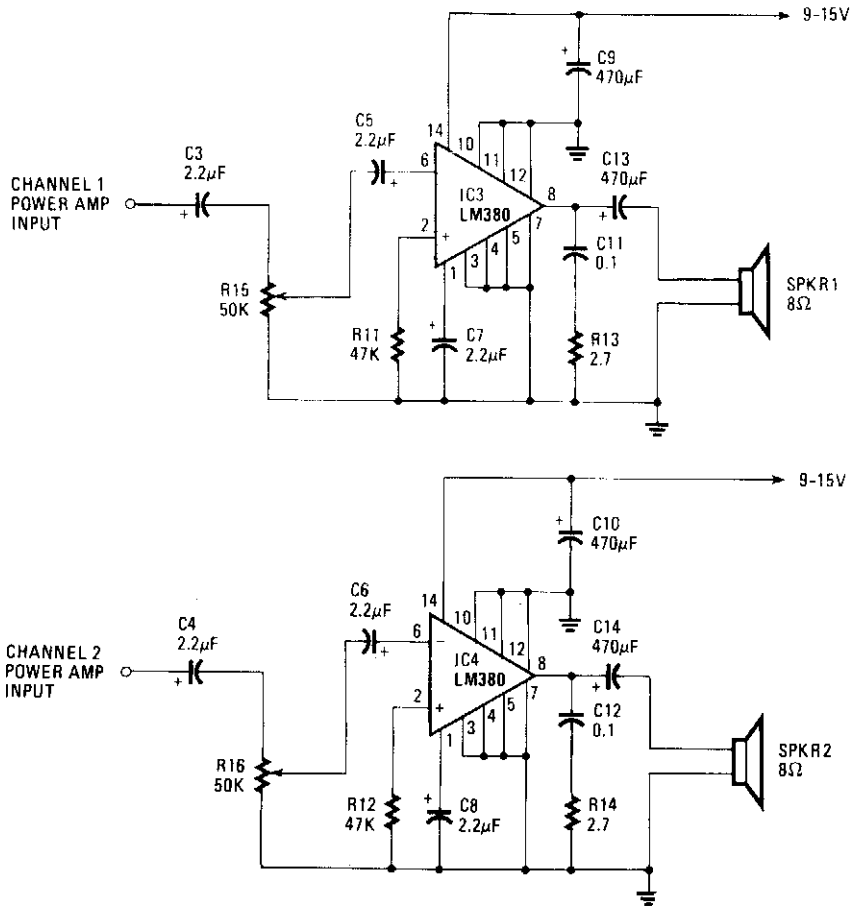

RADIO-ELECTRONICS

Fig. 71-7

Circuit Notes

The gain of the low-cost IC is internally fixed so that it is not less than 34 dB (50 times). A unique input stage allows input signals to be referenced to ground. The output is automatically self centering to one half the supply voltage. The output is also short-circuit proof with internal thermal limiting. With a maximum supply of 15 volts and an 8 ohm load, the output is around 1.5 watts per channel. The input stage is usable with signals from 50 mV to 500 mV rms. If the amplifier is to be used with a source other

WALKMAN AMPLIFIER, Continued.

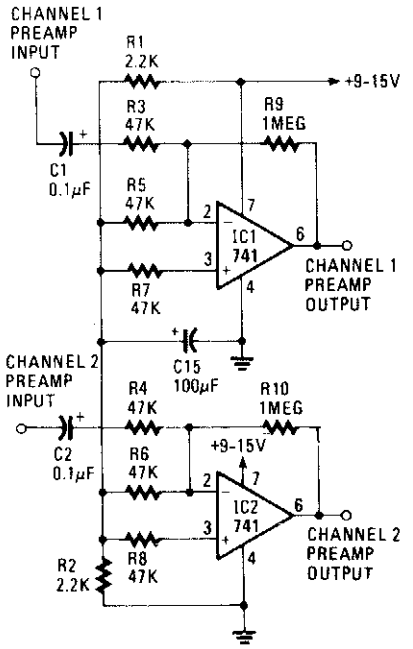

–THE PREAMP. If you wish to amplify low-level signals, such as the output of a turntable, the signal will first have to be fed to the preamp shown here.

than a personal stereo, such as a phonograph or an electric guitar, some type of preamplifier is required. A suitable circuit is shown. In that circuit, two 741 op amps have been configured as input amplifiers. Their input stages referenced to a common point—half the supply voltage. That voltage is derived from a voltage divider made up of R1 and R2, two 2.2 k resistors. The gain of each of the 741's has been fixed at 21 by the input resistors (R9, R10). Input capacitors, C1 and C2, are used to filter out any dc component from the input signal.

REAR SPEAKER AMBIENCE (4-CHANNEL) AMPLIFIER

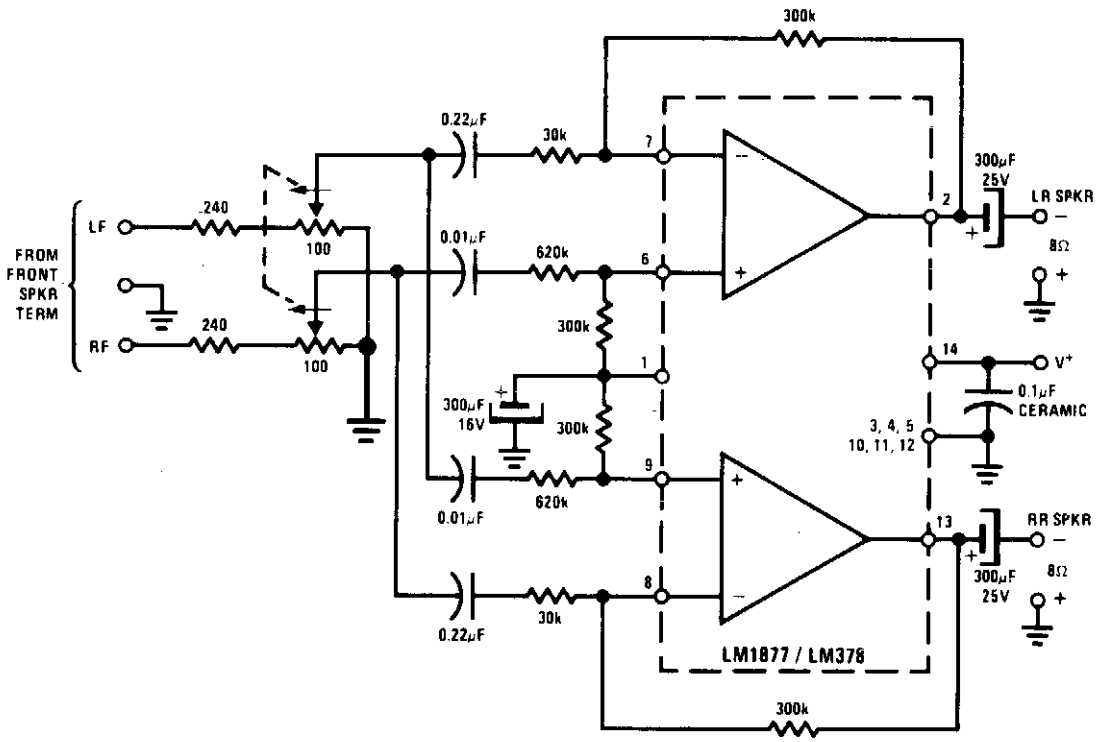

NATIONAL SEMICONDUCTOR CORP.

Fig. 71-8

Circuit Notes

Rear channel "ambience" can be added to an existing stereo system to extract a difference signal (R - L or L - R) which, when combined with some direct signal (R or L), adds fullness, or "concert hall realism" to the reproduction of recorded music. Very little power is required at the rear channels, hence an LM1877 suffices for most "ambience" applications. The inputs are merely connected to the existing speaker output terminals of a stereo set, and two more speakers are connected to the ambience circuit outputs. The rear speakers should be connected in the opposite phase to those of the front speakers, as indicated by the +/− signs.

90 W AUDIO POWER AMPLIFIER WITH SAFE AREA PROTECTION

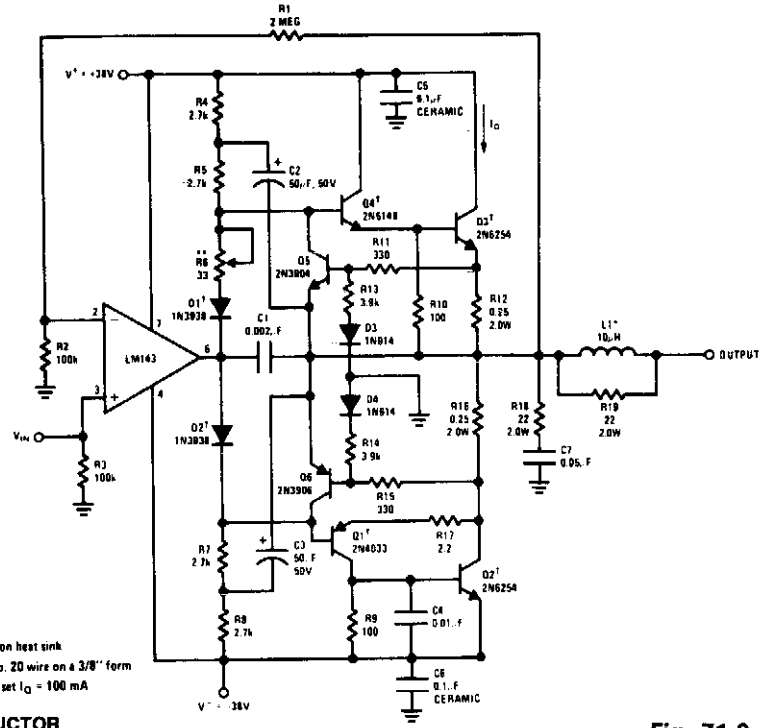

†Put on common heat sink
*34 turns of no. 20 wire on a 3/8" form
**Adjust R6 to set I_Q = 100 mA

NATIONAL SEMICONDUCTOR

Fig. 71-9

POWER AMPLIFIER

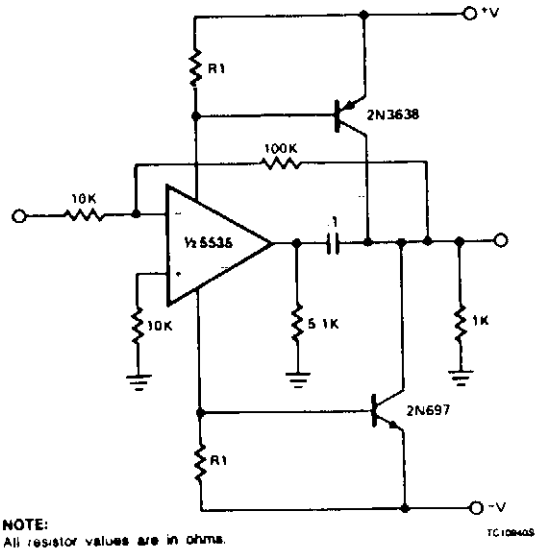

NOTE:
All resistor values are in ohms.

SIGNETICS

Fig. 71-10

Circuit Notes

For most applications, the available power from op amps is sufficient. There are times when more power handling capability is necessary. A simple power booster capable of driving moderate loads uses an NE5535 device. Other amplifiers may be substituted only if R1 values are changed because of the I_{CC} current required by the amplifier. R1 should be calculated from the expression

$$R1 = \frac{600\ mV}{I_{CC}}$$

72

Power Supply Circuits

The sources of the following circuits are contained in the Sources section beginning on page 694. The figure number contained in the box of each circuit correlates to the source entry in the Sources section.

8 Amp Regulated Power Supply for Operating Mobile Equipment
Uninterruptible Power Supply for Personal Computers
5 V Supply Including Stabilized Momentary Backup
Power-Switching Circuit
Radiation-Hardened, 125 A Linear Regulator
Switch Mode Power Supply
Micropower Bandgap Reference Supply
Variable Current Source, 100 mA to 2 Amp
Basic Single-Supply Voltage Regulator
Bench Top Power Supply
400-Volt, 60-Watt Push-Pull Power Supply
500 kHz Switching Inverter for 12 V Systems
10-Amp Regulator with Current and Thermal Protection
Bipolar Power Supply for Battery Instruments
Power Supply for 25-Watt Arc Lamp
Stand-by Power for Non-Volatile CMOS RAMs
HV Regulator with Foldback Current Limiting
90 V rms Voltage Regulator Using a PUT
12-14 V Regulated 3 A Power Supply
DC-to-DC SMPS Variable 18 V to 30 V out at 0.2 A
Off-Line Flyback Regulator
SCR Preregulator Fits Any Power Supply
Voltage Regulator
Zener Diode Increase Fixed PNP Regulator's Output Voltage Ratings
Increasing the Power Rating of Zener Diodes
Memory Save on Power-Down

8-AMP REGULATED POWER SUPPLY FOR OPERATING MOBILE EQUIPMENT

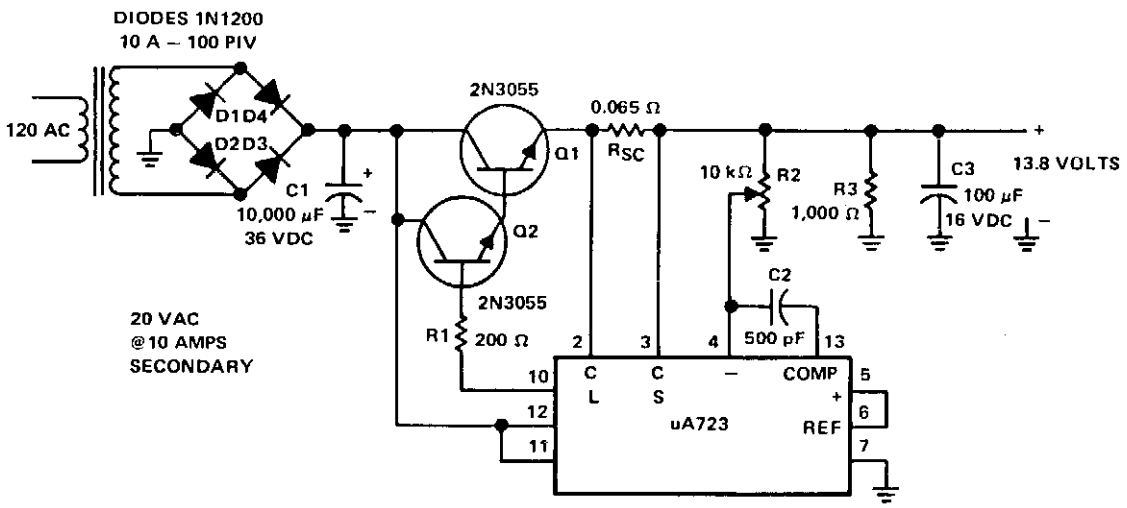

TEXAS INSTRUMENTS

Fig. 72-1

Circuit Notes

This supply is powered by a transformer operating from 120 Vac on the primary and providing approximately 20 Vac on the primary, and providing approximately 20 Vac on the secondary. Four 10-A diodes with a 100 PIV rating are used in a full-wave bridge rectifier. A 10,000 μF/36 Vdc capacitor completes the filtering, providing 28 Vdc. The dc voltage is fed to the collectors of the Darlington connected 2N3055's. Base drive for the pass transistors is from pin 10 of the μA723 through a 200 ohm current limiting resistor, R1. The reference terminal (pin 6) is tied directly to the non-inverting input of the error amplifier (pin 5), providing 7.15 V for comparison.

The inverting input to the error amplifier (pin 4) is fed from the center arm of a 10 k ohm potentiometer connected across the output of the supply. This control is set for the desired output voltage of 13.8 V. Compensation of the error amplifier is accomplished with a 500 pF capacitor connected from pin 13 to pin 4. If the power supply should exceed 8 A or develop a short circuit, the μA723 regulator will bias the transistors to cutoff and the output voltage will drop to near zero until the short circuit condition is corrected.

UNINTERRUPTIBLE POWER SUPPLY FOR PERSONAL COMPUTERS

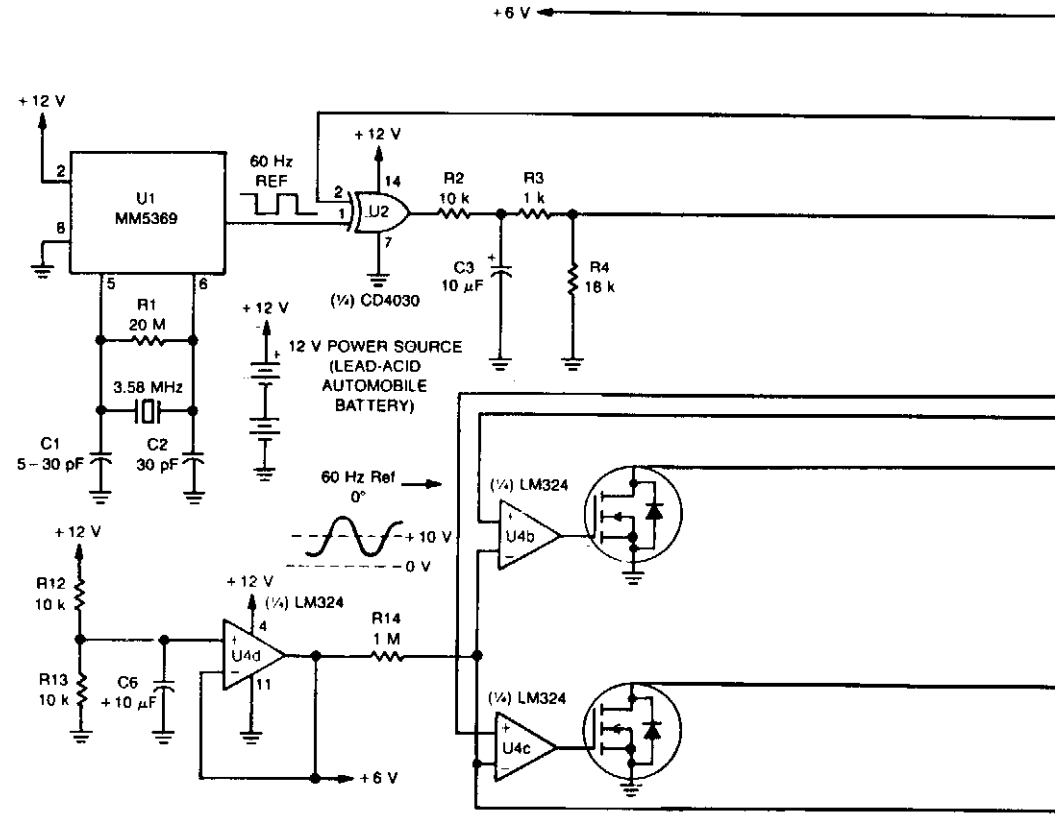

MOTOROLA

Fig. 72-2

Circuit Notes

The UPS is basically an ac inverter that is powered by a 12-V, lead-acid automobile battery. During power outages, it can supply several minutes of power for an average personal computer. It incorporates a crystal-controlled 60 Hz time base, so that a computer with a real time clock can maintain its accuracy. It isolates the ac line from the computer, so it can be used to operate sensitive electronic equipment on noisy power sources.

Two MTM60N06 Power FETs (Q1 and Q2) alternately switch current through a center-tapped 120-V to 12-V filament transformer (T1) with its primary and secondary reversed. The 120-V output is compared with a 60 Hz reference in a closed-loop configuration that maintains a constant output at optimum efficiency.

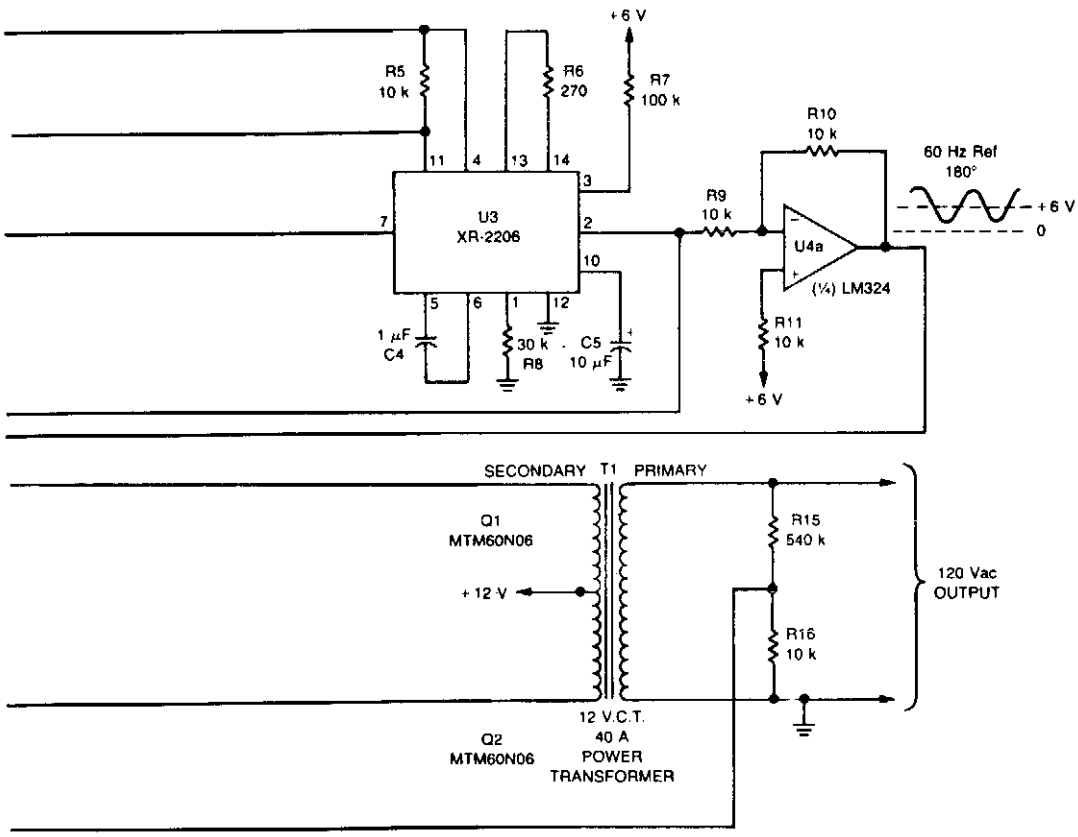

A 60 Hz reference frequency is derived from a crystal oscillator and divider circuit, U1. An inexpensive 3.58 MHz color burst crystal provides the time base that can be accurately adjusted by C1. The 60 Hz output from U1 is applied to the exclusive-OR gate, U2, and then to the XR-2206 function generator (U3) that converts the square wave into a sine wave. U2 and U3 form a phase-locked loop that synchronizes the sine wave output of U3 with the 60 Hz square wave reference of U1. The sine wave is then inverted by op amp U4a, so that two signals 180 out of phase can be applied to U4b and U4c that drive Q1 and Q2. Due to the closed-loop configuration of the drive circuits, Q1 and Q2 conduct only during the upper half of the sine wave. Therefore, one TMOS device conducts during the first half of the sine wave and the other conducts during the second half.

5 V SUPPLY INCLUDING STABILIZED MOMENTARY BACKUP

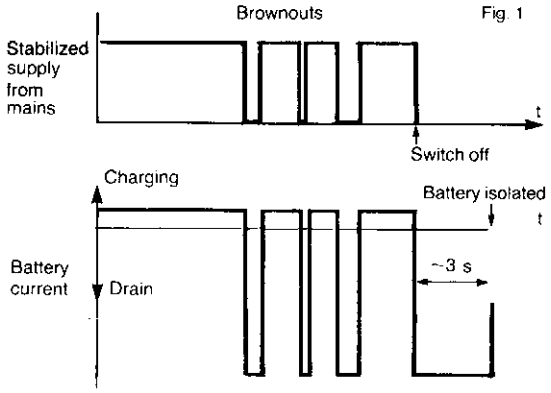

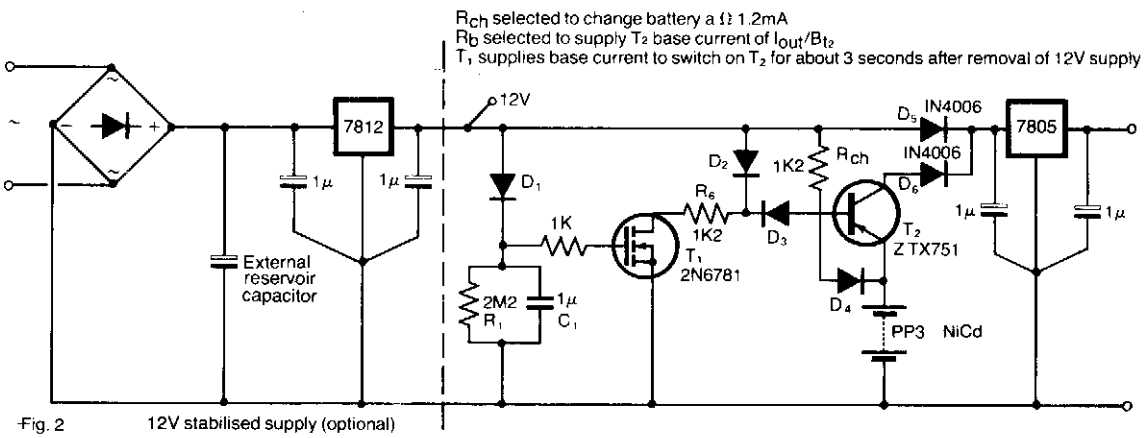

Fig. 2 12V stabilised supply (optional)

5 V SUPPLY INCLUDING STABILIZED MOMENTARY BACKUP , Continued.

Circuit Notes

This circuit protects microprocessor systems from "brownouts" without the expense of an uninterruptible power supply. Designed around a small 9-V nickel cadmium battery the circuit continues to provide a constant 5-V output during brownouts of up to a few seconds. Load currents of up to 500 mA may be drawn using the components shown. With this mains-derived supply present, D5 is forward biased so that the stabilized supply powers the 5-V regulator and hence the circuitry to be protected. FET T_1 is held on by D1, its drain current being provided from the dc supply via R_b and D2. Diode D3 is reverse-biased so that T2 is off, and the battery is isolated from D6. R_{CH} and D4 serve to trickle charge the battery with approximately 1.2 mA.

When the 12-V supply is removed, R1 and C1 initially keep T1 switched on. D3 is now forward biased, so that T1 drain current is drawn via R_b, D3 and T2 from the battery. This switches T2 on, allowing the load circuitry to draw current from the battery via D6 and the 5-V regulator. After a few seconds C1 has discharged (via R1) such that V_{gs} falls below the threshold value for the FET, and T1 switches off. There is then no path for T2 base current, so that it also switches off, isolating the battery.

POWER-SWITCHING CIRCUIT

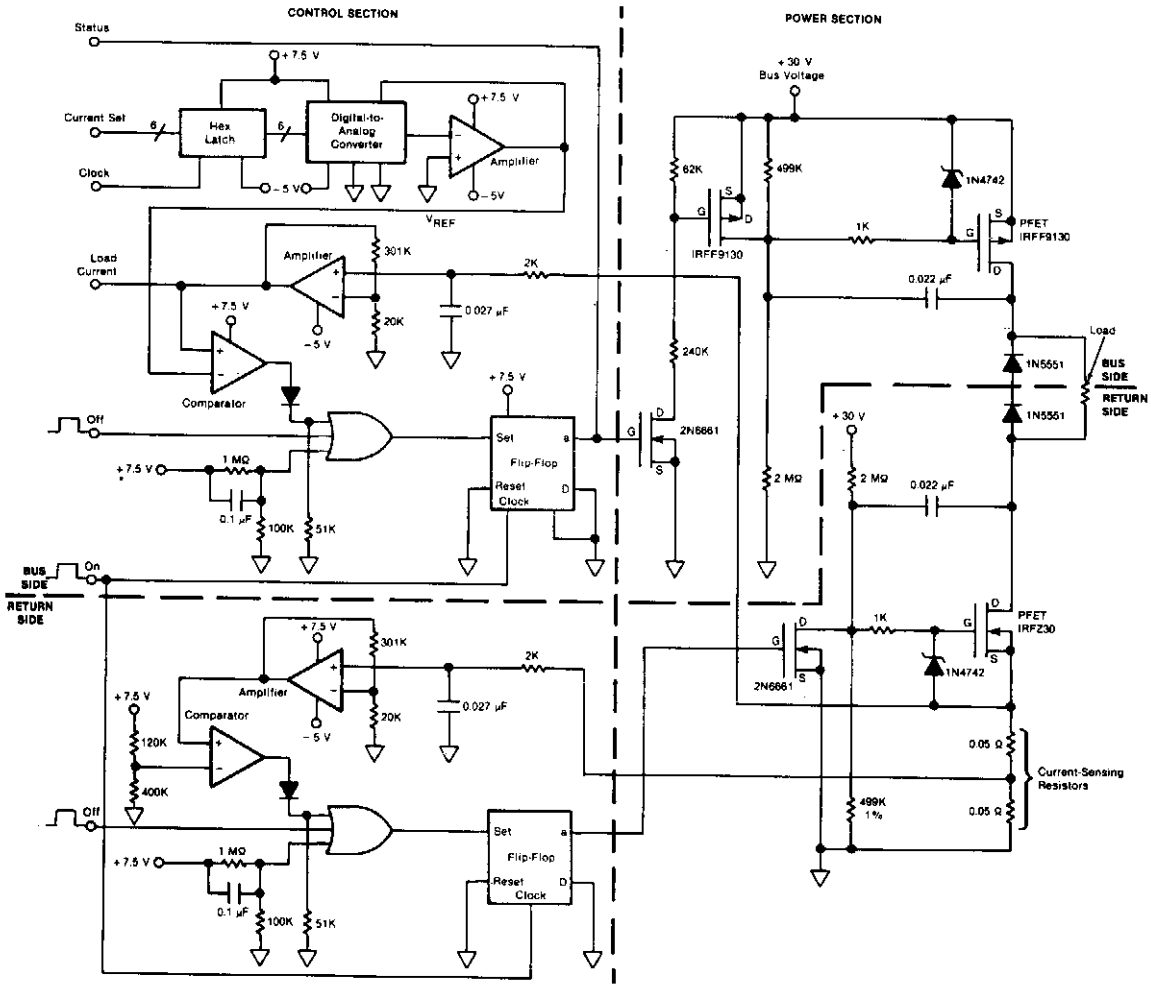

NASA

Fig. 72-4

POWER-SWITCHING CIRCUIT, Continued.

Circuit Notes

This circuit provides on/off switching, soft starting, current monitoring, current tripping, and protection against overcurrent for a 30 Vdc power supply at normal load currents up to 2 A. The switch is turned on by an "on" command pulse; it is turned off by an "off" command pulse. An overcurrent trip can also be set on the bus side by a 6-digit binary signal, which is converted to an analog voltage and compared with the amplified voltage developed across a load-current-sensing resistor. Resistor/capacitor combinations (0.027 μF, 2 kΩ) at the inputs of the current-sensing amplifiers act as low-pass filters: this introduces a few hundred μs of delay in the response to overcurrent, thereby providing some immunity to noise. The 0.022 μF capacitors connected to the drain terminals of the PFETs provide a Miller effect, which reduces the rate of change of the drain voltage and therefore the rate of rise of current at turn-on. The soft-turn-on time depends upon the load impedance and is typically 100 to 200 ms.

RADIATION-HARDENED, 125 A LINEAR REGULATOR

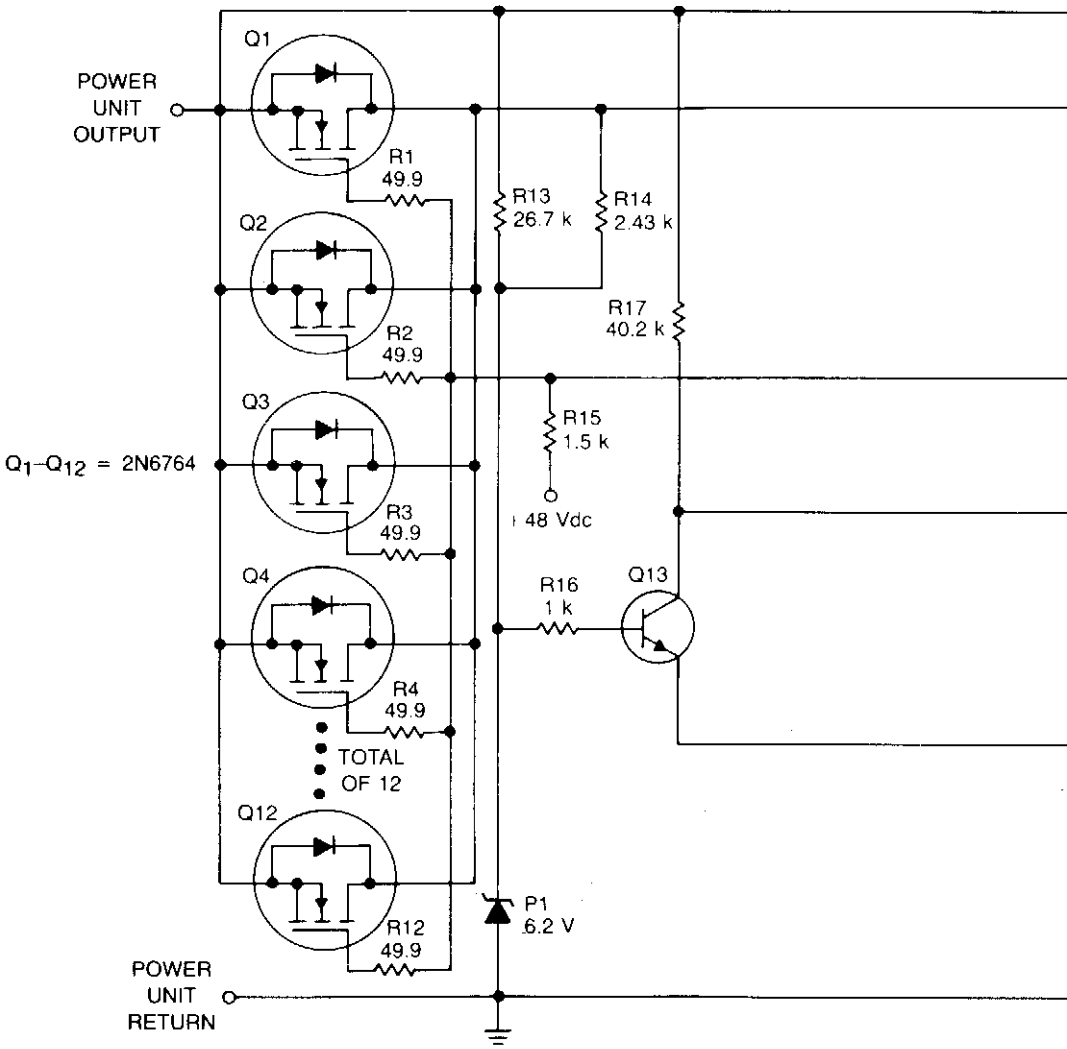

Fig. 72-5

MOTOROLA

Circuit Notes

Intended for extreme temperature, radiation-hardened environments, this linear supply is capable of supplying 28 Vdc at 125 A from an ac-driven power unit.

In operation, power supply output voltage is sensed by the voltage divider consisting of R24 to R28 and fed to one input of a discrete differential amplifier composed of Q13

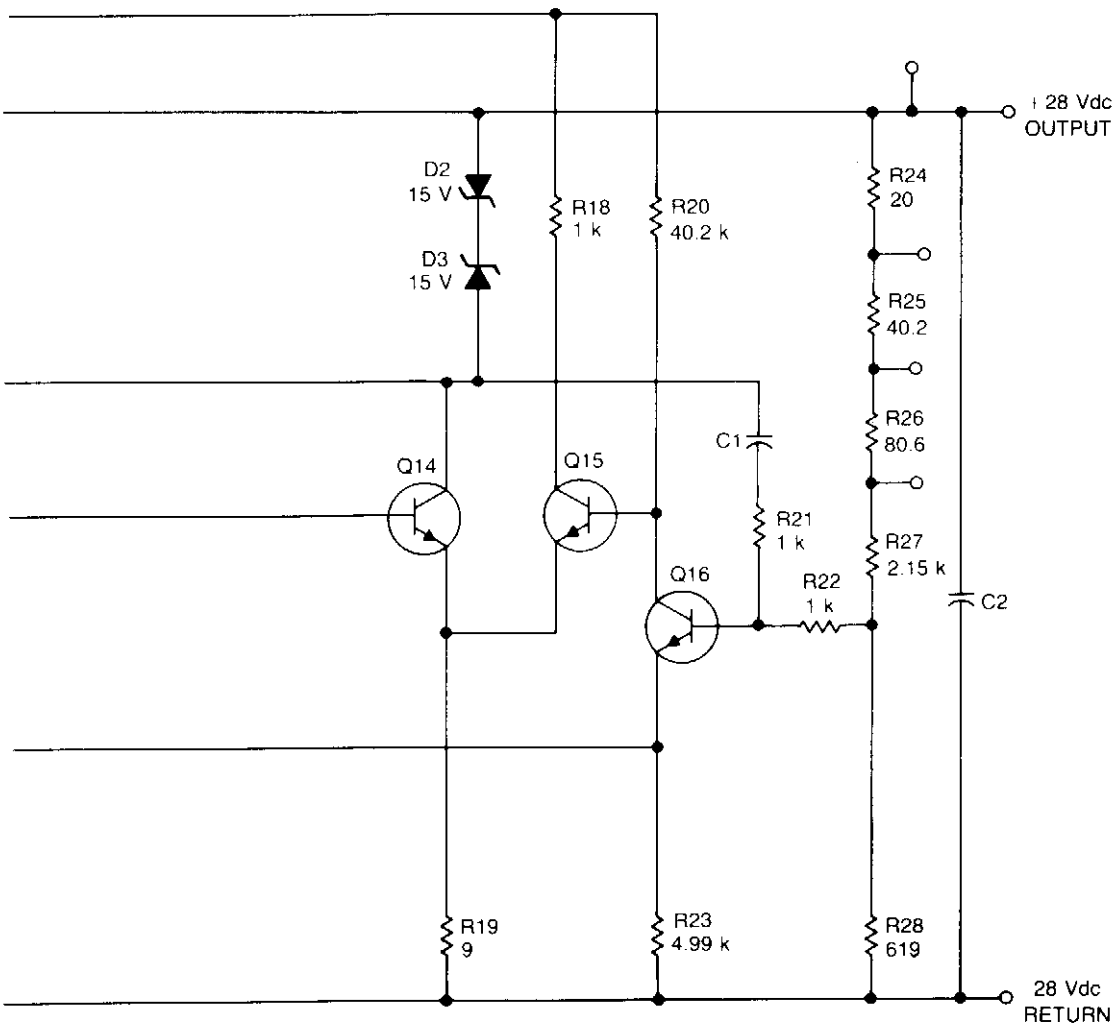

through Q16. The other input of the amplifier is connected to a radiation-hardened zener diode, D1. Local feedback using R21 and C1 produces gain to phase shift that are independent of individual component parameters, which provides stable operation into the required loads.

SWITCH MODE POWER SUPPLY

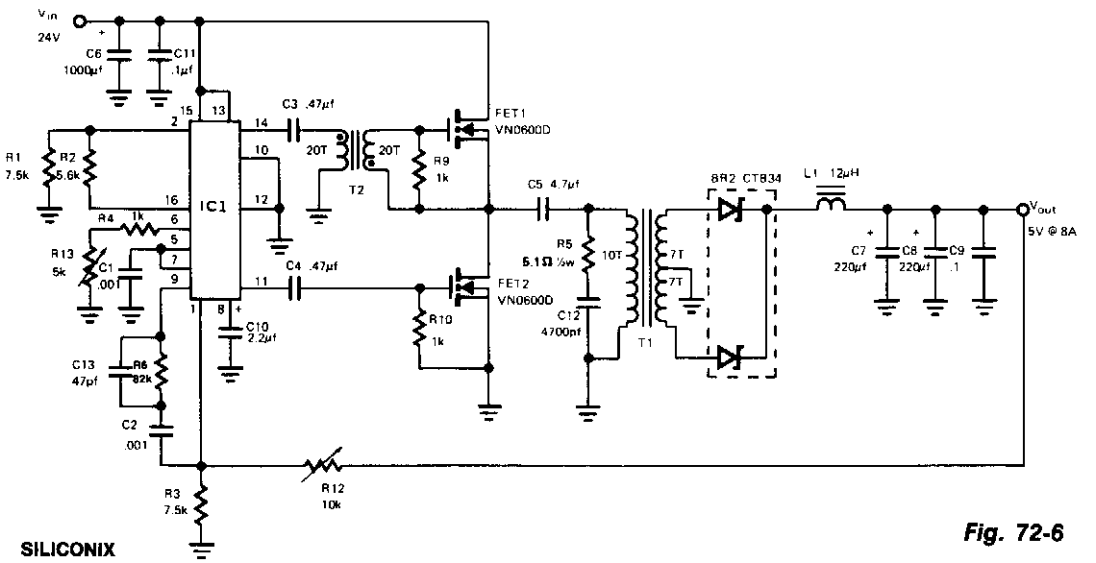

SILICONIX

Fig. 72-6

Circuit Notes

This buck-derived circuit provides up to 8 A at 5 Vdc operating off 24 to 32 Vdc. The two power MOSFETs in the circuit conduct alternately for equal periods. Switching frequency is 150 kHz, set by the PWM125 controller. Output of the two MOSFETs is transformed to a low-voltage level, then rectified. Efficiency of the circuit is 75% when operated in a 22 to 32 V range. Efficiency approaches 90% with higher voltage inputs.

MICROPOWER BANDGAP REFERENCE SUPPLY

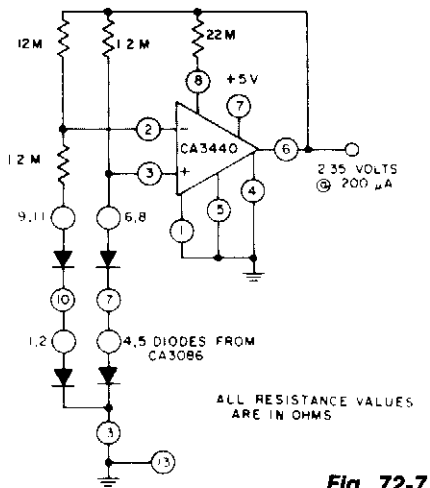

GENERAL ELECTRIC/RCA

Fig. 72-7

Circuit Notes

The circuit uses a CA3440 BiMOS op amp and CA3086 transistor array. The no-load current from 5-volt supply is 1.5 µA. Load current can go as high as 200 µA and still maintain output voltage regulation within 0.05%.

VARIABLE CURRENT SOURCE, 100 mA TO 2 AMP

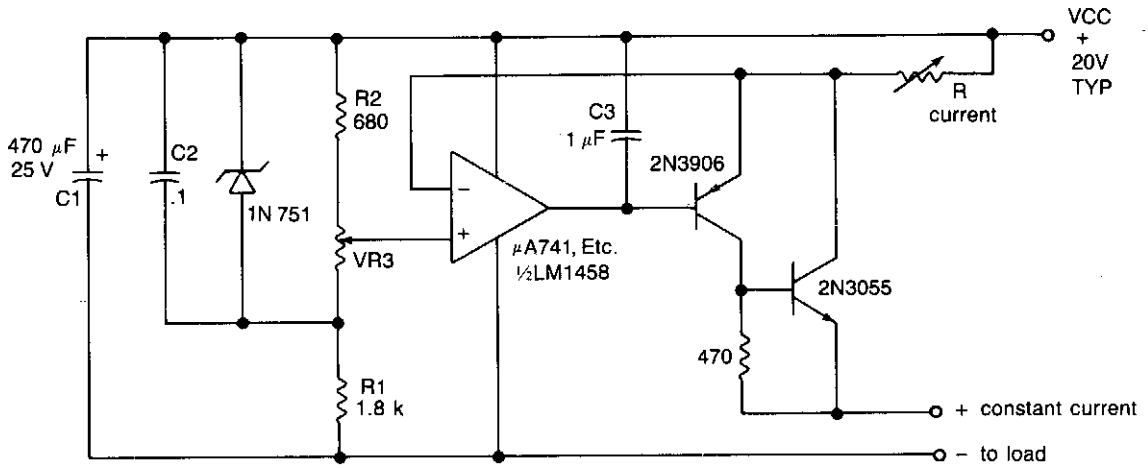

WILLIAM SHEETS

Fig. 72-8

Circuit Notes

The output current is set by the resistor R in the collector of Tr2, which may be varied to offer a range of output currents from 100 mA to 2 A with fine control by means of VR3 which varies the reference voltage to the non-inverting input of the op amp. The feedback path from the output to the inverting input of the op amp maintains a constant voltage across R, equal to (V_{CC}-V_{IN}) and hence a constant current to the load given by (V_{CC}-V_{IN})/R.

BASIC SINGLE-SUPPLY VOLTAGE REGULATOR

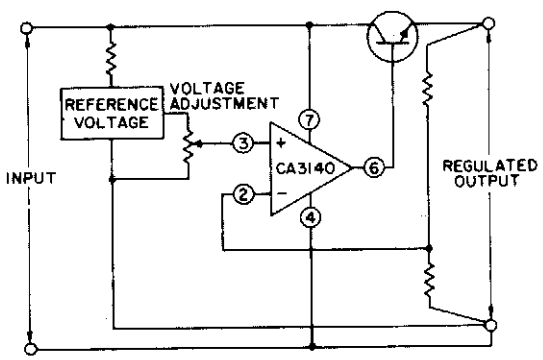

GENERAL ELECTRIC /RCA

Fig. 72-9

Circuit Notes

The circuit uses a CA3140 BiMOS op amp capable of supplying a regulated output that can be adjusted from essentially 0 to 24 volts.

BENCH TOP POWER SUPPLY

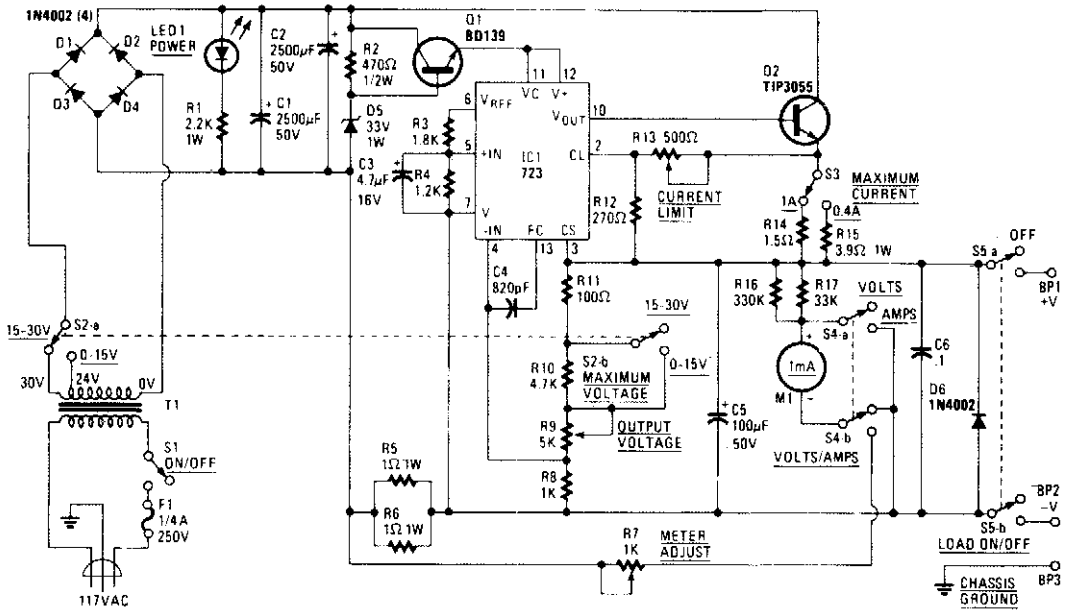

RADIO-ELECTRONICS

Fig. 72-10

Circuit Notes

A tapped transformer drives a diode bridge (D1-D4) and two 2500 µF filter capacitors (C1 and C2), that provide a no-load voltage of 37 or 47 volts, depending upon the position of switch S2a. The unregulated dc is then fed to a pre-regulator stage composed of Q1 and D5. Those components protect IC1 (the 723) from an over-voltage condition; the 723 can't handle more than 40 volts. The LED (LED1) and its 2.2 k current-limiting resistor (R1) provide on/off indication. The current through the LED varies slightly according to the transformer tap selected, but that's of no real consequence. The series-pass transistor in IC1 drives voltage-follower Q2, providing current amplification. The transistor can handle lots of power. It has a maximum collector current of 15 amps and a maximum V_{CE} of 70 V, both of which are more than adequate for our supply.

400-VOLT, 60-WATT PUSH-PULL POWER SUPPLY

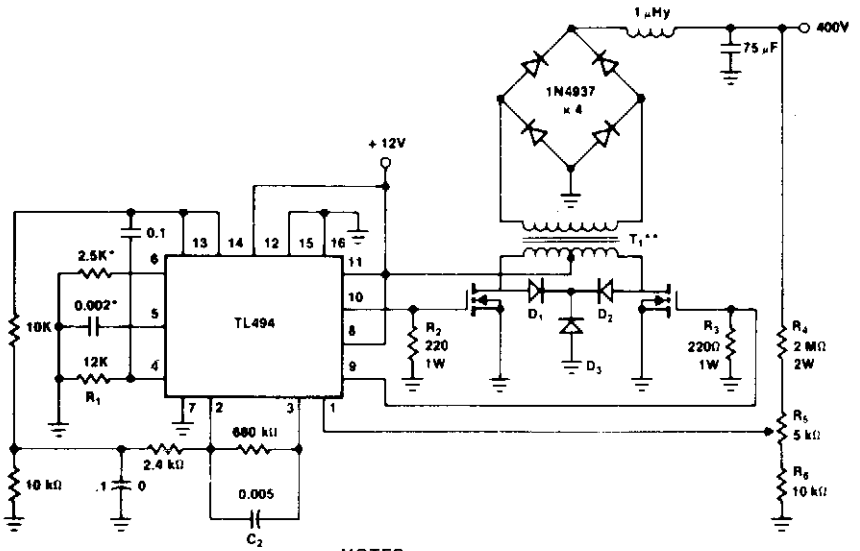

NOTES
UNLESS OTHERWISE NOTED,
ALL RESISTORS 5%, ¼ W
ALL CAPACITOR VALUES IN MICROFARADS, 25V
Q_1 & Q_2: VN64GA ON HEAT SINK
D_1 & D_2: 1N4934
D_3: 33V, 3W ZENER
T_1: PRI: 12T, CT, NO 18 AWG
SEC: 275T, NO 24 AWG
CORE: IND GEN 8231-1

SILICONIX, INC.

Fig. 72-11

Circuit Notes

The design delivers a regulated 400-V, 60-W output. The TL494 switching regulator governs the operating frequency and regulates output voltage. R1 and C1 determine switching frequency, which is approximately 0.5RC—100 kHz for the values shown. The TL494 directly drives the FET's gates with a voltage-controlled, pulse-width-modulated signal. After full-wave rectification, the output waveform is filtered by a choke-input arrangement. The 1 μH, 75 μF filter accomplishes the job nicely at 100 kHz. A feedback scheme using R4, R5 and R6 provides for output-voltage regulation adjustment, with loop compensation handled by C2. Diodes D1 and D2 provide isolation and steering for the 33-V zener transient clamp, D3. Output regulation is typically 1.25% from no-load to the full 60-W design rating. Regulation is essentially determined by the TL494. Output noise and ripple consists mainly of positive and negative 0.8-V spikes occurring when the output stage switches.

500 kHz SWITCHING INVERTER FOR 12 V SYSTEMS

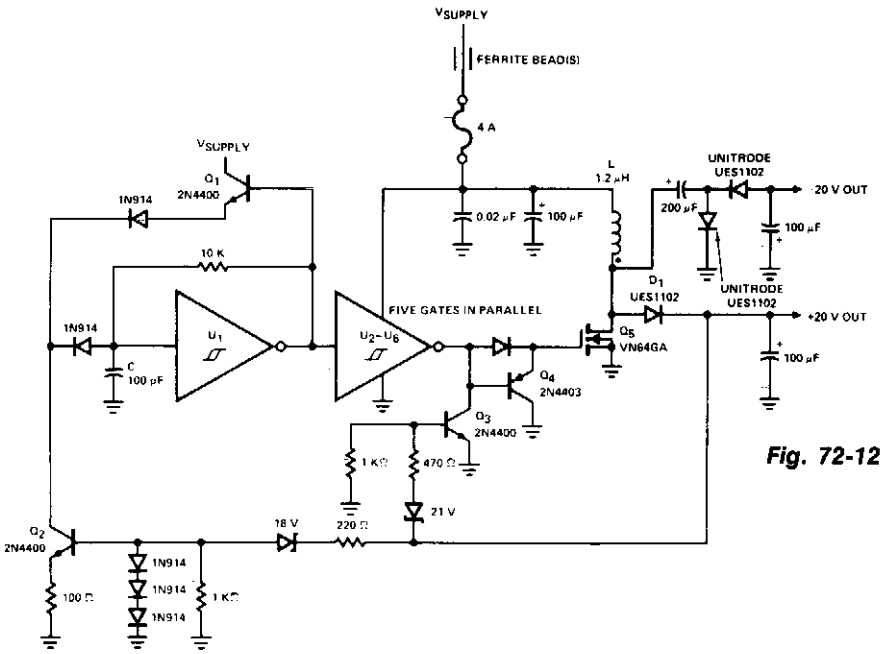

Fig. 72-12

SILICONIX, INC.

Circuit Notes

This PWM control circuit provides the control pulse to the DMOS Power Switch in the flyback circuit. The output of the PWM is a pulse whose width is proportional to the input control voltage and whose repetition rate is determined by an external clock signal. To provide the control input to the PWM and to prevent the output voltage from soaring or sagging as the load changes the error amplifier and reference voltage complete the design. They act as the feedback loop in this control circuit much like that of a servo control system.

10 AMP-REGULATOR WITH CURRENT AND THERMAL PROTECTION

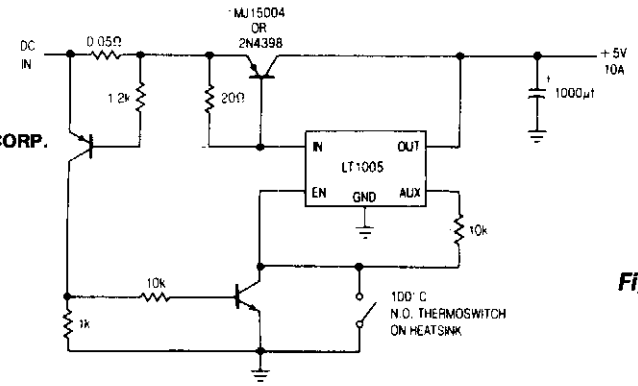

LINEAR TECHNOLOGY CORP.

Fig. 72-13

BIPOLAR POWER SUPPLY FOR BATTERY INSTRUMENTS

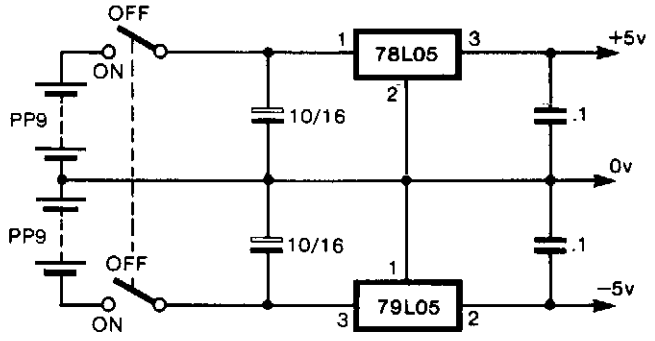

Fig. 1

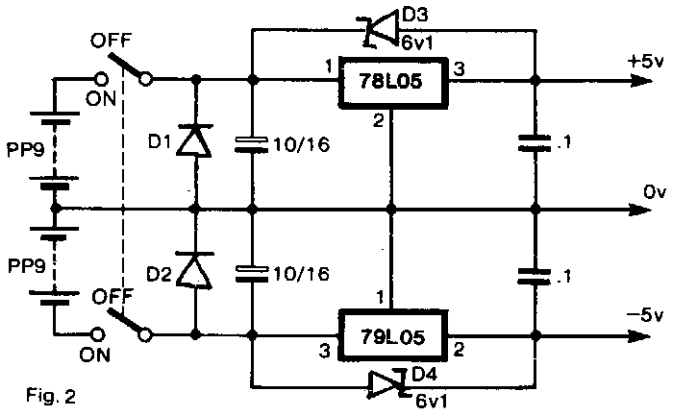

Fig. 2

Circuit Notes

To generate regulated ±5-V supplies from a pair of dry batteries, the circuit of Fig. 1 is commonly used. In order to give protection from inadvertent reverse connection of a battery, a diode in series with each battery would produce an unacceptable voltage drop. The more effective approach is to fit diodes D1 and D2 as shown in Fig. 2, in parallel with each battery.

When the supply is switched off, there is the risk of a reverse bias being applied across the regulators, if there is significant inductance or capacitance in the load circuit. Diodes across the regulators prevent damage. When the power supply is switched on, the two switches do not act in unison. There is a probability that one or the other regulators will be latched hard off by the other. To prevent this, D3 and D4 are Zener diodes so that ±5-V rails are pulled up by the batteries until the regulators establish the correct levels.

POWER SUPPLY FOR 25-WATT ARC LAMP

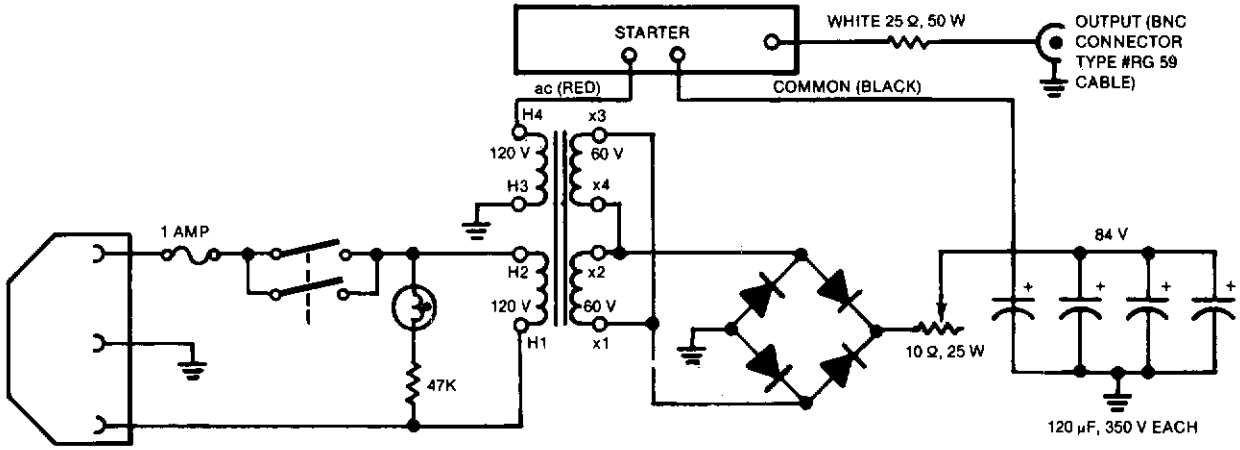

NASA

Fig. 72-15

Circuit Notes

A dual-voltage circuitry both strikes and maintains the arc. The lamps require a starting voltage in excess of 1,000 volts. Once stabilized, the voltage drop across the lamp is near 20 volts. Power supply consists of two main sections. The first section, the low-voltage power supply section, is an 84-volt direct-current supply. This supply powers the stabilized arc. Current is limited by the 10 ohm adjustable and 25 ohm fixed resistance. The second section, the high-voltage starter circuit, is a Cockroft-Walton voltage multiplier. With no load, the output voltage is 2,036 volts. However, when the arc is established, the heavy current drain maintains a forward bias on all of the diodes, and the circuit becomes a straight path with a voltage drop of 7.2 volts. The small value of the capacitors used in the multiplier guarantees that the diodes will be forward-biased once the arc is established.

STAND-BY POWER FOR NON-VOLATILE CMOS RAMs

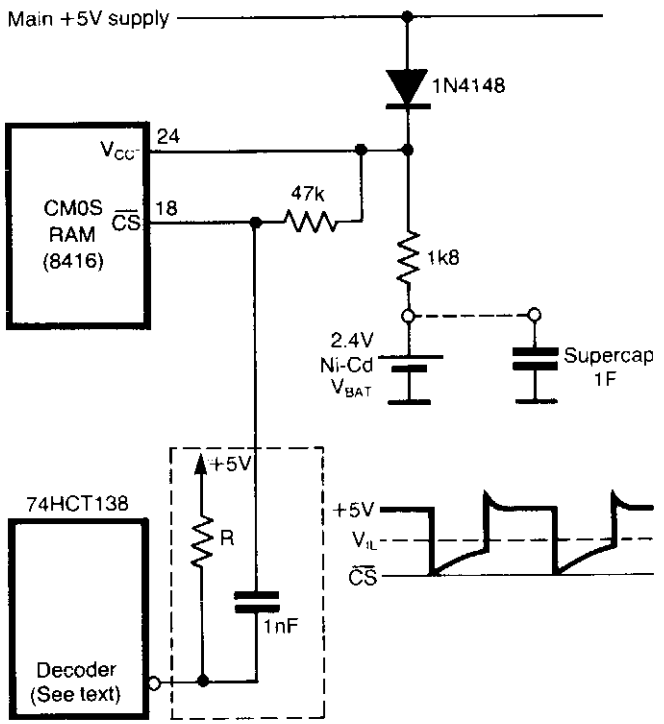

ELECTRONIC ENGINEERING

Fig. 72-16

Circuit Notes

To prevent loss of data when a CMOS RAM is switched from normal operation ($V_{CC}=5$ volts) to stand-by mode ($V_{CC}=V_{BAT}$) it must be ensured that the CS pin goes near the V_{CC} rail at all times. Ac coupling to the chip select is made through capacitor C, breaking the dc current path between V_{CC} (and hence V_{BAT}) and the decoder output. So, whatever the impedance state of the decoder in power down, the battery will provide current only for the RAM, low enough to keep the voltage at CS near to V_{CC}.

HV REGULATOR WITH FOLDBACK CURRENT LIMITING

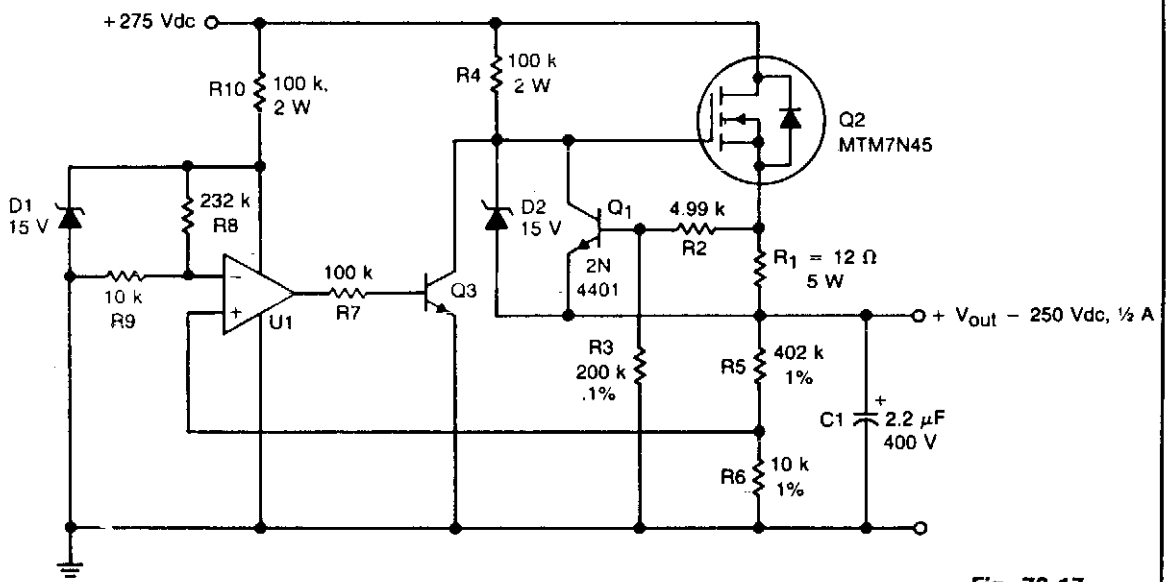

Fig. 72-17

MOTOROLA

Circuit Notes

A TMOS MTM7N45 (Q2) is used as a series pass element in a linear high voltage supply that accepts +275-V unregulated and produces 250 V regulated with foldback current limiting.

A 15-V zener, D1, provides the dc reference for operational amplifier U1, whose other input is obtained from a fraction of the output voltage. U1 drives Q3, which drives the gate of Q2. Foldback current limiting is achieved by R1, R2, R3, R4, Q1, and D2. The formula to establish the current "knee" for limiting is:

$$I_{KNEE} = \frac{V_{OUT}(R2/R2 + R3) + 0.5\ V}{R1}$$

Short circuit current is:

$$I_{SC} = \frac{0.5\ V}{R1}$$

90 V rms VOLTAGE REGULATOR USING A PUT

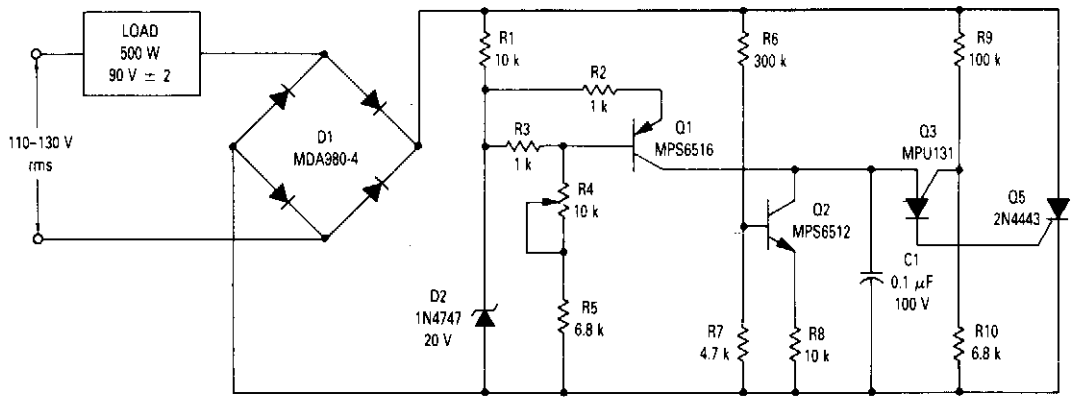

MOTOROLA

Fig. 72-18

Circuit Notes

The circuit is an open loop rms voltage regulator that will provide 500 watts of power at 90 V rms with good regulation for an input voltage range of 110-130 V rms. With the input voltage applied, capacitor C1 charges until the firing point of Q3 is reached causing it to fire. This turns Q5 on which allows current to flow through the load. As the input voltage increases, the voltage across R10 increases which increases the firing point of Q3. This delays the firing of Q3 because C1 now has to charge to a higher voltage before the peak-point voltage is reached. Thus the output voltage is held fairly constant by delaying the firing of Q5 as the input voltage increases. For a decrease in the input voltage, the reverse occurs.

12-14 V REGULATED 3 A POWER SUPPLY

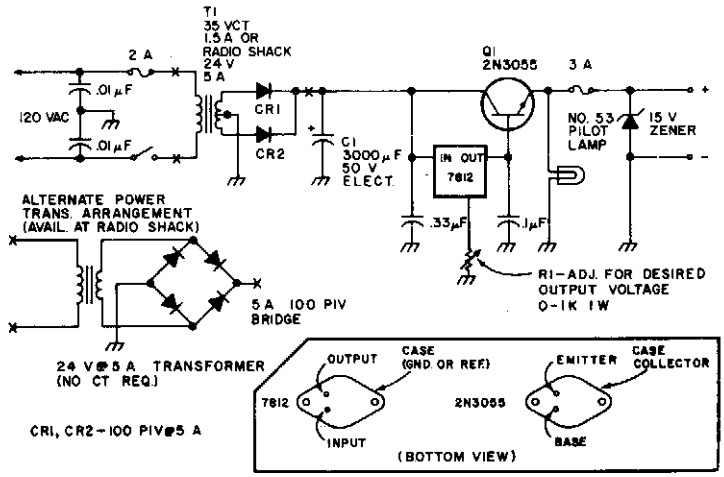

AMATEUR RADIO

Fig. 72-19

DC-TO-DC SMPS VARIABLE 18 V TO 30 V OUT AT 0.2 A

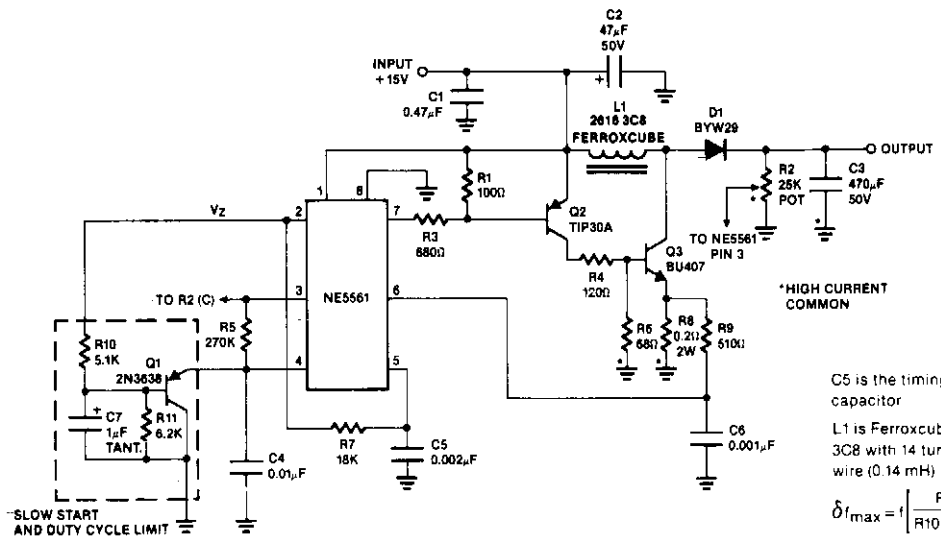

C5 is the timing capacitor

L1 is Ferroxcube 2616 3C8 with 14 turns of #18 enameled wire (0.14 mH)

$$\delta f_{max} = f\left[\frac{R11}{R10 + R11}(V_Z) + V_{BE}\right]$$

SIGNETICS

Fig. 72-20

OFF-LINE FLYBACK REGULATOR

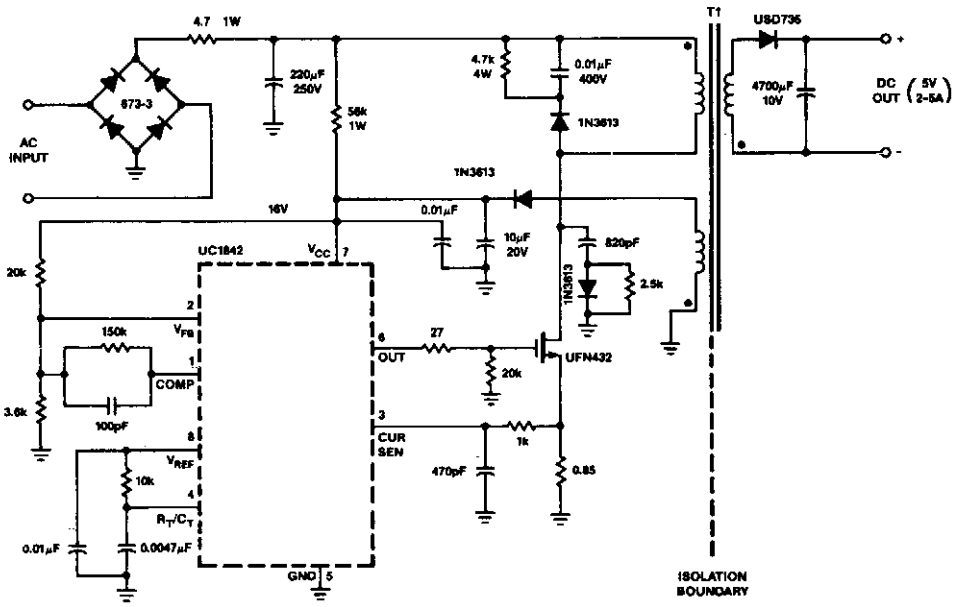

NOTES:
T1: Coilcraft E-4140-B
Primary - 97 turns
single AWG 24
Secondary - 4 turns
4 parallel AWG 22
Control - 9 turns
3 parallel AWG 28

SPECIFICATIONS

Input line voltage:	$90V_{AC}$ to $130V_{AC}$	Efficiency @ 25 W,	
Input frequency:	50 or 60Hz	V_{IN} = $90V_{AC}$:	70%
Switching frequency:	40kHz± 10%	V_{IN} = $130V_{AC}$:	65%
Output power:	25W maximum	Output short-circuit current:	2.5A average
Output voltage:	5V± 5%		
Output current:	2 to 5A		
Line regulation:	0.01%/V		
Load regulation:	8%/A		

SIGNETICS

Fig. 72-21

Circuit Notes

This circuit uses a low-cost feedback scheme in which the dc voltage developed from the primary-side control winding is sensed by the UC1842 error amplifier. Load regulation is therefore dependent on the coupling between secondary and control windings, and on transformer leakage inductance. For applications requiring better load regulation, a UC1901 Isolated Feedback Generator can be used to directly sense the output voltage.

SCR PREREGULATOR FITS ANY POWER SUPPLY

Fig. 1

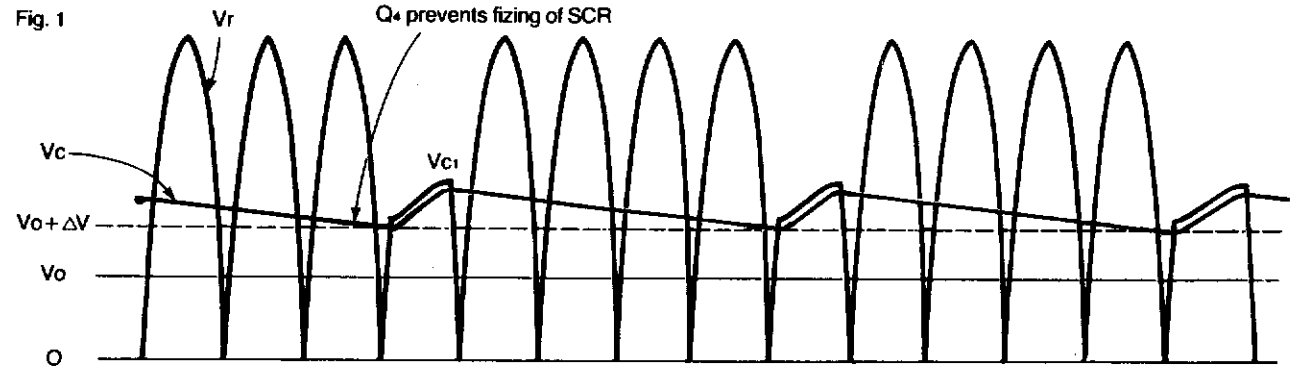

Fig. 2

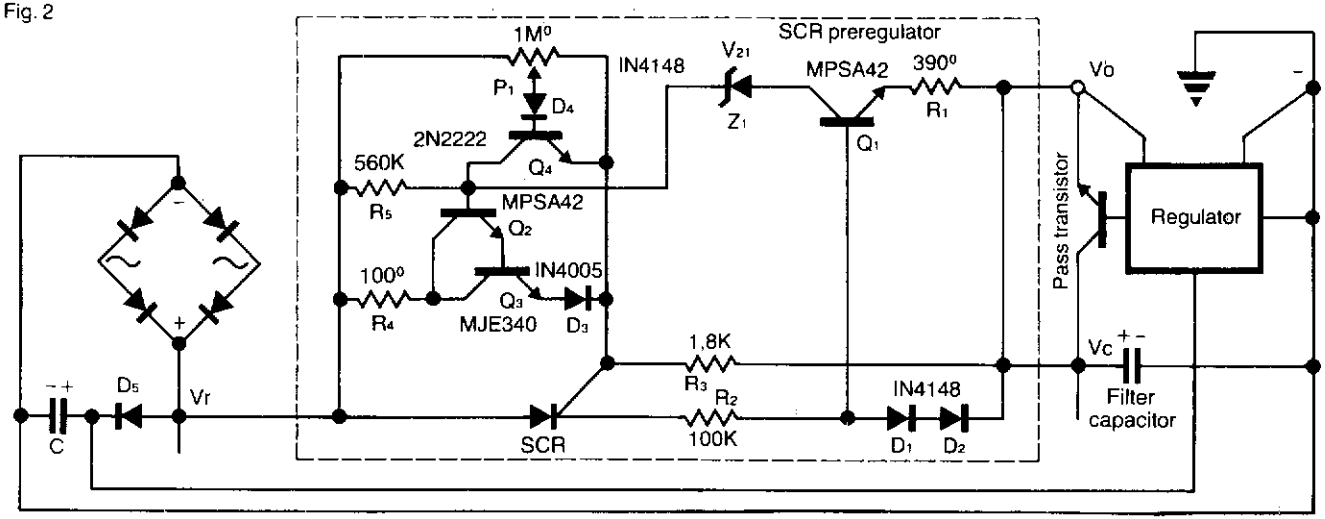

ELECTRONIC ENGINEERING

Fig. 72-22

Circuit Notes

This SCR pre-regulator keeps the filter capacitor V_c, in a variable output power supply, a few volts above the output voltage V_o. The benefits include: less heat dissipated by the pass transistor and therefore small heatsink, cooler operation and higher efficiency, especially at low output voltages.

Q1, R1, R2, D1 and D2 form a constant current source for zener Z1, so that the contribution to the output current is always a few mA (2 - 3 mA).

The Darlington pair Q2, Q3 keeps the SCR off. The voltage V_c decreases until $V_c = V_o = V$ at which point the Darlington pair fires the SCR, charging the filter capacitor to a higher voltage V_c^1 in less than half the period of the input voltage. The component values, shown are for a 0 - 250-V, 3-A power supply.

VOLTAGE REGULATOR

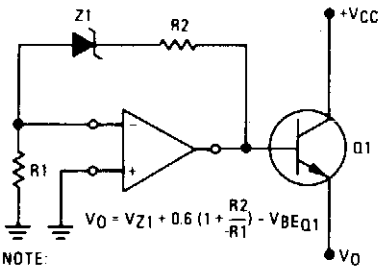

Fig. 72-23

MOTOROLA, INC.

ZENER DIODE INCREASE FIXED PNP REGULATOR'S OUTPUT VOLTAGE RATINGS

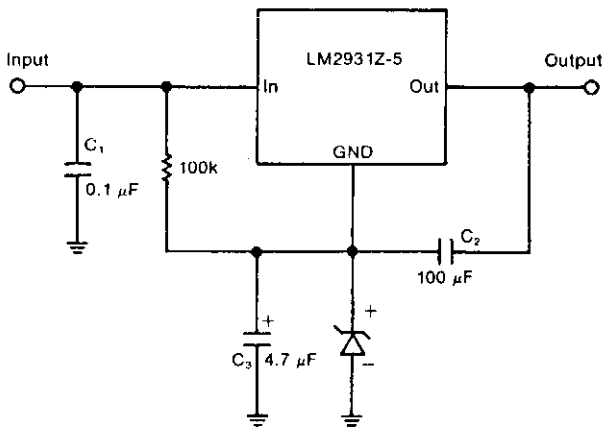

ELECTRONIC DESIGN

Fig. 72-24

Circuit Notes

A zener diode in the ground lead of a fixed pnp regulator varies the voltage output of that device without a significant sacrifice in regulation. The technique also allows the regulator to operate with output voltages beyond its rated limit.

INCREASING THE POWER RATING OF ZENER DIODES

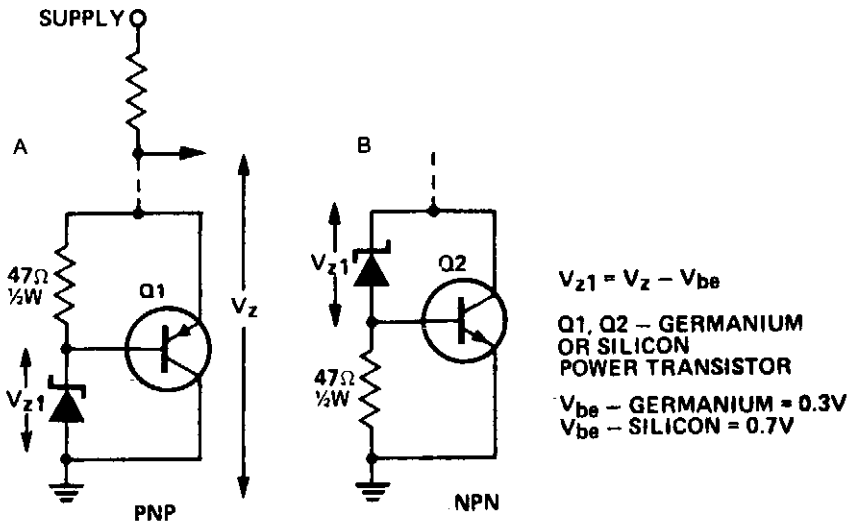

ELECTRONICS TODAY INTERNATIONAL

Fig. 72-25

Circuit Notes

A power transistor can be used to provide a high powered zener voltage from a low wattage zener. A 400 mW zener can be used where a 10 watt zener is required or a 1 W zener can be used where a 50 to 80 watt zener is required by using appropriate transistors for Q1 and Q2 in the circuits shown. Where low rating is required, Q1 would be an ASZ 15 (germanium) or an AY9140 (silicon). Q2 could be a 2N2955 (silicon). For higher powers, Q1 should be an ASZ18 (germanium) or a 2N2955 (silicon) and Q2 a 2N3055 (silicon) or an AY8149 (silicon). A heatsink on the transistor is required. The circuit in *A* has the advantage that power transistors can be bolted directly on to a chassis which may serve as a heatsink.

MEMORY SAVE ON POWER-DOWN

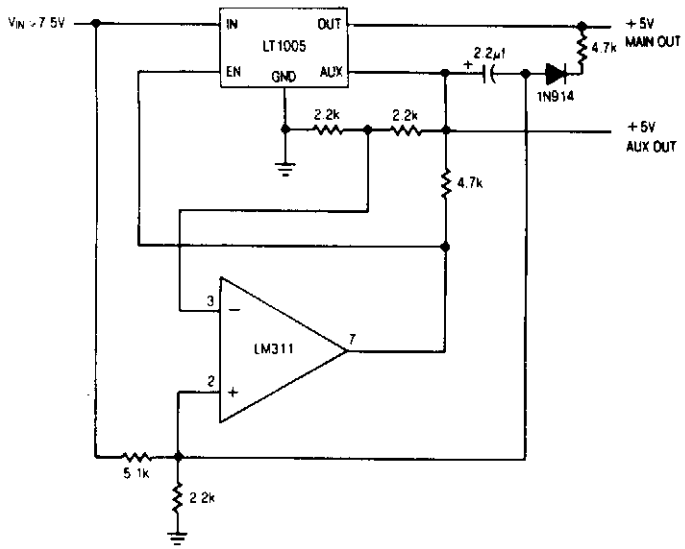

LINEAR TECHNOLOGY

Fig. 72-26

Circuit Notes

The auxiliary output powers the memory, while the main output powers the system and is connected to the memory store pin. When power goes down, the main output goes low, commanding the memory to store. The auxiliary output then drops out.

73
Power Supply Circuits (High Voltage)

The sources of the following circuits are contained in the Sources section beginning on page 694. The figure number contained in the box of each circuit correlates to the source entry in the Sources section.

Low Cost Ultra High Generator
Simple High-Voltage Supply
High Voltage Geiger Counter Supply
High Voltage Supply

LOW COST ULTRA HIGH VOLTAGE GENERATOR

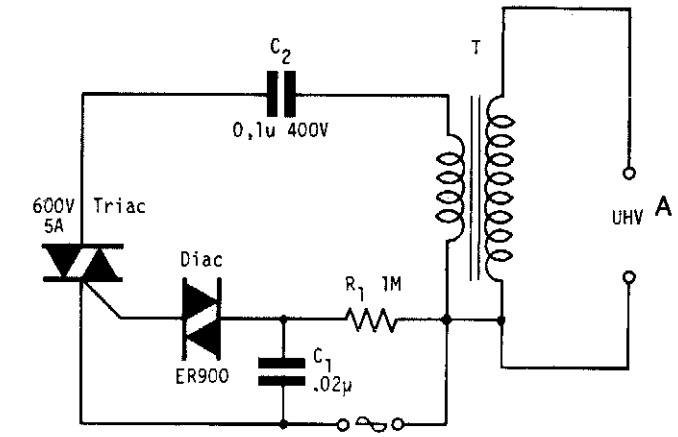

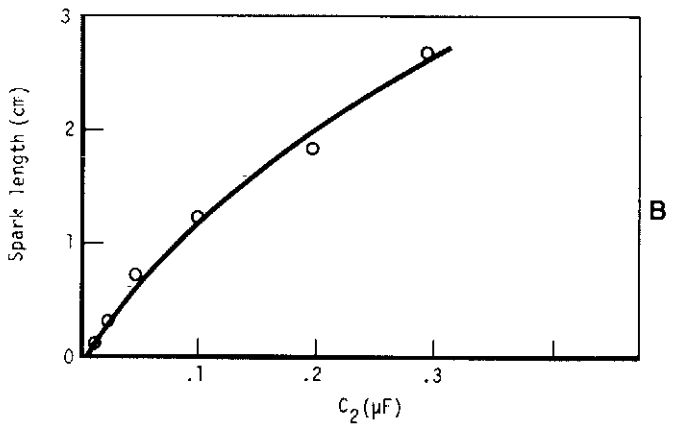

ELECTRONIC ENGINEERING

Fig. 73-1

Circuit Notes

By repetitively charging and discharging a capacitor through the primary of an induction coil with a high voltage, an ultra high emf is induced in the secondary. Switching is performed by the triac, triggered by the disc at times set by C1 and R1. With a 12 V car ignition coil for example, the length of sparkgap obtained is 12 mm of air for C2 = 0.1 μF. If the dielectric strength of air is assumed to be 3 kV/mm, this spark-gap length corresponds to 36 kV. From the curve shown in Fig. B, care must be taken in keeping the value of C2 below 1 μF as the coil is liable to be seriously damaged at this value of C2. Power consumption is only about one watt.

SIMPLE HIGH-VOLTAGE SUPPLY

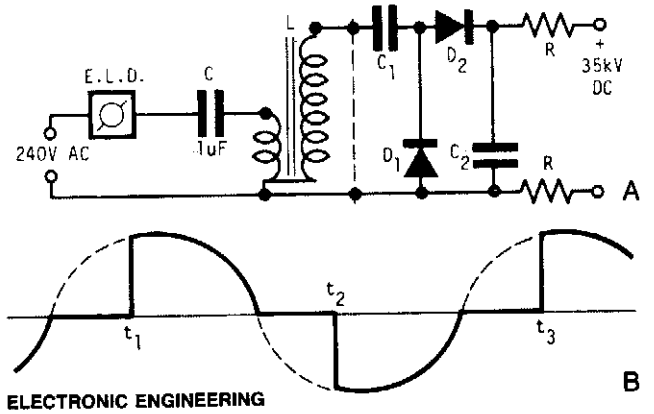

ELECTRONIC ENGINEERING

Fig. 73-2

Circuit Notes

A light dimmer, a 1 μF capacitor and a 12 V car ignition coil form the simple line powered HV generator. The current in the dimmer is shown in Fig. B. At times t_1, t_2, . . . , set by the dimmer switch, the inner triac of the dimmer switches on, and a very high and very fast current pulse charges the capacitor through the primary of the induction coil. Then at a rate of 120 times per second for a 60 Hz line, a very high voltage pulse appears at the secondary of the coil. To obtain an HV dc output, use a voltage doubler. D1 and D2 are selenium rectifiers (TV 18 Siemens or ITT) used for the supply of television sets. High value output shock protection resistors, R, are recommended when suitable.

HIGH VOLTAGE GEIGER COUNTER SUPPLY

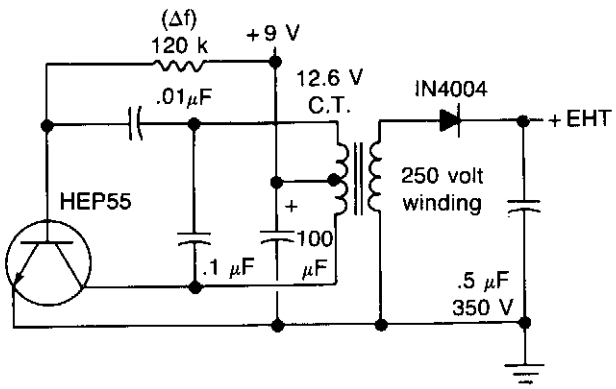

POPULAR ELECTRONICS

Fig. 73-3

Circuit Notes

This circuit will generate about 300 volts dc—at a very low current, but enough for a GM tube.

HIGH VOLTAGE SUPPLY

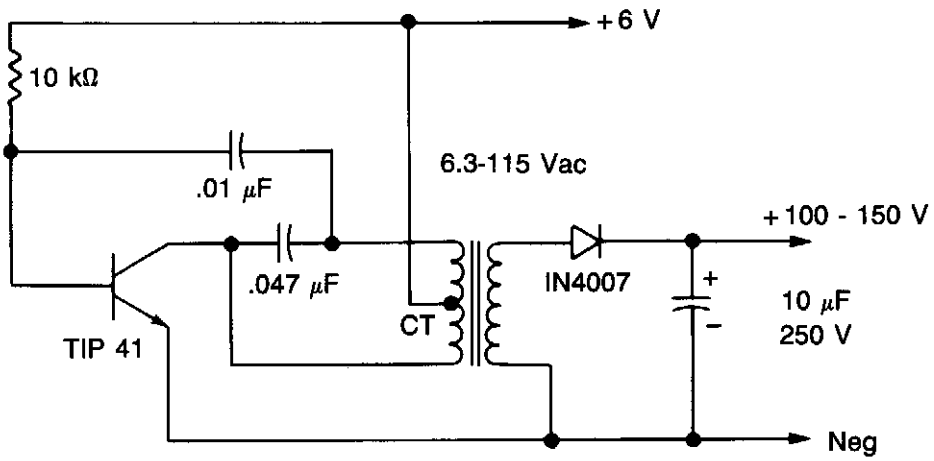

WILLIAM SHEETS

Fig. 73-4

Circuit Notes

A 6 V battery can provide 100-150 Vdc center-tapped at a high internal impedance (not dangerous though it can inflict an unpleasant jolt). A 6.3 V transformer is connected "in reverse" with a transistor used in a Hartley oscillator configuration. The frequency of operation may be controlled by varying the value of the 10 K ohm resistor. The 10 μF capacitor must have a working voltage of at least 250 Vdc.

74

Power Supply Monitors

The sources of the following circuits are contained in the Sources section beginning on page 694. The figure number contained in the box of each circuit correlates to the source entry in the Sources section.

Power Supply Monitor
Low-Volts Alarm
Microprocessor Power Supply Watchdog
Overvoltage Protection Circuit (SCR Crowbar)
Power Supply Protection Circuit

POWER SUPPLY MONITOR

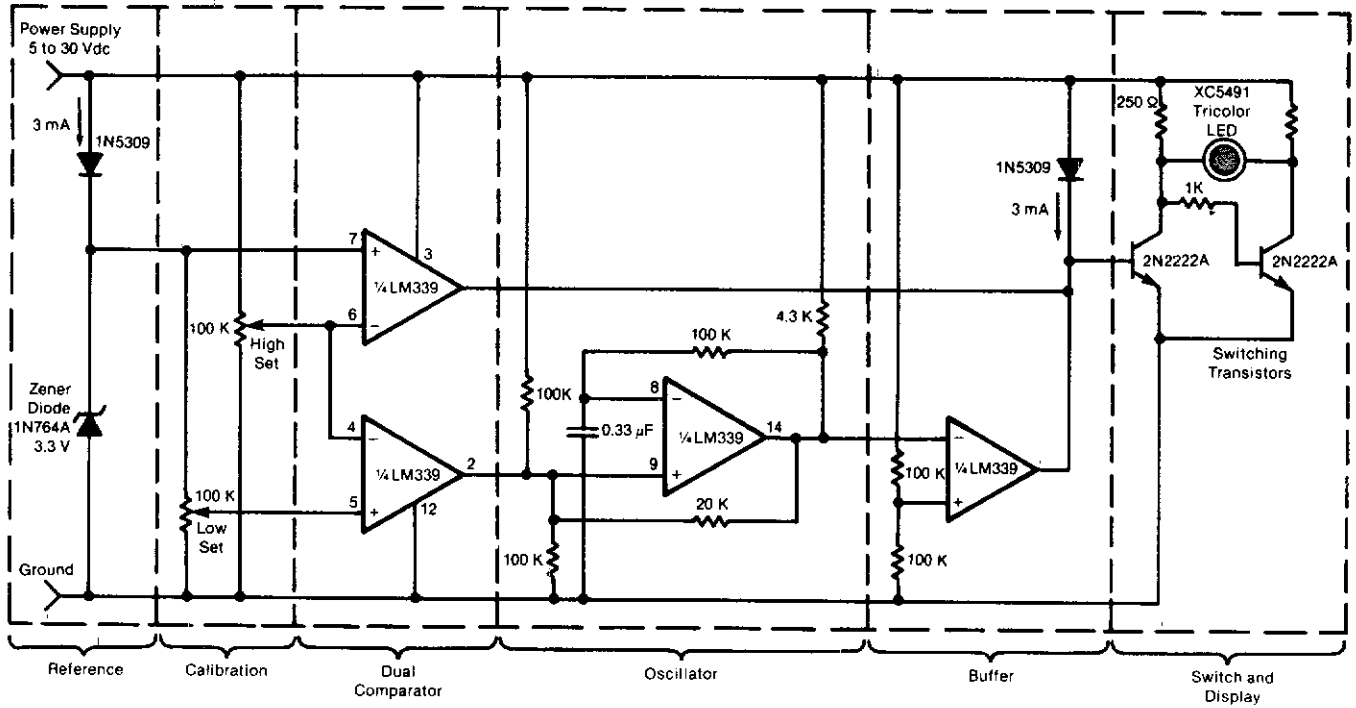

NASA

Fig. 74-1

Circuit Notes

This circuit uses a tricolor LED display to indicate acceptable and unacceptable output voltages. One to set the upper voltage limit, the other, the lower voltage limit. When the monitored voltage is above the set maximum, the LED display turns red. Yellow turns on for voltages below the set minimum, and green turns on for voltages between the high and the low settings. The circuit does not need a separate power supply. It is powered by the voltage it monitors. The circuit can be adapted to monitor voltage differences between two power supplies. Should the monitored voltages differ by more than a set value, a visual or an audible alarm would warn the operator about the difference. The circuit can also be modified for remote monitoring and the use of a separate power supply.

LOW-VOLTS ALARM

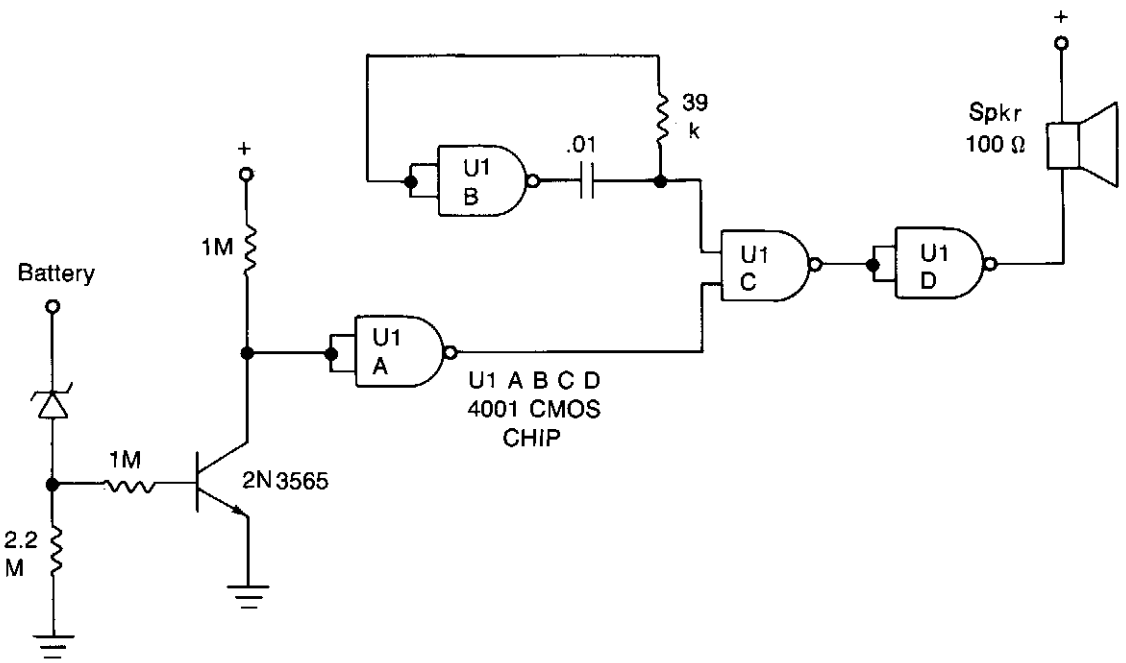

WILLIAM SHEETS

Fig. 74-2

Circuit Notes

This inexpensive dc supply-voltage monitor sounds a warning when the voltage falls below a preset value. It is ideal for monitoring rechargeable batteries since it draws only a few microamperes when not sounding. The voltage at which the alarm sounds is determined by the zener diode. When the voltage falls below the zener voltage, the alarm sounds. The alarm tone is determined by the RC time constant of the 39 k resistor and 0.01 mf capacitor.

MICROPROCESSOR POWER SUPPLY WATCHDOG

Fig 1

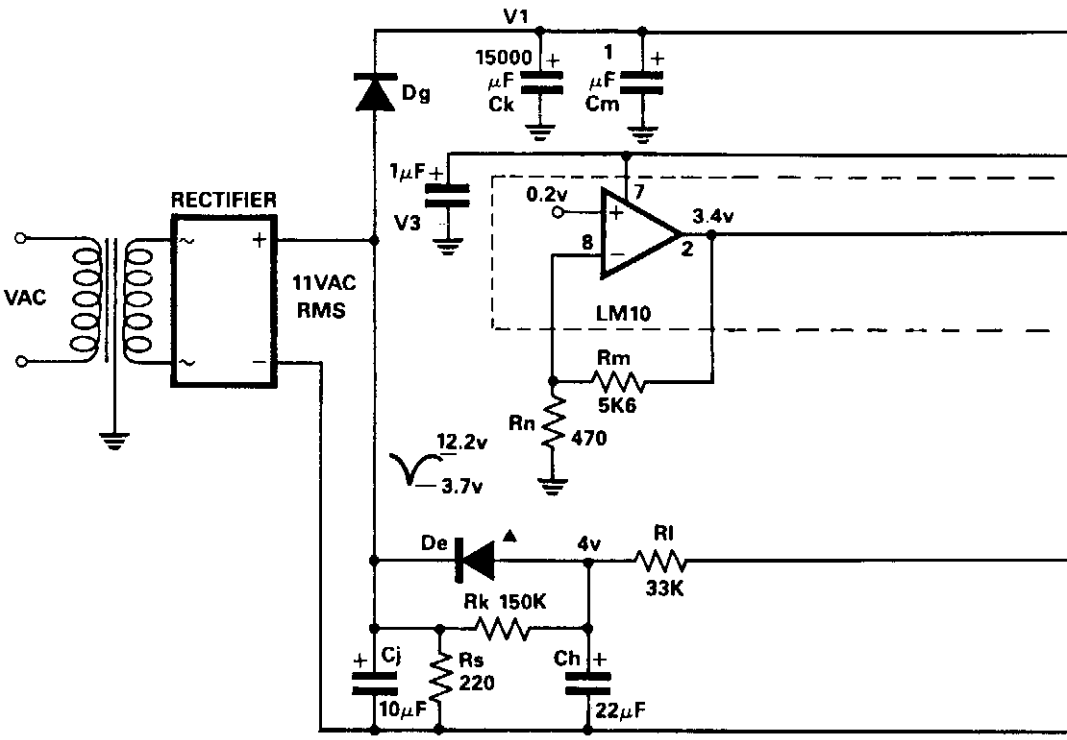

ELECTRONIC ENGINEERING

Fig. 74-3

Circuit Notes

The circuit monitors the input to the microprocessor 5 V regulated supply for voltage drops and initiates a reset sequence before supply regulation is lost. In operation, the resistor capacitor combination Rs and Cj form a short time constant smoothing network for the output of the fullwave bridge rectifier. An approximately triangular, voltage waveform appears across C and Rs and it is the minimum excursion of this that initiates

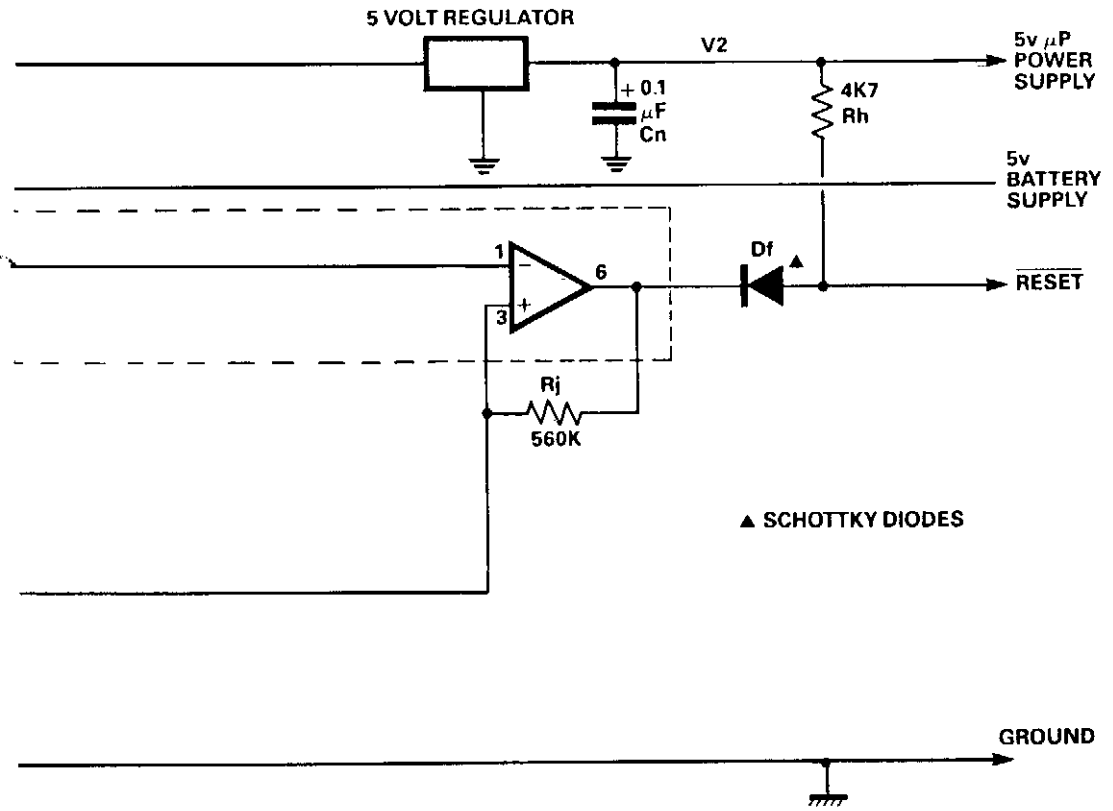

the reset. Diode Dg prevents charge sharing between capacitors Cj and Ck. Resistors Rn and Rm form a feedback network around the voltage reference section of the LM10C, setting a threshold voltage of 3.4 volts. The threshold voltage is set at 90% of the minimum voltage of the triangular waveform. When the triangular wave trough, at the comparator's non-inverting input, dips below the threshold, the comparator output is driven low. This presents a reset to the microprocessor. Capacitor Ch is charged slowly through resistor Rk and discharged rapidly through diode De.

OVERVOLTAGE PROTECTION CIRCUIT (SCR CROWBAR)

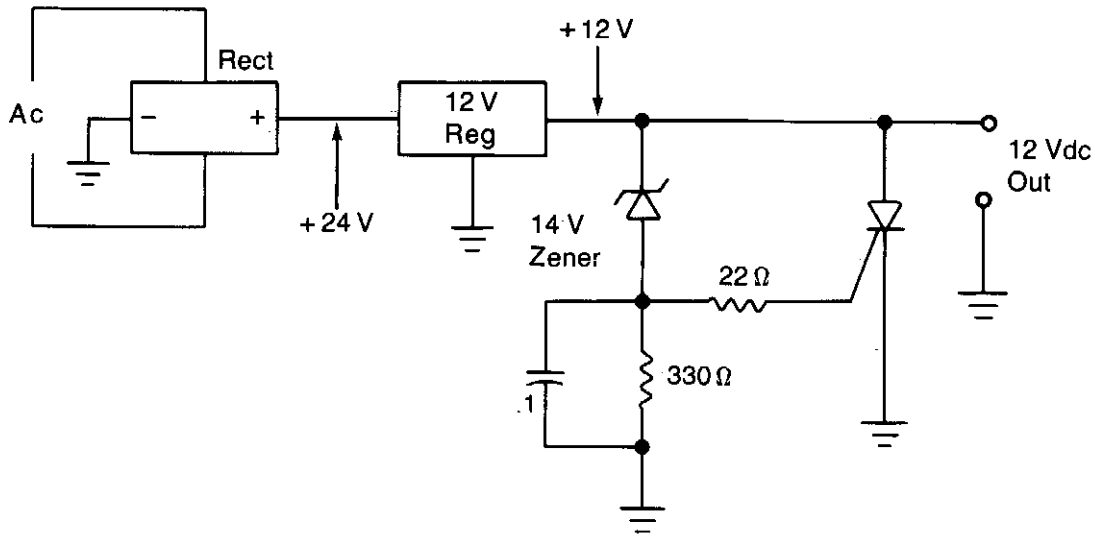

WILLIAM SHEETS

Fig. 74-4

Circuit Notes

The silicon controlled rectifier (SCR) is rated to handle at least the current of the power supply. It is connected in parallel across the 12 V dc output lines, but remains inert until a voltage appears at the gate terminal. This triggering voltage is supplied by the zener diode. At potentials less than 14 V the zener will not conduct current. But, at potentials greater than 14 Vdc the zener conducts and creates a voltage drop across the 330 ohm resistor that will fire the SCR. When the SCR turns on, the output lines of the power supply are shorted to ground. This will blow the primary fuse or burn out the transformer if there is no primary fuse.

POWER SUPPLY PROTECTION CIRCUIT

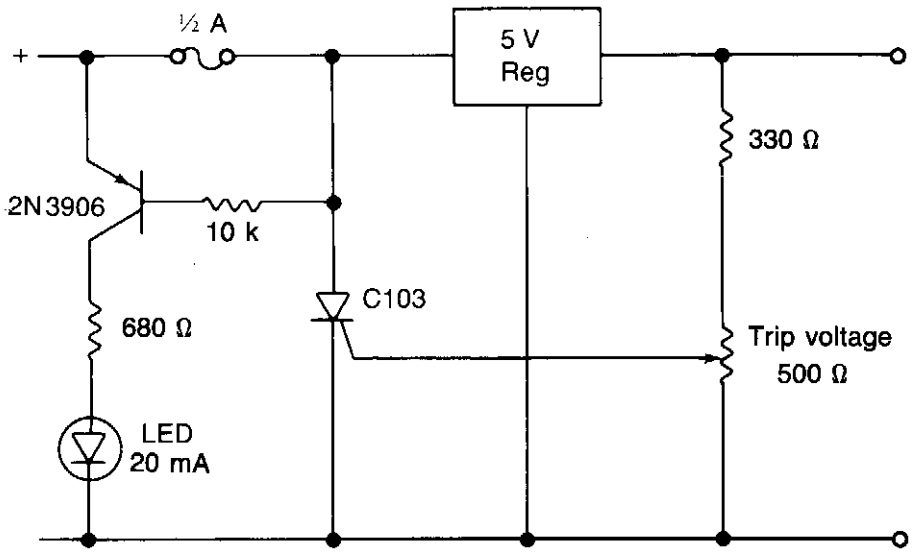

WILLIAM SHEETS

Fig. 74-5

Circuit Notes

When using a regulated supply to reduce a supply voltage there is always the danger of component failure in the supply and consequent damage to the equipment. A fuse will protect when excess current is drawn, but might be too slow to cope with overvoltage conditions. The values shown are for a 12 V supply being dropped to 5 V. The trip voltage is set to 5.7 V to protect the equipment in the event of a regulator fault. The 330 ohm resistor and the 500 ohm potentiometer form a potential divider which samples the output voltage as set by adjustment of the potentiometer. The SCR is selected to carry at least twice the fuse rating. The full supply voltage is connected to the input of the regulator. The 2N2906 is held bias off by the 10 k resistor and the SCR so that the LED is held off. If the output voltage rises above a set trip value then the SCR will conduct, the fuse will blow, and the 2N3906 will be supplied with base current via the 10 k resistor, and the LED will light up.

75

Probes

The sources of the following circuits are contained in the Sources section beginning on page 694. The figure number contained in the box of each circuit correlates to the source entry in the Sources section.

Microvolt Probe
Single Injector-Tracer
General Purpose RF Detector
Clamp-on-Current Probe Compensator
650 MHz Amplifying Prescaler Probe
Tone Probe for Testing Digital ICs

MICROVOLT PROBE

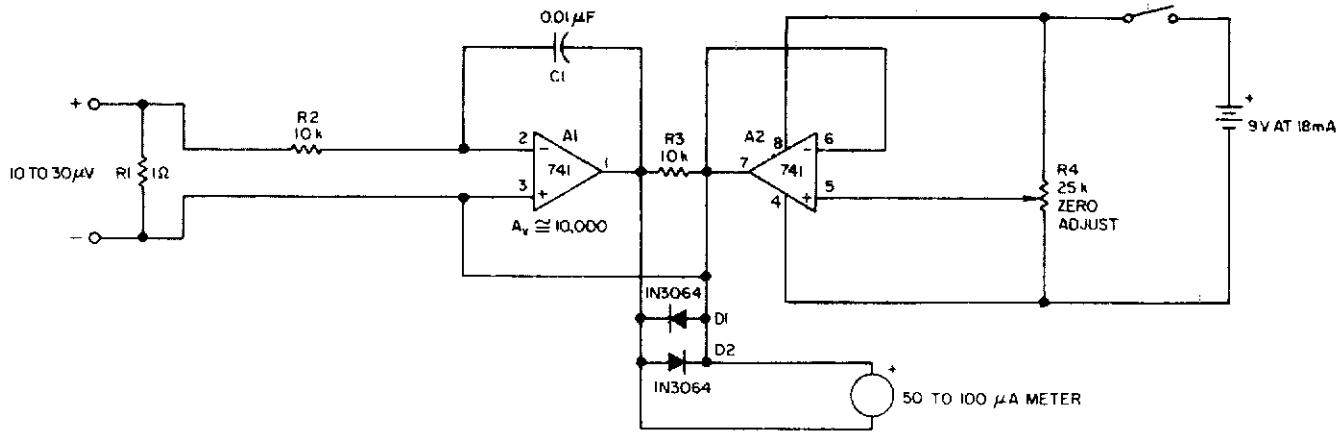

ELECTRONIC DESIGN

Fig. 75-1

Circuit Notes

The current tracer helps locate a defective IC that is loading down the power supply. The tracer amplifies the small voltage drop caused by current flow along a fraction of an inch of PC wiring and drives an ordinary microammeter. Needle-point test probes are used to contact the edge of a PC trace and to follow the current to determine which branch the current takes. One-half of a dual 741 op amp forms a dc amplifier with ac feedback to prevent oscillations and hum-pickup problems. It drives a 50-to-100 μA meter. The other op amp provides a center tap for the 9 V battery supply and zero adjustment with R4. Two diodes protect the meter. Resistor R1 eliminates the necessity for shorting the probes when the meter is zeroed. The value of 1 ohm is large when compared with the resistance of the meter leads plus the bridged portion of PC wiring.

SINGLE INJECTOR-TRACER

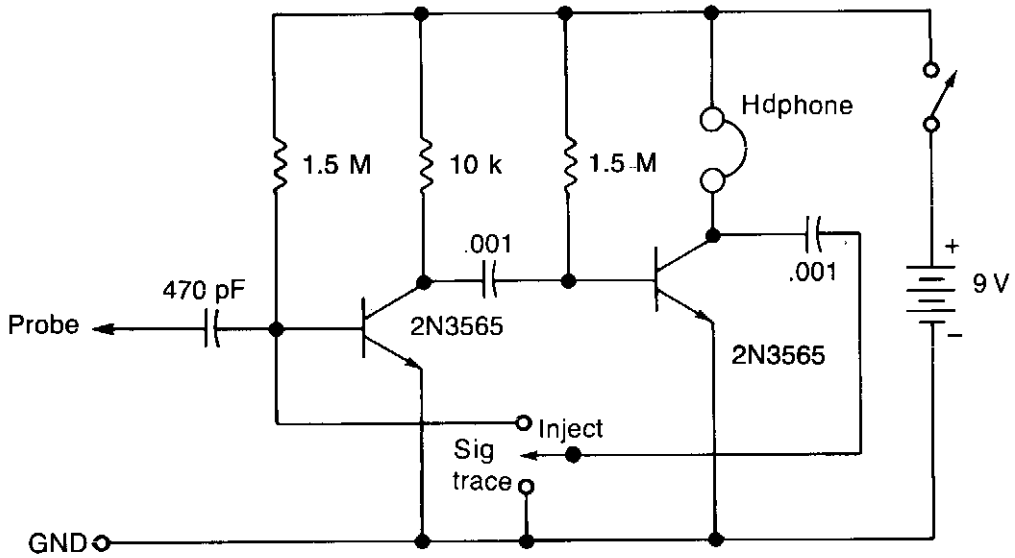

WILLIAM SHEETS

Fig. 75-2

Circuit Notes

This circuit will provide a nominal square wave output in the audio range in the "Inject" mode, the harmonics of which should be heard at several MHz. In the "Trace" mode the non-linear operation of the amplifier will detect modulated rf signals which will be filtered by the .001 μF capacitor and heard in the headphones.

GENERAL PURPOSE RF DETECTOR

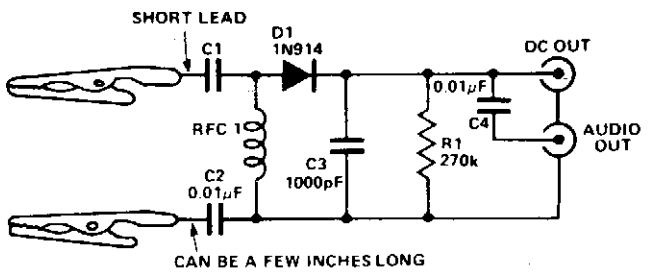

ELECTRONICS TODAY INTERNATIONAL

Fig. 75-3

Circuit Notes

This circuit provides a dc output to a meter and an audio output (if necessary) for checking transmitters or modulated signals. It can be used also as a field strength meter or transmitter monitor.

CLAMP-ON-CURRENT PROBE COMPENSATOR

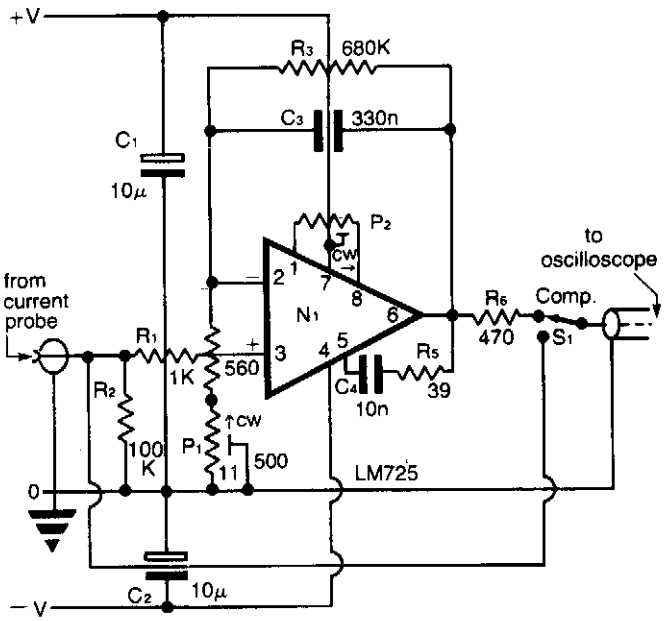

Table

Tek P6021, on its own	with Tek amp. 134	with compensator
120Hz to 60MHz @ 10mA/mV 450Hz to 60MHz @ 2mA/mV	12Hz to 38MHz (switched 1mA to 1A/div for 50mV/div output	1Hz to 100kHz @ 2mA/mV

ELECTRONIC ENGINEERING

Fig. 75-4

Circuit Notes

A clamp-on "current probe" such as the Tektronix P6021 is a useful means of displaying current waveforms on an oscilloscope. Unfortunately, the low-frequency response is somewhat limited, as shown in the Table.

The more sensitive range on the P6021 is 2 mA/mV, but it has a roll-off of 6 dB per octave below 450 Hz. The compensator counteracts the low-frequency attenuation, and this is achieved by means of C3 and R4 + P1 in the feedback around op amp N1. The latter is a low-noise type, such as the LM725 shown, and even so it is necessary at some point to limit the increasing gain with decreasing frequency; otherwise amplifier noise and drift will overcome the signal. The values shown for C3R3 give a lower limit below 1 Hz. A test square wave of ±10 mA is fed to the current probe so that P1 can be adjusted for minimum droop or overshoot in the output waveform. At high frequencies, the response begins to fall off at 100 kHz.

650 MHz AMPLIFYING PRESCALER PROBE

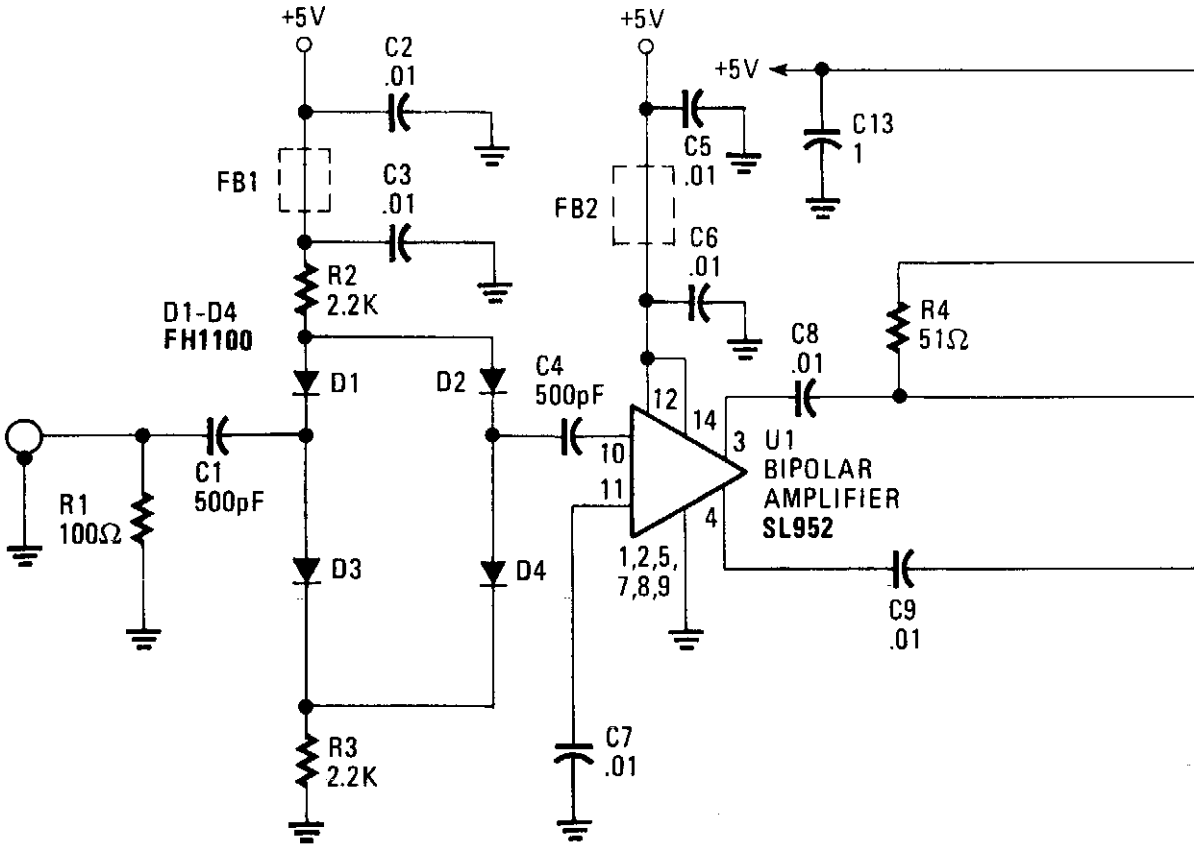

HANDS-ON ELECTRONICS

Fig. 75-5

Circuit Notes

The 650 MHz Prescaler Probe's input is terminated by resistor R1 and is fed through C1 to the diode limiter composed of D1 through D4. Those diodes are forward-biased by the +5 volt supply for small-input signals and, in turn, feed the signal to U1. However, for larger input signals, diodes D1 through D4 will start to turn off, passing less of the signal, and, thus, attenuating it. But even in a full-off state, the FH1100-type diodes will always pass a small part of the input to U1 because of capacitive leakage within the diodes. Integrated circuit U1, a Plessey SL952 bipolar amplifier, capable of 1 GHz operation, provides 20 to 30 dB of gain. The input signal is supplied to pin 10, U1 with

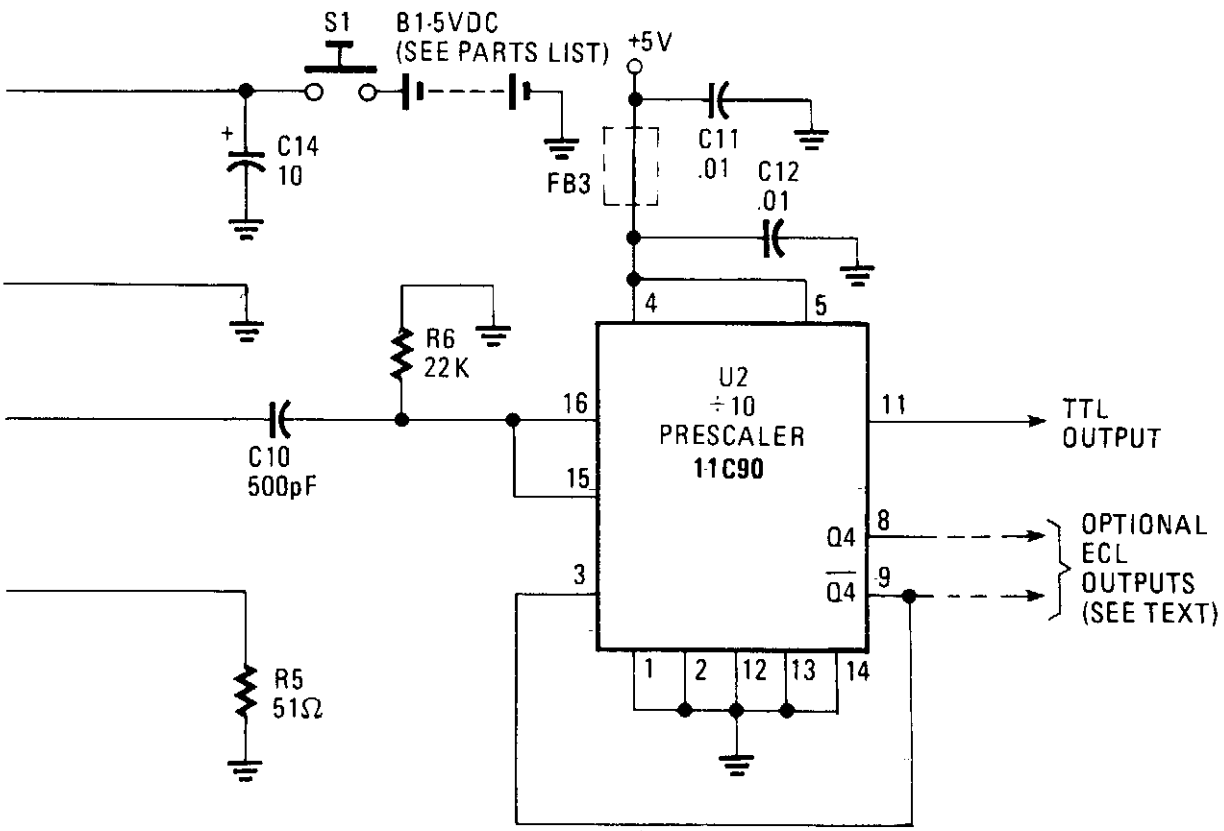

the other input (pin 11) is bypassed to ground. The output signal is taken at pin 3 and pin 4, with pin 3 loaded by R4 and pin 4 by R5.

Integrated circuit 11C90, U2, is a high-speed prescaler capable of 650 MHz operation configured for a divide-by-10 format. A reference voltage internally generated appears at pin 15 and is tied to pin 16, the clock input. This centers the capacitive-coupled input voltage from U1 around the switching threshold-voltage level. An ECL-to-TTL converter in U1 provides level conversion to drive TTL input counters by typing pin 13 low. Therefore, no external ECL to TTL converter is required at the pin 11 output. On the other hand, ECL outputs are available at U2, pin 8 (Q4) and at pin 9 ($\overline{Q4}$), if desired. In that circuit configuration, pin 13 is left open, and U2 will use less power.

TONE PROBE FOR TESTING DIGITAL ICs

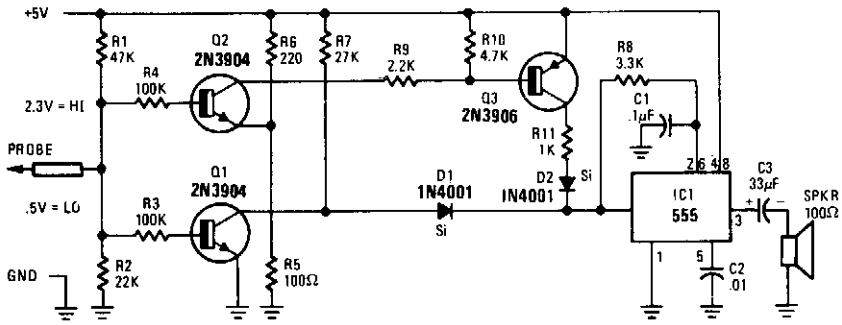

RADIO-ELECTRONICS

Fig. 75-6

Circuit Notes

The tone probe uses sound to tell the status of the signal being probed. The probe's input circuit senses the condition of the signal and produces either a low-pitched tone for low-level signals (less than 0.8 V) or a high-pitched tone for high-level signals (greater than 2 V).

76

Proximity Sensors

The sources of the following circuits are contained in the Sources section beginning on page 694. The figure number contained in the box of each circuit correlates to the source entry in the Sources section.

Proximity Alarm
Field Disturbance Sensor/Alarm

PROXIMITY ALARM

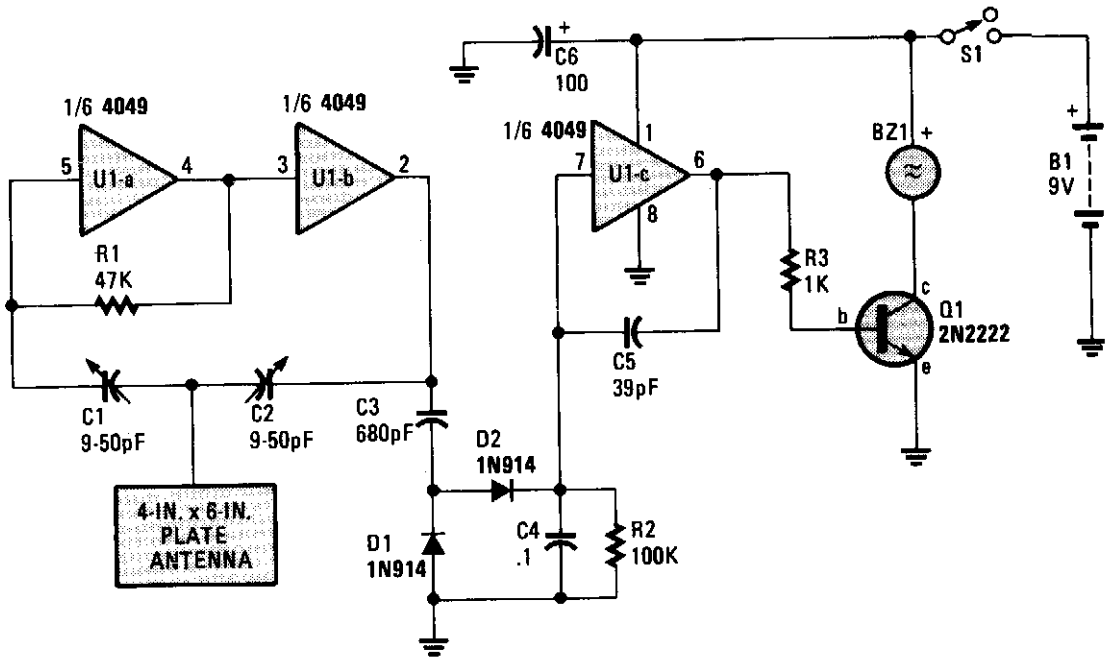

HANDS-ON ELECTRONICS

Fig. 76-1

Circuit Notes

Inverters U1a and U1b are connected in a simple RC oscillator circuit. The frequency is determined by the values of R1, C1, C2, and the internal characteristics of the integrated circuit. As long as the circuit is oscillating, a positive dc voltage is developed at the output of the voltage-coupler circuit: C3, D1, D2 and C4. The dc voltage is applied to the input of U1c—the third inverter amplifier—keeping its output in a low state, which keeps Q1 turned off so that no sound is produced by BZ1. With C1 and C2 adjusted to the most sensitive point, the pickup plate will detect a hand 3 to 5-inches away and sound an alert. Set C1 and C2 to approximately one-half of their maximum value and apply power to the circuit. The circuit should oscillate and no sound should be heard. Using a non-metallic screwdriver, carefully adjust C1 and C2, one at a time, to a lower value until the circuit just ceases oscillation: Buzzer BZ1 should sound off. Back off either C1 or C2 just a smidgen until the oscillator starts up again—that is the most sensitive setting of the circuit.

FIELD DISTURBANCE SENSOR/ALARM

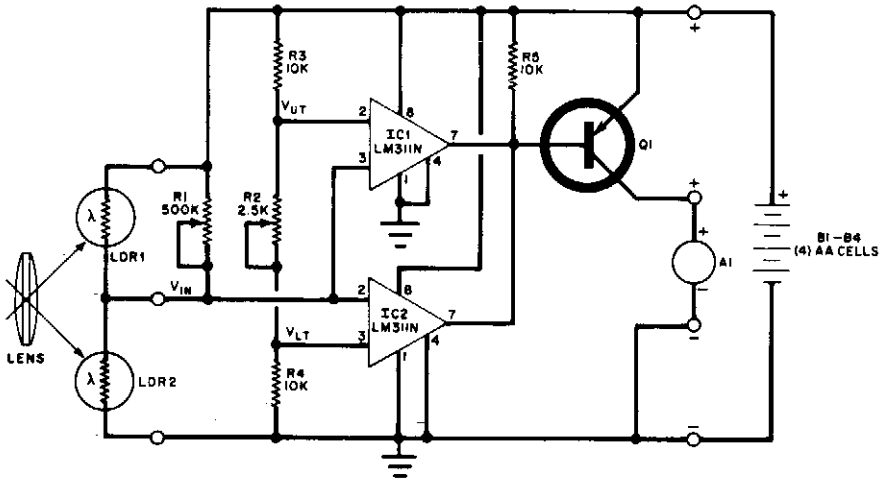

POPULAR ELECTRONICS

Fig. 76-2

Circuit Notes

The change in ambient light triggers the alarm by changing resistance of LDR1 and LDR2.

Q1 = Radio Shack 276-2024
A1 = Mallory SC628P Sonalert
LDR1, LDR2 = Cadmium sulfide photocell, Radio Shack 276-116

77

Pulse Generators

The sources of the following circuits are contained in the Sources section beginning on page 694. The figure number contained in the box of each circuit correlates to the source entry in the Sources section.

Delayed Pulse Generator
Pulse Generator (Astable Multivibrator)
Non-Integer Programmable Pulse Divider

DELAYED PULSE GENERATOR

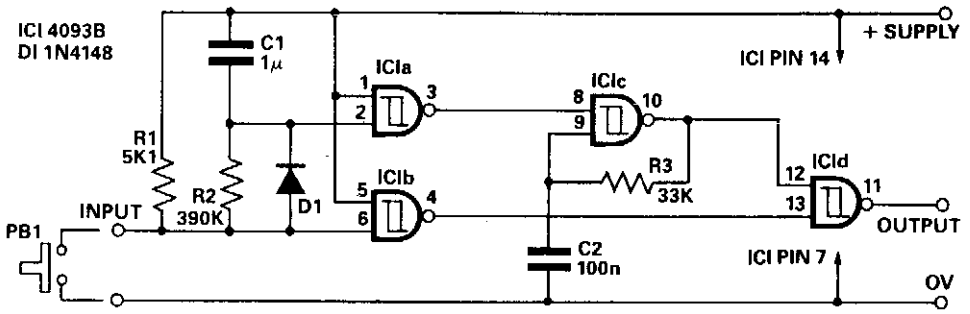

ELECTRONIC ENGINEERING

Fig. 77-1

Circuit Notes

The circuit offers independent control of initial delay and pulse rate. IC1c is connected as a pulse generator whose operation is inhibited by the normally low O/P of the IC1a. When the circuit input goes low i.e., by pressing PB1, IC1b O/P goes high and the circuit O/P goes low thus replicating the input. When the input is kept low capacitor C1 charges via R2 to a point where IC1a O/P goes low. This allows the pulse generator IC1c to start and "rapid fire" pulses appear at the circuit O/P. When the circuit input returns to the high state C1 is rapidly discharged via D1 and R1. The value of R2 and C1 control the initial delay while R3 and C2 control the pulse rate. The values given will give a delay of around 0.5 seconds and a pulse rate of 200/300 Hz depending on supply voltage. PB1 may be replaced by an open collector TTL gate or a common emitter transistor stage if required.

PULSE GENERATOR (ASTABLE MULTIVIBRATOR)

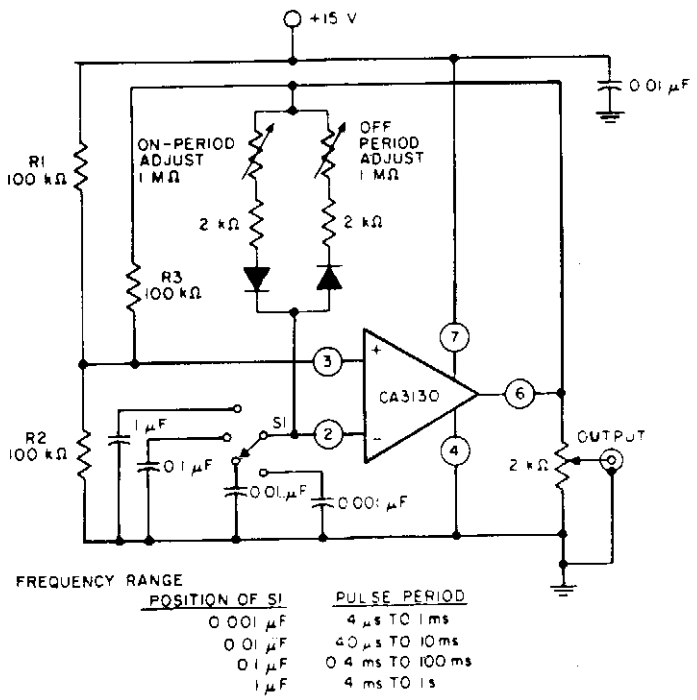

RCA

Fig. 77-2

Circuit Notes

Resistors R1 and R2 bias the CA3130 to the mid-point of the supply-voltage, and R3 is the feedback resistor. The pulse repetition rate is selected by positioning S1 to the desired position and the rate remains essentially constant when the resistors which determine on-period and off-period are adjusted.

NON-INTEGER PROGRAMMABLE PULSE DIVIDER

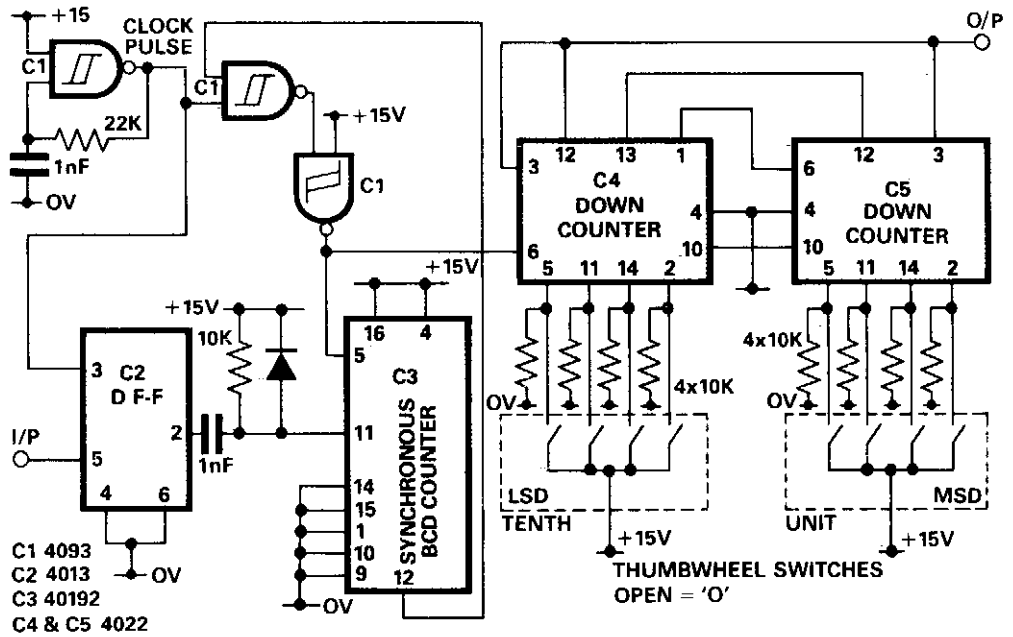

Fig. 77-3

Circuit Notes

In applications where the period of the input pulses is uneven and the divider is required to cover a wide range of frequencies, the non-integer programmable pulse divider shown can be used. The purpose of the D-type flip-flop (IC2) is to synchronize the input signal with the clock pulse. When the clock pulse changes from low to high and the input is high, IC2 output goes high. Subsequently, IC3 resets to zero and starts counting up. The number of pulses at the output of IC3 is ten time the input pulse. IC4 and IC5 are cascaded to form a two decade programmable down counter.

78

Radiation Detectors

The sources of the following circuits are contained in the Sources section beginning on page 694. The figure number contained in the box of each circuit correlates to the source entry in the Sources section.

Micropower Radioactive Radiation Detector
Pocket-Sized Geiger Counter
Photomultiplier Output-Gating Circuit

MICROPOWER RADIOACTIVE RADIATION DETECTOR

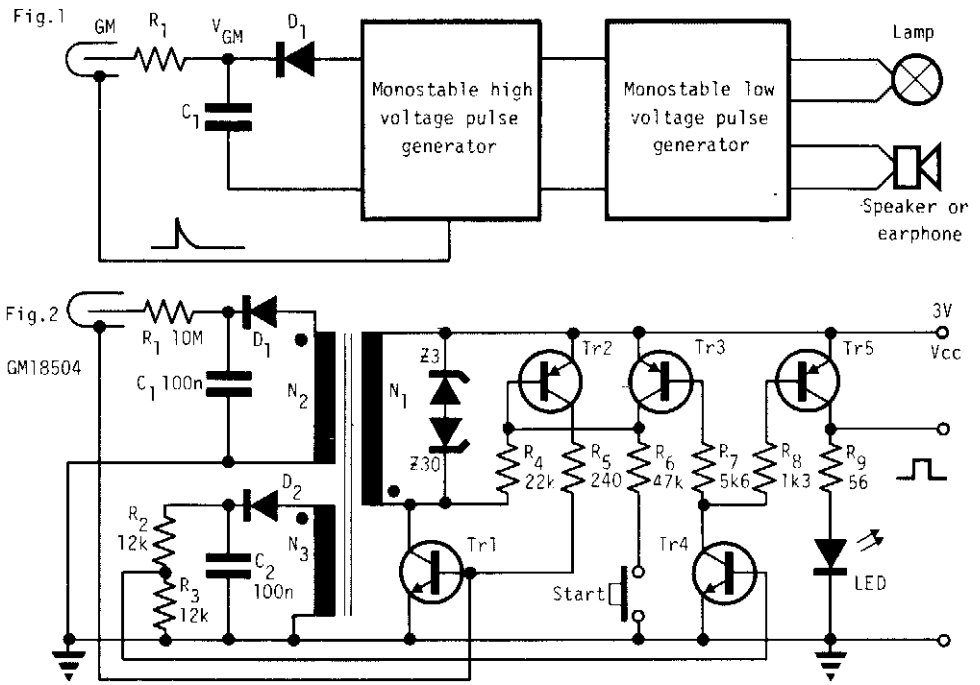

ELECTRONIC ENGINEERING

Fig. 78-1

Circuit Notes

In the absence of radiation, no current is drawn. At normal background radiation levels the power consumption is extremely low. The instrument may be left on for several months without changing batteries. In this way the detector is always ready to indicate an increase in radiation. An LED is used as an indicator lamp. With background radiation it draws less than 50 μA. A ferrite pot core is used for the transformer with N1 = 30, N2 = 550, and N3 = 7. Using two 1.5V batteries with 0.5 Ah total capacity, the detector can work at background radiation levels for 0.5 Ah $\div$ 50μA = 10,000 hours, which is more than a year.

POCKET-SIZED GEIGER COUNTER

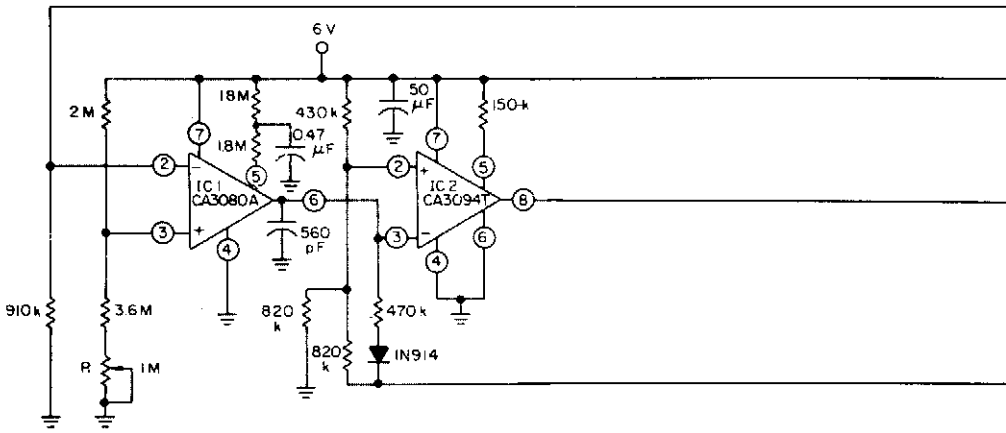

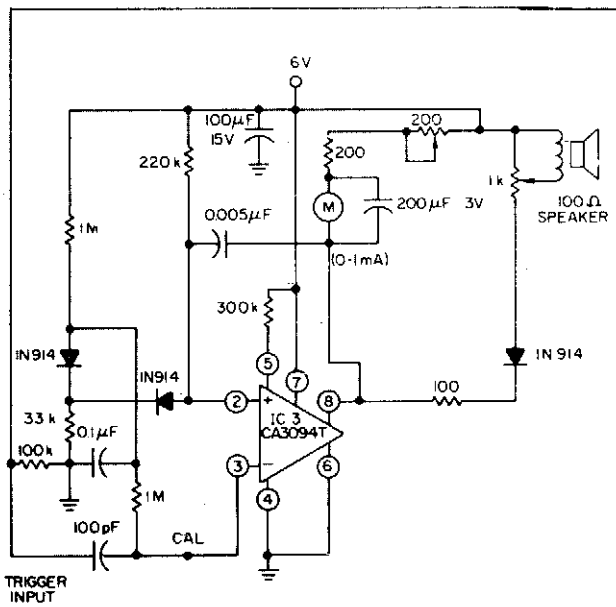

ELECTRONIC DESIGN

Fig. 78-2

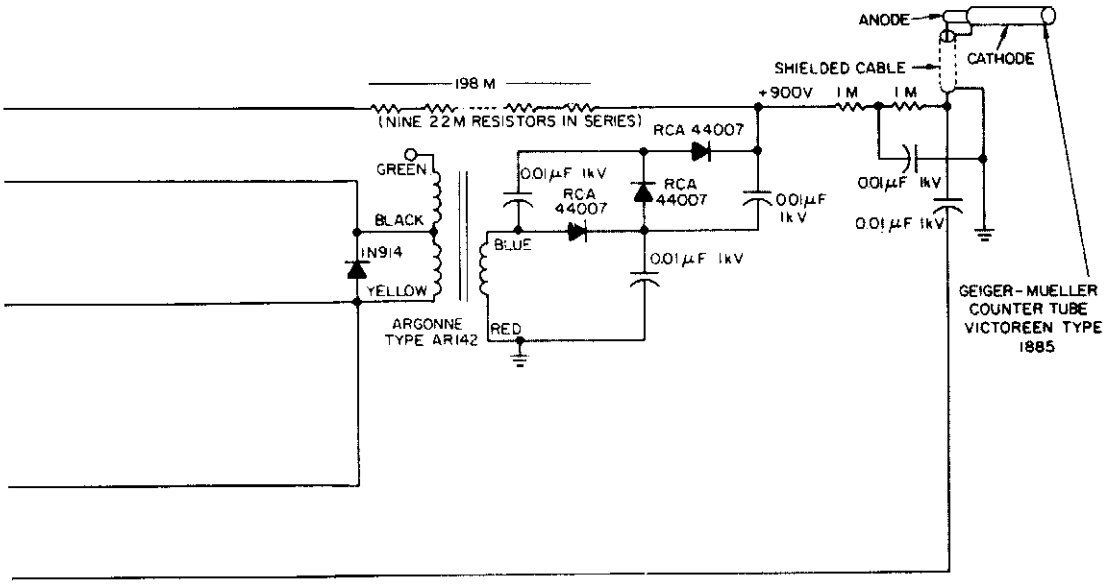

Circuit Notes

A single 6.75 V mercury battery powers the counter, which features a 1 mA count-rate meter as well as an aural output. A regulated 900 V supply provides stable operation of the counter tube. A multivibrator, built around a differential power amplifier IC2, drives the step-up transformer. Comparator IC1 varies the multivibrator duty cycle to provide a constant 900 V. The entire regulated supply draws less than 2 mA. A one-shot multivibrator, built with IC3, provides output pulses that have constant width and amplitude. Thus the average current through the meter is directly proportional to the pulse-rate output from the counter tube. And the constant-width pulses also drive the speaker. Full-scale meter deflection (1 mA) represents 5000 counts/min, or 83.3 pulses/s. A convenient calibration checkpoint can be provided on the meter scale for 3600 ppm (60 pulses/s.)

PHOTOMULTIPLIER OUTPUT-GATING CIRCUIT

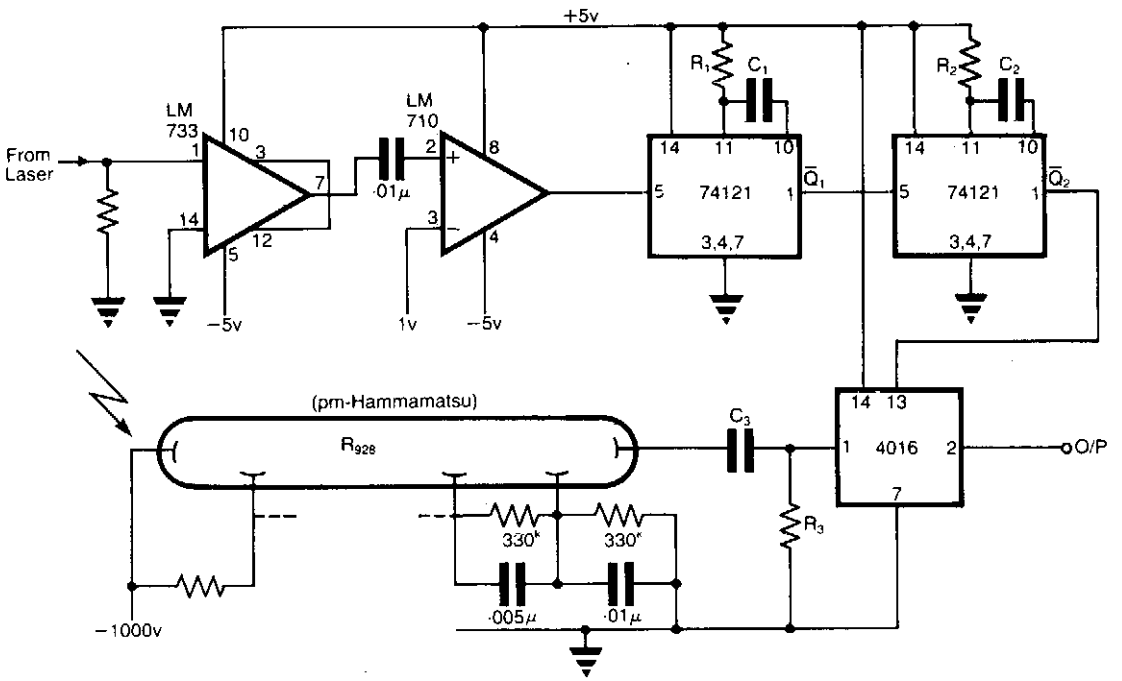

Fig. 78-3

ELECTRONIC ENGINEERING

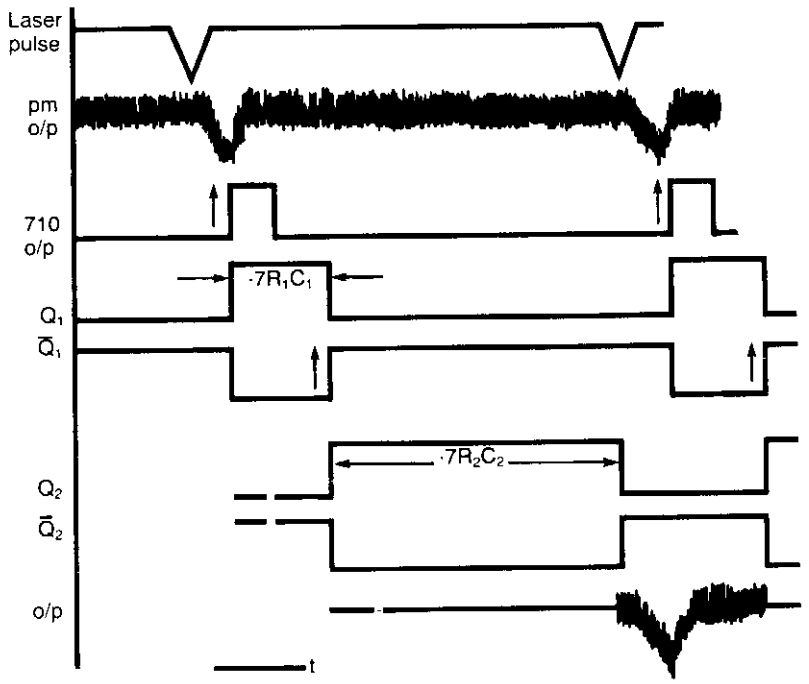

Fig 2

Circuit Notes

The application involves observing the light pulse emerging from a thick specimen after transillumination by a laser pulse. Pulses derived from the laser source are amplified using a Video Amplifier LM733. The reference level is set to 1 V in the comparator LM 710, to provide the necessary trigger pulses for the monostable multivibrator 74121. The laser pulses have a repetition frequency of 500 Hz and suitable values are as below:

R1 = 33 k ohm, C1 = 22 pF
R2 = 33 k ohm, C2 = 68 nF

The pulse width for each monostable is approximately given by tw = 0.7 RC. R3 and C3 is a high pass filter. The method therefore permits the use of low cost components having moderate response times for extracting the pulse of interest.

79

Radar Detectors

The sources of the following circuits are contained in the Sources section beginning on page 694. The figure number contained in the box of each circuit correlates to the source entry in the Sources section.

One-Chip Radar Detection Circuit
Radar Signal Detector

ONE-CHIP RADAR DETECTION CIRCUIT

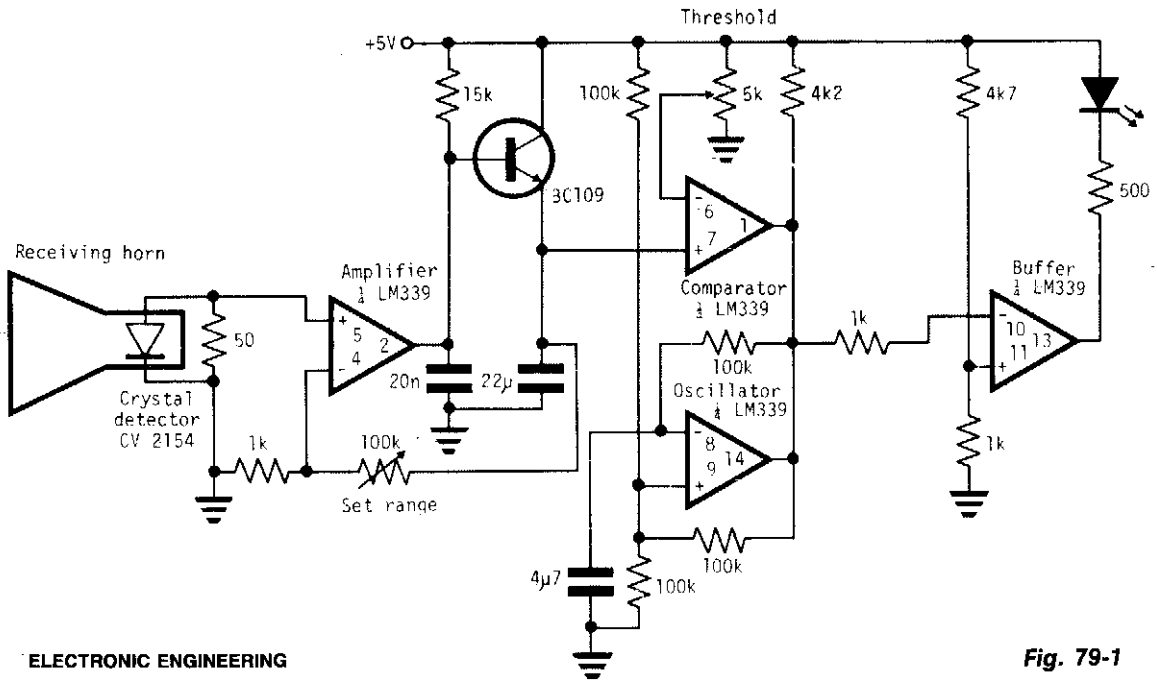

ELECTRONIC ENGINEERING

Fig. 79-1

Circuit Notes

A simple X-band radar detector is capable of indicating changes in rf radiation strength at levels down to 2 mW/cm^2. Radiation falling on the detector diode, produces a voltage at the input of an amplifier whose gain may be adjusted to vary the range at which the warning is given. The amplifier output drives a voltage comparator with a variable threshold set to a level that avoids false alarms. The comparator output is connected in the wired-OR configuration with the open collector output of an oscillator running at a frequency of 2 Hz. In the absence of a signal, the comparator output level is low, inhibiting the oscillator output stage and holding the buffer so the lamp is off. When a signal appears, the comparator output goes high, removing the lock from the oscillator which free-runs, switching the lamp on and off at 2 Hz.

RADAR SIGNAL DETECTOR

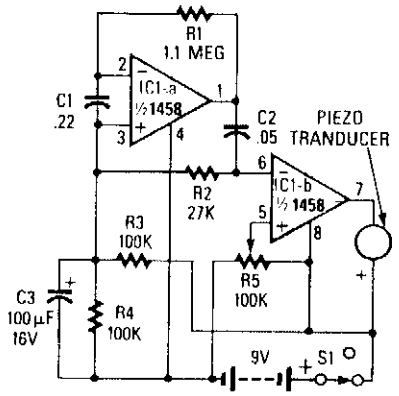

FIG. 1—THE ECONOMY RADAR DETECTOR needs only one IC and a few discrete components.

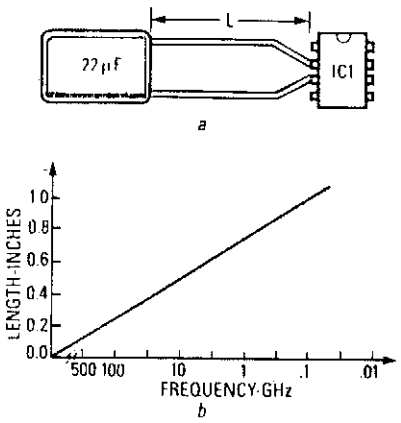

FIG. 3—VARY THE LEAD LENGTHS OF C1 to tune the input circuit.

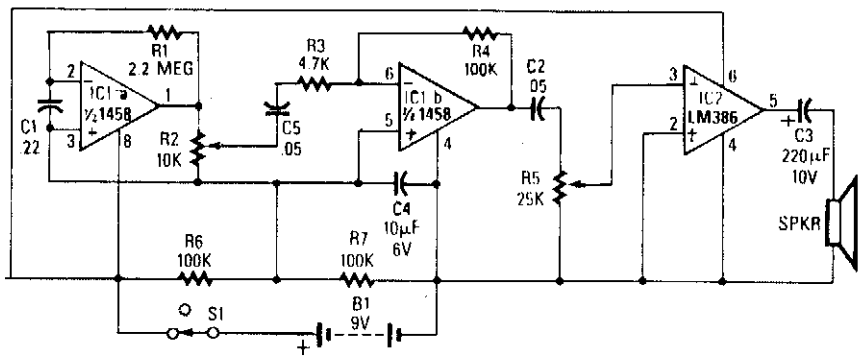

FIG. 2—DELUXE RADAR DETECTOR adds a buffer amplifier and an audio power amp to drive a speaker.

Circuit Notes

The circuit can be tuned to respond to signals between 50 MHz and 500 GHz. The economy model is shown in Fig. 1, and the deluxe model is shown in Fig. 2. The first op amp in each circuit functions as a current-to-voltage converter. In the economy model IC1b buffers the output to drive the piezo buzzer. The deluxe model functions in a similar manner except that IC1b is configured as a ×20 buffer amplifier to drive the LM386. In both circuits C1 functions as a "transmission line" that intercepts the incident radar signal. The response may be optimized by trimming C1's lead length for the desired frequency. Typically the capacitor's leads should be 0.5-0.6 inches long.

80
Ramp Generators

The sources of the following circuits are contained in the Sources section beginning on page 694. The figure number contained in the box of each circuit correlates to the source entry in the Sources section.

Ramp Generator
Voltage Controlled Ramp Generator

RAMP GENERATOR

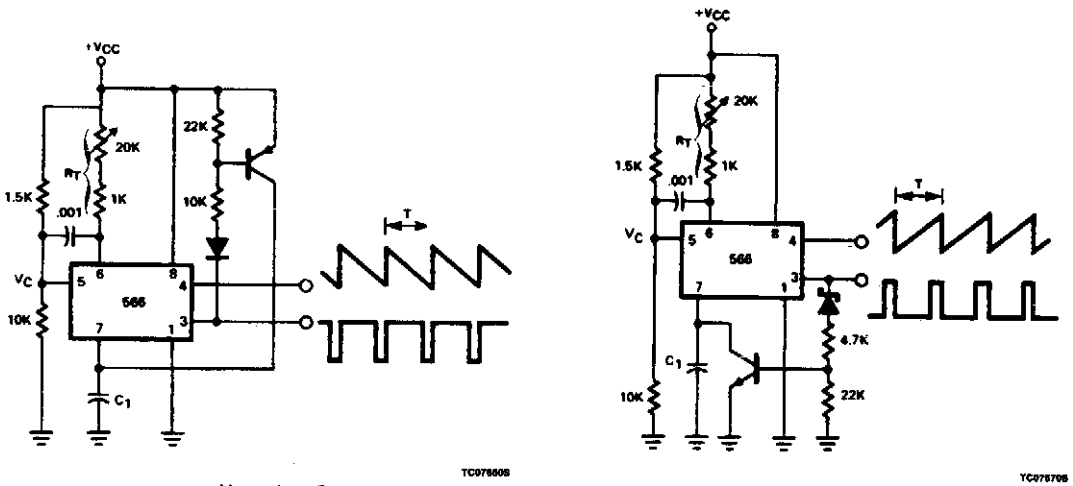

a. Negative Ramp

b. Positive Ramp

SIGNETICS

Fig. 80-1

Circuit Notes

The 566 can be wired as a positive or negative ramp generator. In the positive ramp generator, the external transistor driven by the Pin 3 output rapidly discharges C1 at the end of the charging period so that charging can resume instantaneously. The pnp transistor of the negative ramp generator likewise rapidly charges the timing capacitor C1 at the end of the discharge period. Because the circuits are reset so quickly, the temperature stability of the ramp generator is excellent. The period

$$T \text{ is } \frac{1}{2f_o}$$

where f_o is the 566 free-running frequency in normal operation. Therefore,

$$T = \frac{1}{2f_o} = \frac{R_T C_1 V_{CC}}{.5(V_{CC} - V_C)} \quad (1)$$

where V_C is the bias voltage at Pin 5 and R_T is the total resistance between Pin 6 and V_{CC}. Note that a short pulse is available at Pin 3. (Placing collector resistance in series with the external transistor collector will lengthen the pulse.)

VOLTAGE CONTROLLED RAMP GENERATOR

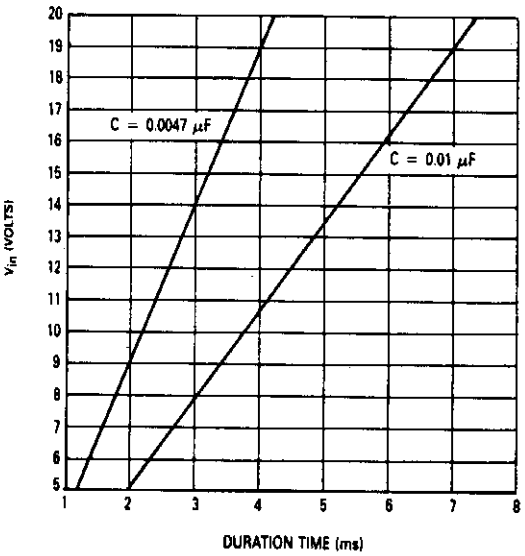

Voltage versus Ramp Duration Time of VCRG

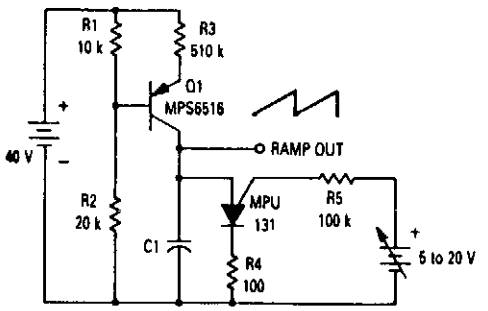

Voltage Controlled Ramp Generator (VCRG)

MOTOROLA

Fig. 80-2

Circuit Notes

The current source formed by Q1 in conjunction with capacitor C1 set the duration time of the ramp. As the positive dc voltage at the gate is changed, the peak point firing voltage of the PUT is changed, which changes the duration time, i.e., increasing the supply voltage increases the peak point firing voltage causing the duration time to increase.

81
Receivers

The sources of the following circuits are contained in the Sources section beginning on page 694. The figure number contained in the box of each circuit correlates to the source entry in the Sources section.

Car Radio with Capacitive Diode Tuning and
Electronic MW/LW Switching
Receiver Monitor
PLL/BC Receiver

CAR RADIO WITH CAPACITIVE DIODE TUNING AND ELECTRONIC MW/LW SWITCHING

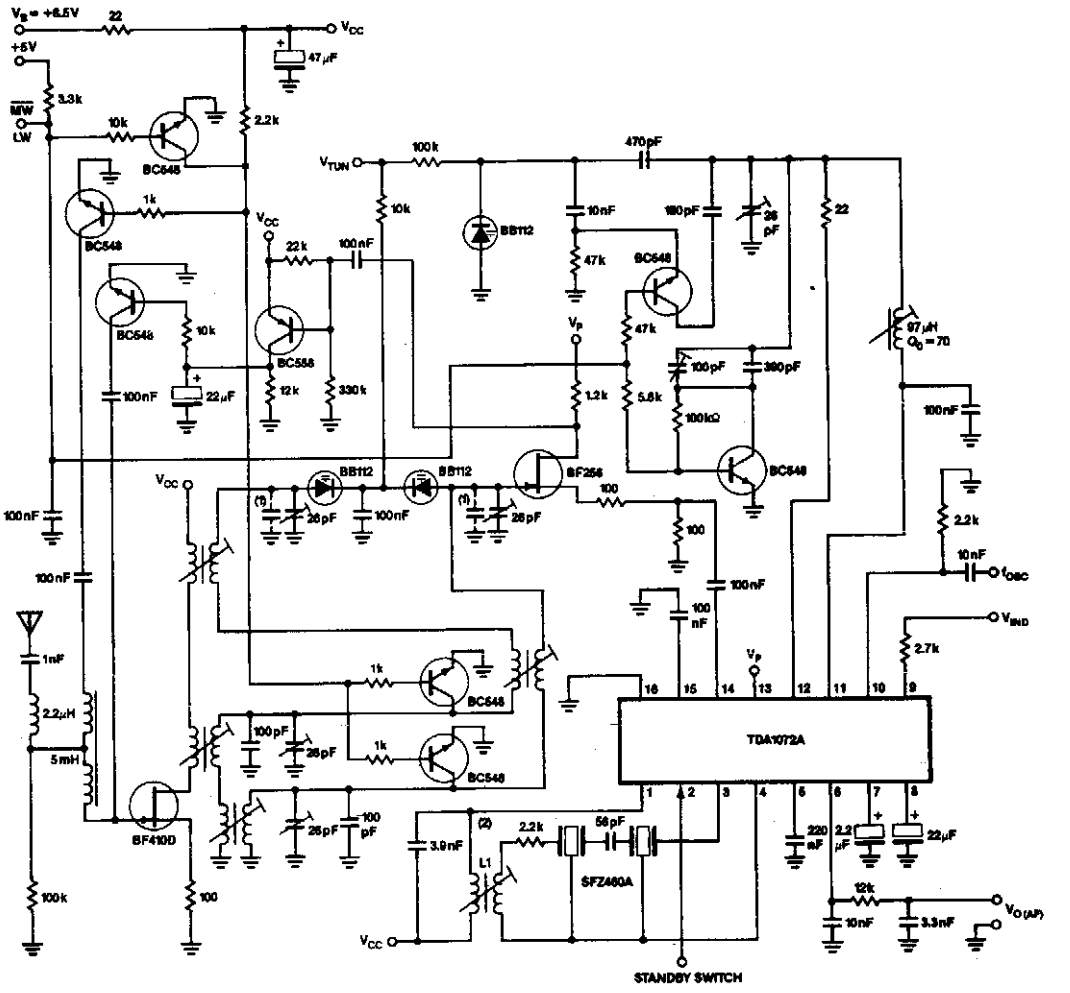

NOTES:
1. Values of capacitors depend on the selected group of capacitive diodes BB112.
2. For IF filter and coil data refer to Block Diagram.
3. The circuit includes pre-stage AGC optimized for good large-signal handling.

SIGNETICS

Fig. 81-1

RECEIVER MONITOR

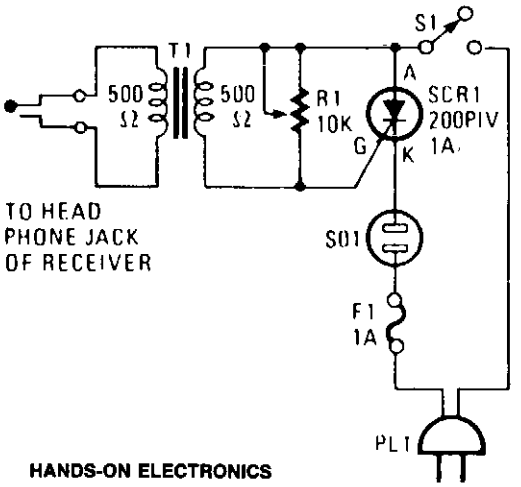

Fig. 81-2

Circuit Notes

The alarm plugs into the earphone jack on a receiver. Then when a signal (normally fed to the headphones) is detected and applied to the gate of SCR1, it conducts, sounding whatever alarm is connected to SO1. The signaling device can be an audible alarm or a lamp. Variable resistor R1 functions as a sensitivity control so that background noises won't trigger the alarm.

PLL/BC RECEIVER

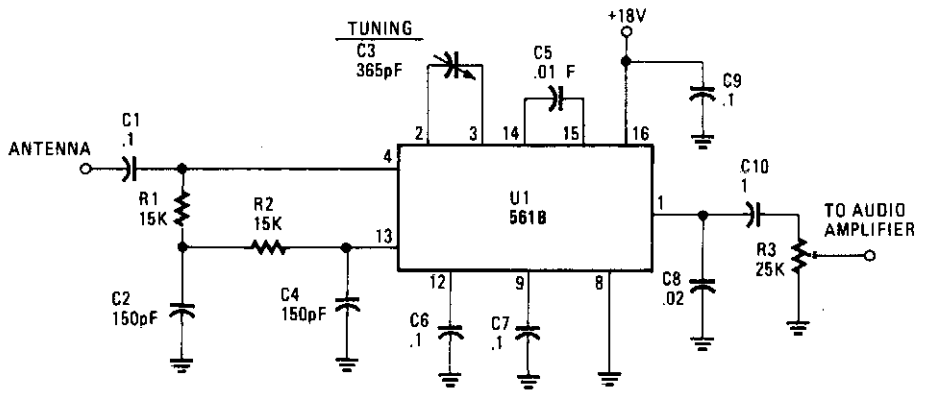

Fig. 81-3

Circuit Notes

This simple AM circuit uses a 561B. There's no inductance/capacitance tuning circuit. The 365 pF capacitor connected between pins 2 and 3 does all the tuning. The circuit needs a good outside antenna and a solid ground. And if you want to further improve operation, stick a broadband amplifier in front of the receiver. Just make sure the input voltage does not climb over 0.5 volt rms.

82
Rectifier Circuits

The sources of the following circuits are contained in the Sources section beginning on page 694. The figure number contained in the box of each circuit correlates to the source entry in the Sources section.

Absolute-Value, "Ideal" Full-Wave Rectifier
Half-Wave Rectifier

ABSOLUTE-VALUE, "IDEAL" FULL-WAVE RECTIFIER

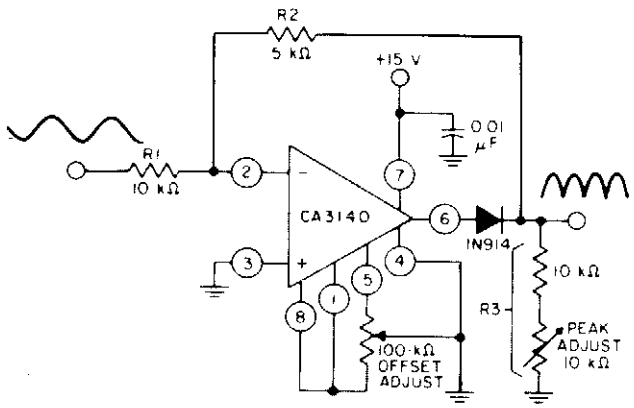

$$\text{GAIN} = -\frac{R2}{R1} = X = -\frac{R3}{R1 + R2 + R3}$$

$$R3 = R1\left(\frac{X + X^2}{1 - X}\right)$$

$$\text{FOR } X = 0.5 \quad \frac{5\,k\Omega}{10\,k\Omega} = \frac{R2}{R1}$$

$$R3 = 10\,k\Omega\left(\frac{0.75}{0.5}\right) = 15\,k\Omega$$

20 V p-p INPUT BW(-3dB) = 290 kHz, DC OUTPUT (AVG) = 3.2 V

GENERAL ELECTRIC /RCA

Fig. 82-1

Circuit Notes

The circuit uses a CA3140 BiMOS op amp in an inverting gain configuration. When equality of two equations shown in satisfied, full-wave output of circuit is symmetrical.

HALF-WAVE RECTIFIER

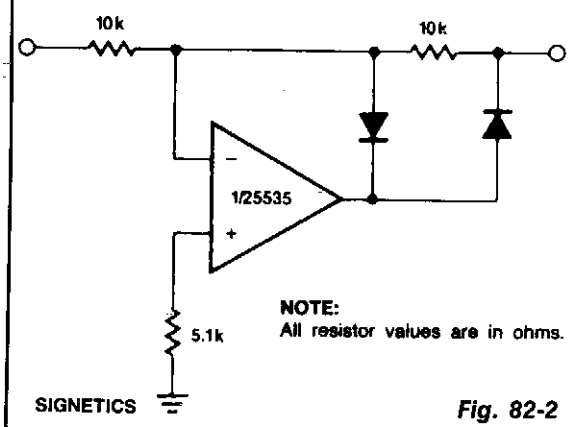

SIGNETICS

Fig. 82-2

Circuit Notes

The circuit provides for accurate half-wave rectification of the incoming signal. For positive signals, the gain is 0; for negative signals, the gain is −1. By reversing both diodes, the polarity can be inverted. This circuit provides an accurate output, but the output impedance differs for the two input polarities and buffering may be needed. The output must slew through two diode drops when the input polarity reverses. The NE5535 device will work up to 10 kHz with less than 5% distortion.

83
Relay Circuits

The sources of the following circuits are contained in the Sources section beginning on page 694. The figure number contained in the box of each circuit correlates to the source entry in the Sources section.

Relay Driver Provides Delay and Controls Closure Time
TRIAC Relay-Contact Protection
TR Circuit

RELAY DRIVER PROVIDES DELAY AND CONTROLS CLOSURE TIME

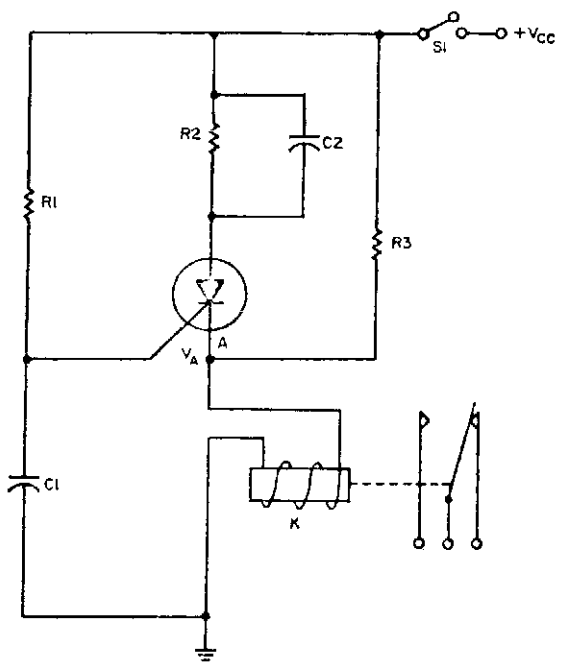

Fig. 83-1

ELECTRONIC DESIGN

Circuit Notes

The relay operates a certain time, t_d, after power is applied to it, and then it operates for a length of time, t_c. The SCR fires when the voltage on C1 reaches V_A. This operates the relay, which stays activated until the current charging C2 drops below the dropout current. To keep the relay in its activated position indefinitely ($t_c = \infty$), eliminate C2 and choose R2 just large enough to keep the relay coil current within its related limits. Typical component values for t_d = 30 seconds and t_c = 2 seconds are: R1 = 1.5 megohms, R2 = 10 k ohms, R3 = 3 k ohms, C1 = 47 μF, and C2 = 100 μF. The SCR is a 2N1877 and the relay is a Potter Brumfield PW-5374. A value of 12 Vdc is assumed for V_{cc}.

TRIAC RELAY-CONTACT PROTECTION

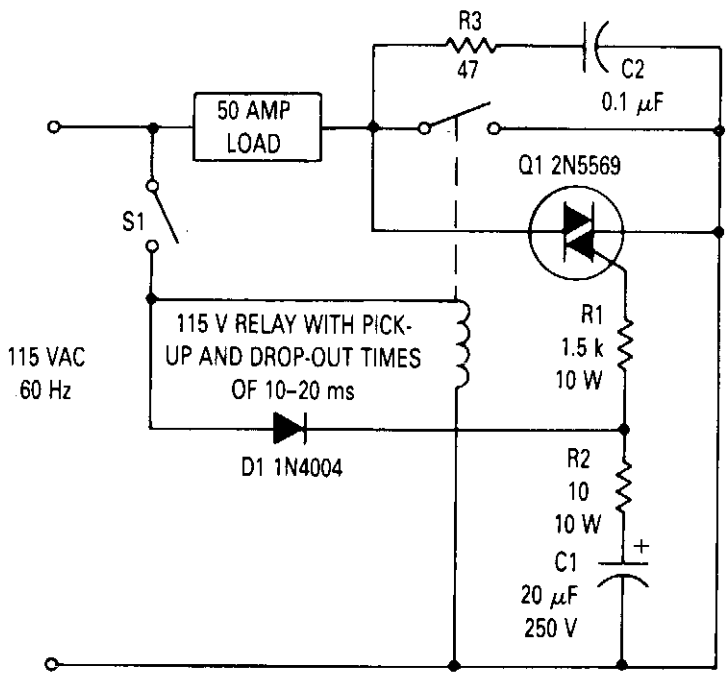

MOTOROLA

Fig. 83-2

Circuit Notes

This circuit can be used to prevent relay contact arcing for loads up to 50 amperes. There is some delay between the time a relay coil is energized and the time the contacts close. There is also a delay between the time the coil is de-energized and the time the contacts open. For the relay used in this circuit both times are about 15 ms. The TRIAC across the relay contacts will turn on as soon as sufficient gate current is present to fire it. This occurs after switch S1 is closed but before the relay contacts close. When the contacts close, the load current passes through them, rather than through the TRIAC, even though the TRIAC is receiving gate current. If S1 should be closed during the negative half cycle of the ac line, the TRIAC will not turn on immediately but will wait until the voltage begins to go positive, at which time diode D1 conducts providing gate current through R1. The maximum time that could elapse before the TRIAC turns on is 8-⅓ ms for the 60 Hz supply. This is adequate to ensure that the TRIAC will be on before the relay contact closes.

TR CIRCUIT

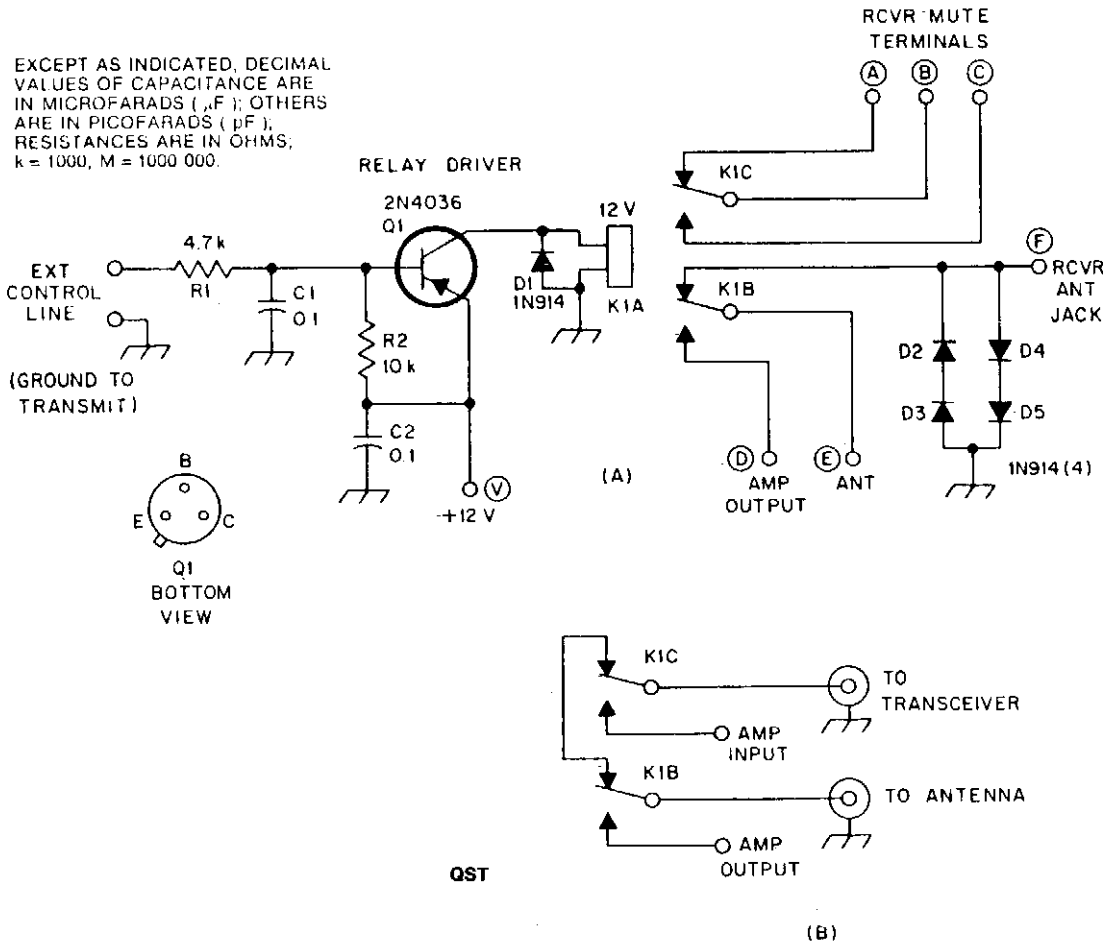

Fig. 83-3

Circuit Notes

C1 and C2 are disc ceramic. R1 and R2 are ¼ or ½ W carbon composition resistors. K1 is a 12 V DPDT DIP relay. Illustration A shows how to connect the relay contacts for use with a separate transmitter-receiver combination. The circuit at B is for amplifier use with a transceiver.

84
Resistance/Continuity Meters

The sources of the following circuits are contained in the Sources section beginning on page 694. The figure number contained in the box of each circuit correlates to the source entry in the Sources section.

Single Chip Checks Resistance
Simple Continuity Tester for PCB's
Simple Continuity Tester
Adjustable, Audible Continuity Tester for Delicate Circuits

SINGLE CHIP CHECKS RESISTANCE

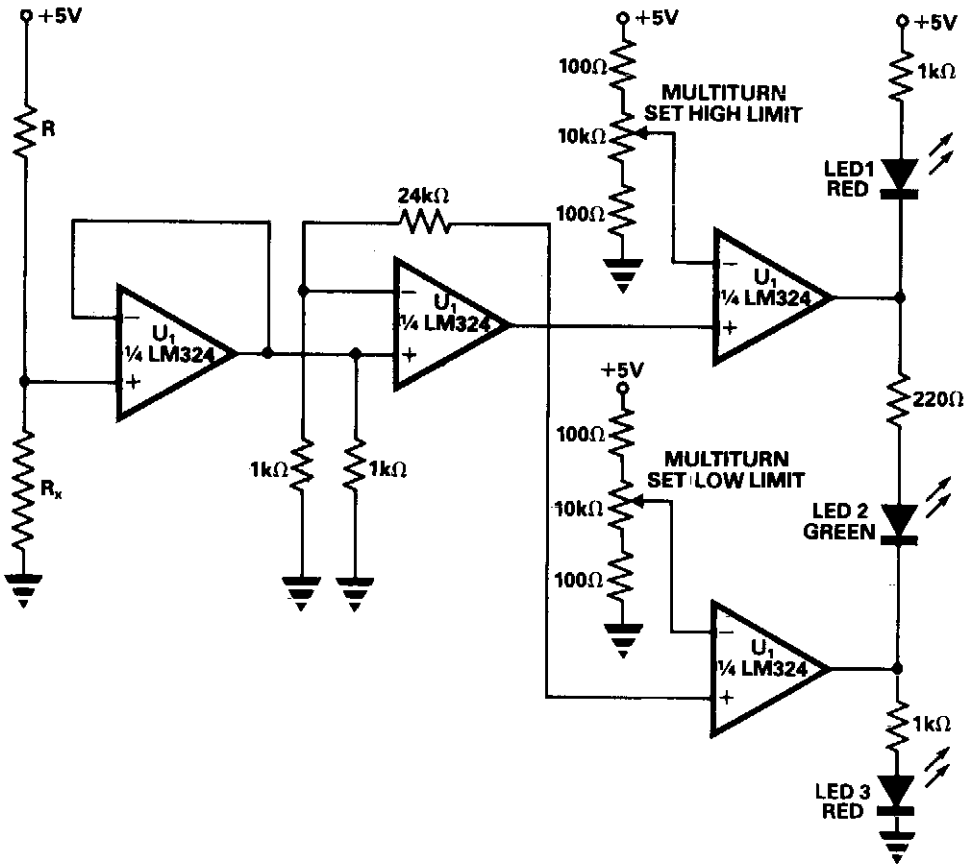

ELECTRONIC ENGINEERING

Fig. 84-1

Circuit Notes

A simple tester can be used for routine checks for resistance on production lines of relays, coils, or similar components where frequent changes in resistance to be tested are not required. The tester is built around a single quad op amp chip, the LM324. R, which is chosen to be around 80 times the resistance to be checked, and the 5 V supply form the current source. The first op amp buffers the voltage generated across the resistance under test, R_x. The second op amp amplifies this voltage. The third and fourth op amps compare the amplified voltage with high and low limits. The high and low limits are set on multiturn presets with high and low limit resistors connected in place of R_x. LED 1 (red) lights when the resistance is high. LED 2 (green) shows that the resistance is within limits. LED 3 (red) indicates that the resistance is low.

SIMPLE CONTINUITY TESTER FOR PCBs

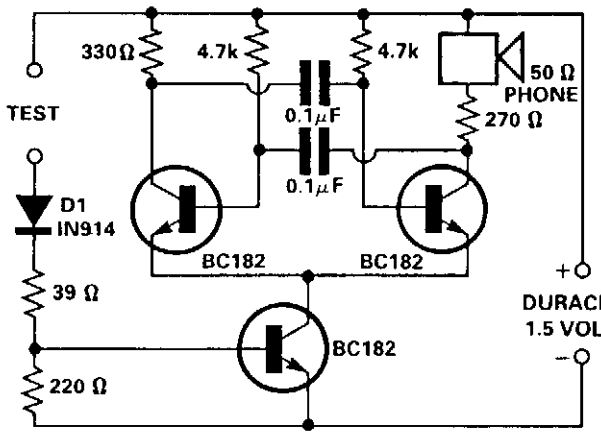

Fig. 84-2

Circuit Notes

This tester is for tracing wiring on Printed Circuit Boards. Resistors below 50 ohms act as a short circuit; above 100 ohms as an open circuit. The circuit is a simple multivibrator switched on by transistor T3. The components in the base of T3 are D1, R1, R2, and the test resistance. With a 1.5 volt supply, there is insufficient voltage to turn on a semiconductor connected to the test terminals.

SIMPLE CONTINUITY TESTER

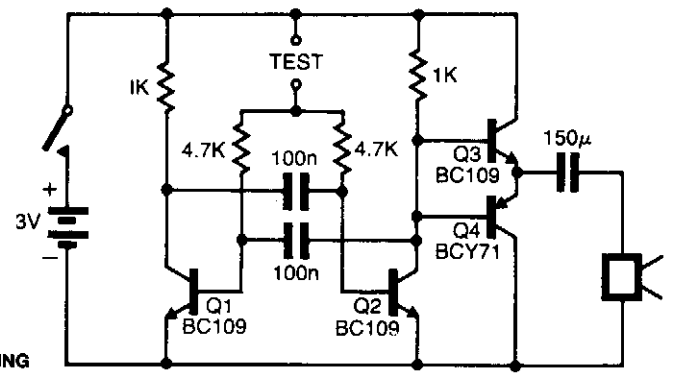

Fig. 84-3

Circuit Notes

The pitch of the tone is dependent upon the resistance under test. The tester will respond to resistance of hundreds of kilohms, yet it is possible to distinguish differences of just a few tens of ohms in low-resistance circuits. Q1 and Q2 form a multivibrator, the frequency of which is influenced by the resistance between the test points. The output stage Q3 and Q4 will drive a small loudspeaker or a telephone earpiece.

SIMPLE CONTINUITY TESTER FOR PCBs

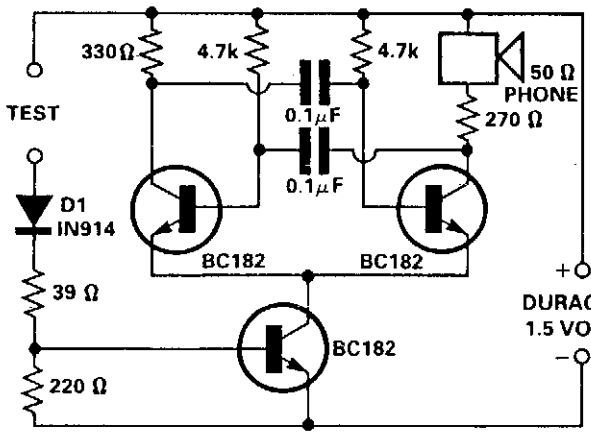

Fig. 84-2

Circuit Notes

This tester is for tracing wiring on Printed Circuit Boards. Resistors below 50 ohms act as a short circuit; above 100 ohms as an open circuit. The circuit is a simple multivibrator switched on by transistor T3. The components in the base of T3 are D1, R1, R2, and the test resistance. With a 1.5 volt supply, there is insufficient voltage to turn on a semiconductor connected to the test terminals.

SIMPLE CONTINUITY TESTER

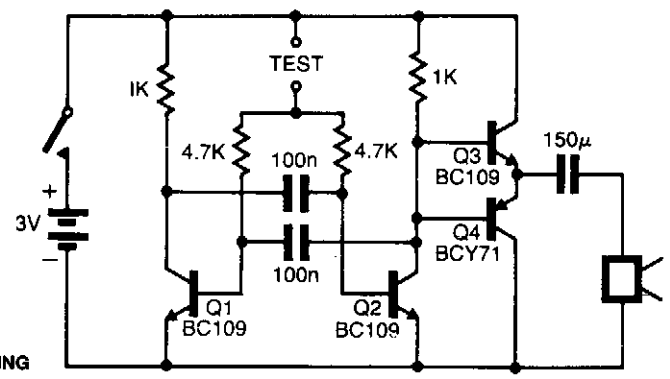

Fig. 84-3

Circuit Notes

The pitch of the tone is dependent upon the resistance under test. The tester will respond to resistance of hundreds of kilohms, yet it is possible to distinguish differences of just a few tens of ohms in low-resistance circuits. Q1 and Q2 form a multivibrator, the frequency of which is influenced by the resistance between the test points. The output stage Q3 and Q4 will drive a small loudspeaker or a telephone earpiece.

ADJUSTABLE, AUDIBLE CONTINUITY TESTER FOR DELICATE CIRCUITS

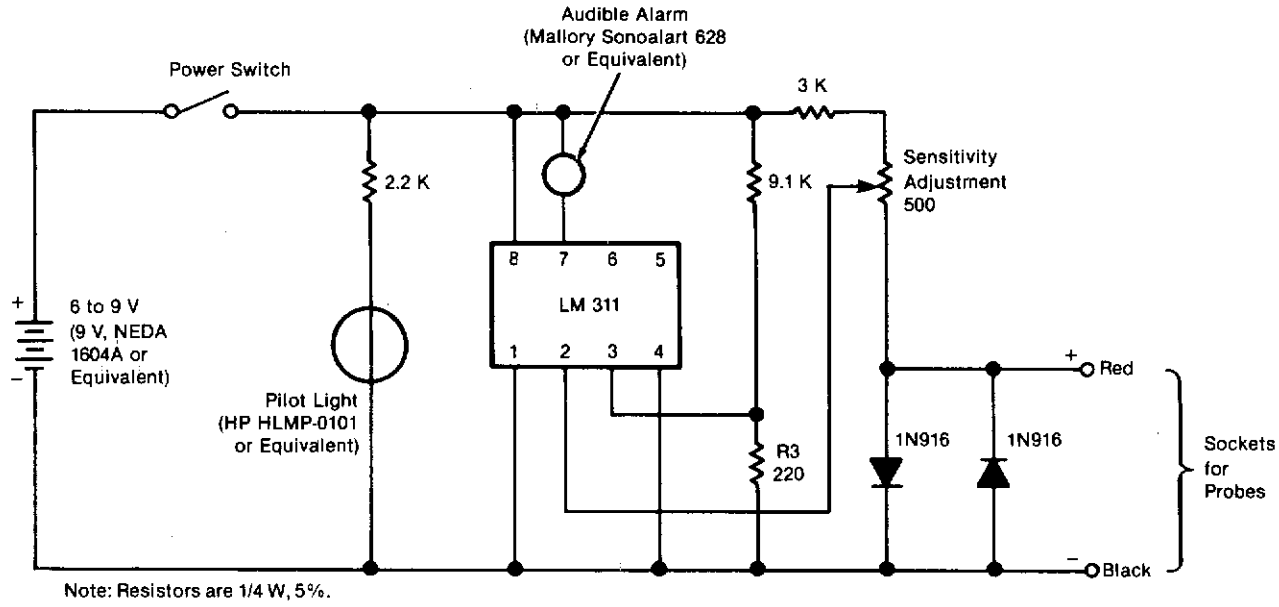

NASA

Fig. 84-4

Circuit Notes

The tester gives an audible indication, making it unnecessary for the user to look directly at the instrument to observe a meter reading. In addition, the current and voltage of the tester are strictly limited. It can apply no more than 0.6 volts dc and no more than 3 mA through the probes. It can therefore be used safely on circuit boards in which semiconductor components have been installed, and on complementary metal oxide/semiconductor integrated circuits, which are highly susceptible to damage during testing. The tester can be adjusted to indicate continuity below any resistance value up to 35 ohms. For example, if the user sets the tester to 30 ohms, the unit will emit an audible tone whenever the resistance between the probes is 30 ohms or less; if, for example, the resistance is 30.2 ohms, the unit will remain silent.

85
RF Amplifiers

The sources of the following circuits are contained in the Sources section beginning on page 694. The figure number contained in the box of each circuit correlates to the source entry in the Sources section.

Low-Distortion 1.6 to 30 MHz SSB Driver
1 Watt, 2.3 GHz Amplifier
5-W RF Power Amplifier
6-Meter Preamplifier Provides 20 dB Gain and Low NF
125 Watt 150 MHz Amplifier
6-Meter Kilowatt Amplifier
Broadcast-Band RF Amplifier
Improved RF Isolation Amplifier
A 10 Watt 225-400 MHz Amplifier

LOW-DISTORTION 1.6 TO 30 MHz SSB DRIVER

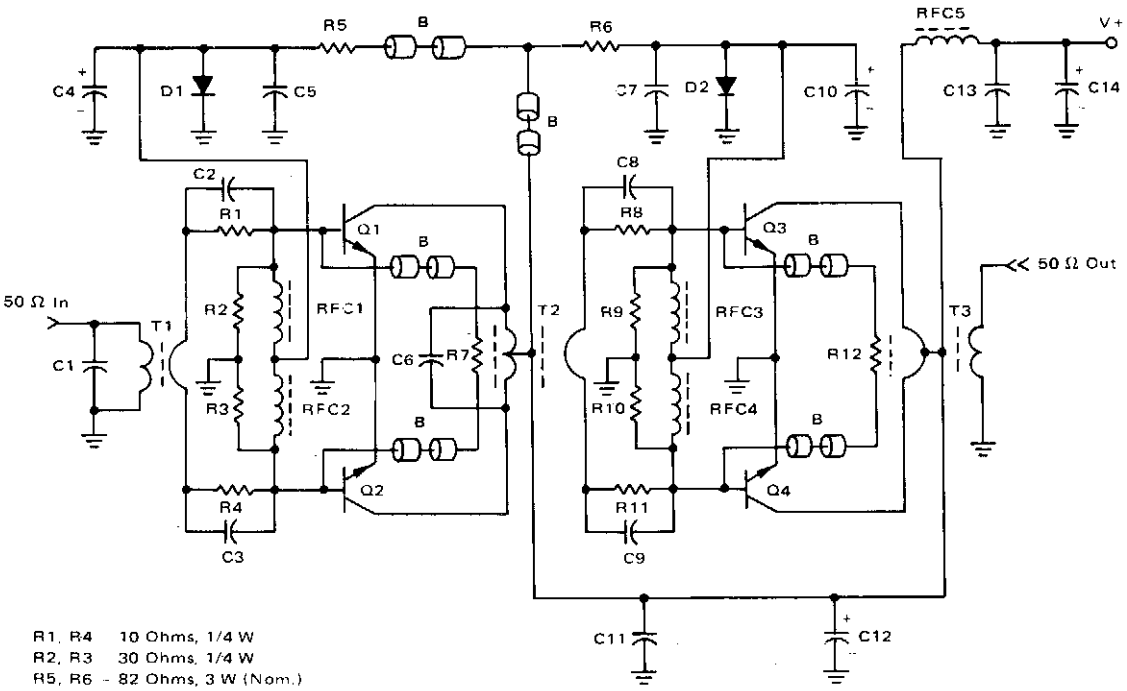

R1, R4 — 10 Ohms, 1/4 W
R2, R3 — 30 Ohms, 1/4 W
R5, R6 — 82 Ohms, 3 W (Nom.)
R7 — 47 Ohms, 1/4 W
R8, R11 — 6.8 Ohms, 1/4 W
R9, R10 — 15 Ohms, 1/4 W
R12 — 130 Ohms, 1/4 W

C1 — 39 pF Dipped Mica
C2, C3 — 680 pF Ceramic Disc
C4, C10 — 220 μF, 4 V, Tantalum
C5, C7, C11, C13 — 0.1 μF Ceramic Disc
C6 — 56 pF Dipped Mica
C8, C9 — 1200 pF Ceramic Disc
C12, C14 — 10 μF, 25 V Tantalum

RFC5 — Ferroxcube VK200 19/4B
RFC1, 2, 3, 4 — 10 μH Molded Choke

B — Ferrite Beads (Fair-Rite Prod. Corp. #2643000101 or Ferroxcube #56 590 65/3B)

D1, D2 — 1N4001

Q1, Q2 — MRF476
Q3, Q4 — MRF475

T1, T2 — 4:1 Impedance Transformer
T3 — 1:4 Impedance Transformer

MOTOROLA

Fig. 85-1

Circuit Notes

The amplifier provides a total power gain of about 25 dB, and the construction technique allows the use of inexpensive components throughout. The MRF476 is specified as a 3 watt device and the MRF475 has an output power of 12 watts. Both are extremely tolerant to overdrive and load mismatches, even under CW conditions. Typical IMD numbers are better than −35 dB, and the power gains are 18 dB and 12 dB, respectively, at 30 MHz. The bias currents of each stage are individually adjustable with R5 and R6. Capacitors C4 and C10 function as audio-frequency bypasses to further reduce the source impedance at the frequencies of modulation. Gain leveling across the band is achieved with simple RC networks in series with the bases, in conjunction with negative feedback. The amplitude of the out-of-phase voltages at the bases is inversely proportional to the frequency as a result of the series inductance in the feedback loop and the increasing input impedance of the transistor at low frequencies. Conversely, the negative feedback lowers the effective input impedance presented to the source (not the input impedance of the device itself) and with proper voltage slope would equalize it. With this technique, it is possible to maintain an input VSWR of 1.5:1 or less than 1.6 to 30 MHz.

1 WATT, 2.3 GHz AMPLIFIER

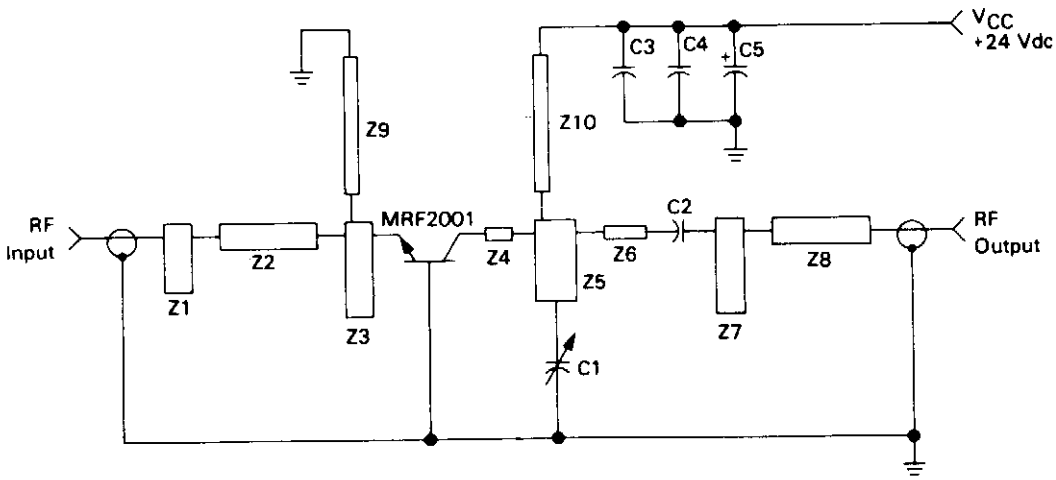

C1 — 0.4-2.5 pF Johanson 7285*
C2, C3 — 68 pF, 50 mil ATC**
C4 — 0.1 μF, 50 V
C5 — 4.7 μF, 50 V Tantalum

Z1-Z10 — Microstrip; see Photomaster, Figure 3

Board Material — 0.0625" 3M Glass Teflon,***
$\epsilon_r = 2.5 \pm 0.05$
*Johanson Manufacturing Corp., 400 Rockaway Valley Road, Boonton, NJ 07005
**American Technical Ceramics, One Norden Lane, Huntington Station, NY 11746
***Registered Trademark of Du Pont

MOTOROLA

Fig. 85-2

Circuit Notes

Simplicity and repeatability are featured in this 1 watt S-band amplifier design. The design uses an MRF2001 transistor as a common base, Class C amplifier. The amplifier delivers 1 watt output with 8 dB minimum gain at 24 V, and is tunable from 2.25 to 2.35 GHz. Applications include microwave communications equipment and other systems requiring medium power, narrow band amplification. The amplifier circuitry consists almost entirely of distributed microstrip elements. A total of six additional components, including the MRF2001, are required to build a working amplifier. The input and output impedances of the transistor are matched to 50 ohms by double section low pass networks. The networks are designed to provide about 3% 1 dB power bandwidth while maintaining a collector efficiency of approximately 30%. There is one tuning adjustment in the amplifier—C1 in the output network. Ceramic chip capacitors, C2 and C3, are used for dc blocking and power supply decoupling. Additional low frequency decoupling is provided by capacitors C4 and C5.

5-W RF POWER AMPLIFIER

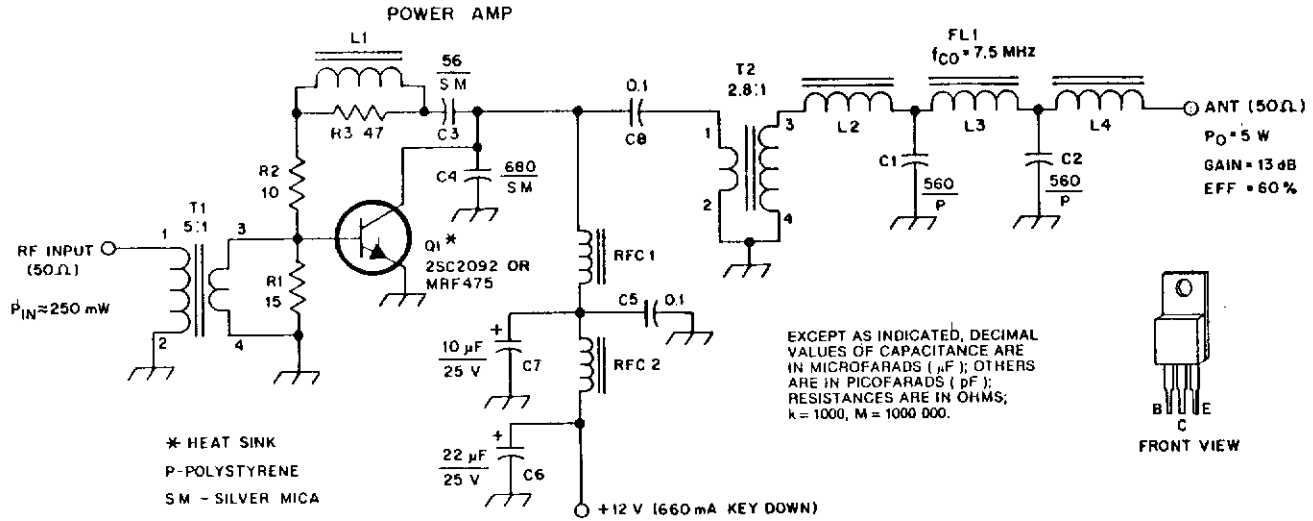

L1—0.22-μH inductor. Small RF choke or 8 turns of no. 24 enam wire on an Amidon T-37-6 toroid.

L2, L4—0.8-μH inductor. 12 turns of no. 24 enam wire on an Amidon T-50-2 toroid.

L3—1.67-μH inductor. 18 turns of no. 24 enam wire on an Amidon T-50-2 toroid.

RFC1—2.8 μH choke. 24 turns of no. 26 enam wire on an Amidon T-50-2 toroid.

RFC2—42 μH choke. 10 turns of no. 26 enam wire on an Amidon FT-37-43 toroid.

T1—Primary has 16 turns of no. 26 enam wire on an Amidon FT-37-43 toroid. Secondary has 6 turns of no. 26 enam wire.

T2—Primary (Q1 side) has 9 turns of no. 24 enam wire on an Amidon FT-50-43 toroid. Secondary has 15 turns of no. 24 enam wire.

QST

Fig. 85-3

Circuit Notes

Numbered components are so designated for PC-board layout purposes. C5 and C8 are disc ceramic. C6 and C7 are tantalum or electrolytic. R1, R2 and R3 are ½ W carbon composition resistors. Silver-mica capacitors may be substituted for polystyrene (P) types. Impedance transformation ratios are shown above T1 and T2.

6-METER PREAMPLIFIER PROVIDES 20 dB GAIN AND LOW NF

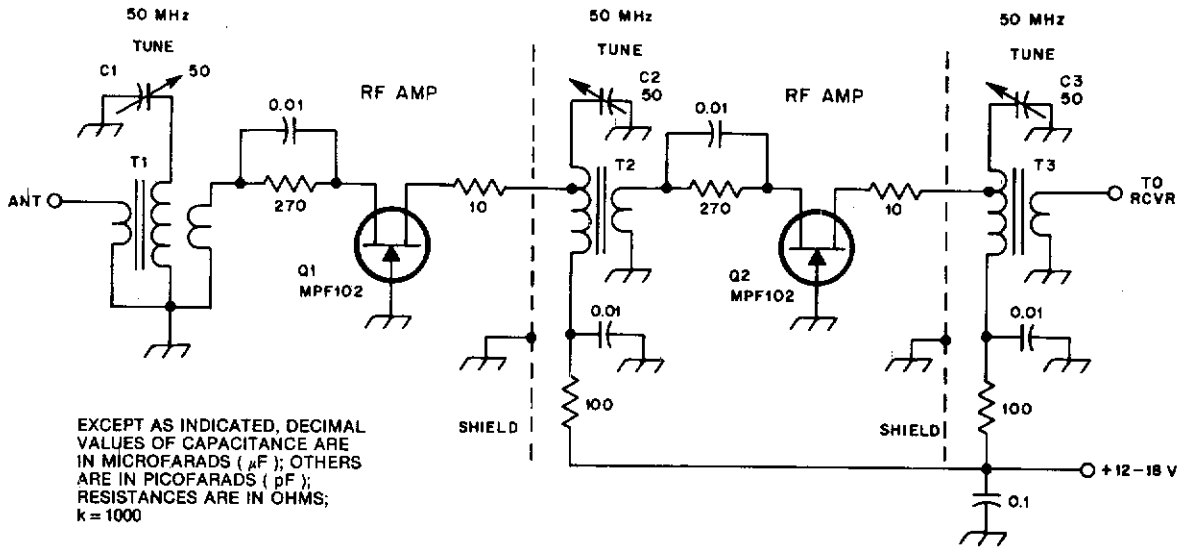

QST

Fig. 85-4

Circuit Notes

C1, C2, and C3 are miniature ceramic or plastic trimmers. T1 (main winding) is 0.34 μH. Use of 11 turns of no. 24 enameled wire on a T37-10 toroid core. The antenna winding has one turn, and Q1 the source winding has three turns. T2 primary consists of 11 turns of no. 24 enameled wire on a T37-10 toroid. Tap Q1 drain is three turns from C2 the end of the winding. The secondary has three turns. T3 is the same as T2, except its secondary has one turn.

125 WATT 150 MHz AMPLIFIER

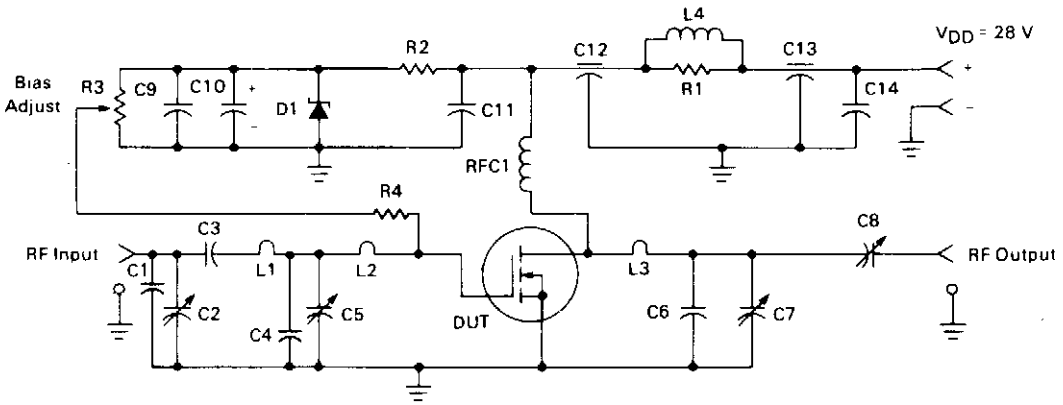

C1 — 35 pF Unleco
C2, C5 — Arco 462, 5-80 pF
C3 — 100 pF Unleco
C4 — 25 pF Unleco
C6 — 40 pF Unleco
C7 — Arco 461, 2.7-30 pF
C8 — Arco 463, 9-180 pF
C9, C11, C14 — 0.1 μF Erie Redcap
C10 — 50 μF, 50 V
C12, C13 — 680 pF Feedthru
D1 — 1N5925A Motorola Zener

L1 — #16 AWG, 1-1/4 Turns, 0.213" ID
L2 — #16 AWG, Hairpin 0.25" × 0.062"
L3 — #14 AWG, Hairpin 0.47" × 0.2"
L4 — 10 Turns #16 AWG Enameled Wire on R1
RFC1 — 18 Turns #16 AWG Enameled Wire, 0.3" ID
R1 — 10 Ω, 2.0 W
R2 — 1.8 kΩ, 1/2 W
R3 — 10 kΩ, 10 Turn Bourns
R4 — 10 kΩ, 1/4 W

MOTOROLA

Fig. 85-5

Circuit Notes

This amplifier operates from a 28 Vdc supply. It has a typical gain of 12 dB, and can survive operation into a 30:1 VSWR load at any phase angle with no damage. The amplifier has an AGC range in excess of 20 dB. This means that with input power held constant at the level that provides 125 watts output, the output power may be reduced to less than 1.0 watt continuously by driving the dc gate voltage negative from its I_{DQ} value.

6-METER KILOWATT AMPLIFIER

Circuit Notes

The amplifier uses a grounded grid circuit with either the Eimac 3CX1000A7 or 8877, ceramic/metal triodes intended for linear service in the HF and VHF ranges. The amp provides the legal power output of 1500 watts PEP and CW service with no effort and requires a driver delivering between 50 and 80 watts at 50 MHz. With a plate voltage of 3000 volts at 0.8 amps the amplifier performs at 60 percent efficiency. The grid is grounded by means of the grid ring of the 3CX1000A7 socket providing a low-inductance path to ground. The amplifier is completely stable.

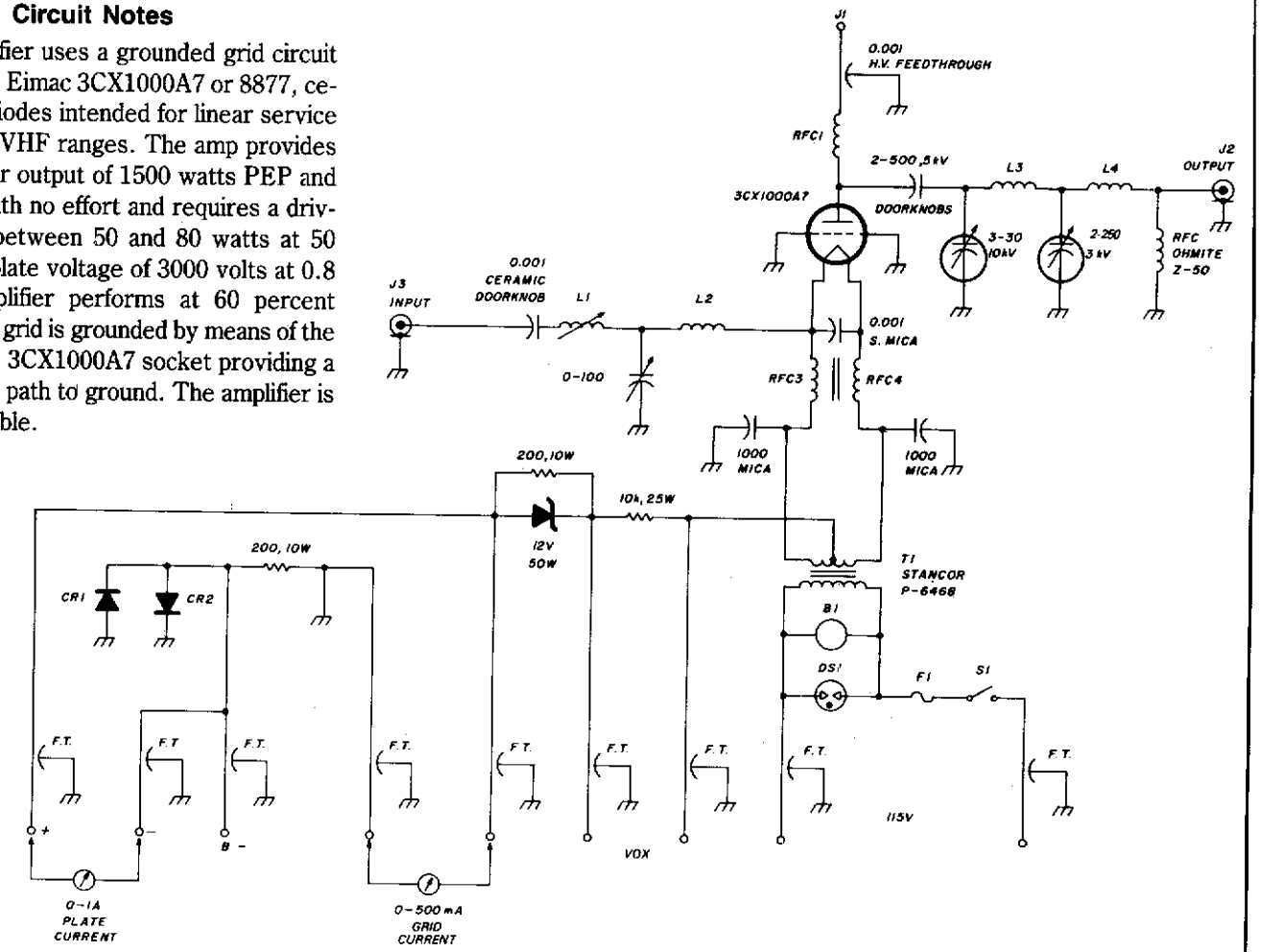

Fig. 85-6

BROADCAST-BAND RF AMPLIFIER

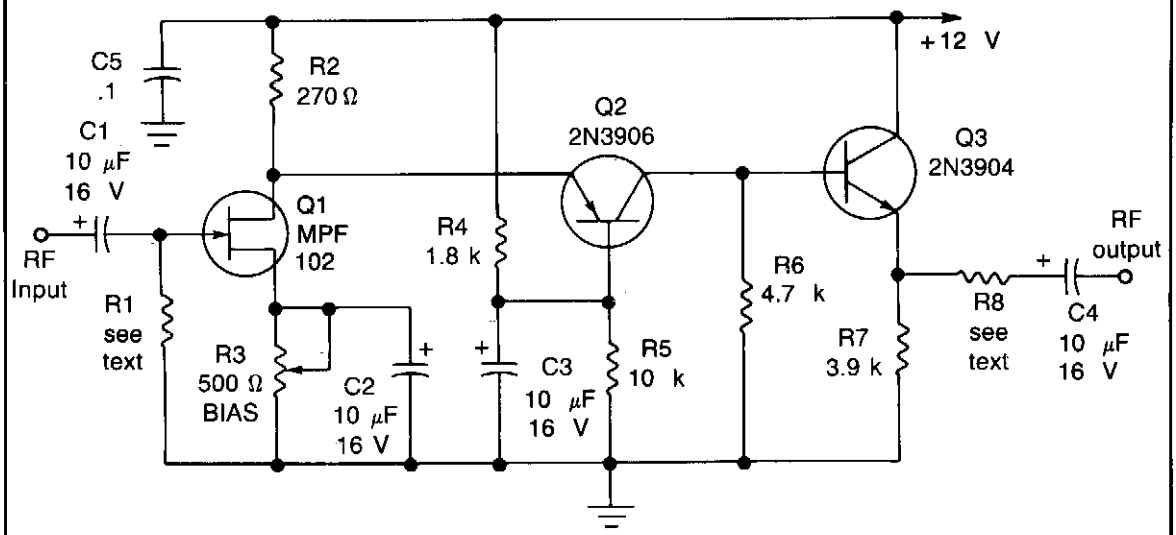

RADIO-ELECTRONICS

Fig. 85-7

Circuit Notes

The circuit has a frequency response ranging from 100 Hz to 3 MHz; gain is about 30 dB. Field-effect transistor Q1 is configured in the common-source self-biased mode; optional resistor R1 sets the input impedance to any desired value. Commonly, it will be 50 ohms. The signal is then direct-coupled to Q2, a common-base circuit that isolates the input and output stages and provides the amplifier's exceptional stability. Q3 functions as an emitter follower, to provide low output impedance (about 50 ohms). For higher output impedance, include resistor R8. It will affect impedance according to this formula: R8 ~ $R_{out} - 50$. Otherwise, connect output capacitor C4 directly to the emitter of Q3.

IMPROVED RF ISOLATION AMPLIFIER

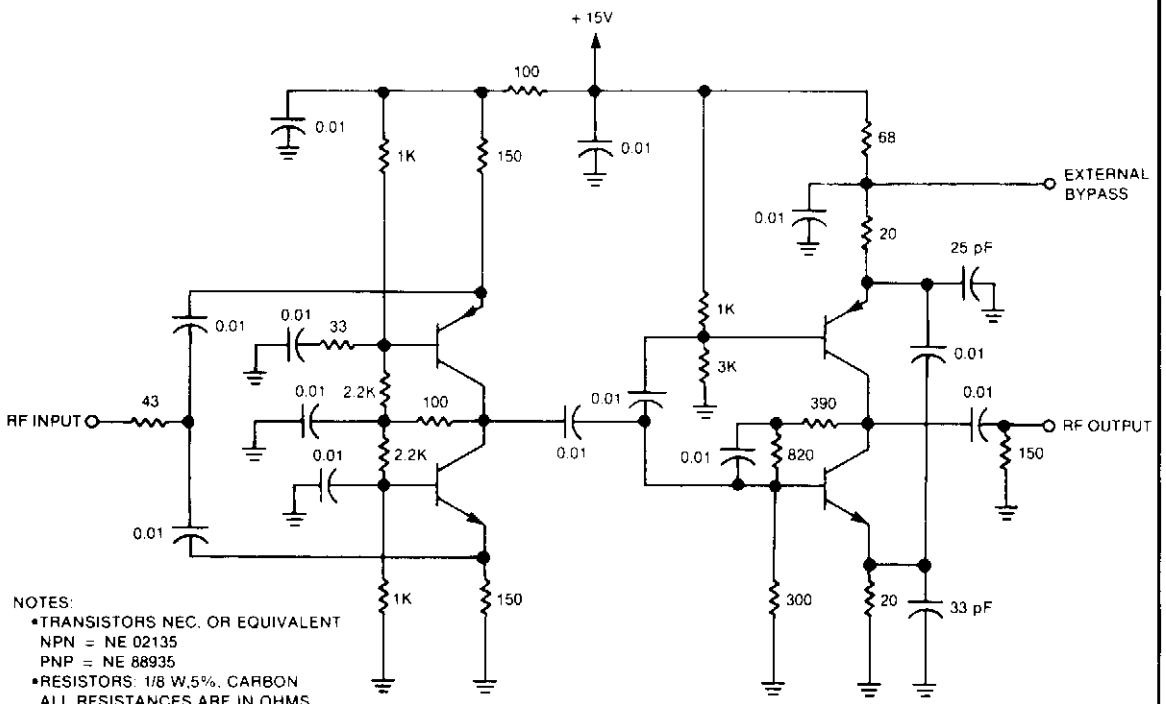

NASA

Fig. 85-8

Circuit Notes

This wideband RF isolation amplifier has a frequency response of 0.5 to 400 MHz ± 0.5 dB. This two stage amplifier can be used in applications requiring high reverse isolation, such as receiver intermediate-frequency (IF) strips and frequency distribution systems. Both stages use complementary-symmetry transistor arrangements. The input stage is a common-base connection for the complementary circuit. The output stage, which supplies the positive gain, is a common-emitter circuit using emitter degeneration and collector-base feedback for impedance control.

A 10 WATT 225-400 MHz AMPLIFIER

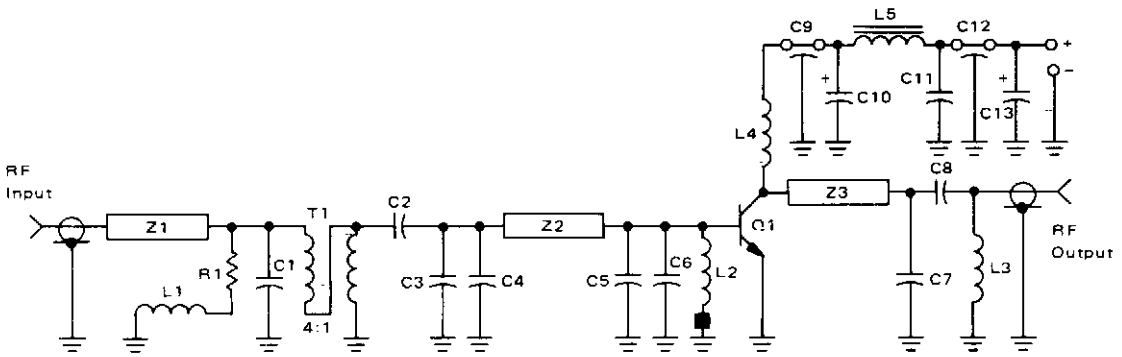

C1 – 8.2 pF Chip*
C2 – 270 pF Chip*
C3 – 36 pF Chip*
C4, C7 – 15 pF Chip*
C5, C6 – 50 pF Chip*
C8 – 82 pF Chip*
C9, C12 – 680 pF Feedthru
C10, C13 – 1.0 μF 50 V Tantalum
C11 – 0.1 μF Erie Redcap

L1, L3 – 3 Turns #22 AWG 1/8" (3.175 mm) ID
L2 – 0.15 μH Molded Choke
L4 – 0.15 μH Molded Choke with Ferroxcube Bead (Ferroxcube 56-590-65/4B on Ground End of Choke)
L5 – Ferroxcube VK200-19/4B

*100 mil A.C.I. Chip Capacitors

R1 – 36 Ω 1/4 Watt

T1 – 25 Ω Subminiature Coax (Type UT34-25) – 1.75 inches (44.45 mm) long

Z1 – Microstrip Line
720 mils L X 162 mils W
18.29 mm L X 4.115 mm W

Z2 – Microstrip Line
680 mils L X 162 mils W
17.27 mm L X 4.115 mm W

Z3 – Microstrip Line
2200 mils L X 50 mils W
55.88 mm L X 1.27 mm W

Board – 0.0625" (1.588 mm) Glass Teflon, $\epsilon_r = 2.56$

Q1 – MRF331

MOTOROLA

Fig. 85-9

SCHEMATIC REPRESENTATION

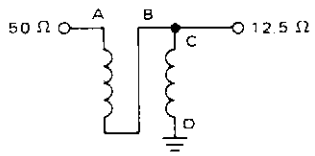

ASSEMBLY AND PICTORIAL

Transformer Dimensions (not to scale)

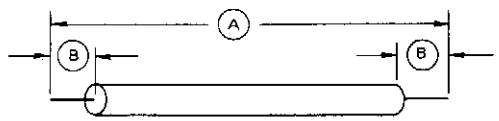

(A) – 1.75 inches (4.445 cm)

(B) – 0.1875 inch (0.476 cm)

A 10 WATT 225-400 MHz AMPLIFIER, Continued.

Transformer Connections

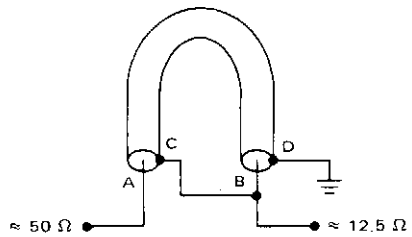

Circuit Notes

This broadband amplifier covers the 225-400 MHz military communications band producing 10 watt RF output power and operating from a 28 volt supply. The amplifier can be used as a driver for higher power devices such as 2N6439 and MRF327. The circuit is designed to be driven by a 50 ohm source and operate into a nominal 50 ohm load. The input matching network consists of a section composed of C3, C4, Z2, C5 and C6. C2 is a dc blocking capacitor, and T1 is a 4:1 impedance ratio coaxial transformer. Z1 is a 50 ohm transmission line. A compensation network consisting of R1, C1, and L1 is used to improve the input VSWR and flatten the gain response of the amplifier. L2 and a small ferrite bead make up the base bias choke. The output network is made up of a microstrip L-section consisting of Z3 and C7, and a high pass section consisting of C8 and L3. C8 also serves as a dc blocking capacitor. Collector decoupling is accomplished through the use of L4, L5, C9, C10, C11, C12, and C13.

86

RF Oscillators

The sources of the following circuits are contained in the Sources section beginning on page 694. The figure number contained in the box of each circuit correlates to the source entry in the Sources section.

5 MHz VFO

5 MHz VFO

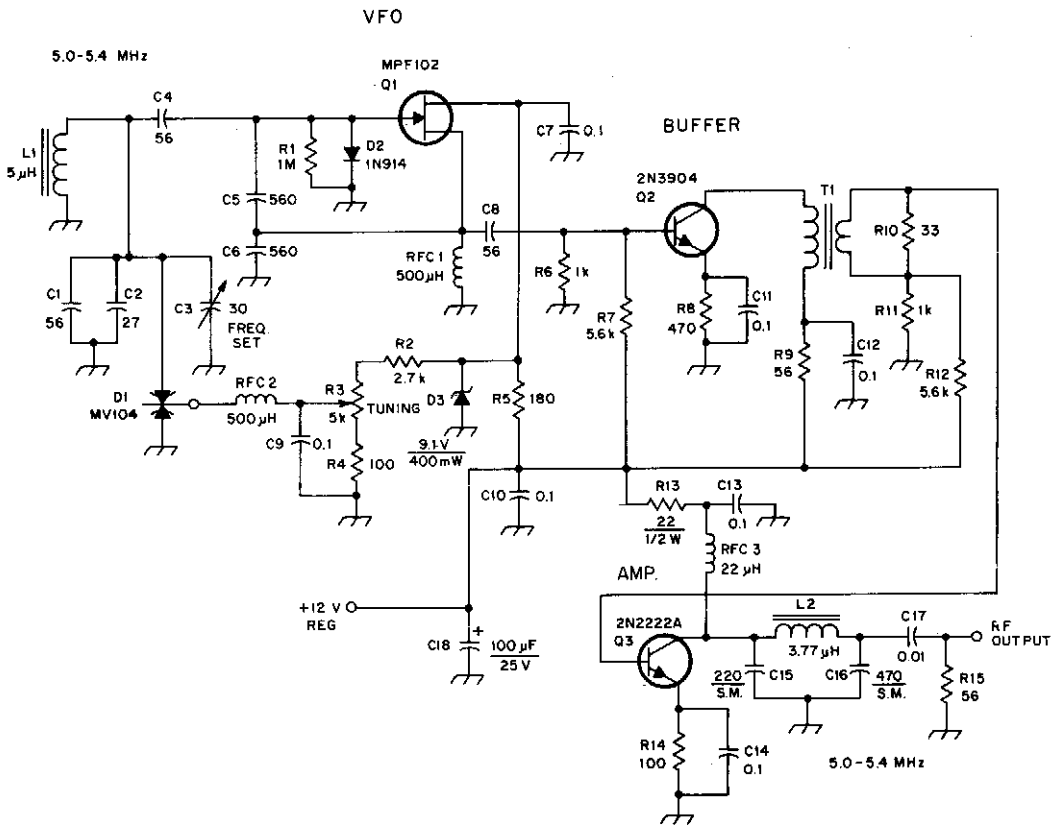

QST

Fig. 86-1

Circuit Notes

A JFET (Q1) serves as the oscillator. D2 helps to stabilize the transistor by limiting positive sinewave peaks and stabilizing the bias. Output from Q1 is supplied to a class A buffer, Q2. It operates as a broadband amplifier by means of T1, which is untuned. Output amplifier Q3 is also a class A stage. A low-pass, single-section filter is used at the output of Q3 to remove some of the harmonic currents generated within the system. The filter output impedance is 50 ohms. The injection level to the mixer is 600 mV p-p.

87

Sample-and-Hold Circuits

The sources of the following circuits are contained in the Sources section beginning on page 694. The figure number contained in the box of each circuit correlates to the source entry in the Sources section.

Sample-and-Hold Circuit
Sample and Hold Circuit II
Fast, Precision Sample-Hold
High Performance Sample and Hold
Infinite Sample and Hold Amplifier
Charge Compensated Sample and Hold

SAMPLE-AND-HOLD CIRCUIT

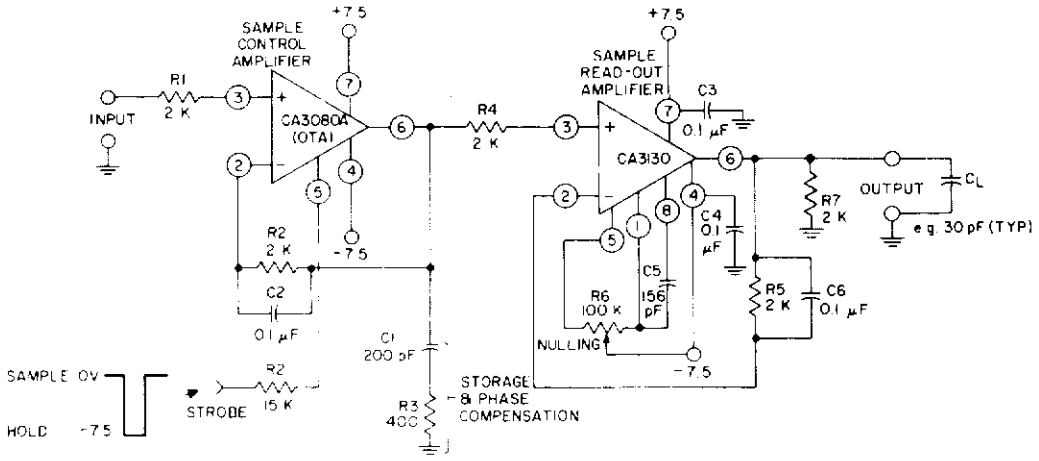

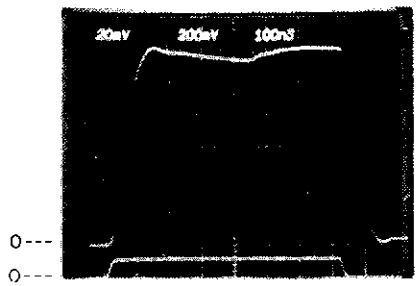

TOP TRACE: OUTPUT — 20 mV/DIV. & 100 ns/DIV.
BOTTOM TRACE: INPUT—200 mV/DIV. & 100 ns/DIV.

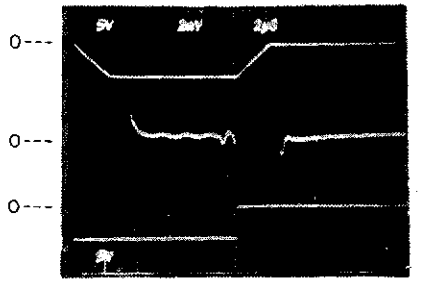

TOP TRACE: OUTPUT—5 V/DIV. & 2 μs/DIV.
CENTER TRACE: DIFFERENTIAL COMPARISON OF INPUT & OUTPUT—2 mV/DIV. & 2 μs/DIV.
BOTTOM TRACE: INPUT—5 V/DIV. & 2 μs/DIV.

GENERAL ELECTRIC /RCA *Fig. 87-1*

Circuit Notes

The circuit uses a CA3130 BiMOS op amp as the sample-readout amplifier for the storage (sample-holding) capacitor C1, and a CA3080A as the sample-control amplifier. Applications in linear systems to temporarily store analog data include DVM systems, industrial process-control, multiplex systems, and A-D converters.

SAMPLE AND HOLD CIRCUIT II

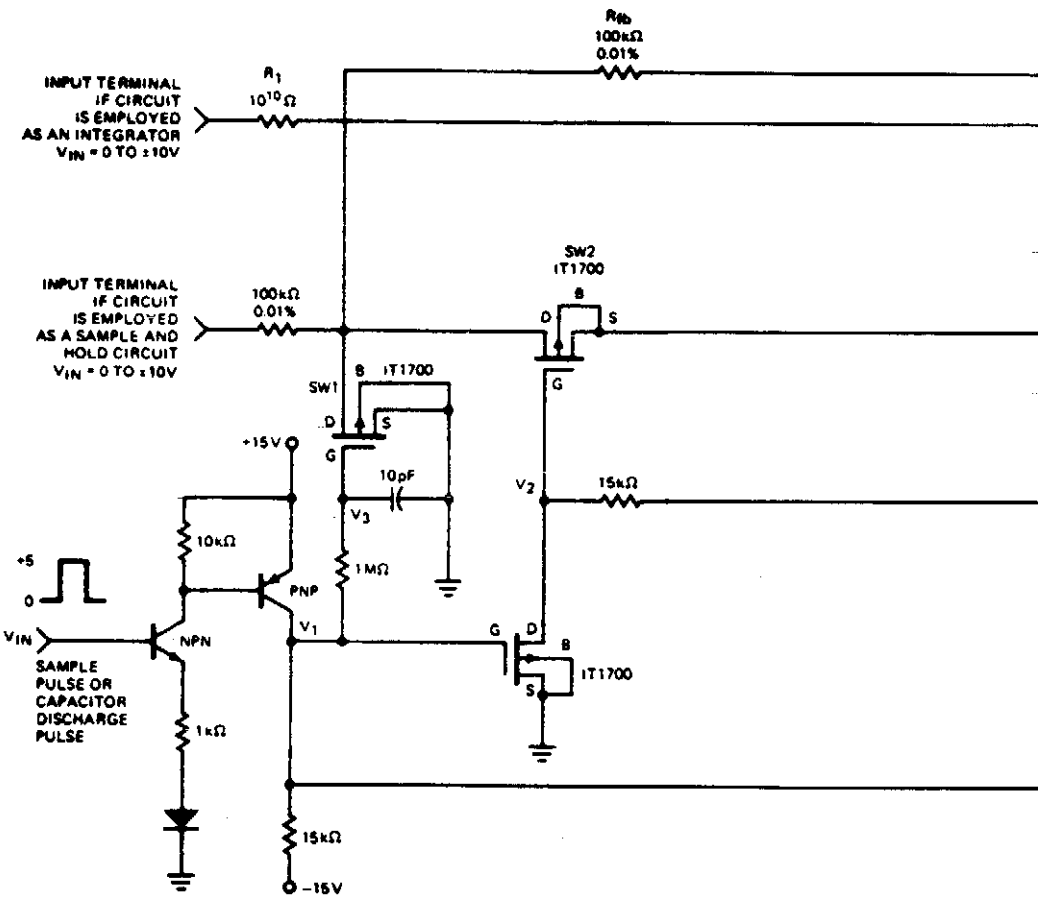

Fig. 87-2

Circuit Notes

This circuit rapidly charges capacitor C_{STO} to a voltage equal to an input signal. The input signal is then electrically disconnected from the capacitor with the charge still remaining on C_{STO}. Since C_{STO} is in the negative feedback loop of the operational amplifier, the output voltage of the amplifier is equal to the voltage across the capacitor. Ideally, the voltage across C_{STO} should remain constant causing the output of the amplifier to remain constant as well. However, the voltage across C_{STO} will decay at a rate proportional to the current being injected or taken out of the current summing node of the amplifier. This current can come from four sources: leakage resistance of

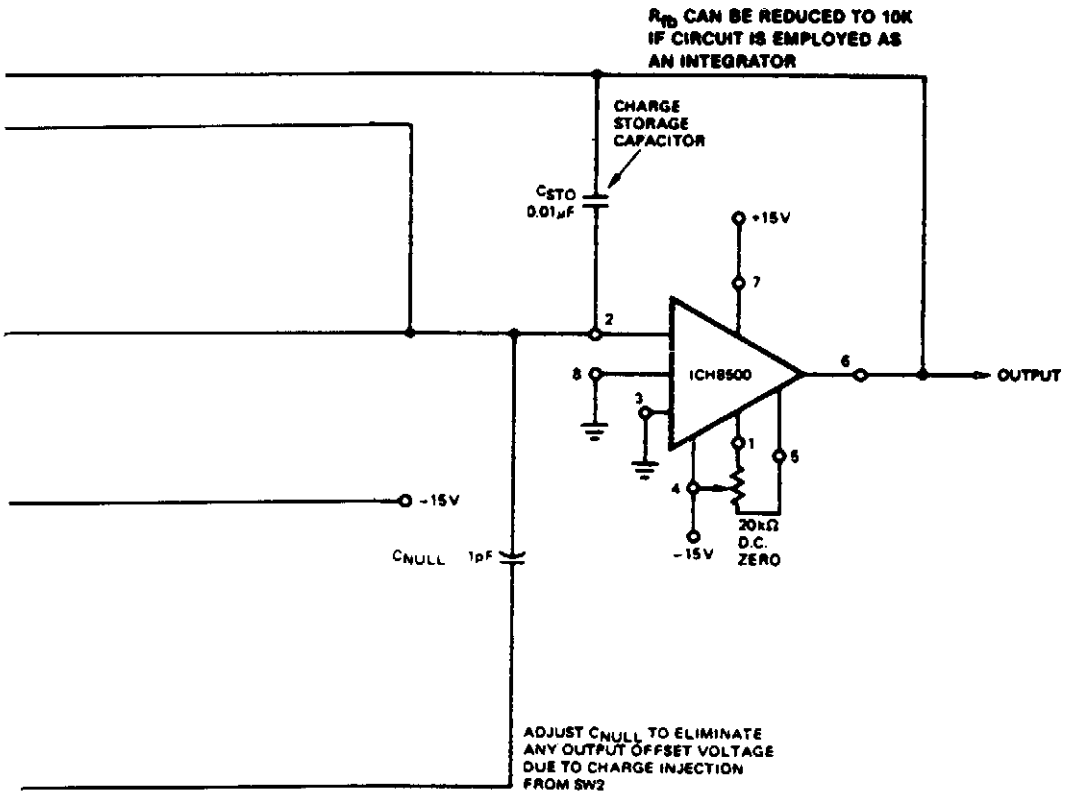

C_{STO}, leakage current due to the solid state switch SW2, currents due to high resistance paths on the circuit fixture, and most important, bias current of the operational amplifier. If the ICH8500A operational amplifier is employed, this bias current is almost non-existent (less than 0.01pA). Note that the voltages on the source, drain and gate of switch SW2 are zero or near zero when the circuit is in the hold mode. Careful construction will eliminate stray resistance paths and capacitor resistance can be eliminated if a quality capacitor is selected. The net result is a low drift sample and hold circuit.

The circuit can double as an integrator. In this application the input voltage is applied to the integrator input terminal. The time constant of the circuit is the product of R1 and C_{STO}.

FAST, PRECISION SAMPLE-HOLD

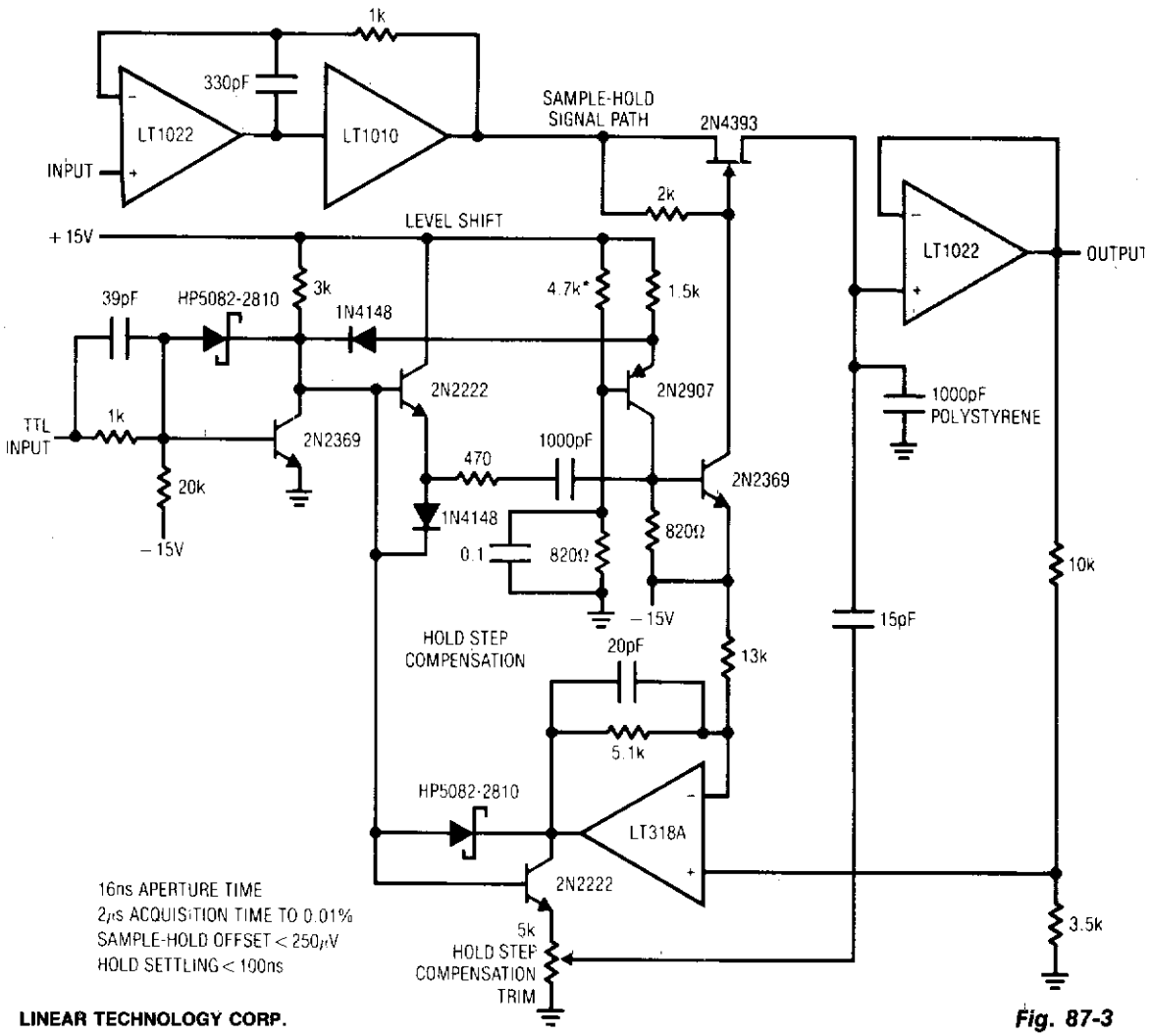

LINEAR TECHNOLOGY CORP.

Fig. 87-3

HIGH PERFORMANCE SAMPLE AND HOLD

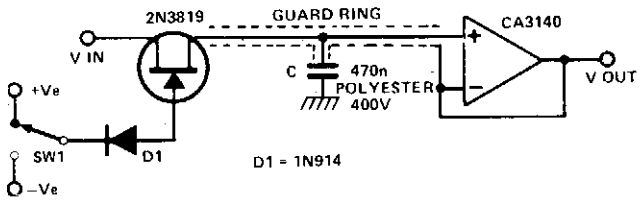

PRINTED CIRCUIT BOARD LAYOUT

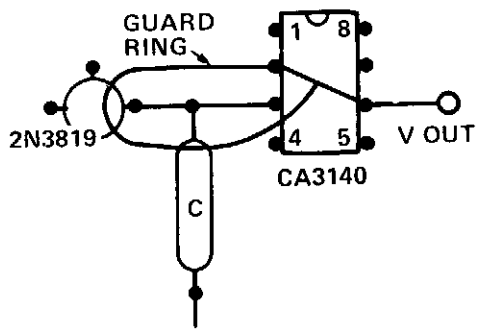

ELECTRONICS TODAY INTERNATIONAL

Fig. 87-4

Circuit Notes

When switch SW1 is positive, the FET is turned on, and has a resistance of about 400 ohm. The input voltage charges up the capacitor through the FET. When SW1 is negative, the FET is turned off (pinched off). To get a long storage time, the op amp must have a very low input bias current. For the CA3140, this current is about 10 pico amps. The rate at which the capacitor will be discharged by this current is based on the equation, C (dv/dt) = i where dv/dt is the rate of change of voltage on the capacitor. Therefore:

$$\frac{dv}{dt} = \frac{i}{C} = \frac{10^{-11}}{0.47 \times 10^{-6}} = 22\mu V/s$$

INFINITE SAMPLE AND HOLD AMPLIFIER

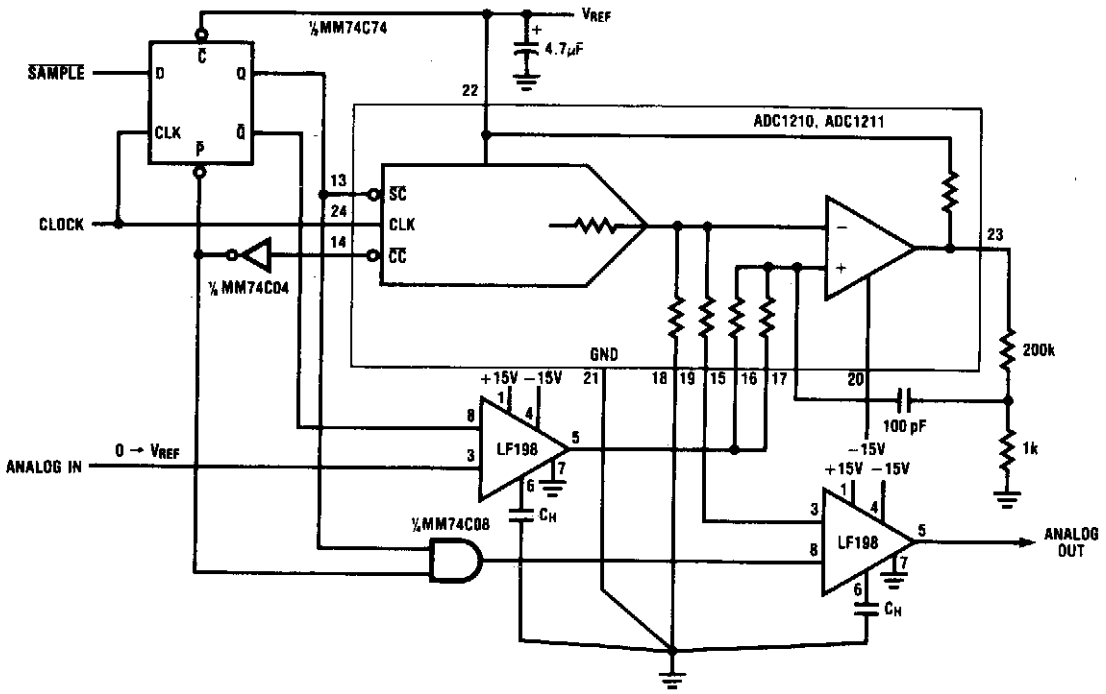

NATIONAL SEMICONDUCTOR CORP.

Fig. 87-5

Circuit Notes

During normal "hold" mode, the replicated analog voltage is buffered straight through the S/H amplifier to the output. Upon issuance of a $\overline{\text{SAMPLE}}$ signal, the S/H amplifier is placed in the hold mode, holding the voltage until the new analog voltage is valid. The same $\overline{\text{SAMPLE}}$ signal triggers an update to the input sample-and-hold amplifier. The most current analog voltage is captured and held for conversion. The previously determined voltage is held stable at the output during the conversion cycle while the SAR/D-to-A converter continuously adjusts to replicate the new input voltage. At the end of the conversion, the output sample-and-hold amplifier is once again placed in the track mode. The new analog voltage is then regenerated.

CHARGE COMPENSATED SAMPLE AND HOLD

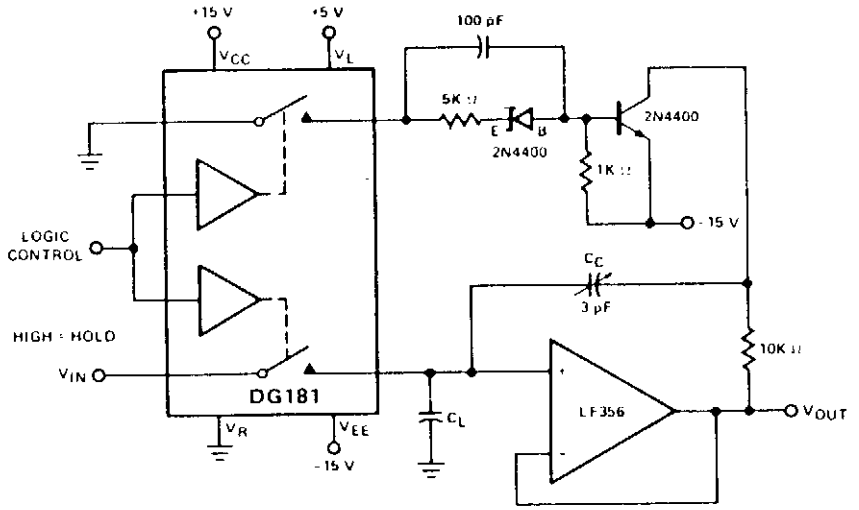

(< 5 mV of Sample to Hold Offset when C_L = 1000 pF)

SILICONIX

Fig. 87-6

Circuit Notes

Less than ±5 pC charge transfer (less than 5 mV sample-to-hold offset when C_L = 1000 pF).

88

Sine-Wave Oscillators

The sources of the following circuits are contained in the Sources section beginning on page 694. The figure number contained in the box of each circuit correlates to the source entry in the Sources section.

Sine-Wave Shaper
Low Distortion Sine-Wave Oscillator
Audio Oscillator
Simple Audio Sine-Wave Generator
Low Cost Wien Bridge Oscillator
Modified UJT Relaxation Oscillator Produces Clean Audio Sinusoids
A 555 Used as an RC Audio Oscillator
Wien Bridge Oscillator Uses CMOS Chip
Adjustable Sine-wave Audio Oscillator
One-IC Audio Generator
Simple Two-Tone Generator

SINE-WAVE SHAPER

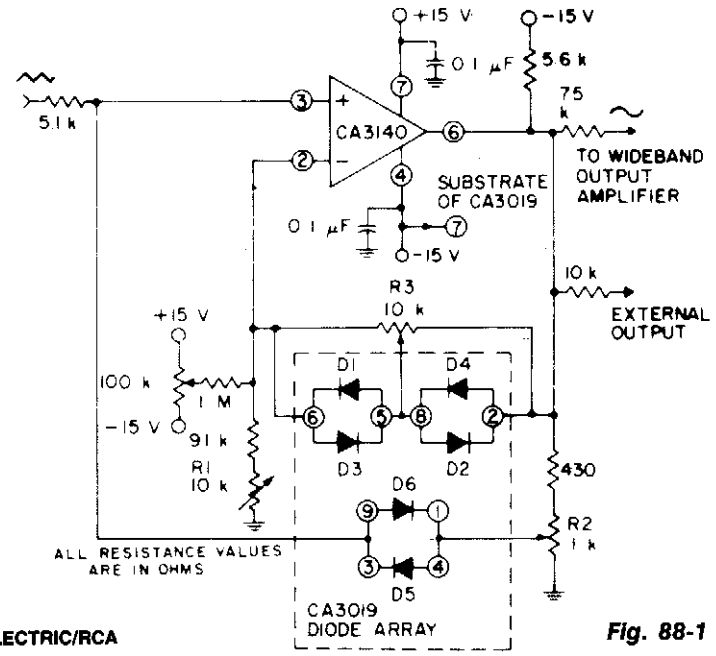

GENERAL ELECTRIC/RCA

Fig. 88-1

Circuit Notes

Uses a CA3140 BiMOS op amp as voltage follower, together with diodes from a CA3019 array, to convert a triangular signal (such as obtained from a function generator) to a sine-wave output with typical THD less than 2%.

LOW DISTORTION SINE-WAVE OSCILLATOR

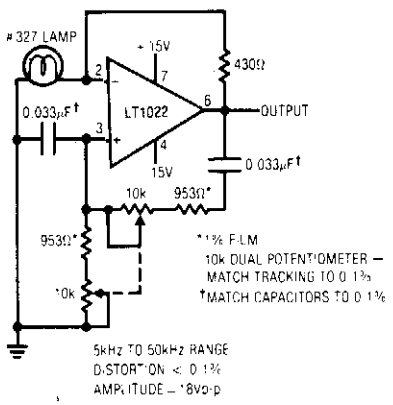

LINEAR TECHNOLOGY CORP.

Fig. 88-2

AUDIO OSCILLATOR

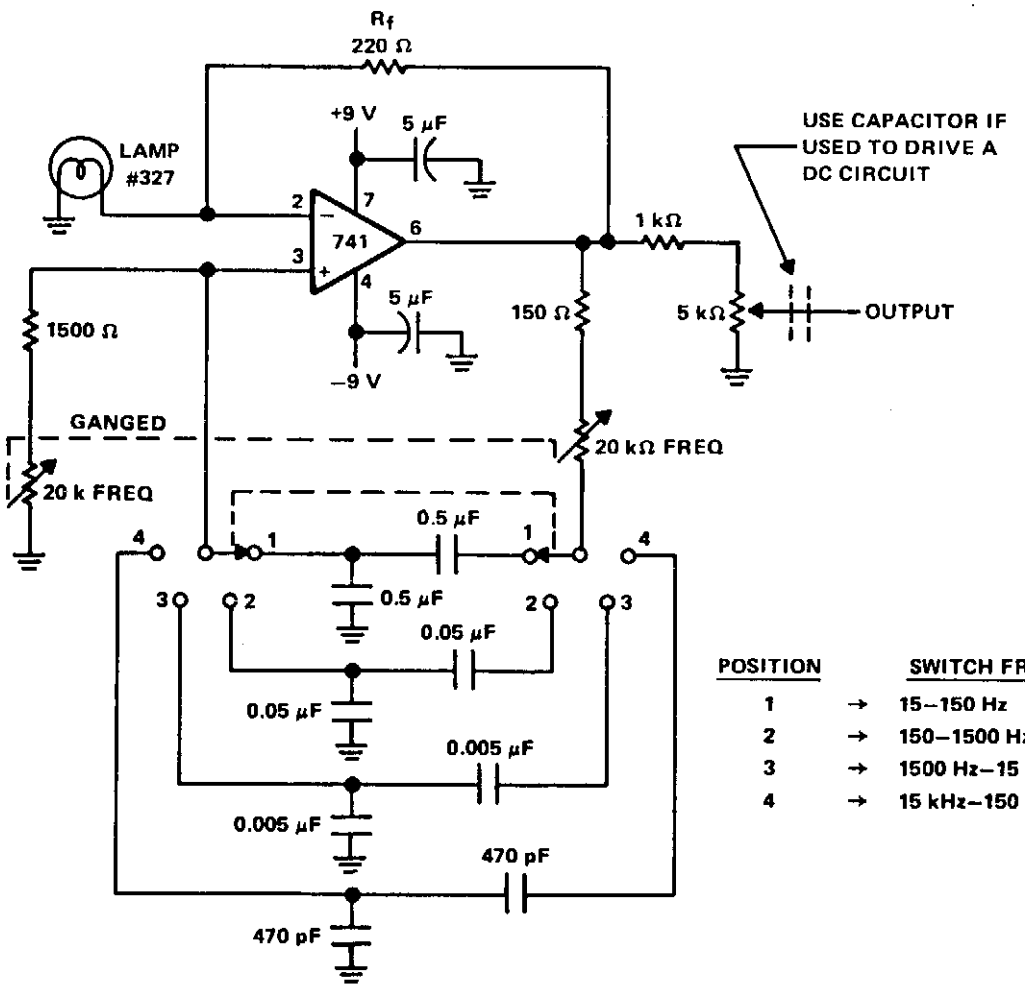

POSITION		SWITCH FREQ
1	→	15–150 Hz
2	→	150–1500 Hz
3	→	1500 Hz–15 kHz
4	→	15 kHz–150 kHz

TEXAS INSTRUMENTS

Fig. 88-3

Circuit Notes

A Wien bridge oscillator produces sine waves with very low distortion level. The Wien bridge oscillator produces zero phase shift at only one frequency ($f = \frac{1}{2} \pi RC$) which will be the oscillation frequency. Stable oscillation can occur only if the loop gain remains at unity at the oscillation frequency. The circuit achieves this control by using the positive temperature coefficient of a small lamp to regulate gain (R_f/R_{LAMP}) as the oscillator attempts to vary its output. The oscillator shown here has four frequency bands covering about 15 Hz to 150 kHz. The frequency is continuously variable within each frequency range with ganged 20 k ohm potentiometers. The oscillator draws only about 4.0 mA from the 9-V batteries. Its output is from 4 to 5 V with a 10 k ohm load and the R_f (feedback resistor) is set at about 5% below the point of clipping. As shown, the center arm of the 5 k ohm output potentiometer is the output terminal. To couple the oscillator to a dc type circuit, a capacitor should be inserted in series with the output lead.

SIMPLE AUDIO SINE-WAVE GENERATOR

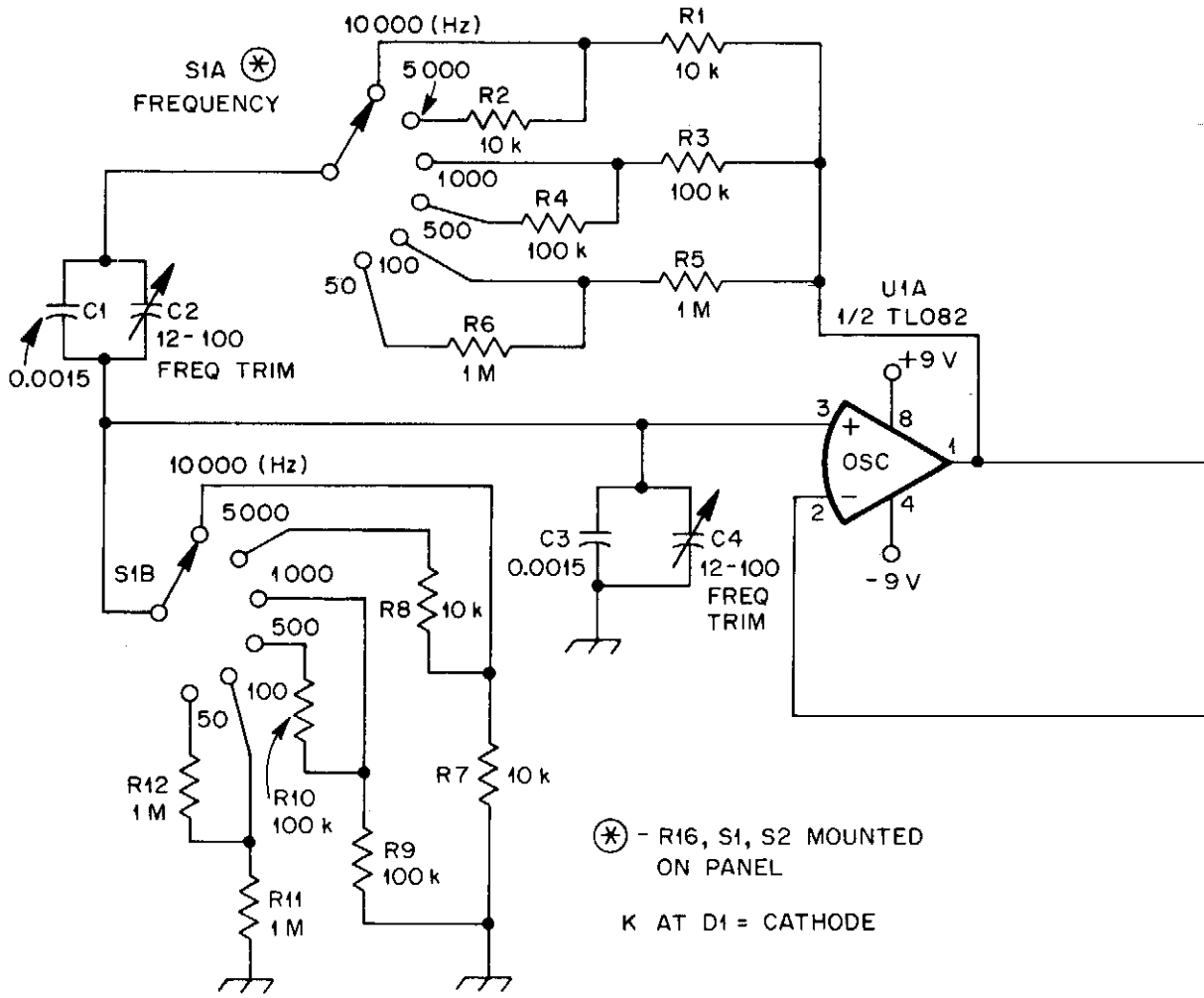

QST

Fig. 88-4

Circuit Notes

U1A, an op amp, oscillates at the frequency at which the phase shift in the Wien bridge network is exactly zero degrees. Changing bridge component values changes the oscillator frequency. In this circuit, we need change only the two resistors to do this. S1A chooses a value among R1 through R6, and S1B similarly selects a value from R7 through R12. U1A must provide enough gain to overcome losses in the bridge, but not so much gain that oscillation builds up to the point of overload and distortion. U2 and

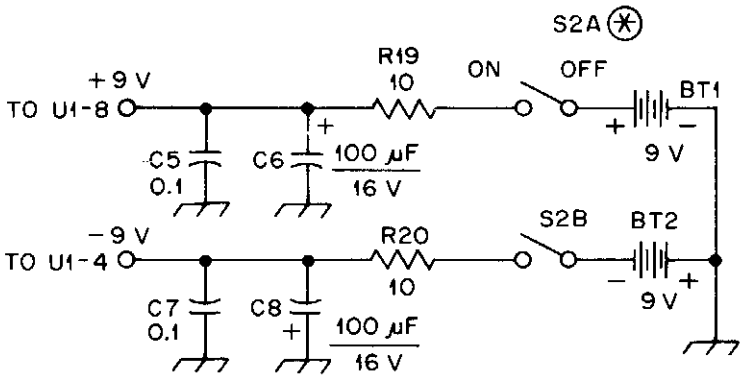

EXCEPT AS INDICATED, DECIMAL VALUES OF CAPACITANCE ARE IN MICROFARADS (µF); OTHERS ARE IN PICOFARADS (pF); RESISTANCES ARE IN OHMS; k = 1000, M = 1000 000.

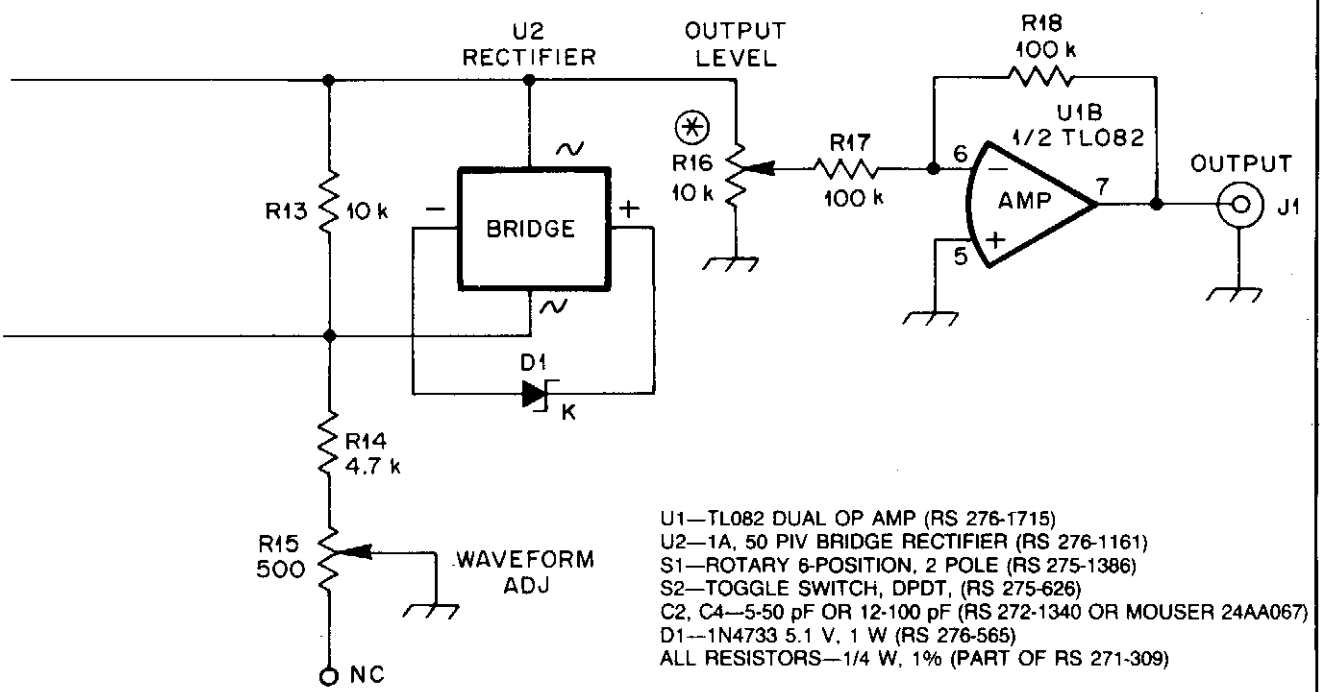

U1—TL082 DUAL OP AMP (RS 276-1715)
U2—1A, 50 PIV BRIDGE RECTIFIER (RS 276-1161)
S1—ROTARY 6-POSITION, 2 POLE (RS 275-1386)
S2—TOGGLE SWITCH, DPDT, (RS 275-626)
C2, C4—5-50 pF OR 12-100 pF (RS 272-1340 OR MOUSER 24AA067)
D1—1N4733 5.1 V, 1 W (RS 276-565)
ALL RESISTORS—1/4 W, 1% (PART OF RS 271-309)

C1 automatically regulate circuit gain to maintain oscillation. U2 places D1 across R13 with the proper polarity on both positive and negative alterations of the signal at pin 1 of U1. As the voltage at pin 1 of U1 approaches its peak value, D1 enters its Zener breakdown region, effectively shunting R13 with a resistive load. This increases the amount of negative feedback around U1, reducing its gain. R15, WAVEFORM ADJ, allows you to optimize circuit operation for lowest distortion. U1B provides isolation between oscillator and load. With the values shown for R17 and R18, U1B operates at unity gain.

LOW COST WIEN BRIDGE OSCILLATOR

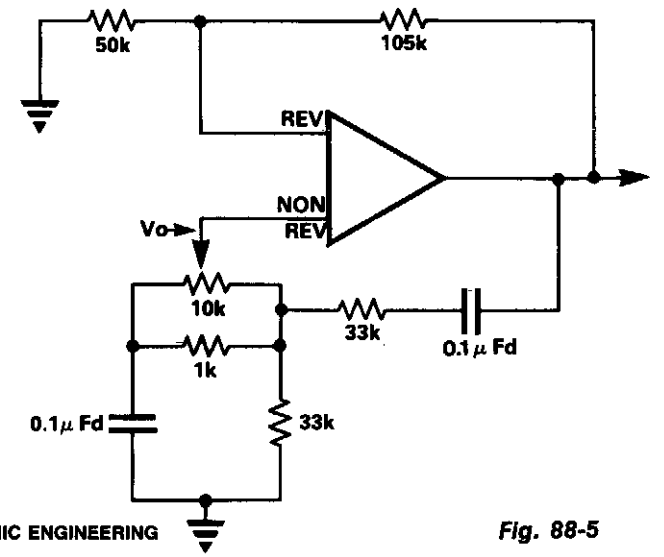

ELECTRONIC ENGINEERING

Fig. 88-5

Circuit Notes

In the circuit the frequency trimming component is arranged so that the voltage across it is in quadrature with the voltage V_0 from the bridge so that as it is adjusted the attenuation of the bridge only changes a little, avoiding the need for a two gang component. The range of variation of frequency is very limited. By using a high gain amplifier and metal film feedback resistors the loop gain can be set so that the unit just oscillates and the use of an automatic gain setting component, a thermistor for example, is eliminated.

MODIFIED UJT RELAXATION OSCILLATOR PRODUCES CLEAN AUDIO SINUSOIDS

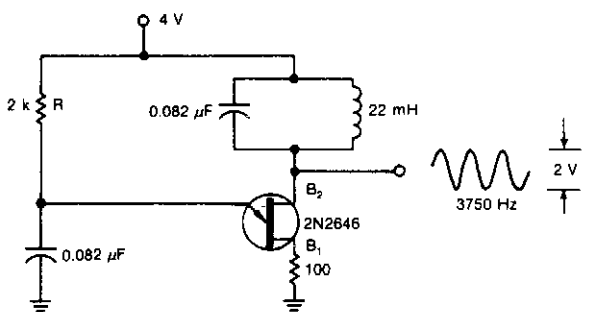

ELECTRONIC DESIGN

Fig. 88-6

Circuit Notes

By placing a tuned circuit in the UJT oscillator's current-pulse path, a 3750-Hz sinusoid can be created at B2 with the component values shown.

A 555 USED AS AN RC AUDIO OSCILLATOR

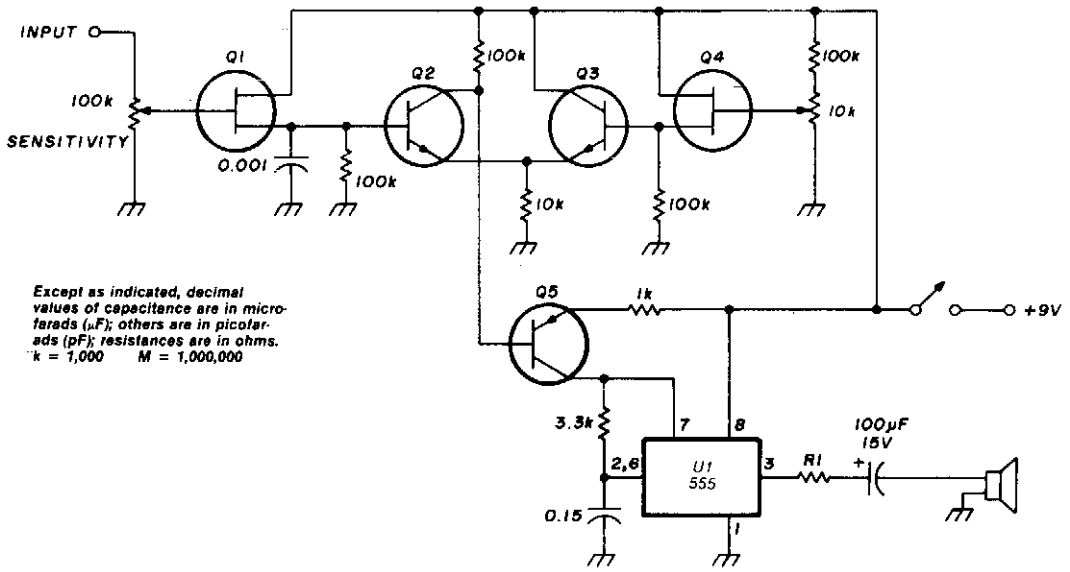

HAM RADIO

Fig. 88-7

Circuit Notes

Transistor Q5 and the 1000 ohm resistor form the variable element needed for controlling the frequency of VCO by limiting the charging current flowing into the 0.15 μF timing capacitor according to the forward bias being applied to Q5. As the voltage on pins 2 and 6 of U1 reach $\frac{2}{3}$ V_{CC} (about 6 volts with a 9-volt supply) the timer will fire and pin 3 will be pulled low. Pin 7, an open collector output, goes low and begins to discharge the timing capacitor—through the 3.3 kilohm resistor. The discharge time provided by this resistor assures a reasonable, although asymmetrical, waveform for the aural signal generated by U1. At $\frac{1}{3}$ V_{CC} the internal flip-flop resets, the output on pin 3 goes high, the open collector output on pin 7 floats, and the timing cycle begins again.

WIEN BRIDGE OSCILLATOR USES CMOS CHIP

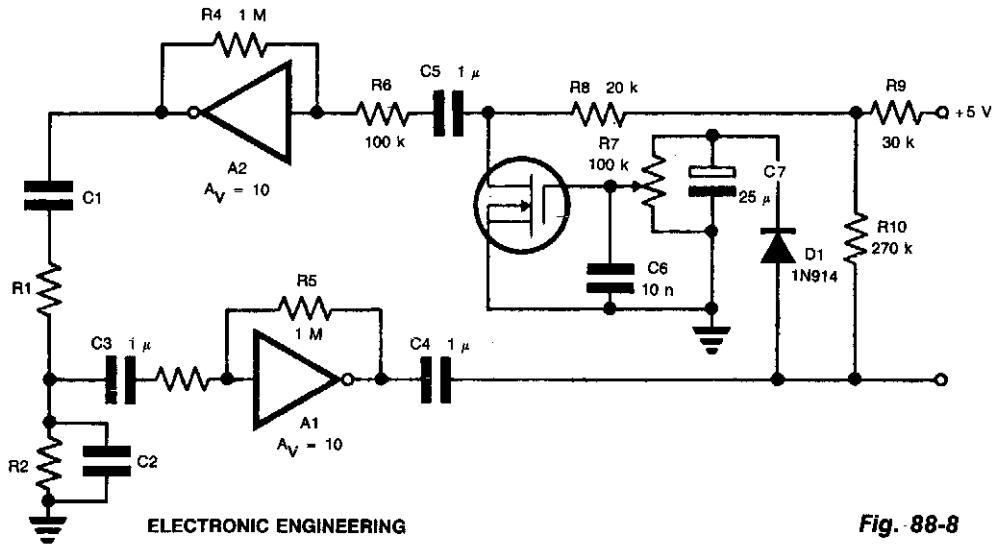

ELECTRONIC ENGINEERING

Fig. 88-8

ADJUSTABLE SINE-WAVE AUDIO OSCILLATOR

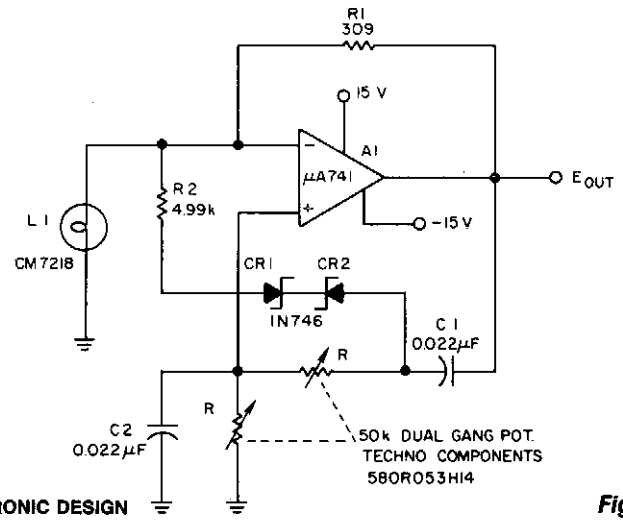

ELECTRONIC DESIGN

Fig. 88-9

Circuit Notes

Waveform purity at low frequencies for a Wien bridge oscillator is enhanced by diode limiting. Lamp L1 stabilizes the loop gain at higher frequencies while the limiting action of R2, CR1, and CR2 prevents clipping at low frequencies and increases the frequency adjustment range from about 3:1 to greater than 10:1.

ONE-IC AUDIO GENERATOR

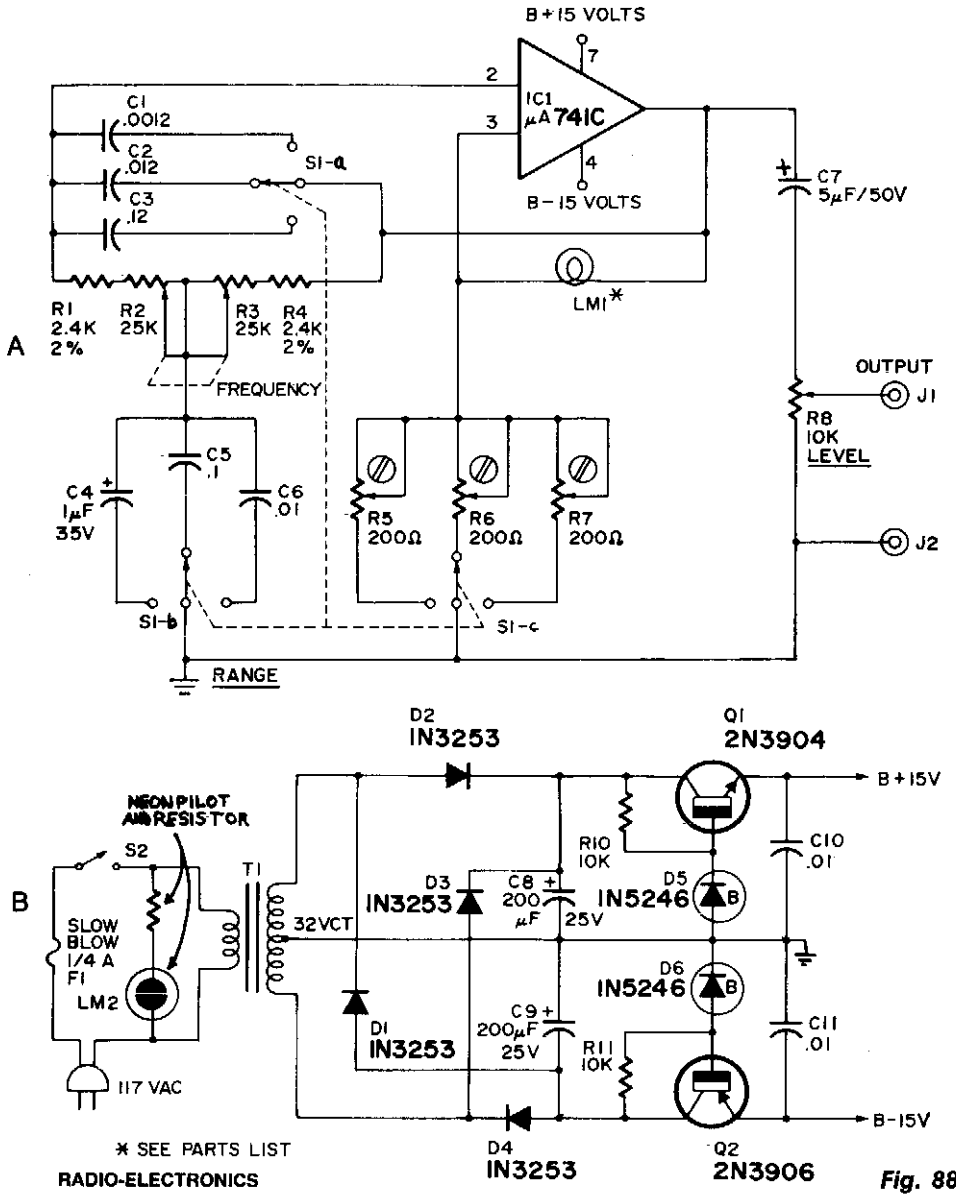

RADIO-ELECTRONICS

Fig. 88-10

Circuit Notes

This high-quality low-cost generator covers 20 Hz to 20 kHz in three bands with less than 1% distortion. LM1—10 V, 14 mA (344, 1869, 914) or 10 V, 10 mA (913, 367).

A = oscillator
B = power supply

SIMPLE TWO-TONE GENERATOR

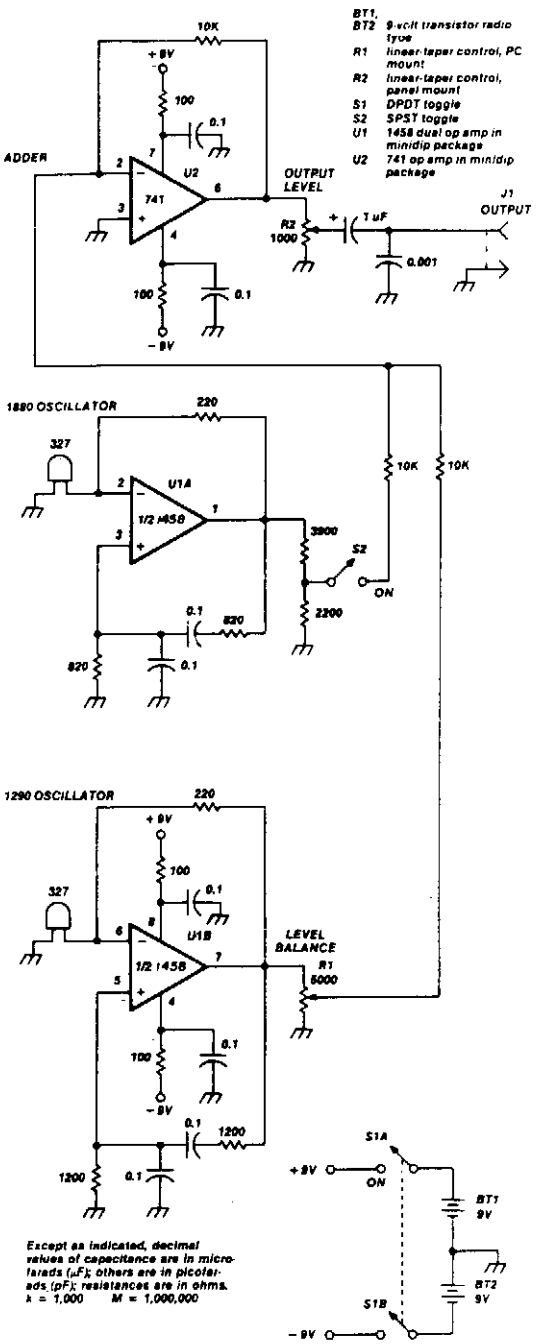

Except as indicated, decimal values of capacitance are in microfarads (μF); others are in picofarads (pF); resistances are in ohms. k = 1,000 M = 1,000,000

Circuit Notes

Two 741 operational amplifiers are used for the active element in this Wien bridge oscillator. (The 1458 is the dual version of the 741.) Frequencies of the two oscillators were chosen to fit standard component values. Other frequencies between 500 and 2000 Hz can be employed. They should not be harmonically related. The output level of U1A is set by a resistive divider, while the output of U1B is adjustable through R1. The output of the two oscillators is combined in U2, an op-amp adder with unity gain. The output from U2 can be adjusted using R2.

HAM RADIO

Fig. 88-11

89

Sirens, Warblers and Wailers

The sources of the following circuits are contained in the Sources section beginning on page 694. The figure number contained in the box of each circuit correlates to the source entry in the Sources section.

Warble Generator
Wailing Alarm
Warble-Tone Alarm
Warbling Tone Generator
Multifunction Siren System
7400 Siren
Toy Siren
Siren Uses TTL Gates
Electronic Ship Siren
Siren Alarm Simulates Star Trek Red Alert
Yelp Oscillator
High Power Siren
"Hee-Haw" Two-Tone Siren
Varying Frequency Warning Alarm

WARBLE GENERATOR

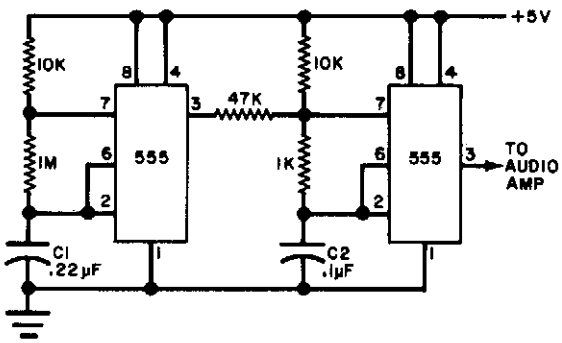

POPULAR ELECTRONICS

Fig. 89-1

Circuit Notes

The circuit uses a pair of 555 timers or a single dual timer. Capacitor C1 controls the speed of the warble, while C2 determines the pitch. The values shown should produce quite a distinctive signal.

WAILING ALARM

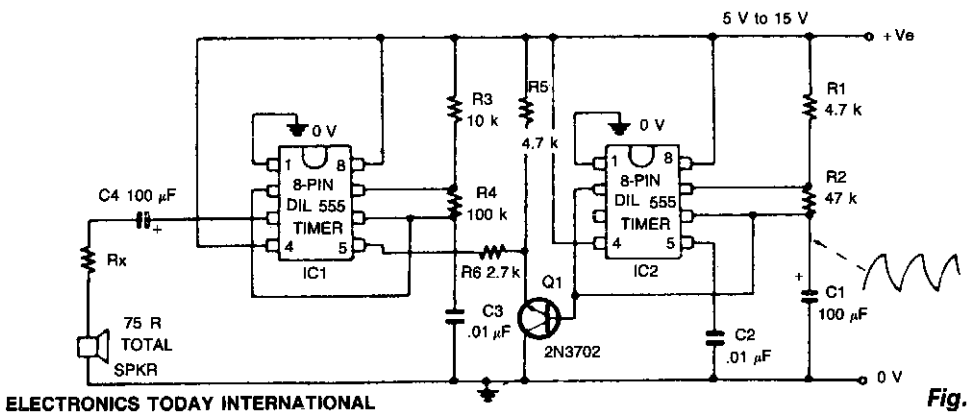

ELECTRONICS TODAY INTERNATIONAL

Fig. 89-2

Circuit Notes

This circuit simulates the sound of an American police siren. IC2 is wired as a low frequency astable that has a cycling period of about 6 seconds. The slowly varying ramp waveform on C1 is fed to pnp emitter follower Q1, and is then used to frequency modulate alarm generator IC1 via R6. IC1 has a natural center frequency of about 800Hz. Circuit action is such that the alarm output signal starts at a low frequency, rises for 3 seconds to a high frequency, then falls over 3 seconds to a low frequency again, and so on ad infinitum.

WARBLE-TONE ALARM

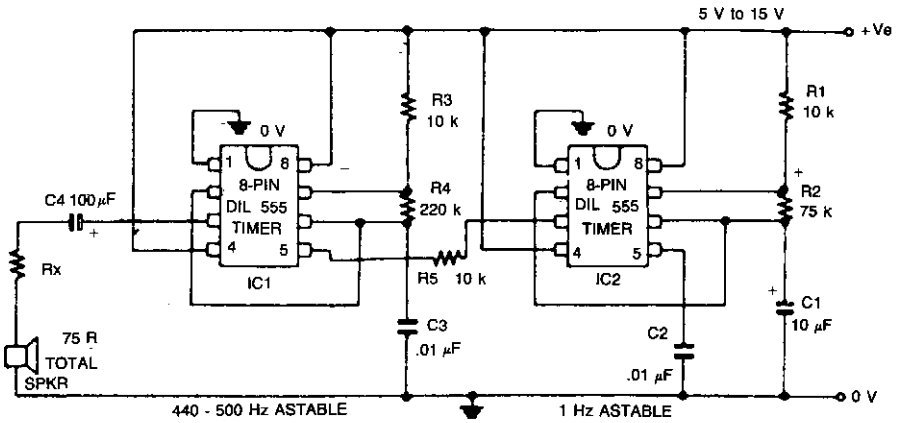

ELECTRONICS TODAY INTERNATIONAL

Fig. 89-3

Circuit Notes

The circuit generates a warble-tone alarm signal that simulates the sound of a British police siren. IC1 is wired as an alarm generator and IC2 is wired as a 1 Hz astable multivibrator. The output of IC2 is used to frequency modulate IC1 via R5. The action is such that the output frequency of IC1 alternates symmetrically between 500 Hz and 440 Hz, taking one sound to complete each alternating cycle.

WARBLING TONE GENERATOR

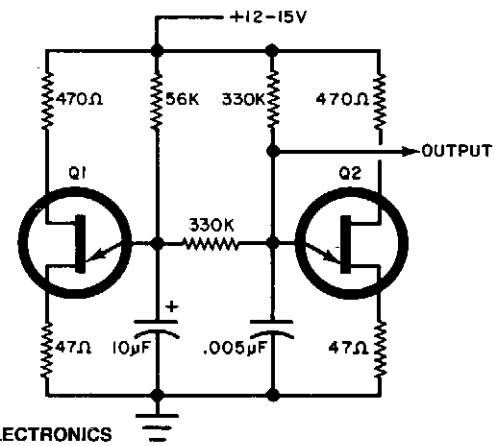

POPULAR ELECTRONICS

Fig. 89-4

Circuit Notes

The circuit use two unijunction transistors. The low-frequency sawtooth generated by Q1 modulates the high-frequency tone generated by Q2. The output should feed into a high-impedance amplifier. Q1 = Q2 = 2N4871.

MULTIFUNCTION SIREN SYSTEM

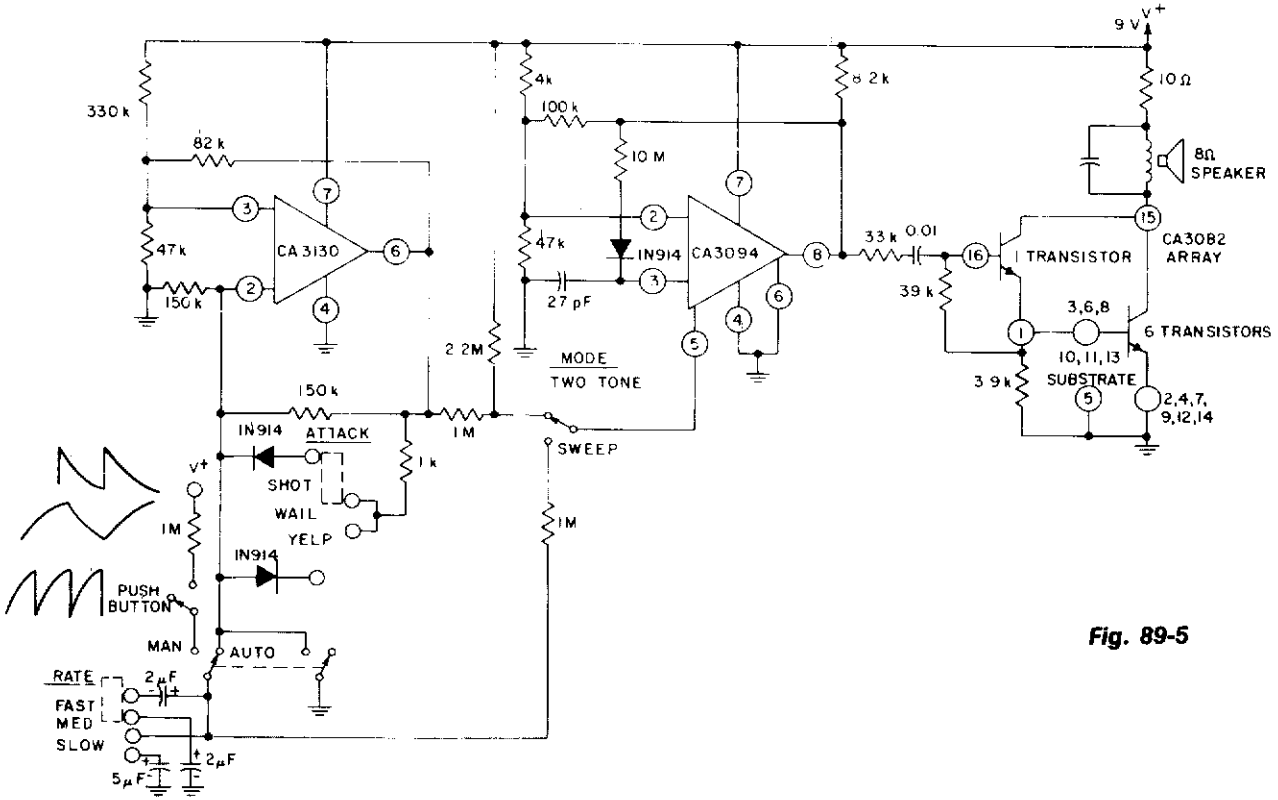

GENERAL ELECTRIC/RCA

Fig. 89-5

Circuit Notes

The circuit uses a CA3130 BiMOS op amp as a multivibrator to control the siren's rate. A CA3094 used as a VCO is followed by a CA3082 transistor array used to drive a speaker. A "Manual" or "Auto" mode switch allows the user to select either intermittent or continuous siren operation, respectively. In addition, three switches are available that control "Mode", "Attack", and "Rate".

7400 SIREN

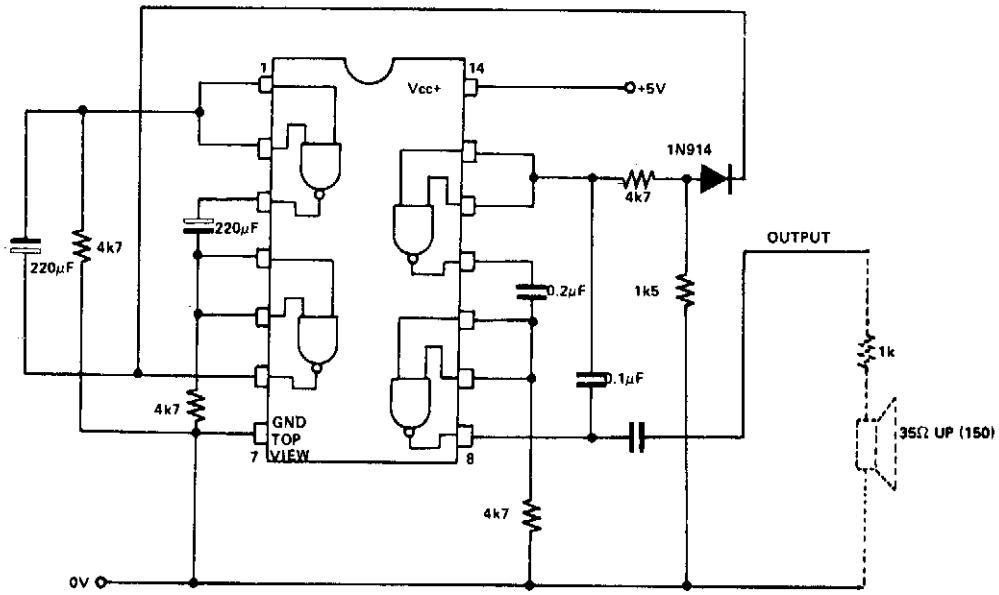

ELECTRONICS TODAY INTERNATIONAL

Fig. 89-6

Circuit Notes

Two NAND gates are used for the oscillator, and two as the control. If the two-tone speed needs to be altered, the 220 µF capacitors can be changed (larger for slower operation). If the frequency of the oscillator is to be changed, the 0.2 and 0.1 µF capacitors can be varied and the value of R1 can be increased. To change frequency range between the two notes, alter the 1.5 k (1,500) resistor.

TOY SIREN

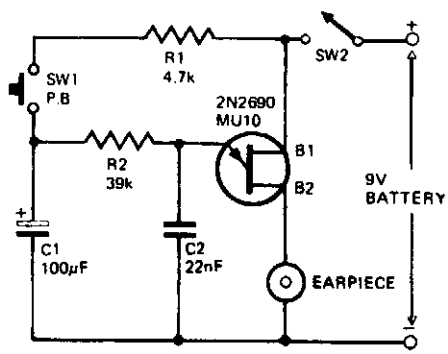

ELECTRONICS TODAY INTERNATIONAL

Fig. 89-7

Circuit Notes

This circuit can be built small enough to fit inside a toy. The circuit consists of a relaxation oscillator utilizing one unijunction transistor (2N2646, MU10, TIS43). R2 and C2 determine the frequency of the tone. Pushing the button, SW1 charges up the capacitor and the potential at the junction of R2 and C2 rises, causing an upswing in the frequency of oscillation. On releasing the pushbutton the charge on C2 will drop slowly with a proportional reduction in the frequency of oscillation. Manual operation of the button at intervals of approximately 2 seconds will produce a siren sound.

SIREN USES TTL GATES

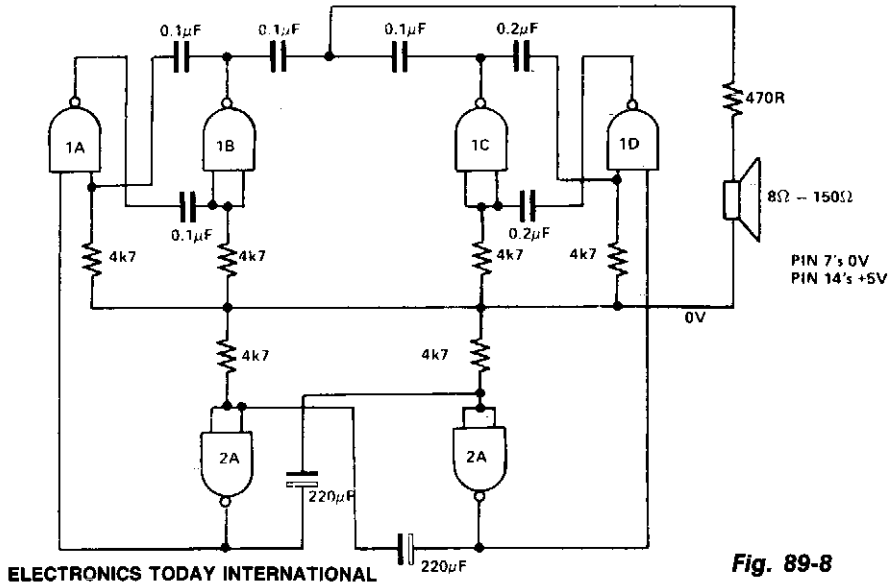

ELECTRONICS TODAY INTERNATIONAL

Fig. 89-8

Circuit Notes

The siren consists of two oscillators which generate the tones. A third oscillator is used to switch the others on and off alternately, giving the two-tone effect. By changing the capacitor values different tones can be produced.

ELECTRONIC SHIP SIREN

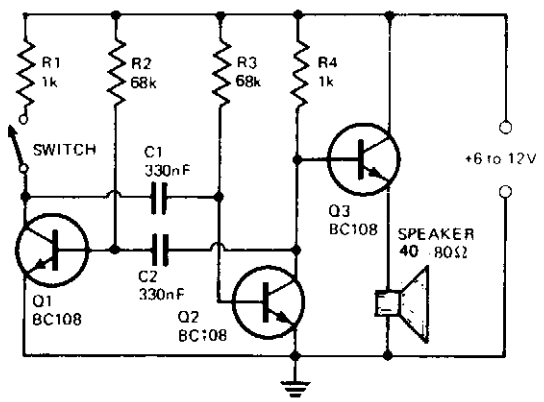

ELECTRONICS TODAY INTERNATIONAL

Fig. 89-9

Circuit Notes

The circuit consists of a multivibrator (Q1 & Q2), and a low power output stage Q3. The speaker should have an impedance in the region of 40 to 80 ohms. To use a low impedance speaker, connect an output transformer from the emitter of Q3 to ground. C1 and C2 determine the pitch of the siren and the values specified will provide a tone of about 300 Hz. Quiescent current is negligible. The output at the collector of Q2 can also be fed into an amplifier input via a 1 μF electrolytic, in series with a 12 k resistor.

SIREN ALARM SIMULATES STAR TREK RED ALERT

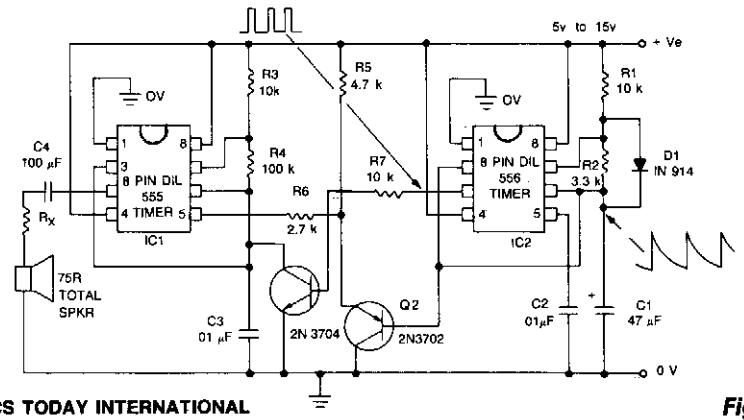

ELECTRONICS TODAY INTERNATIONAL

Fig. 89-10

Circuit Notes

The signal starts at a low frequency, rises for about 1.15 seconds to a high frequency, ceases for about 0.35 seconds, then starts rising again from a low frequency, and so on ad infinitum.

YELP OSCILLATOR

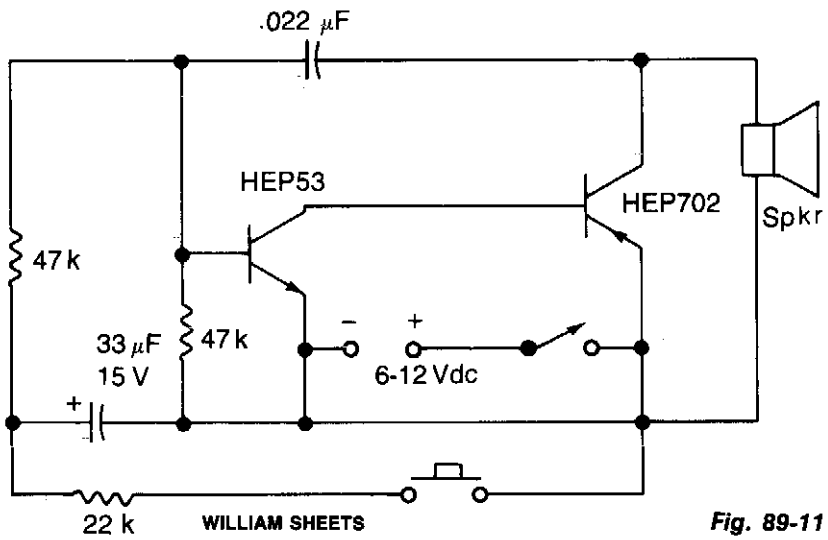

WILLIAM SHEETS

Fig. 89-11

Circuit Notes

Close the pushbutton switch and the circuit starts the siren up-shifting to a higher frequency. Release it and the tone slides down until S2 is closed again. Tone quality is adjusted by changing the 0.022 μF capacitor.

HIGH POWER SIREN

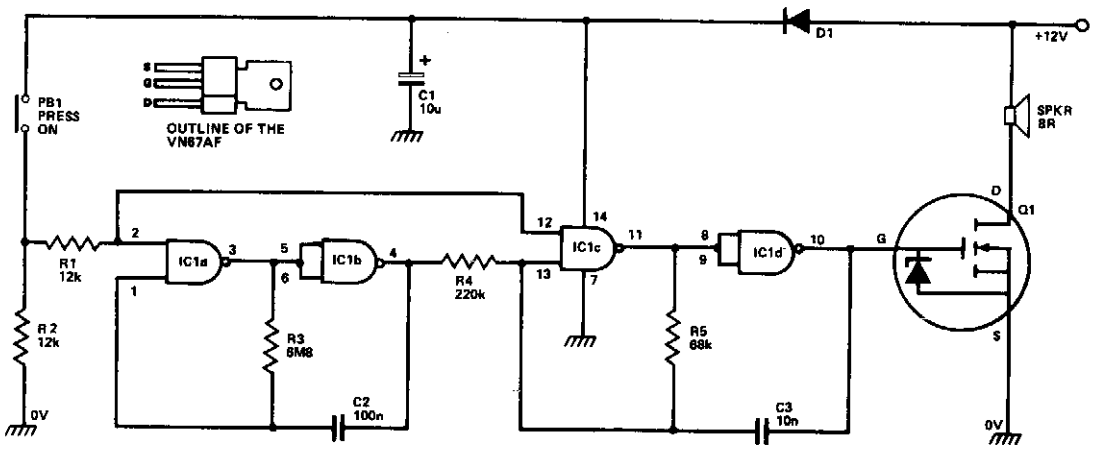

ELECTRONICS TODAY INTERNATIONAL

Fig. 89-12

Circuit Notes

IC1a and IC1b are wired as a slow astable multivibrator and IC1c-IC1d are wired as a fast astable. Both are "gated" types, which can be turned on and off via PB1. The output of the slow astable modulates the frequency of the fast astable, and the output of the fast astable is fed to the external speaker via the Q1 VMOS power FET amplifier stage.

"HEE-HAW" TWO-TONE SIREN

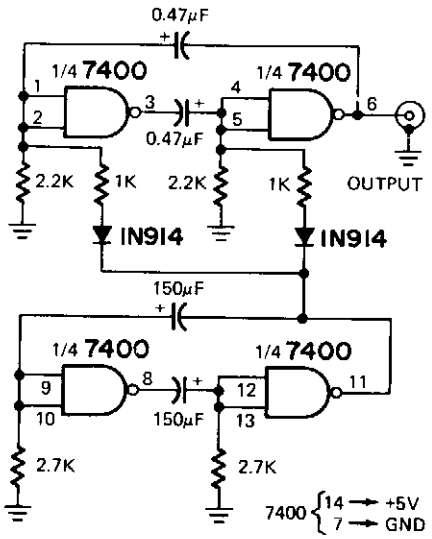

RADIO-ELECTRONICS

Fig. 89-13

Circuit Notes

The circuit uses two gates of a 7400 IC cross-connected to form an astable multivibrator driven by the 1-pulse per second output of the digital clock IC. The hee-haw circuit has a low frequency astable modulator added to make a self-contained European-type siren. Tone and rate can be varied as desired by changing capacitor values. If the tone is too harsh, a simple R-C filter will remove the harmonic content—the multivibrator output is almost a square wave. With the resistor values shown, no start-up problems occur; but if the 2.2 k or 2.7 k resistors are changed too much, latch-up can be a problem.

VARYING-FREQUENCY WARNING ALARM

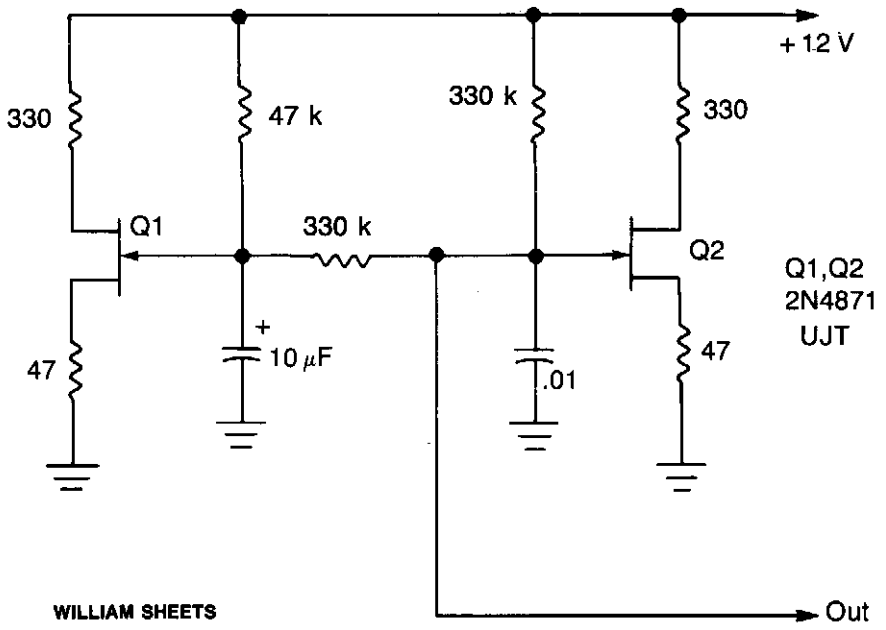

Fig. 89-14

Circuit Notes

The output frequency changes continuously. Low frequency oscillator (Q1) modulates high frequency oscillator Q2 and its associated timing capacitor.

90

Sound (Audio) Operated Circuits

The sources of the following circuits are contained in the Sources section beginning on page 694. The figure number contained in the box of each circuit correlates to the source entry in the Sources section.

Sound-Activated Switch
Sound-Activated ac Switch
VOX Box
Color Organ
Basic Color Organ

SOUND-ACTIVATED SWITCH

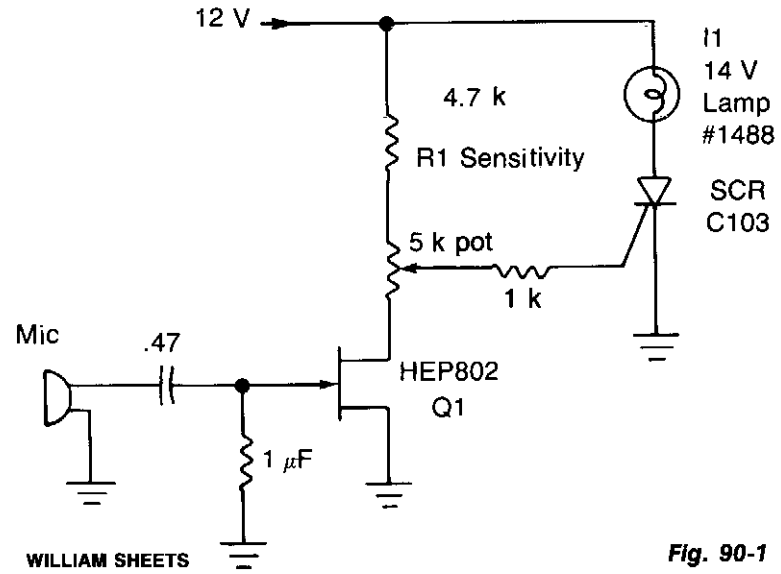

WILLIAM SHEETS

Fig. 90-1

Circuit Notes

The audio from Mic is amplified by Q1. Peaks of signal (adjusted by R1) greater than about 0.7 volts trigger the SCR and light lamp I1.

SOUND-ACTIVATED ac SWITCH

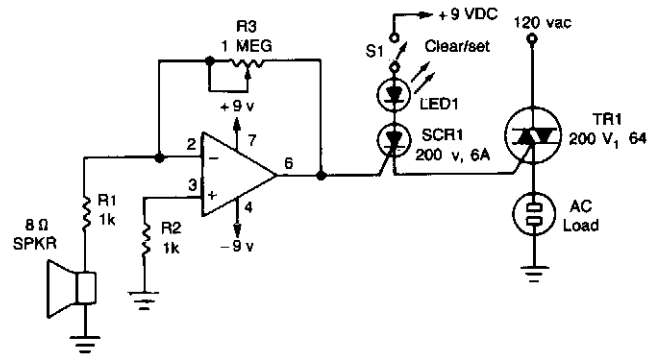

RADIO-ELECTRONICS

Fig. 90-2

Circuit Notes

The circuit uses a 741 op amp operating as an inverting amplifier to amplify the voltage produced by an 8-ohm speaker used to detect any sounds. The feedback resistor R3, a 1-megohm potentiometer used to vary the gain of the amplifier determines the sensitivity of the circuit. When S1 is closed in the (SET) position and a sound is applied to the speaker, SCR1 is turned on. It will remain in conduction until the anode voltage is removed by opening S1, putting it in its RESET position. (Once an SCR is turned on, the gate or trigger has no control over the circuit.) As long as the SCR conducts, the Triac, TR1, will remain on and supply voltage to the load.

VOX BOX

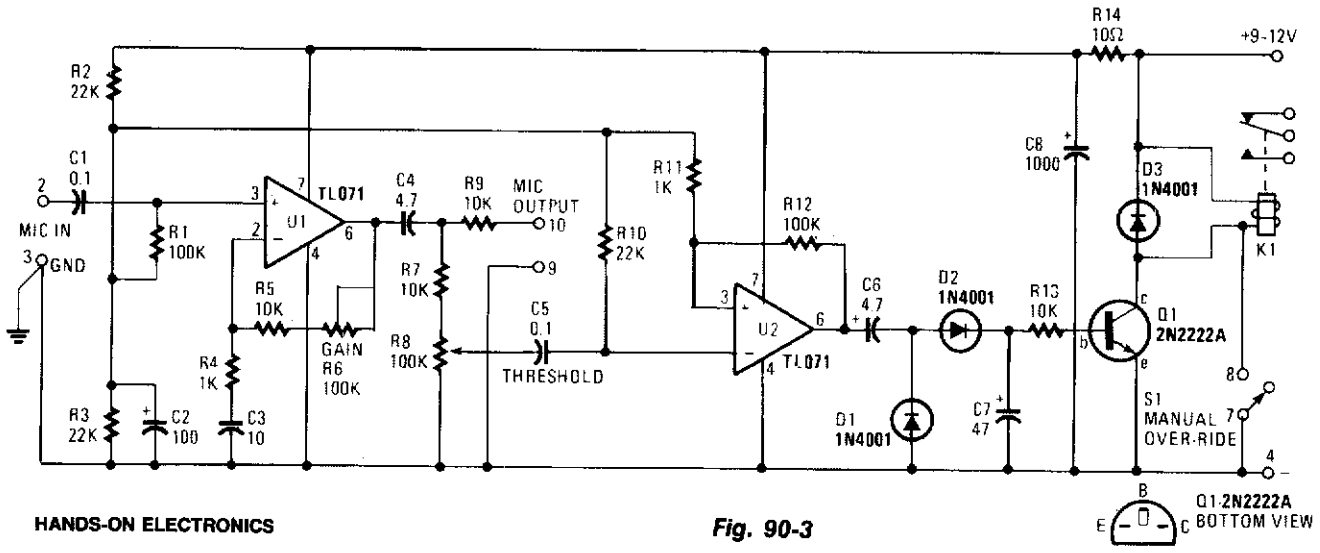

HANDS-ON ELECTRONICS

Fig. 90-3

Circuit Notes

The electronic circuit in the VOX Box consists of three parts: a microphone preamplifier, a Schmitt trigger, and a relay driver. Input signals (MIC INPUT terminals) to the microphone preamplifier (U1) are amplified and fed to a THRESHOLD control (R8). When the preselected threshold voltage level is exceeded, the output of the Schmitt trigger (U2) immediately goes high. The signal from U2 is rectified and the voltage developed across C7 turns on the relay energizer transistor (Q1). That transistor action passes pull-down current through the coil of relay K1. The changing of the relay SPDT contacts can be used to either make or break an external ac or dc circuit.

COLOR ORGAN

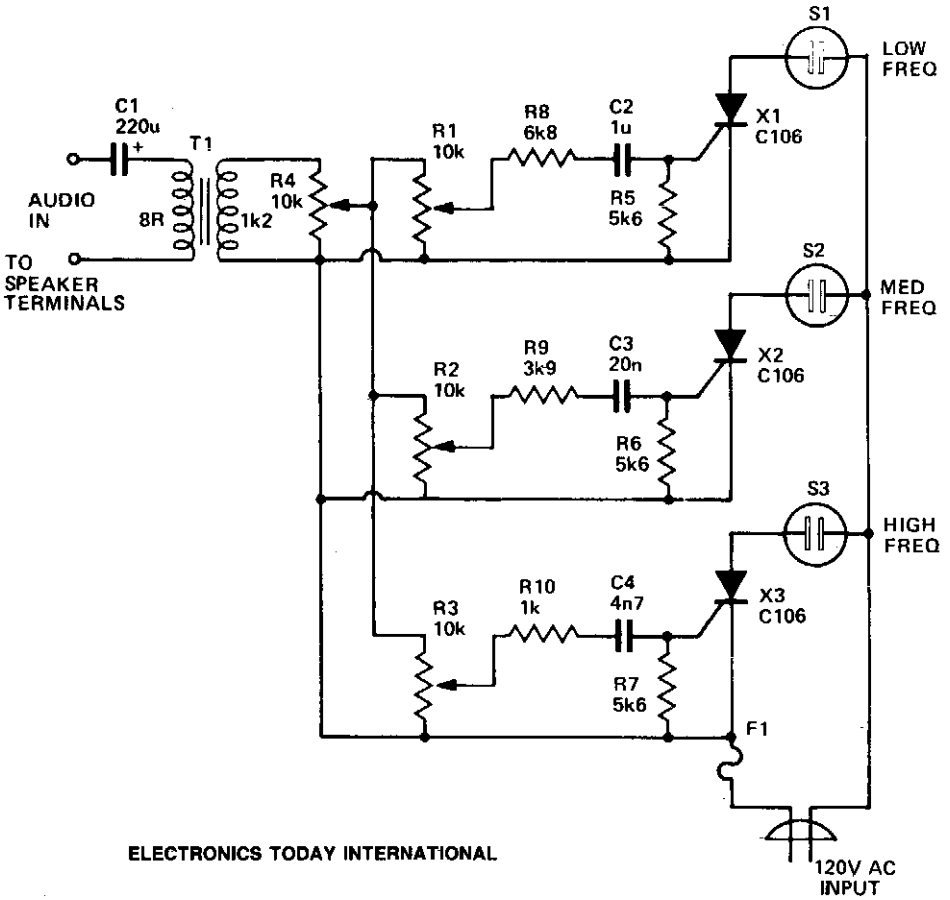

Fig. 90-4

Circuit Notes

Three lights are controlled by the three channels. One light will pulse in response to the bass, another illuminates with mid-range sounds, and the last lights for high notes. Four level controls allow adjustment of overall light level and each channel individually. Up to 200 watts per channel can be handled.

BASIC COLOR ORGAN

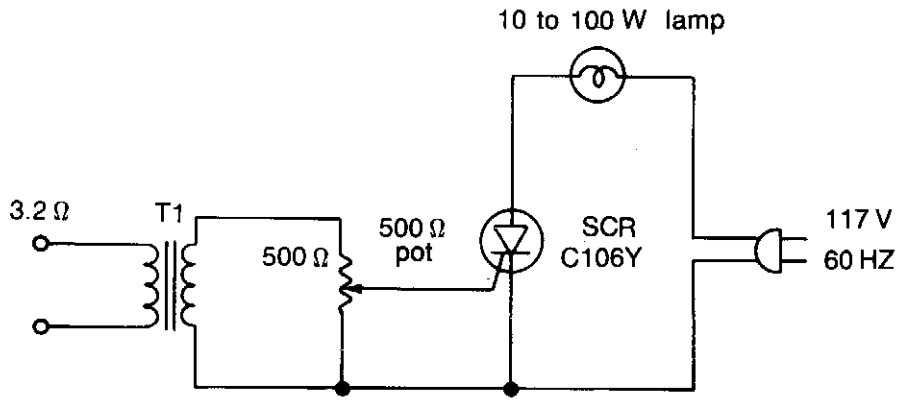

WILLIAM SHEETS

Fig. 90-5

Circuit Notes

Transformer T1 can be any matching transistor type in the range of 500/500 to 2500/2500 ohms. No connections from the SCR or its components are connected to ground. For safety's sake, keep the 117-V line voltage from the amplifier connections—that is the reason for using T1. To adjust, set potentiometer R1 "off" and adjust the amplifier volume control for a normal listening level. Then adjust the potentiometer until the lamp starts to throb in step with the beat.

91

Sound Effect Circuits

The sources of the following circuits are contained in the Sources section beginning on page 694. The figure number contained in the box of each circuit correlates to the source entry in the Sources section.

Sound Effects Generator
Electronic Bongos
Train Chuffer
Bird Chirp
Steam Locomotive Whistle
WAA-WAA Circuit
Unusual Fuzz
Autodrum
Twang-Twang Circuit
Steam Train/Prop Plane
Funk Box

SOUND EFFECTS GENERATOR

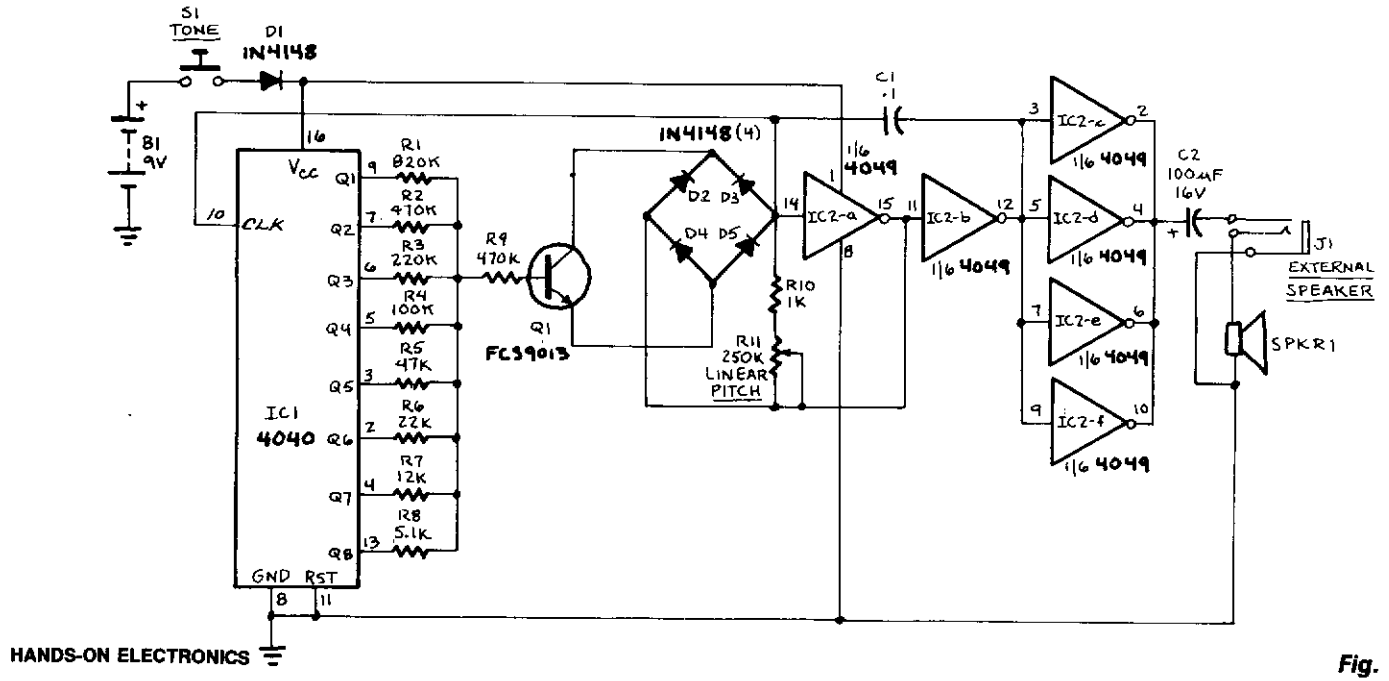

Fig. 91-1

Circuit Notes

This circuit can generate a European police-car siren, bird noises, spaceship sounds, etc. In addition, it can be put to use as a doorbell, an alarm, etc. The circuit consists of four parts: a binary counter, a D/A converter, a VCO, and an audio output amplifier. The initial frequency of oscillation is determined by potentiometer R11. The VCO first oscillates at a relatively low frequency, and gradually picks up speed as the control voltage supplied by the D/A converter increases. The D/A converter is the group of resistors R1-R8. When none of IC1's outputs is active, little current will flow into the base of Q1, so the VCO's control voltage will be low. As more and more counter outputs become active, base current increases, and thereby so does the VCO's frequency of oscillation. The VCO itself is composed of IC2-a, IC2-b, Q1, and the timing network comprising D1-D4, C1, R10, and R11. The buffer amplifier is made up of the four remaining gates from IC2, all wired in parallel.

ELECTRONIC BONGOS

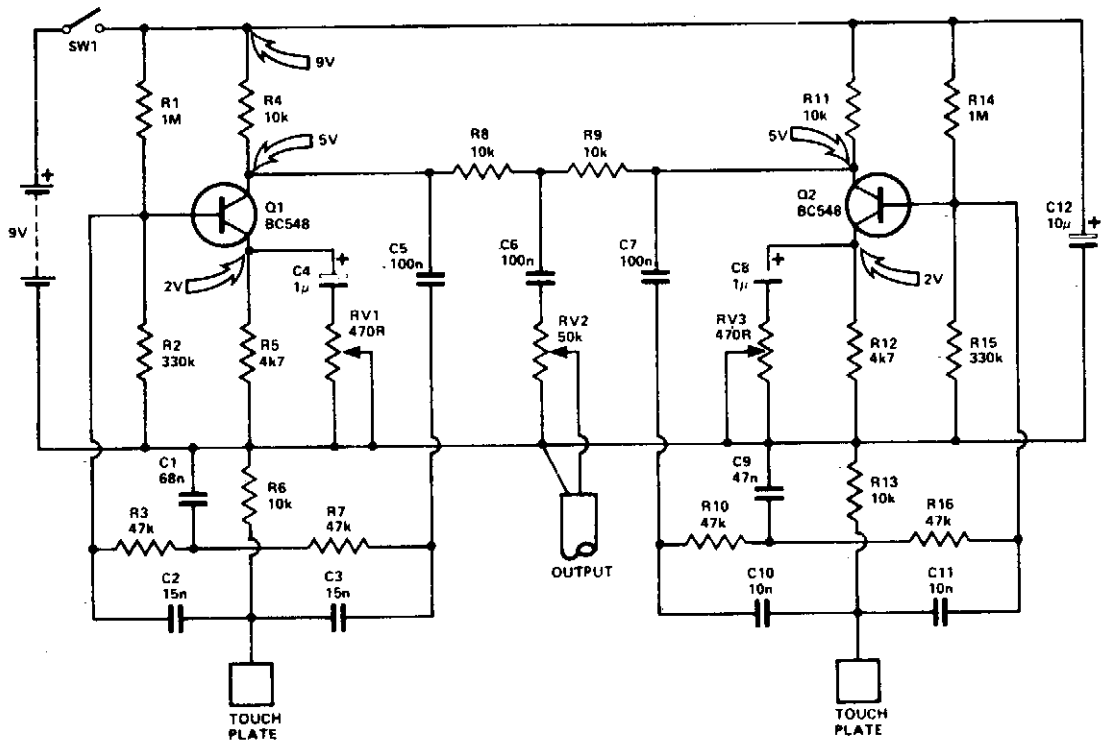

ELECTRONICS TODAY INTERNATIONAL

Circuit Notes

This circuit consists of twin-T sine-wave oscillators. Each oscillator has a filter in the feedback loop. If the loop gain is greater than unity, the circuit will oscillate. Gain is adjusted to be just less than unity. Touching the touch plate starts the oscillator, but the moment your finger is removed from the touch plate the oscillations will die away. The rate of decay is a function of circuit gain and controlled by RV1 (and RV3).

TRAIN CHUFFER

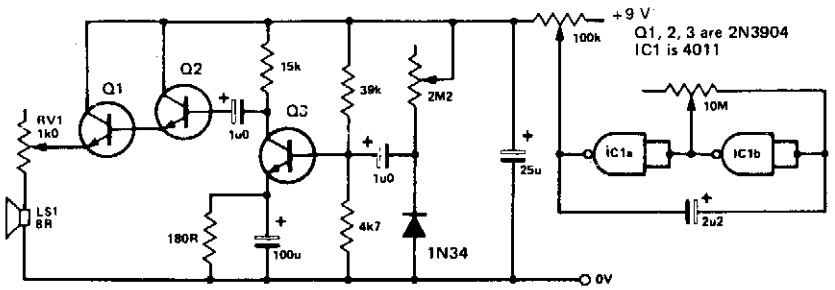

ELECTRONICS TODAY INTERNATIONAL

Fig. 91-3

Circuit Notes

The circuit consists of a white noise generator which only switches on with the high part of the square wave output from the clock circuit. The frequency of the clock is adjusted with the 10 M pot and the output voltage of the clock is adjusted by the 100 k pot (rate and volume of chuff respectively). The 2M2 pot controls the amount of noise produced and the 1 k pot on the speaker controls the pitch of the average noise.

BIRD CHIRP

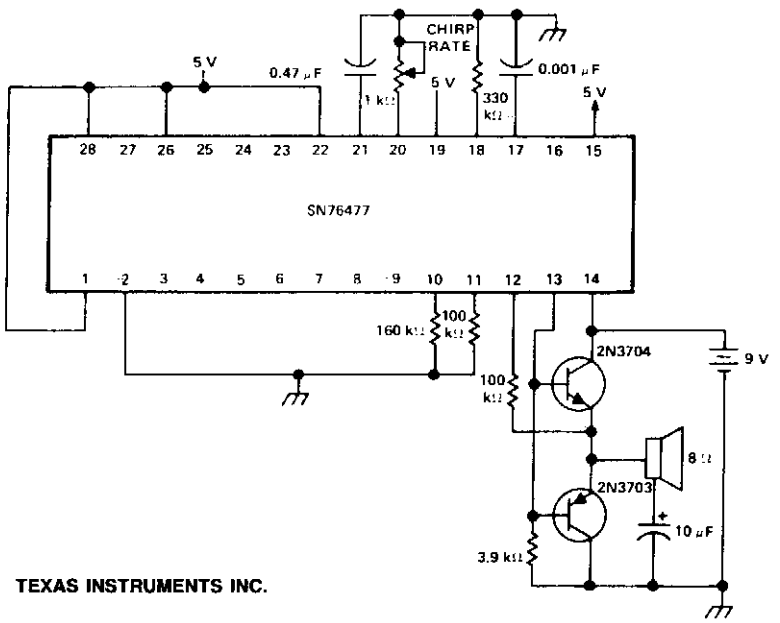

TEXAS INSTRUMENTS INC.

Fig. 91-4

Circuit Notes

For a barking dog, the capacitor at pin 17 is changed to 15 pF to increase the frequency of the VCO.

STEAM LOCOMOTIVE WHISTLE

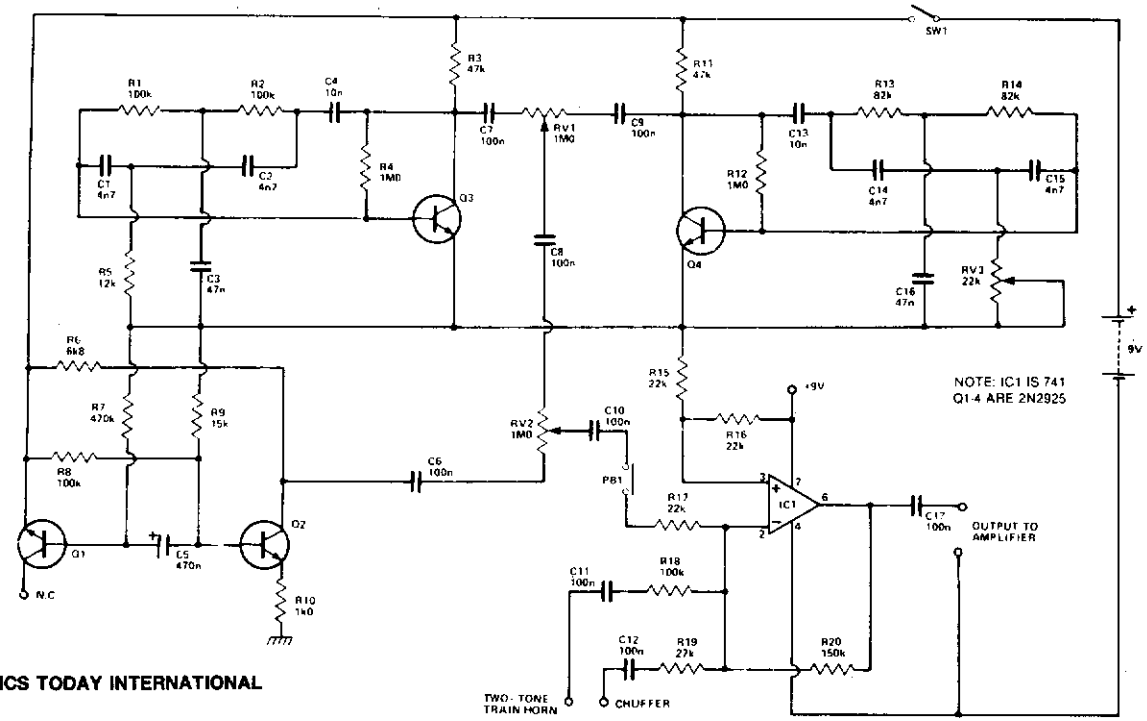

ELECTRONICS TODAY INTERNATIONAL

Fig. 91-5

Circuit Notes

The waveform of a steam whistle is a complex combination of white noise and an audio frequency oscillation. The noise generator is a transistor (Q1) biased into zener mode. The audio frequency oscillation is a straightforward mixture of two similar (but not identical) sine waves, which after their addition produce a more complex waveshape. The sine wave generators are twin-t oscillators. Preset RV1 mixes the two sine waves so that an appropriate waveform is obtained. RV2 mixes this waveform with the white noise. Adjustment of all three presets will result in the required sound. Integrated circuit IC1 is an operational amplifier used as a simple mixer/amplifier which combines the steam whistle, chuffer, (generated elsewhere) and two-tone horn sounds into one, suitable for amplification by an external amplifier.

WAA-WAA CIRCUIT

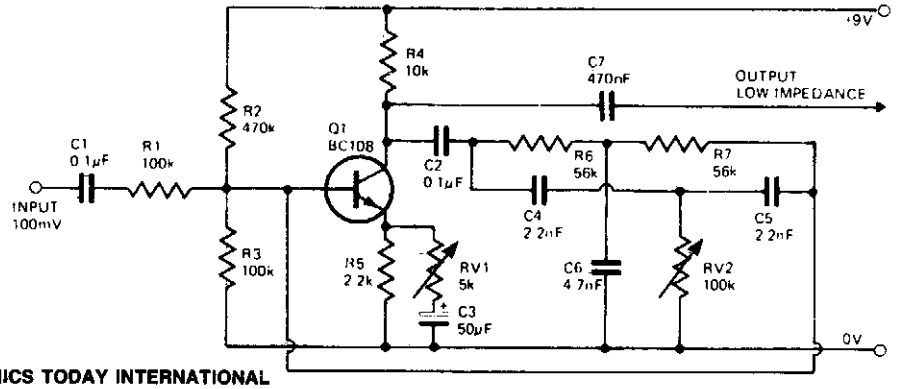

ELECTRONICS TODAY INTERNATIONAL

Fig. 91-6

Circuit Notes

The waa-waa effect is achieved as certain frequencies are amplified more than others. A phase shift RC oscillator makes up the basic circuit. Negative feedback is obtained by feeding part of the signal back to the base. When adjusting initially, RV1 is turned to minimum. RV2 is adjusted to a point at which an audible whistle appears indicating oscillation. RV1 is then adjusted till the oscillation just disappears. It should be possible to set RV2 to any value without any oscillation, this should also be achieved with the minimum possible value of RV1.

UNUSUAL FUZZ

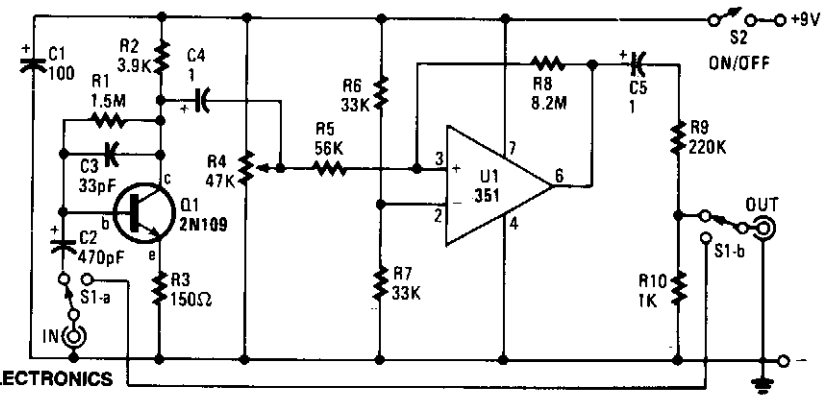

HANDS-ON ELECTRONICS

Fig. 91-7

Circuit Notes

It seems that guitar fuzz boxes have been around since the beginning of rock, and have seen little improvement over the years. This one is somewhat different because rather than simply distorting the sound, it also pulses in step with the peaks of the waveform from the pickup because of the Schmitt trigger op amp circuit. Capacitor C2 requires some explanation. It should normally be a 1- or 2-µF electrolytic capacitor. However, we show the value as 470 pF because it's recommended as an experimental value giving far out effects.

AUTODRUM

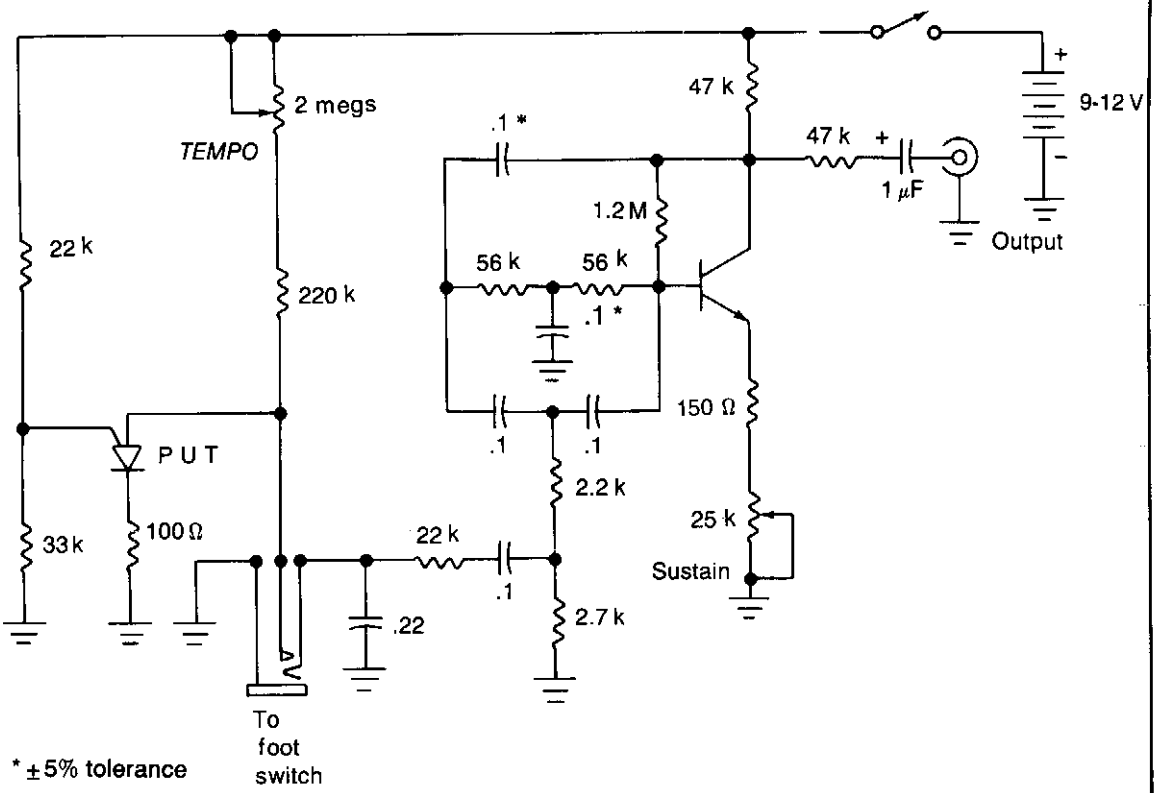

WILLIAM SHEETS

Fig. 91-8

Circuit Notes

This unit generates a drum-like damped oscillation that sounds best when fed into a higher power amplifier. The beat rate may be determined by operating a foot pedal in much the same manner as for a real drum, or by means of an internal oscillator, the speed of which may be preset.

TWANG-TWANG CIRCUIT

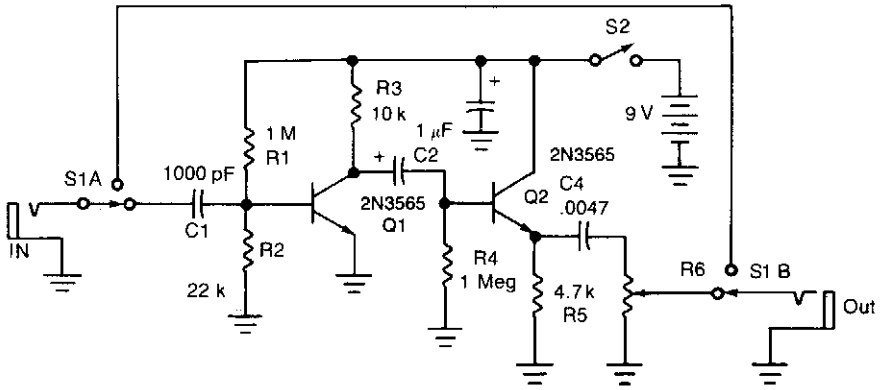

WILLIAM SHEETS

Fig. 91-9

Circuit Notes

Twang is a guitar sound that more or less approximates a banjo or mandolin. The circuit produces unusual sounds from an ordinary electric guitar by cutting the bass, severely distorting the midband and highs, and then amplifying the distortion. S1 cuts the effect in and out, S2 turns the unit on and off.

STEAM TRAIN/PROP PLANE

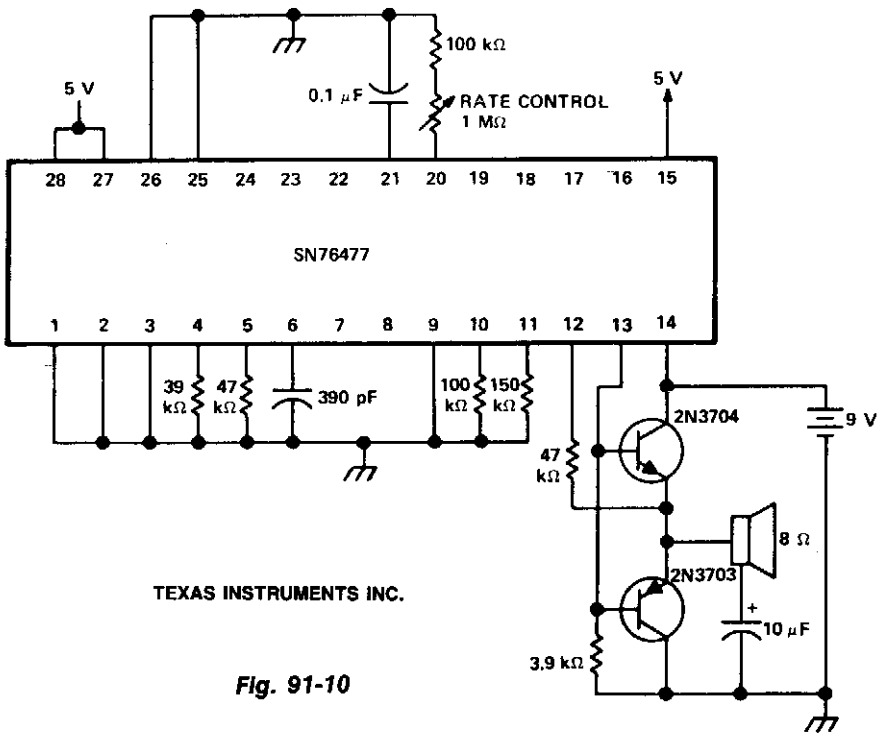

TEXAS INSTRUMENTS INC.

Fig. 91-10

FUNK BOX

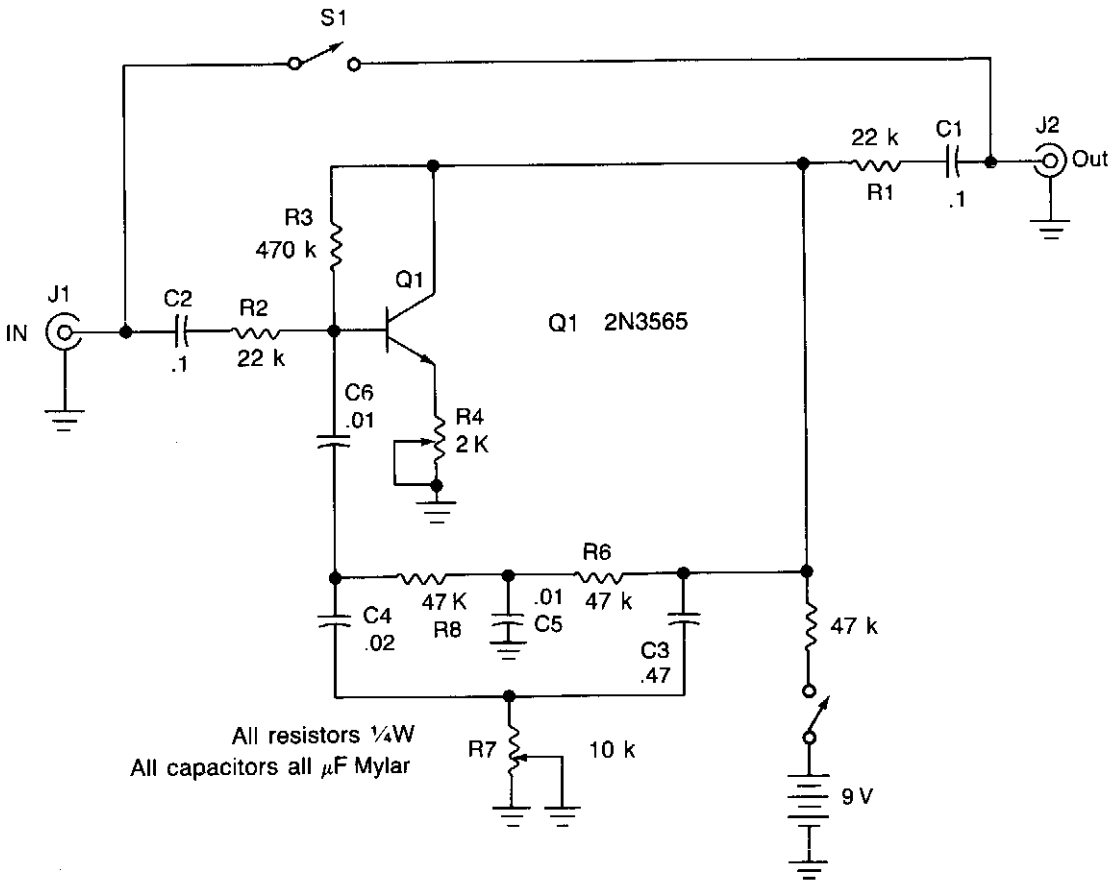

WILLIAM SHEETS

Fig. 91-11

Circuit Notes

Adjusting potentiometer R7 adds extra twang from way down low to way up high. To set the unit, adjust potentiometer R4 until you hear a whistle (oscillation); then back off R4 until the oscillation just ceases. The effect can be varied from bass to treble by R7.

92
Square-Wave Generators

The sources of the following circuits are contained in the Sources section beginning on page 694. The figure number contained in the box of each circuit correlates to the source entry in the Sources section.

Low Frequency TTL Oscillator
Square-Wave Generator Using a 555 Timer
Oscillator with Frequency Doubled Output
CMOS 555 Astable Generates True Rail-to-Rail Square Waves
Square-Wave Oscillator
Astable Multivibrator
Two-MHz Square-Wave Generator Uses Two TTL Gates
Phase Tracking Three-Phase Generator
Line Frequency Square-Wave Generator
Three Phase Square-Wave Output Generator

LOW FREQUENCY TTL OSCILLATOR

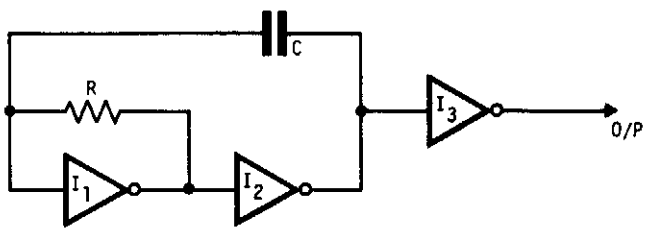

ELECTRONIC ENGINEERING *Fig. 92-1*

Circuit Notes

This oscillator uses standard inverters, one resistor and one capacitor, and has no minimum operating frequency. R and C must be chosen such that currents into the gates are below recommended operating limits and that leakage current into the gates and into C are small in comparison with the current in R also the output should be buffered (I3) to prevent variations in load affecting frequency. This circuit may also be used to square up slowly changing logic levels by use of multi input gates (NANDS, NORS Etc).

SQUARE-WAVE GENERATOR USING A 555 TIMER

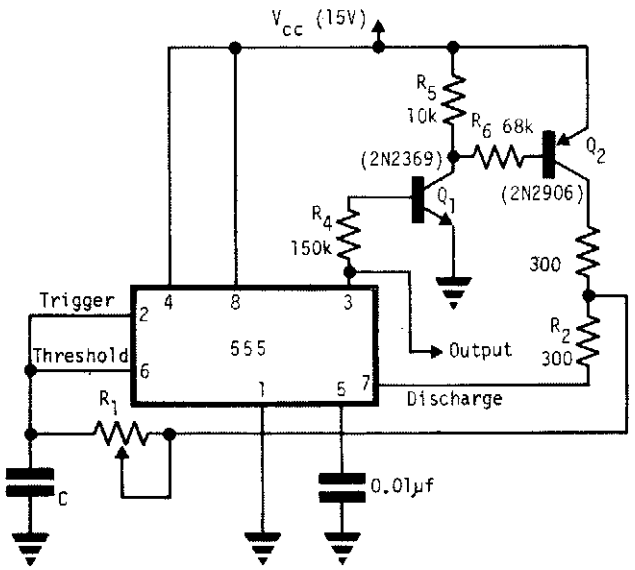

ELECTRONIC ENGINEERING *Fig. 92-2*

Circuit Notes

A single timing resistor ensures that the output is a square (50% duty cycle) wave at all frequency settings.

OSCILLATOR WITH FREQUENCY DOUBLED OUTPUT

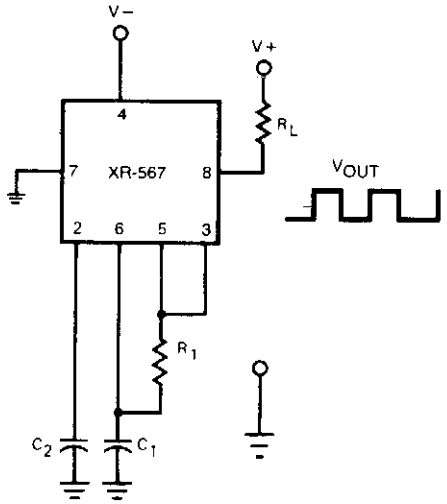

EXAR

Fig. 92-3

Circuit Notes

The current-controlled oscillator frequency can be doubled by applying a portion of the square-wave output at pin 5 back to the input at pin 3, as shown. In this manner, the quadrature detector functions as a frequency doubler and produces an output of 2 f_0 at pin 8.

CMOS 555 ASTABLE GENERATES TRUE RAIL-TO-RAIL SQUARE WAVES

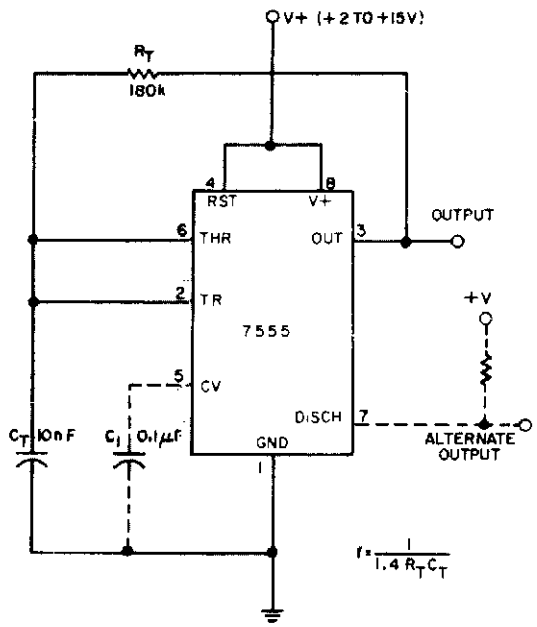

ELECTRONIC DESIGN

Fig. 92-4

Circuit Notes

A CMOS timer generates true square waves because, unlike the bipolar 555, its output swings from rail to rail. The component values shown give a frequency of about 400 Hz.

SQUARE-WAVE OSCILLATOR

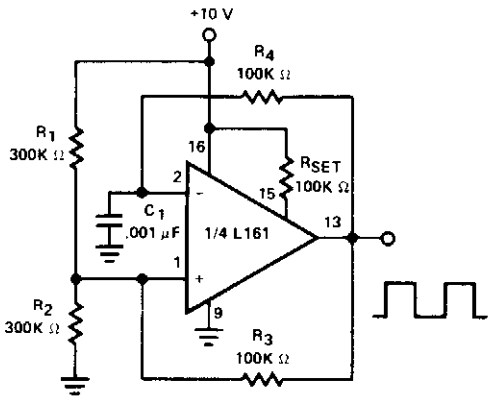

Fig. 92-5

SILICONIX

ASTABLE MULTIVIBRATOR

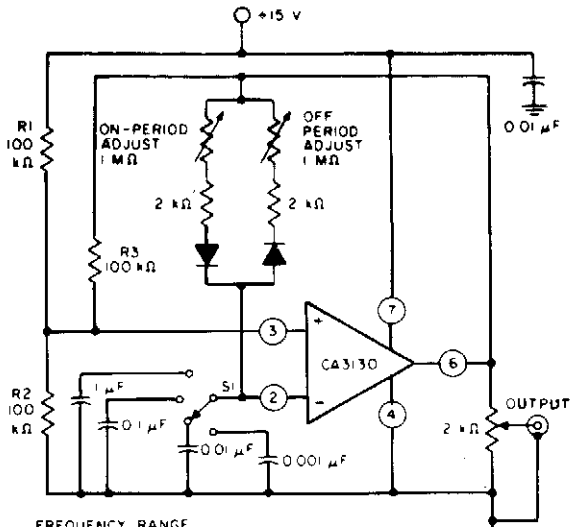

FREQUENCY RANGE

POSITION OF S1	PULSE PERIOD
0.001 μF	4 μs TO 1 ms
0.01 μF	40 μs TO 10 ms
0.1 μF	0.4 ms TO 100 ms
1 μF	4 ms TO 1 s

GENERAL ELECTRIC/RCA

Fig. 92-6

Circuit Notes

The circuit with independent control of "ON" and "OFF" periods uses the CA3130 BiMOS op amp for filters, oscillators, and long-duration timers. With input current at 50 pA, oscillators can utilize large-resistor/small-capacitor combinations without loading effects.

TWO-MHz SQUARE-WAVE GENERATOR USES TWO TTL GATES

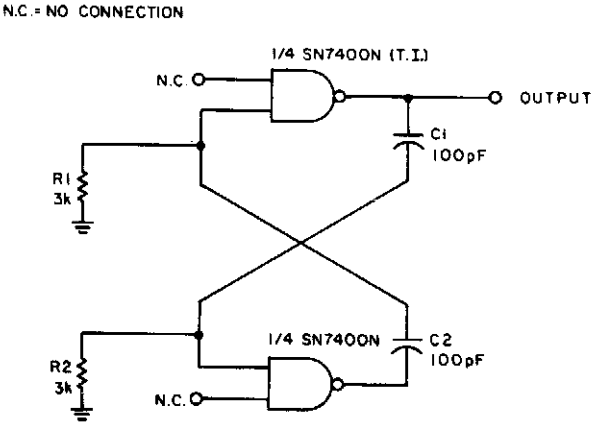

ELECTRONIC DESIGN

Fig. 92-7

Circuit Notes

With the values shown the circuit generates a 2-MHz symmetrical square wave. Changing capacitors C1 and C2 to 0.01 μF results in a frequency of 500 Hz. For the particular integrated circuits and power supply voltages (5.0 V), the reliable operating range of R1 = R2 is 2 k ohm to 4 k ohm.

PHASE TRACKING THREE-PHASE GENERATOR

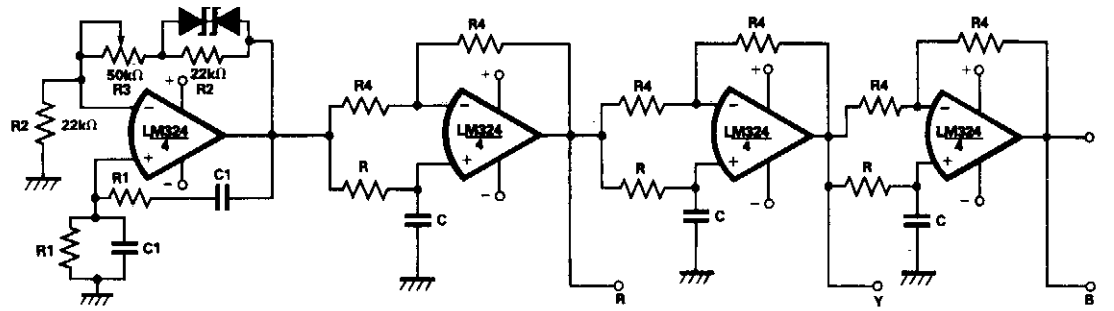

ELECTRONIC ENGINEERING

Fig. 92-8

Circuit Notes

Using a single chip LM324 can, with active R-C networks, reduce the size of a 3-phase waveform generator, and prove useful in compact and stable 3-phase inverters. One quarter of an LM324 is used as a Wien bridge oscillator generating a pure sinusoidal waveform while the remaining parts of the LM324 are used as three 120° fixed phase shifters. Initially potentiometer R3 should be varied to adjust the loop gain of the oscillator in order to start the oscillator.

LINE FREQUENCY SQUARE-WAVE GENERATOR

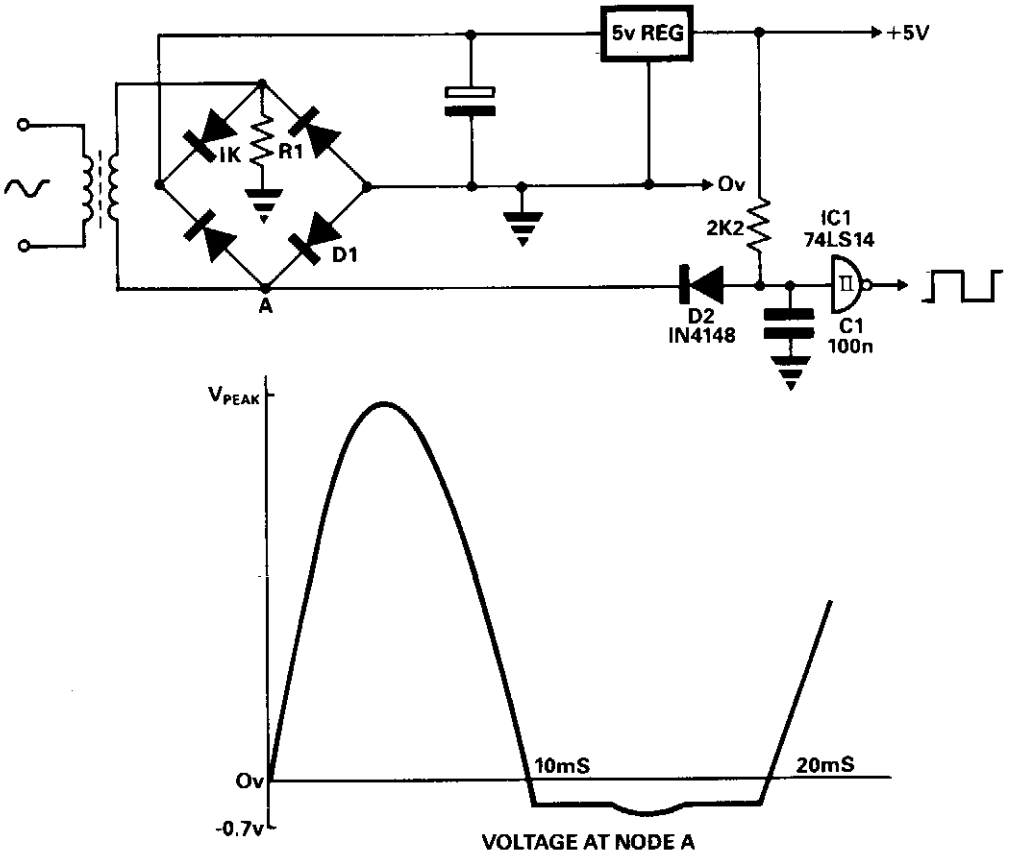

Fig. 92-9

ELECTRONIC ENGINEERING

Circuit Notes

With only three components and a buffer, a line frequency square wave having a 1:1 duty cycle may be derived from the power supply. During the alternate half-cycle, however, A is effectively clamped to −0.7 V by D1 in the bridge which offsets the forward voltage across D2 giving an input to IC1 of approximately 0 V. When A rises above +5 V, D2 is reverse biased and remains at +5 V. R1 is needed to load the transformer secondary maintaining a distortion-free waveform at A during the time the diode bridge is not conducting. C1 although not essential may be required to remove transients.

THREE PHASE SQUARE-WAVE OUTPUT GENERATOR

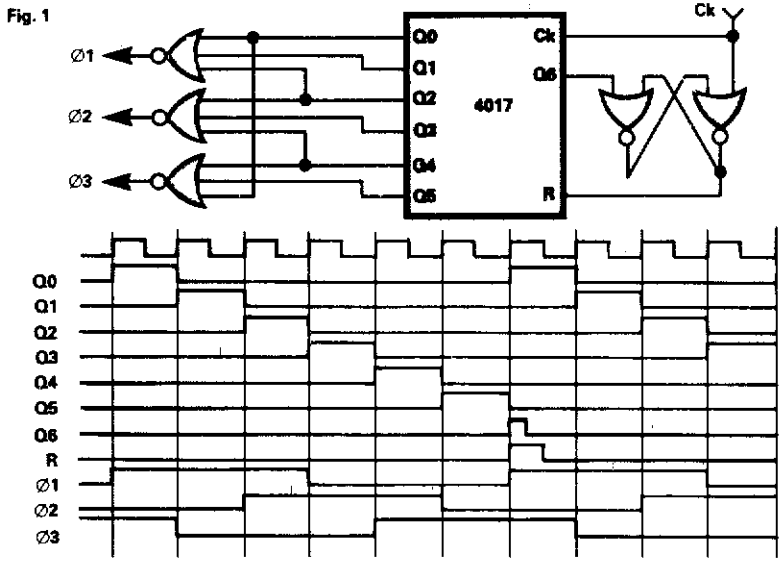

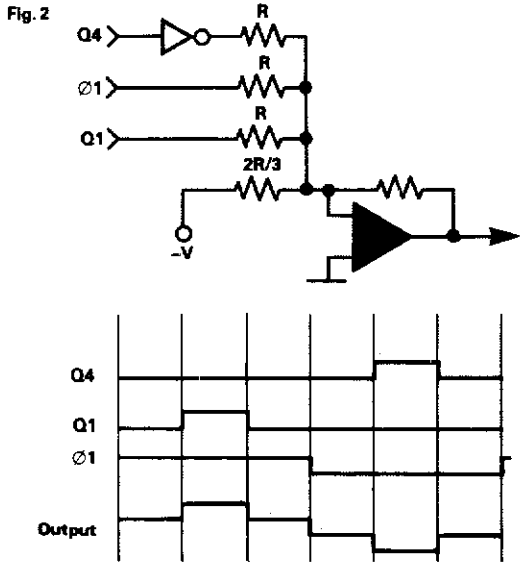

ELECTRONIC ENGINEERING

Fig. 92-10

Circuit Notes

This circuit gives a 3 phase square-wave output for a variable speed motor drive. Operation is straightforward, the 4017 counter is synchronously reset after six clock inputs. The six outputs are combined to give the required waveforms. It is interesting to note that although NOR gates are shown, OR gates will give effectively the same result. The circuit can be extended as shown in Fig. 2 to give pseudo-sine waves if that is required, but that will diminish the simplicity of the circuit.

93
Staircase Generator Circuits

The sources of the following circuits are contained in the Sources section beginning on page 694. The figure number contained in the box of each circuit correlates to the source entry in the Sources section.

Staircase Generator
Staircase Generator II

STAIRCASE GENERATOR

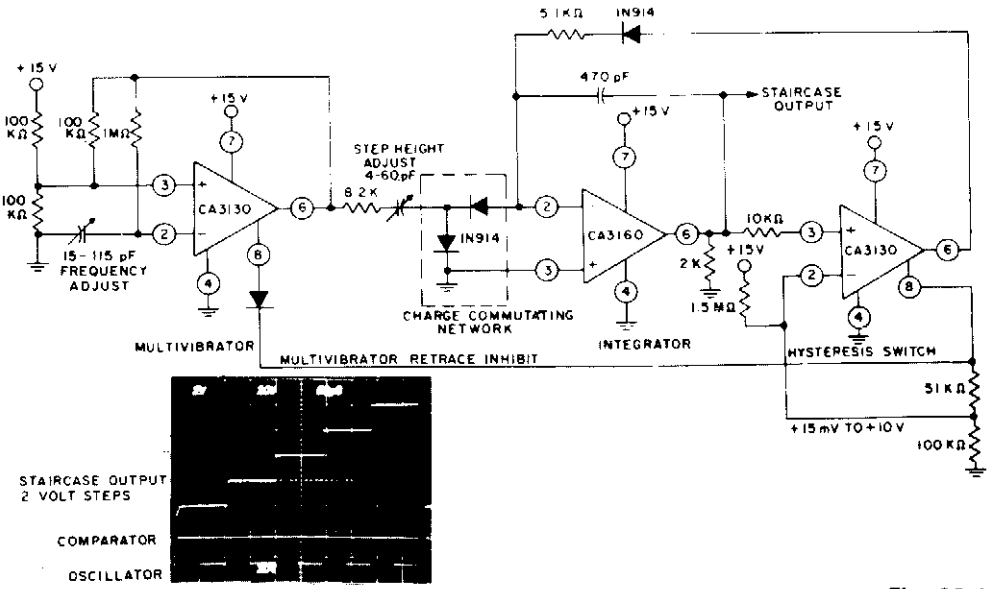

GENERAL ELECTRIC/RCA

Fig. 93-1

Circuit Notes

The circuit uses three BiMOS op amps. Two CA3130's are used, one as a multivibrator and the other as a hysteresis switch. The third amplifier, a CA3160, is used as a linear staircase generator.

STAIRCASE GENERATOR II

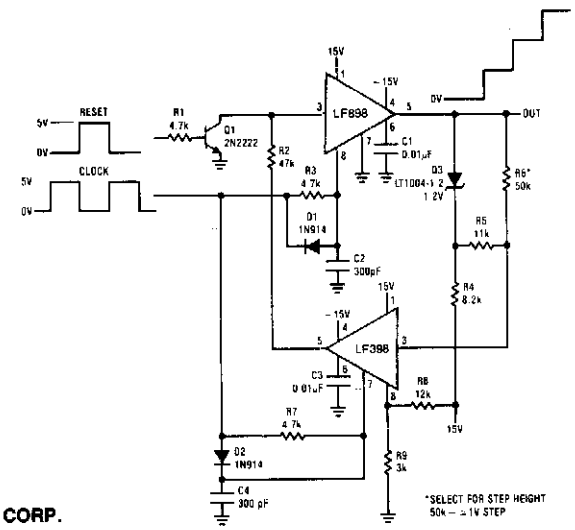

LINEAR TECHNOLOGY CORP.

Fig. 93-2

94
Stereo Balance Circuits

The sources of the following circuits are contained in the Sources section beginning on page 694. The figure number contained in the box of each circuit correlates to the source entry in the Sources section.

Stereo Balance Tester
Stereo Balance Meter

STEREO BALANCE TESTER

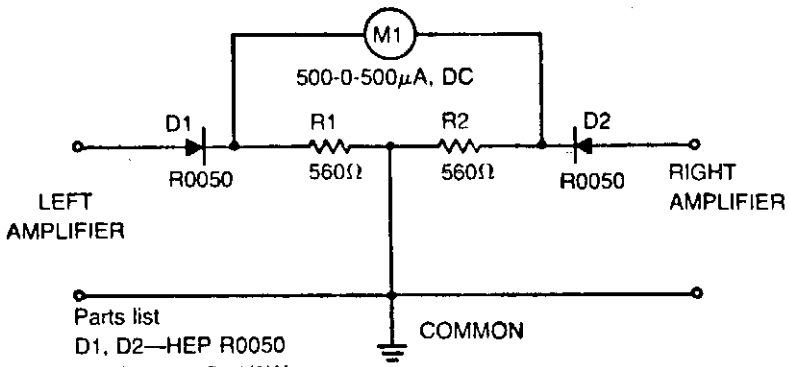

Parts list
D1, D2—HEP R0050
R1, R2—560Ω, 1/2W
M1—400-0-500μA dc meter, zero center scale Simpson panel, Newark Electronics 55F480

TAB BOOKS INC.

Fig. 94-1

Circuit Notes

The meter will show volume and tone control balance between left and right stereo amplifiers. For maximum convenience the meter is a zero-center type. Resistors are five percent or better and the diodes a matched pair. Optimum stereo level and phase balance occurs for matched speakers when the meter indicates zero. If the meter indicates either side of zero, the levels are not matched or the wires are incorrectly phased. Check phasing by making certain the meter leads are connected to the amplifier hot terminals and the common leads go to ground.

STEREO BALANCE METER

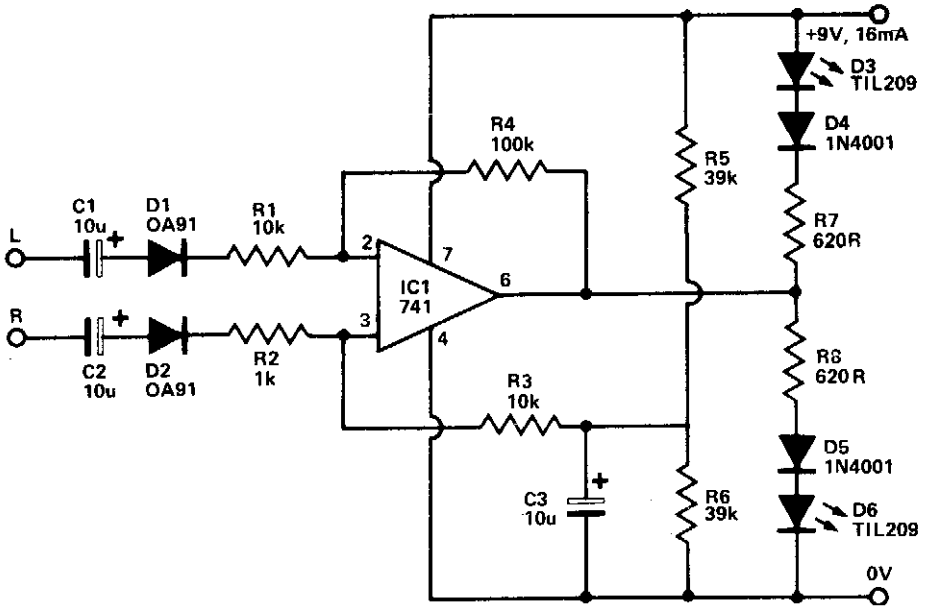

ELECTRONICS TODAY INTERNATIONAL

Fig. 94-2

Circuit Notes

To use the indicator, switch the amplifier to mono mode and adjust the balance control until both LEDs are equally illuminated. The amplifier is now in perfect stereo mode balance.

95
Strobe Circuits

The sources of the following circuits are contained in the Sources section beginning on page 694. The figure number contained in the box of each circuit correlates to the source entry in the Sources section.

Simple Strobe
Safety Flare
Disco-Strobe Light

SIMPLE STROBE

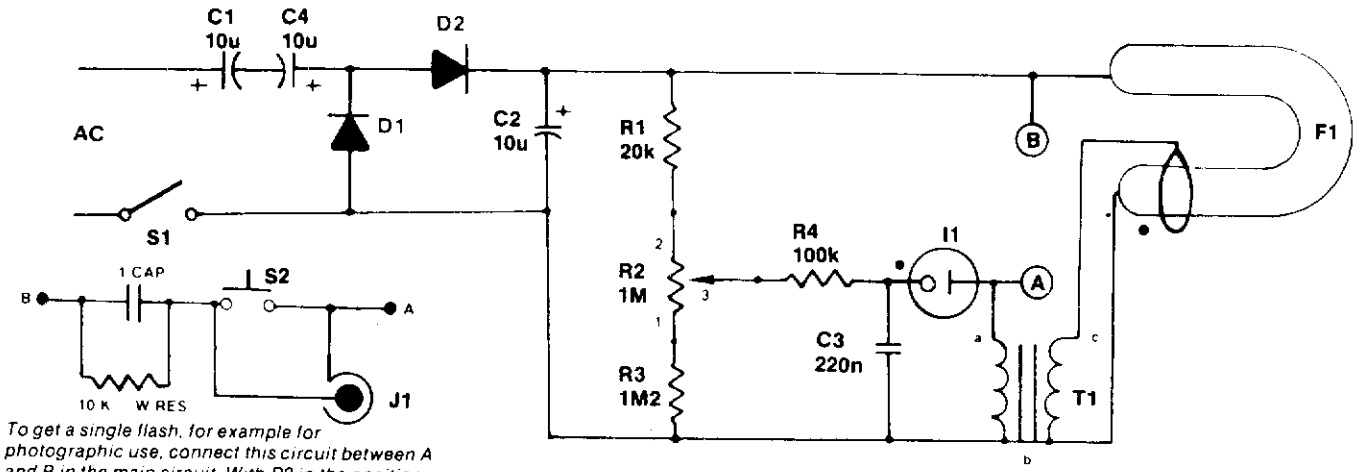

To get a single flash, for example for photographic use, connect this circuit between A and B in the main circuit. With R2 in the position for slowest flash rate (ie no flashes!) S2 will provide the desired single flash. Alternatively J1 can be used to allow the camera's flash contacts to trigger the strobe.

ELECTRONICS TODAY INTERNATIONAL

Fig. 95-1

Circuit Notes

Initially the neon and xenon lamps are not conducting and act like a very high (almost infinite) resistance. Capacitors C1 and C4 in conjunction with D1 and D2 form a voltage doubler circuit, which can charge C2 up to about 300 Vdc after several ac cycles. Voltage increases as current is supplied through R1 and R2. Neon bulb I1 will all of a sudden start to conduct when the voltage across C3 reaches I1's ionization potential. While conducting, the resistance of the bulb will be relative low. Due to this sudden conduction, a pulse of current will pass through the primary of T1. The turns ratio is such that about 400 V will be developed at the secondary. The xenon tube is similar to the neon bulb in that it produces light when the gas ionizes and conducts. However, it is designed so that an external signal (the 4 kV on the metal ring around the tube) ionizes the gas and initiates the conduction. When F1 conducts, it discharges C2. At this point, the whole cycle starts over again. The purpose of R2 is to vary the rate at which C3 charges, and hence the repetition rate of the strobe.

SAFETY FLARE

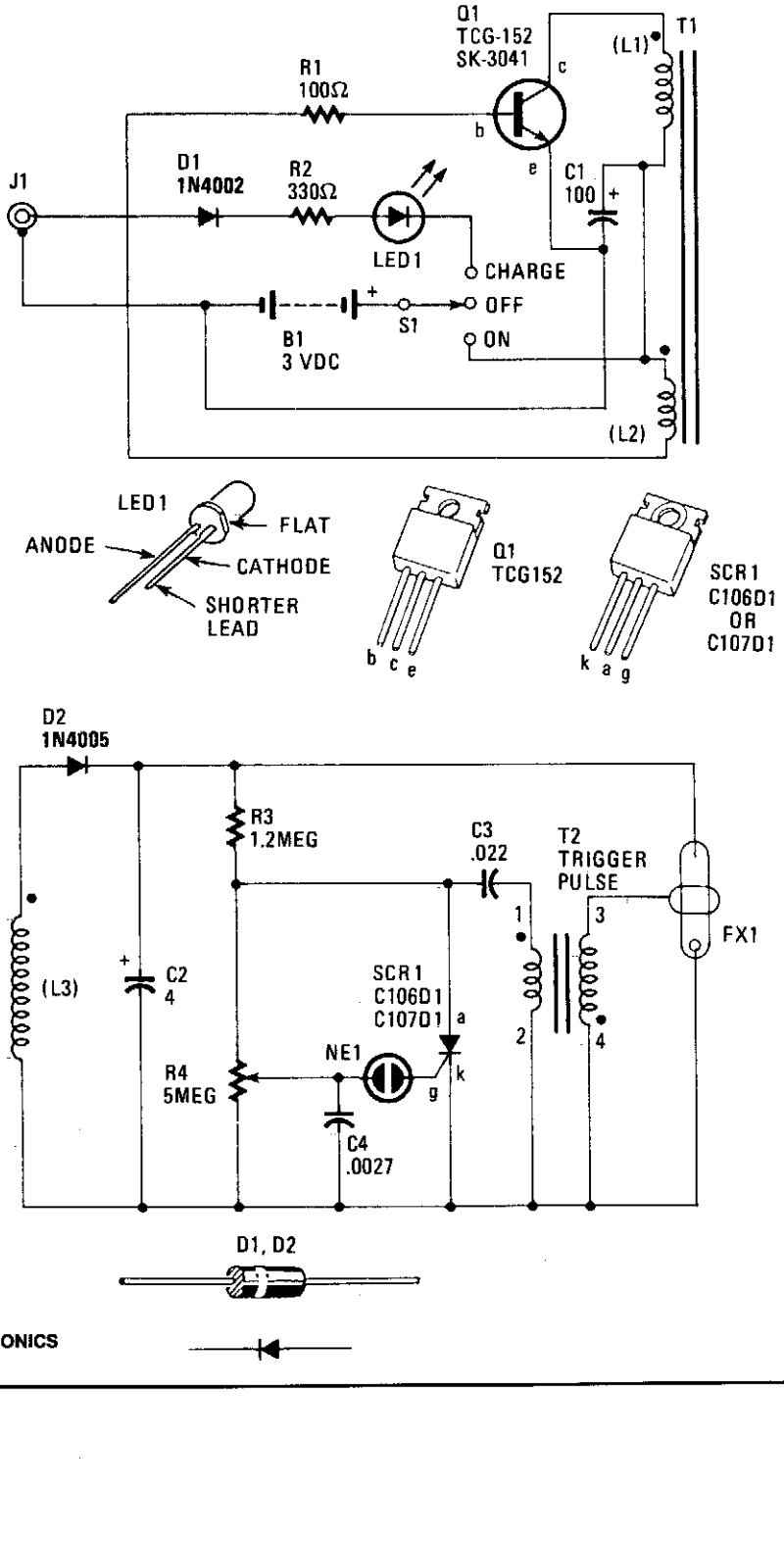

HANDS-ON ELECTRONICS

Fig. 95-2

Circuit Notes

When S1 is on, power is applied to an oscillator composed of Q1, R1, C1, L1, and L2. Coil L1 is the primary winding of T1, and L2 is the feedback winding. When Q1 turns on, its collector current saturates T1's ferrite core. That, in turn, removes the base drive to Q1 through L2. Transistor Q1 then turns off. As the field around L1 and L2 decays, Q1 will eventually turn on again, and the cycle repeats over, and over. Transformer T1 is a step-up, ferrite-core, potted-type unit whose secondary-winding (L3) output is rectified by D2 and filtered by C2. That capacitor charges up to around 250 to 300 volts, which is applied to the resistor divider composed of R3 and R4, along with the flash tube FX1. Capacitors C3 and C4 will charge up to around 200 and 100 volts, through R3 and R4, respectively. Flash rate is adjustable via R4. When the charge on C4 gets to around 100 volts, neon lamp NE1 fires discharging C4 into the gate circuit of silicon control rectifier SCR1. The SCR1 turns on discharging C3 into the primary winding of trigger-pulse transformer T2. Transformer T2 is another step-up, pulse-type unit providing an output of around 4 kW across transformer T2's secondary winding. The xenon gas inside FX1 is ionized and a bright flash is emitted. Finally, C3 quickly discharges through L4, and the cycle repeats over, and over.

DISCO-STROBE LIGHT

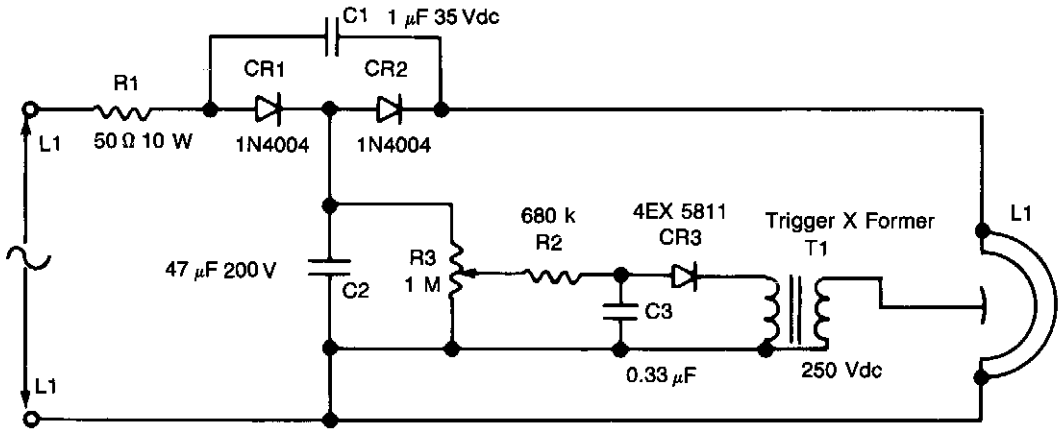

WILLIAM SHEETS

Fig. 95-3

Circuit Notes

This circuit uses a voltage doubler CR1 and CR2 to obtain about 280 V dc across C1. C2 and R3 form a voltage divider to obtain a dc voltage to change C3 thru R2. When CR3 fires, a high voltage is generated in T1, firing L1.

96
Switch Circuits

The sources of the following circuits are contained in the Sources section beginning on page 694. The figure number contained in the box of each circuit correlates to the source entry in the Sources section.

Solid State Stepping Switch
AC-Static SPDT Switch

SOLID STATE STEPPING SWITCH

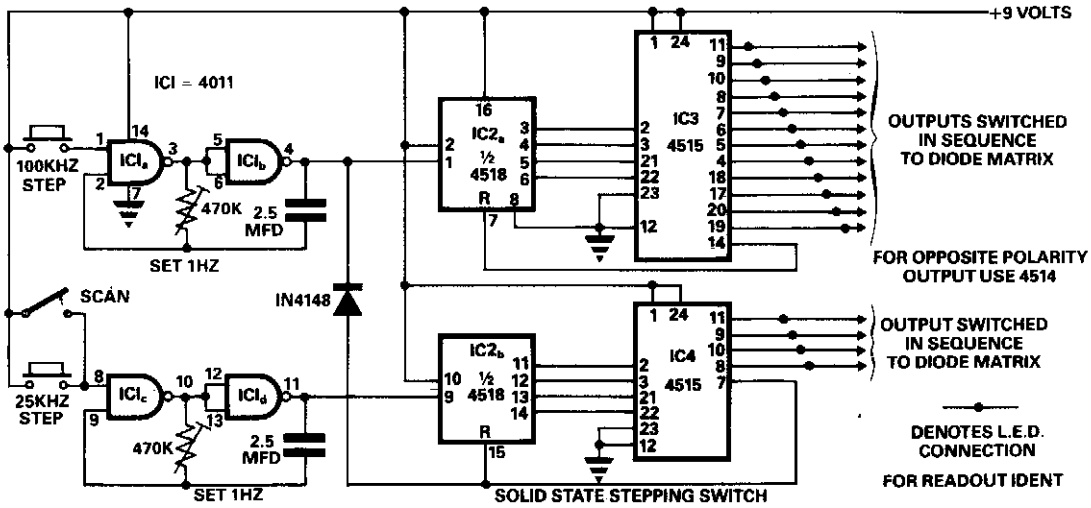

ELECTRONIC ENGINEERING

Fig. 96-1

Circuit Notes

This circuit was designed to make switching of a 48-channel mobile transceiver safe to operate while mobile. The oscillators allow for single-stepping or a scanning function. The scan facility allows for stepping through all 48 channels to check for occupancy or otherwise, and each output is indicated with an LED and labeled accordingly, so at-a-glance indication is possible. With full scope of this circuit it is possible to scan 256 channels and by adding more 4 to 16 line encoders etc. you could switch to any required number.

AC-STATIC SPDT SWITCH

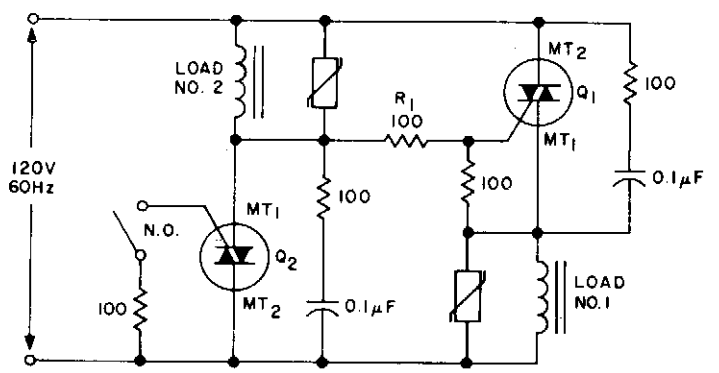

GENERAL ELECTRIC

Fig. 96-2

Circuit Notes

An SPDT solid state relay is shown. When voltage is applied Q1 will turn on, activating load #1, because the full line voltage appears across Q2, supplying gate current through R1. When S1 is closed, Q2 turns on removing the gate drive from Q1 and activating load #2.

97
Tape Recorder Circuits

The sources of the following circuits are contained in the Sources section beginning on page 694. The figure number contained in the box of each circuit correlates to the source entry in the Sources section.

Tape Recorder Interface
Tape Recorder Position Indicator/Controller

TAPE RECORDER INTERFACE

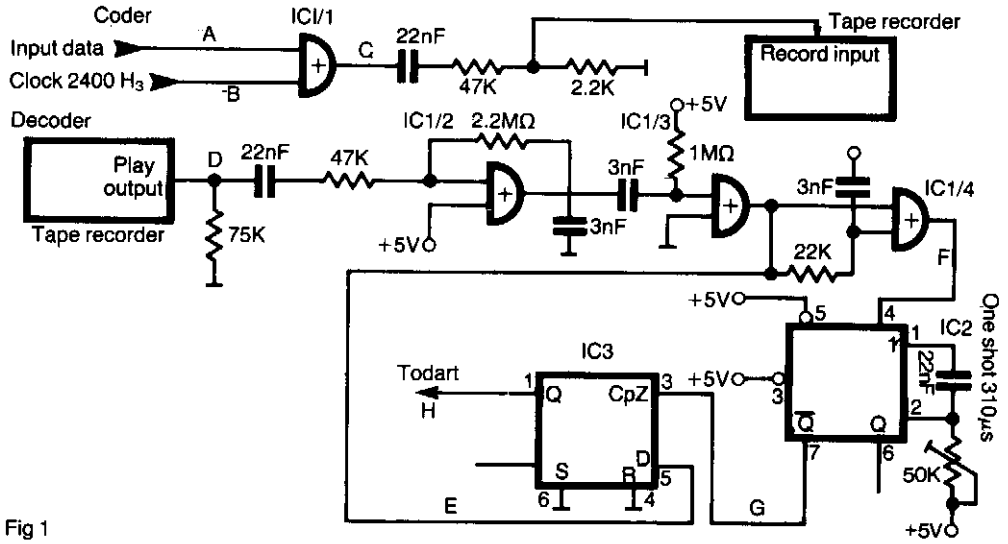

Fig 1

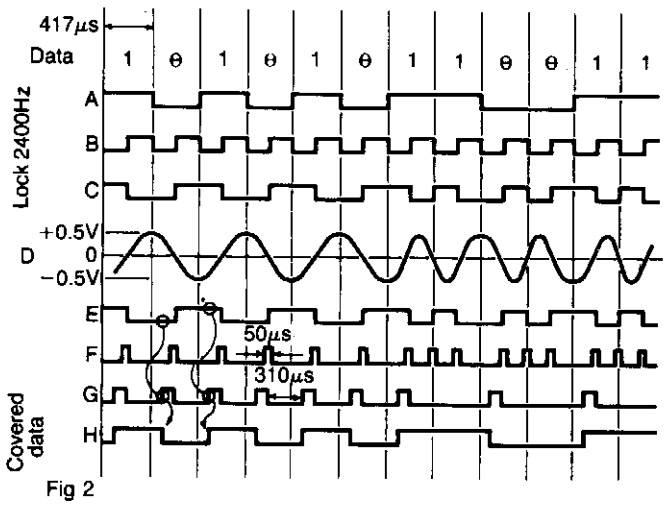

Fig 2

Fig. 97-1

Circuit Notes

The interface allows data to be saved on an ordinary tape recorder at a speed of 2400 bit/s.

The serial stream of data Fig. 1 (A) is coded with a clock of 2400 Hz (B), by means of XOR gate IC 1/1. Logical "high" and "low" appear as shown in Fig. 2 (C). These impulses are lowered in amplitude and feed into the record input of a low cost tape recorder.

TAPE RECORDER INTERFACE, Continued.

During the playback, pulses (D) are amplified with CMOS gate IC 1/2 connected as a linear amplifier, and providing a TTL level signal shown in (E). On both positive and negative transitions IC 1/4 forms short pulses as shown in (F) (approx. 50 μs) that triggers one shot IC2. A monostable one shot pulse width is adjusted to be ¾ of bit length (310 μs). A change from "high" to "low" in a coded stream generates a "low" pulse width of one bit cell. The same is for change from "low" to "high" that generates a "high" pulse of the same width. During this pulse one shot latches the state of line E in D type flip-flop IC3 (G). When a stream consists of multiple "ones" or "zeros," the one shot is retriggered before it comes to the end of the quasistable state and the state of the flip-flop remains unchanged. The original data stream is available at the output of the flip-flop (H). Z80 the DUART that receives these pulses is programmed so that the receiver clock is 16 times the data rate (38.4 kHz).

TAPE RECORDER POSITION INDICATOR/CONTROLLER

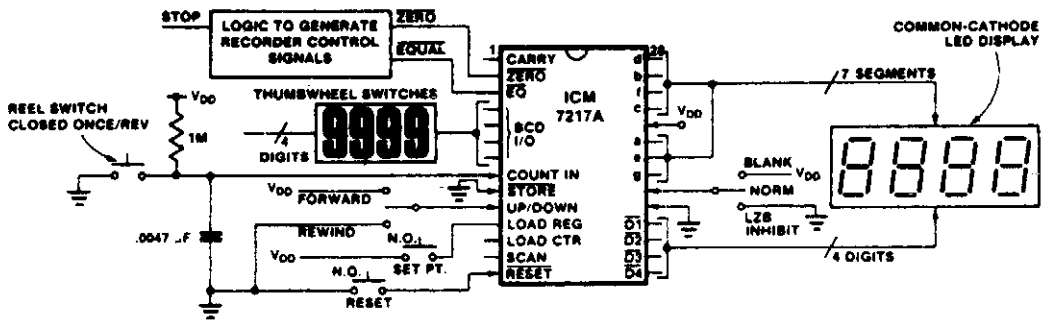

INTERSIL

Fig. 97-2

Circuit Notes

This circuit is representative of the many applications of up/down counting in monitoring dimensional position. In the tape recorder application, the LOAD REGISTER, EQUAL, and ZERO outputs are used to control the recorder. To make the recorder stop at a particular point on the tape, the register can be set with the stop at a particular point on the tape, the register can be set with the stop point and the EQUAL output used to stop the recorder either on fast forward, play or rewind.

To make the recorder stop before the tape comes free of the reel on rewind, a leader should be used. Resetting the counter at the starting point of the tape, a few feet from the end of the leader, allows the ZERO output to be used to stop the recorder on rewind, leaving the leader on the reel. The 1 M ohm resistor and .0047 μF capacitor on the COUNT INPUT provide a time constant of about 5 ms to debounce the reel switch. The Schmitt trigger on the COUNT INPUT of the ICM7217 squares up the signal before applying it to the counter. This technique may be used to debounce switchclosure inputs in other applications.

98
Telephone-Related Circuits

The sources of the following circuits are contained in the Sources section beginning on page 694. The figure number contained in the box of each circuit correlates to the source entry in the Sources section.

Speech Activity Detector for Telephone Lines
Scramble Phone
Musical Telephone Ringer
Dual Tone Decoding
Automatic Telephone Recording Device
Telephone Ringing Detector, Frequency and Volume Controlled
Music on Hold
Circuit Monitors Blinking Phone Lights
Phone Light
High Isolation Telephone Ringer
Remote Telephone Monitor
Plug-In Remote Telephone Ringer
Telephone Hold Button
Telephone Blinker
Telephone "In Use" Indicator
Tone Ringer
Tone Ringer II
Speakerphone
Speech Network
Programmable Multi-Tone Telephone Ringer

SPEECH ACTIVITY DETECTOR FOR TELEPHONE LINES

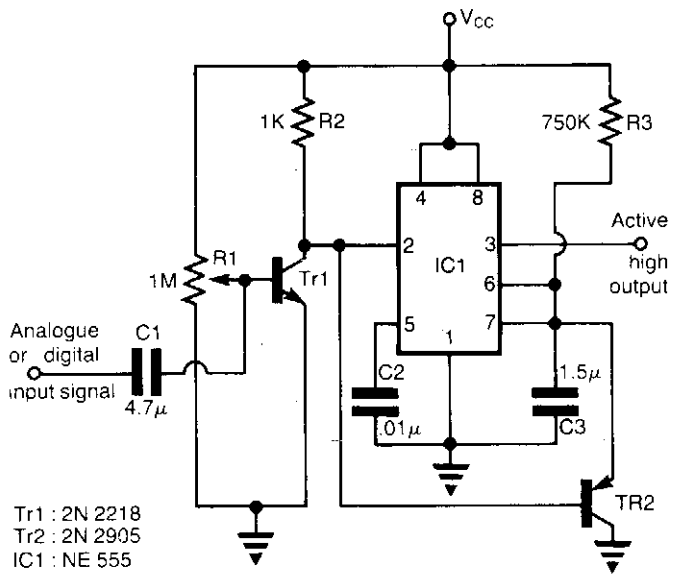

ELECTRONIC ENGINEERING *Fig. 98-1*

Circuit Notes

The circuit can be used in telephone lines for speech activity detection purposes. This detection is very useful in the case of half-duplex conversation between two stations, in the case of simultaneous transmission of voice and data over the same pair of cables by the method of interspersion data on voice traffic, and also in echo suppressor devices. The circuit consists of a class-A amplifier in order to amplify the weak analog signals (in the range 25-400 mW of an analog telephone line).

The IC1 is connected as a retriggerable monostable multivibrator with the Tr2 discharging the timing capacitor C3, if the pulse train reaches the trigger input 2 of IC1 with period less than the time:

$$T_{high} = 1.1\ (R3\ C3)$$

The output 3 of IC1 is active ON when an analog or digital signal is presented at the output and it drops to low level, T_{high} seconds after the input signal has ceased to exist.

SCRAMBLE PHONE

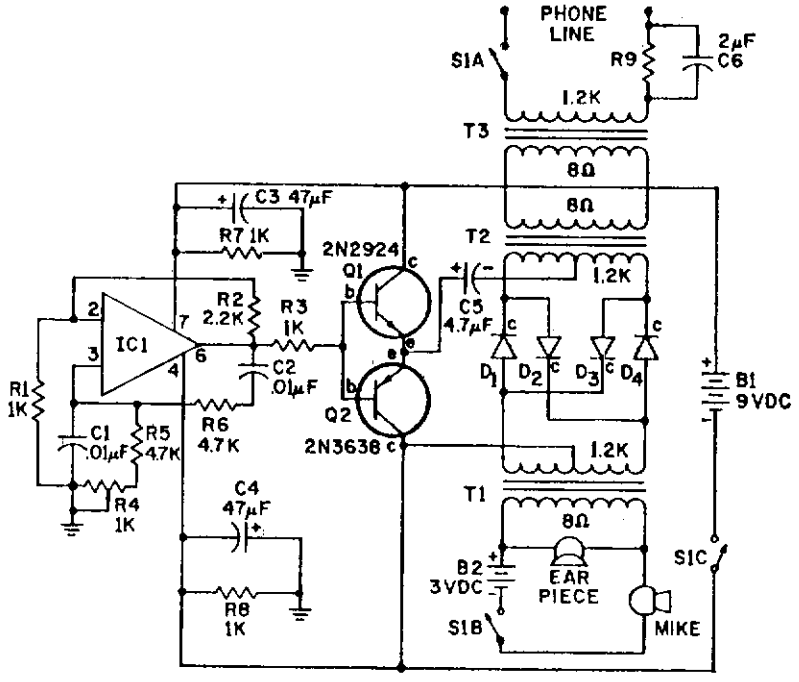

B1—9-volt battery, Eveready 216 or equiv.
B2—3-volt battery, two AA penlight cells in series
C1, C2—0.01 uF polystyrene capacitor, 100 VDC or better
C3, C4—47 uF electrolytic capacitor, 25 VDC or better
C5—4.7 uF electrolytic capacitor, 25 VDC or better
C6—2 uF paper or mylar capacitor, 50 VDC or better
D1 to D4—Diode, IN914, HEP-156
IC1—Integrated circuit, Signetics N5741K or equiv.
Q1—NPN transistor, 2N2924, HEP-724
Q2—PNP transistor, 2N3638, HEP-716
R1, R3, R7, R8—1000-ohm, ½-watt resistor
R2—2,200-ohm ½-watt resistor
R4—1000-ohm potentiometer
R5, R6—4,700-ohm, ½-watt resistor
R9—Limit line current to 25mA (see text)
S1A, S1B, S1C—Phone hook switch (see text)
T1 to T3—Small transistor audio transformer; 8-ohm primary, 1,200-ohm center taped secondary.
Misc.—Surplus telephone (see Lafayette, Radio Shack, EDI, BA catalogs), battery holders, hardware, knob, wire, solder, etc.

TAB BOOKS, INC.

Fig. 98-2

Circuit Notes

IC-1 and the associated circuitry form a stable audio tone generator that feeds a buffer amplifier, Q1 and Q2. The tone output is taken from the emitters of the transistor pair to supply a carrier voltage for a balanced modulator made up of four diodes—D1 through D4—and T1 and T2. If the two transformers and the four diodes are perfectly matched (which is almost impossible to achieve and not necessary in any case) no carrier will appear at the input or output of T1 or T2. In a practical circuit, a small amount of unbalance will occur and produce a low-level carrier tone at the input and output of the balanced modulator. A telephone carbon mike and earpiece are connected to the low impedance winding of T1, with a three volt battery supplying the necessary mike current. Trim potentiometer R4 is used to make a fine frequency adjustment of the oscillator so that two scrambler units may be synchronized to the same carrier frequency. Rg limits line current to 25 mA.

MUSICAL TELEPHONE RINGER

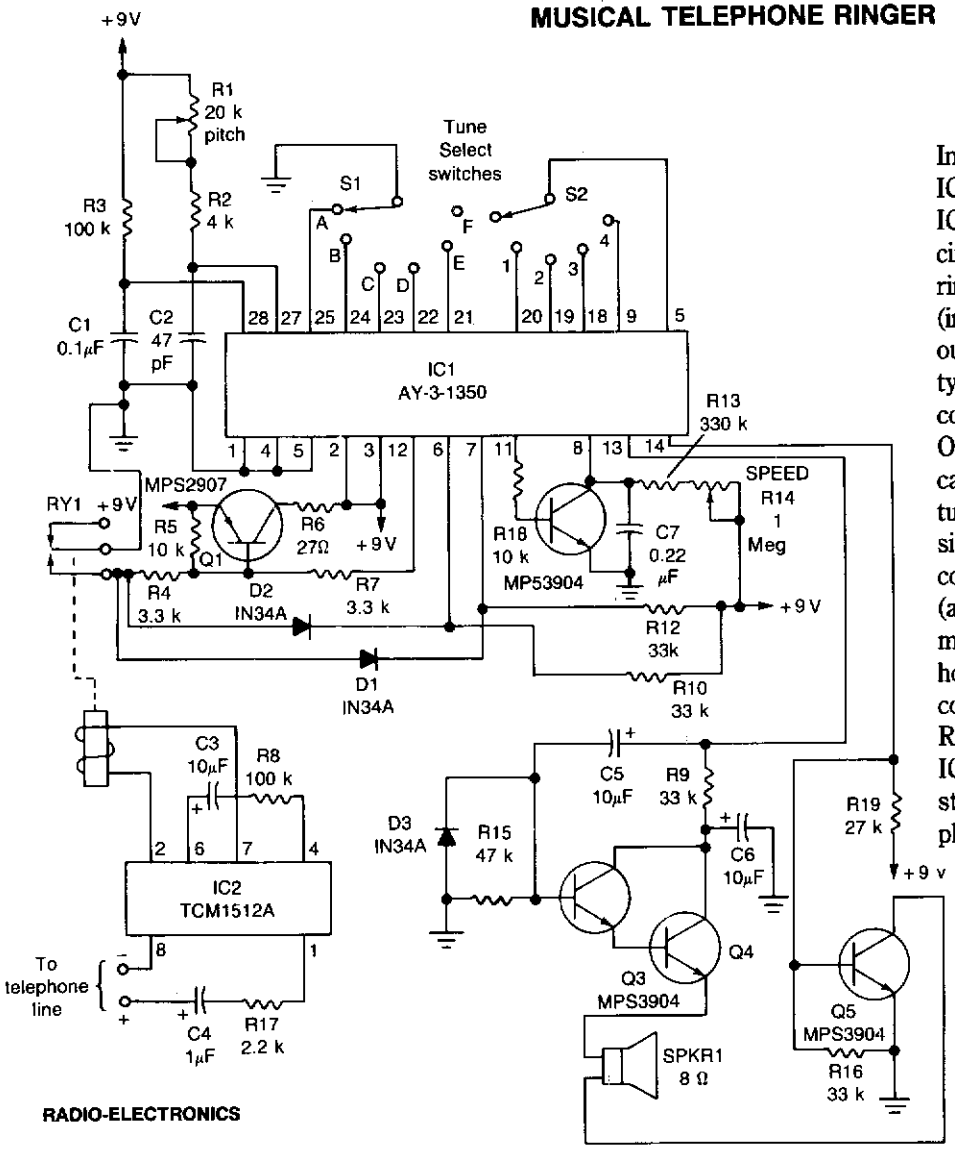

Circuit Notes

The heart of the circuit is IC1, General Instrument's AY-3-1350 melody-synthesizer IC. IC2 is a TCM1512 telephone ring detector IC that is powered by the telephone line. The circuit's operation begins when IC2 senses a ring pulse on the telephone line. The detector (internally) rectifies the ring signal and then outputs a voltage to relay RY1 (an SPST reed-type relay with 5 volt contacts), causing its contacts to close. That pulls pin 12 (the ON/OFF control) of IC1 low (logic "0"), causing it to output a signal—the selected tune—to transistor amplifier Q2. The amplified signal is then fed to the speaker. The melody continues to play either until the tune is finished (at which time IC1 returns to the standby mode), or until someone takes the phone off the hook. Taking the phone off the hook discontinues the ring pulses to IC2, which opens RY1. When the relay contacts open, pin 12 of IC1 goes high, returning the circuit to the standby mode to wait for the next incoming phone call.

RADIO-ELECTRONICS

Fig. 98-3

DUAL TONE DECODING

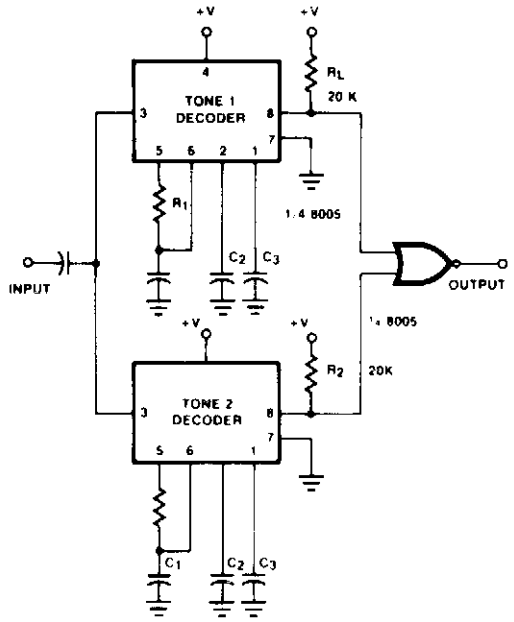

Figure 1A. Detection of Two Simultaneous or Sequential Tones

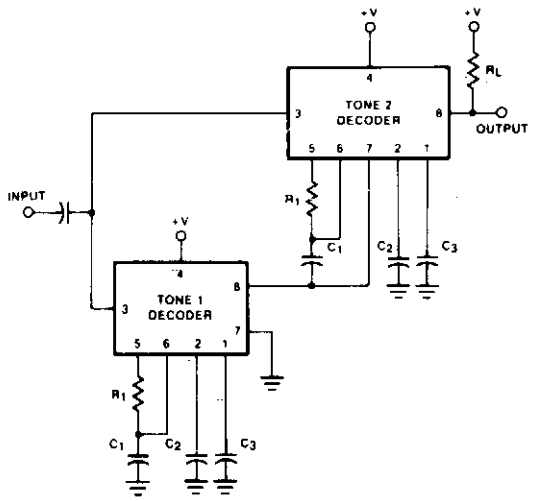

Figure 1C

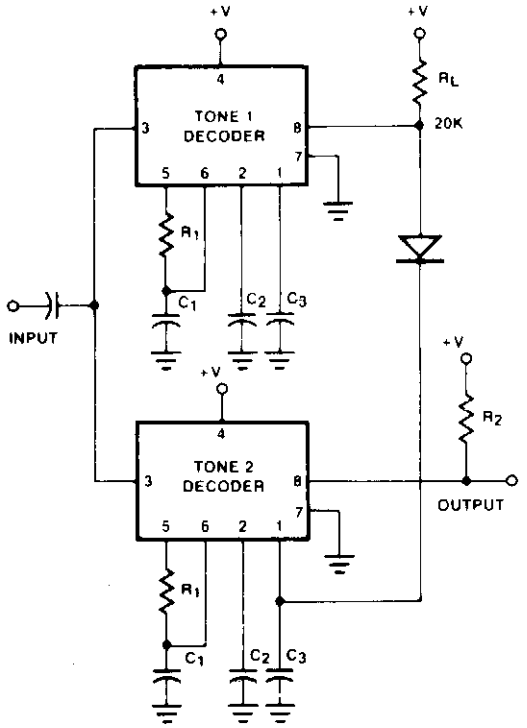

Figure 1B

EXAR

Fig. 98-4

Circuit Notes

Two integrated tone decoders, XR-567 units, can be connected (as shown in Fig. 1A) to permit decoding of simultaneous or sequential tones. Both units must be on before an output is given. R1C1 and R'1C'1 are chosen, respectively, for Tones 1 and 2. If sequential tones (1 followed by 2) are to be decoded, then C3 is made very large to delay turn-off of Unit 1 until Unit 2 has turned on and the NOR gate is activated. Note that the wrong sequence (2 followed by 1) will not provide an output since Unit 2 will turn off before Unit 1 comes on. Figure 1B shows a circuit variation which eliminates the NOR gate. The output is taken from Unit 2, but the Unit 2 output stage is biased off by R2 and CR1 until activated by Tone 1. A further variation is given in Fig. 1C. Here, Unit 2 is turned on by the Unit 1 output when Tone 1 appears, reducing the standby power to half. Thus, when Unit 2 is on, Tone 1 is or was present. If Tone 2 is now present, Unit 2 comes on also and an output is given. Since a transient output pulse may appear at Unit 1 turn-on, even if Tone 2 is not present, the load must be slow in response to avoid a false output due to Tone 1 alone. The XR-267 Dual Tone Decoder can replace two integrated tone decoders in this application.

AUTOMATIC TELEPHONE RECORDING DEVICE

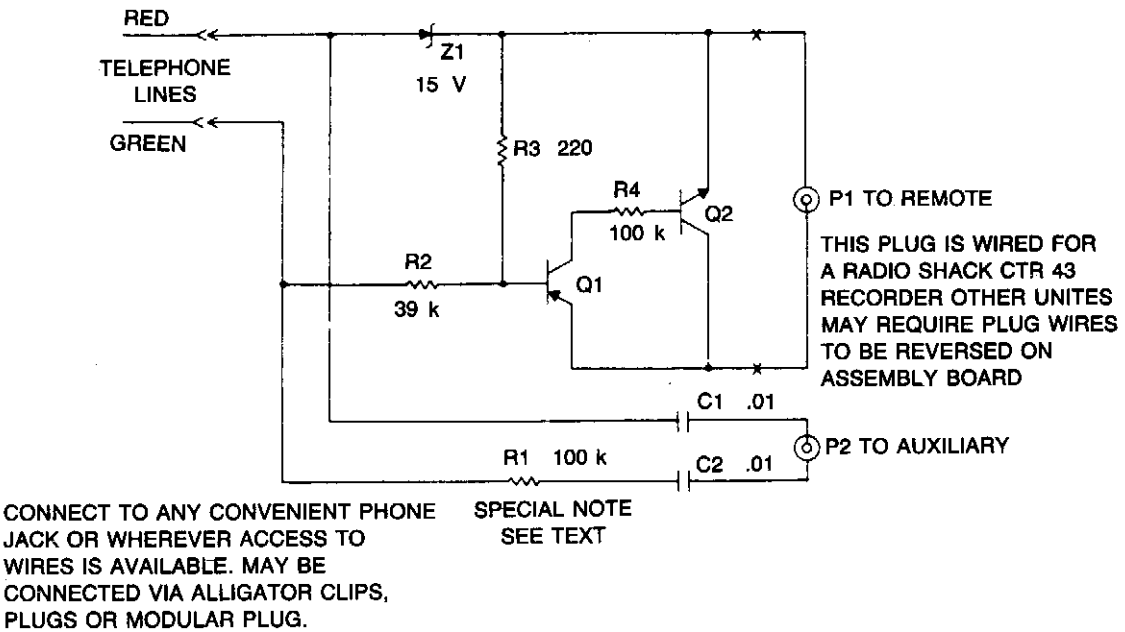

TAB BOOKS, INC.

Fig. 98-5

Circuit Notes

The device is a dc switch that is normally on via the forward biasing of Q1 via R3. Q1 now clamps Q2 into a forward state by biasing its complement well into a saturated state via R4. The dc switch is turned off via a negative voltage above that of the zener (D1). This voltage is usually about 48 and is the on-hook value of the phone line. This negative voltage overrides the effect of R3 and keeps the circuit "off." When the phone is off the hook, the 48 volts drops to 10 volts, that is below the zener voltage of D1 and R3 now turns the circuit on. The audio signal is via attenuator resistor R1 and dc isolating capacitors C1, C2. The device is a high impedance switch that isolates the recording controlled device from the phone line via some relatively simple electronic circuitry. It requires no battery and obtains power for operating via the remote jack that in most recorders is a source of 6 volts. When clamped to ground it initiates recorder operation. The unit interfaces with most portable cassette recorders providing they contain a remote control jack.

TELEPHONE RINGING DETECTOR, FREQUENCY AND VOLUME CONTROLLED

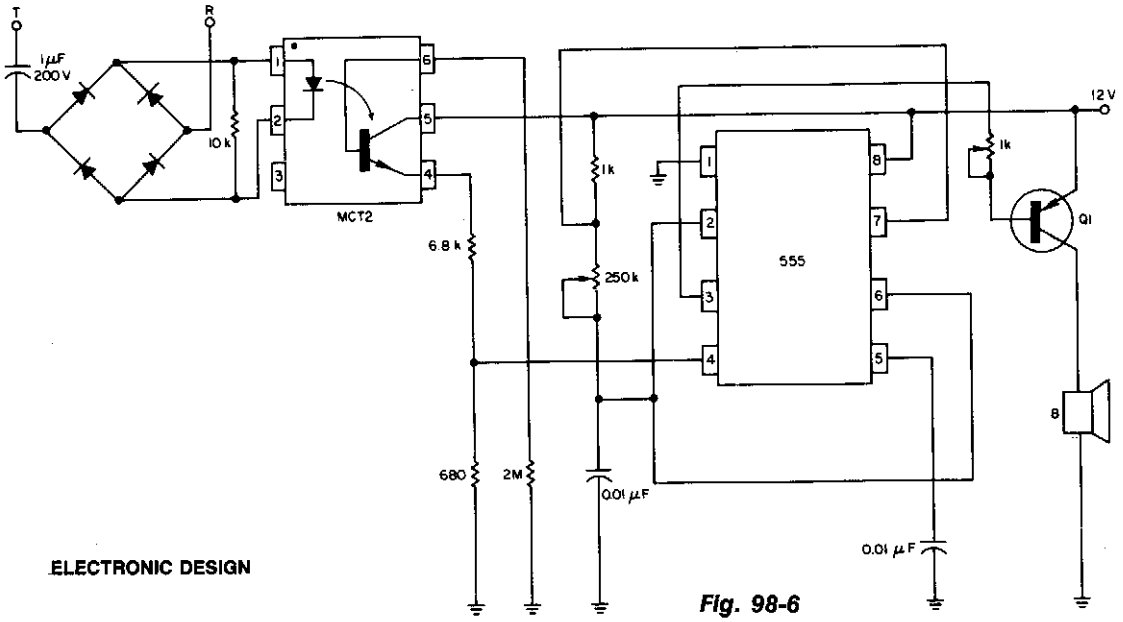

ELECTRONIC DESIGN

Fig. 98-6

Circuit Notes

With the 555 timer connected as a multivibrator and an opto-isolator, a remote speaker can be driven.

MUSIC ON HOLD

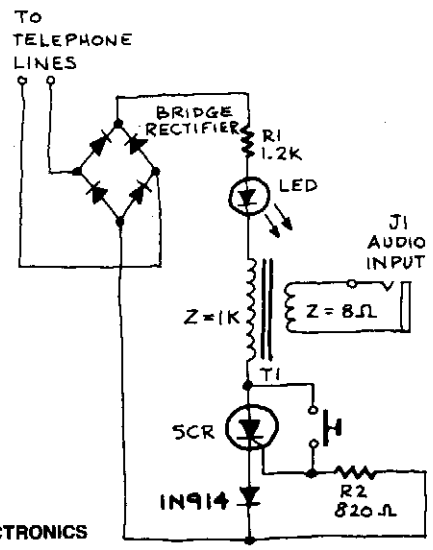

RADIO-ELECTRONICS

Fig. 98-7

Circuit Notes

With this music-on-hold device, you can answer the phone in one room, place the caller on hold, and then pick up the phone again at another location. When you pick up the phone the second time, you automatically deactivate the music-on-hold feature and can continue your conversation.

CIRCUIT MONITORS BLINKING PHONE LIGHTS

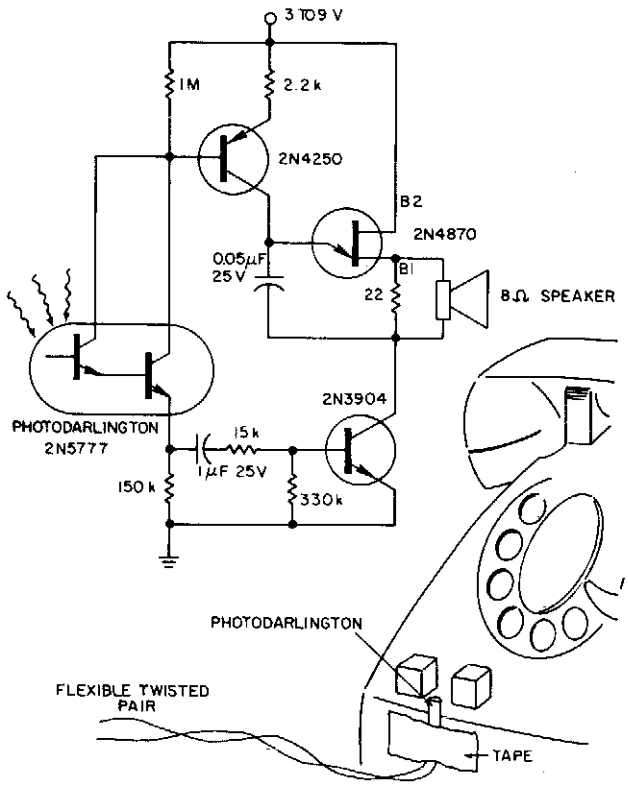

Fig. 98-8

ELECTRONIC DESIGN

Circuit Notes

A 2N5777 photo-Darlington cell picks up blinking light from the transparent plastic buttons. The power is switched ON and OFF by a hi-beta 2N3904 transistor. The circuit's 9 V battery can be left continuously connected. Less than a micro-ampere is drawn—even with normal, office ambient light and the phone lights not flashing. For noisy locations, the tone can be made louder with an output transformer (ratio of 250:8) or a 100 ohm speaker that replaces the 22 ohm resistor in the output.

PHONE LIGHT

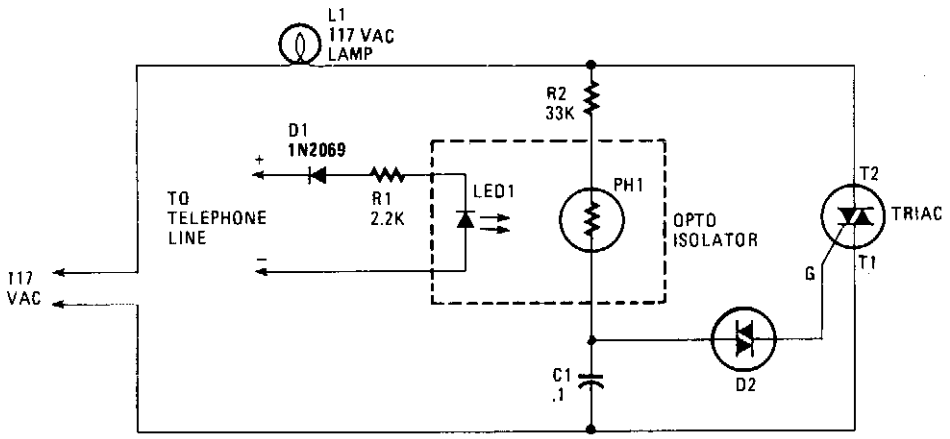

HANDS-ON ELECTRONICS

Fig. 98-9

Circuit Notes

When the phone does ring the triac is triggered into conduction by a signal applied to its gate (G) through a bilateral switch (diac), D2. The triac acts as a switch, conducting only when a signal is present at the gate.

HIGH ISOLATION TELEPHONE RINGER

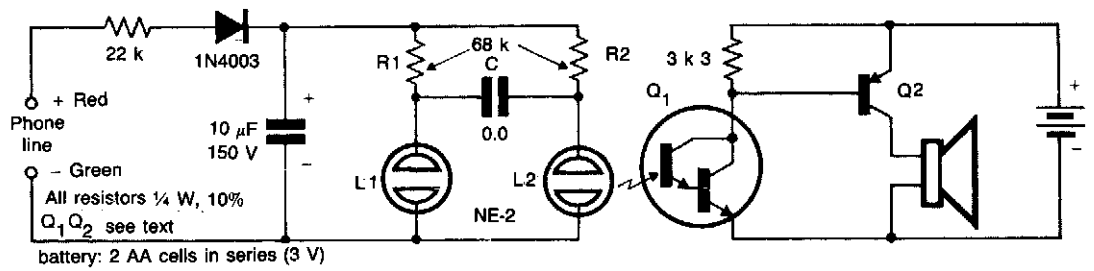

ELECTRONIC ENGINEERING

Fig. 98-10

Circuit Notes

The diode rectifies the ringing signal to supply the operating power to the audio relaxation oscillator made up of L1, L2, R1, R2, and C. Moreover, L2 together with Q1 acts as an opto-isolator, totally isolating the telephone line from the rest of the circuit. The oscillator audio frequency is optically coupled to the photo-Darlington which drives Q2 and thus the speaker. The 10 μF capacitor is not large enough to smooth the ringing ripple completely. This results in frequency modulation of the audio oscillator giving it an attention-getting warble.

REMOTE TELEPHONE MONITOR

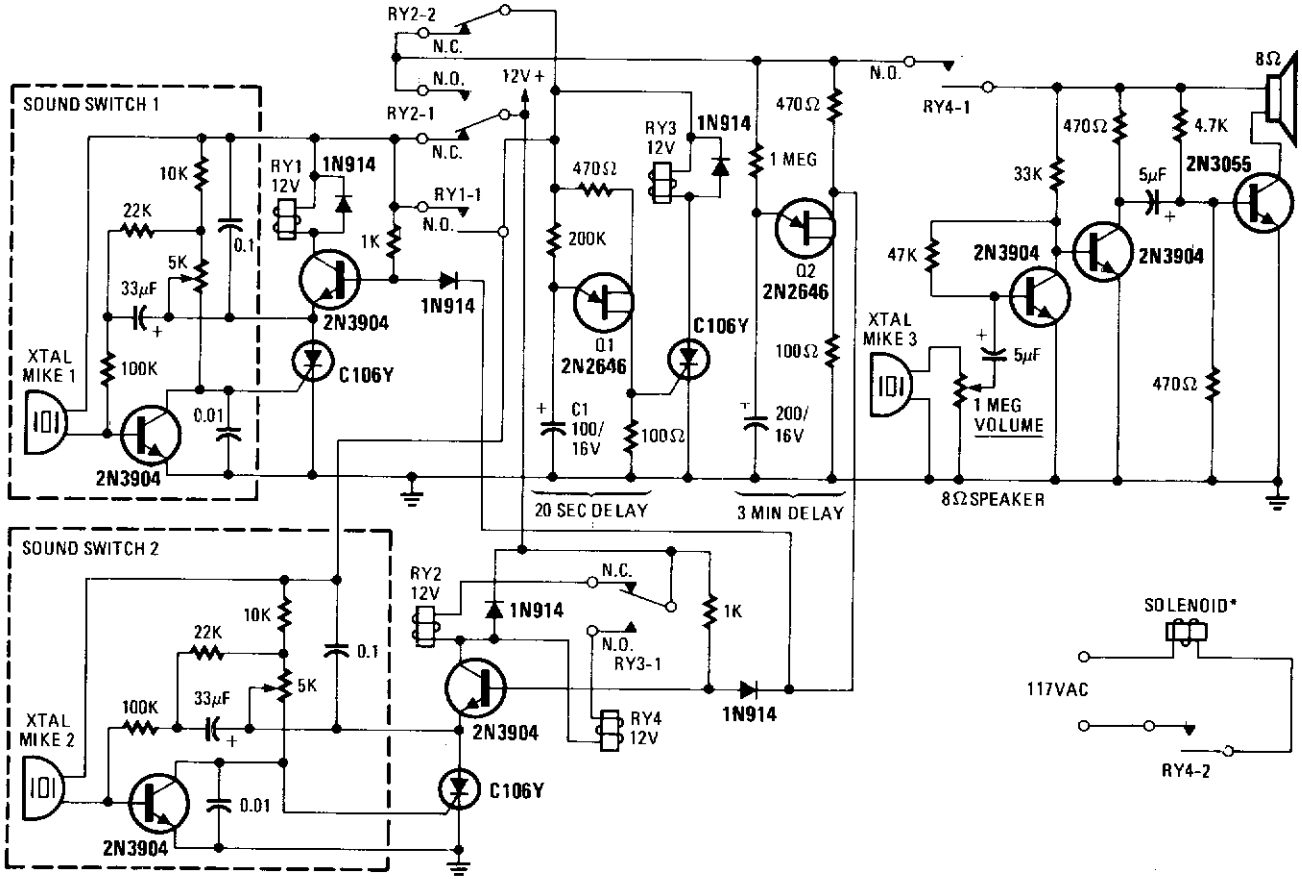

RADIO-ELECTRONICS

Fig. 98-11

Circuit Notes

This device monitors sounds in home or office when a telephone is called from a remote location.

PLUG-IN REMOTE TELEPHONE RINGER

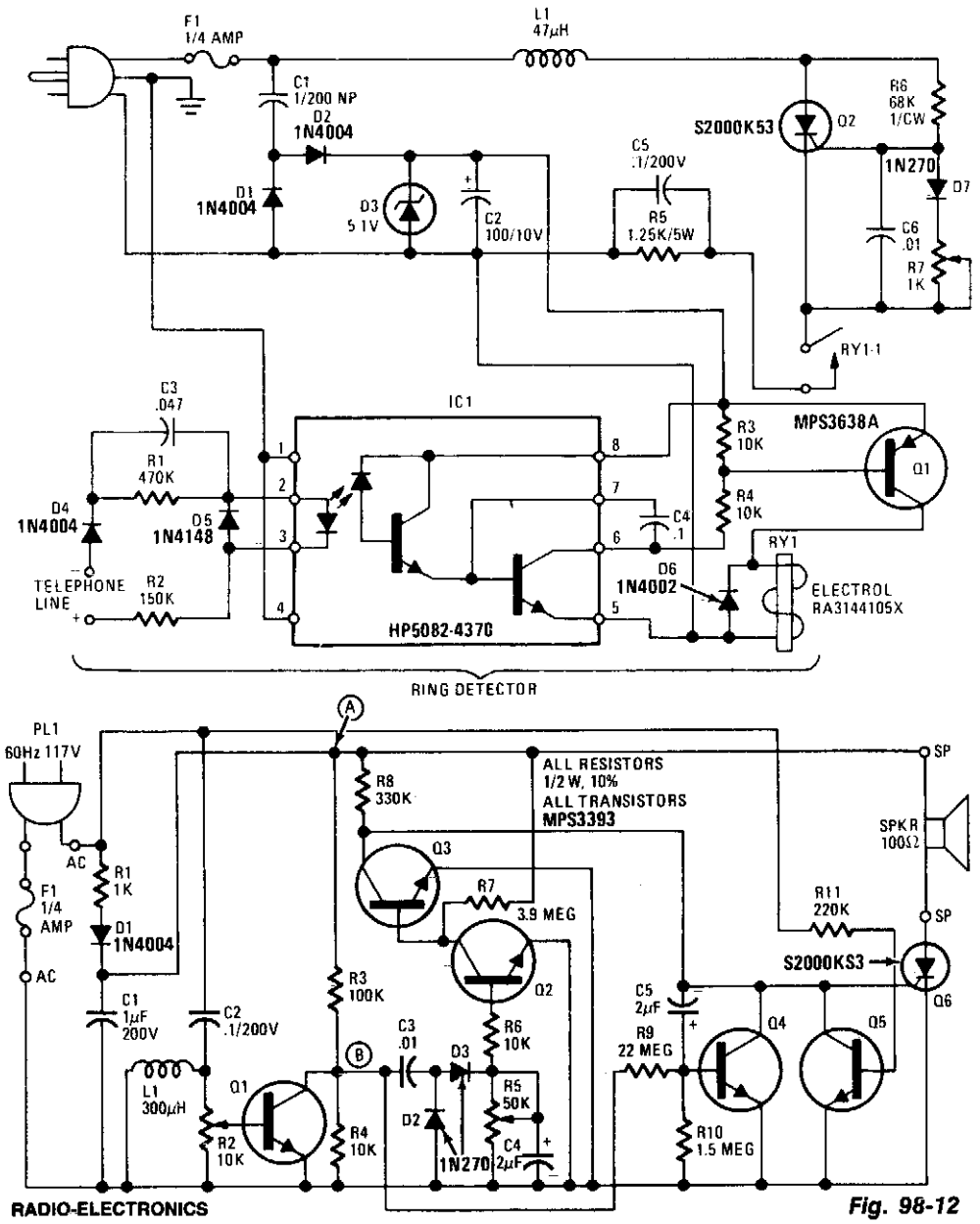

RADIO-ELECTRONICS

Fig. 98-12

Circuit Notes

This device consists of a ring detector connected to the telephone line. When the telephone rings, the ring detector impresses high-frequency pulses on the ac power line. A receiver placed anywhere on the same power line detects these pulses and emits an audible tone in synchronization with the telephone signal.

TELEPHONE HOLD BUTTON

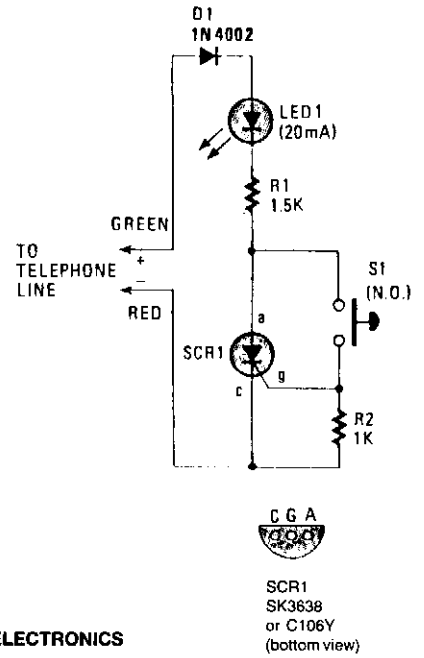

HANDS-ON ELECTRONICS

Fig. 98-13

Circuit Notes

The on-hook (no load) voltage across the red-green wires will be 48 V or slightly less when all telephones are on-hook (disconnected). When any telephone goes off-hook the load current flowing in the telephone causes the voltage to fall below 5 volts dc. Although the telephone hold is connected across the red-green wires, silicon control rectifier SCR1 is open; so there is no current path across the telephone line. To hold the call, depress normally-open switch S1 and hang up the telephone (still depressing S1). When the phone goes on-hook the red-green voltage jumps to 48 volts dc. Since switch S1 is closed, a positive voltage is applied to SCR1's gate, which causes SCR1 to conduct, thereby completing the circuit across the telephone line through D1, LED1, R1, and SCR1. The current that flows through those components also causes the LED to light up—indicating that the telephone line is being held. The effective load across the red-green wires is the 1500 ohm value of R1, which is sufficient to seize the line while limiting the current through the LED to a safe value. When the telephone, or an extension, is once again placed off-hook the red-green voltage falls to 5 volts or less. But diode D1 has a normal voltage drop—called the breakover voltage—of 0.7 volts, and the LED has a forward drop of 2.0 volts. Excluding the voltage drop across R1 there is a maximum of 2.3 volts available for SCR1, which is too low to maintain conduction; so SCR1 automatically opens the hold circuit when any telephone goes off-hook.

TELEPHONE BLINKER

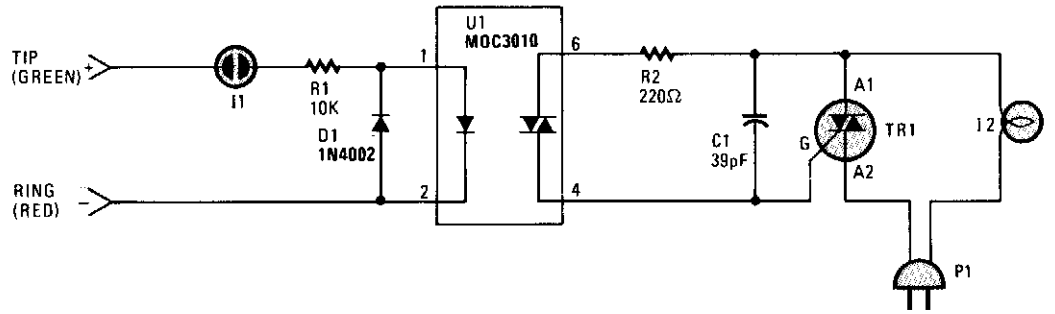

HANDS-ON ELECTRONICS

Fig. 98-14

Circuit Notes

A small neon lamp is triggered into conduction by the telephone's ringing voltage, passes just enough current to activate the LED in optocoupler U1, which in turn triggers the 6-A Triac that controls I2—a 117-Vac lamp or bell. (Capacitor C1 is necessary only when the circuit is used to drive a bell.) The lamp will flash off-and-on at the ringing rate, which is normally around 20 Hz. If a 117 Vac bell is used, connect it in place of the lamp.

TELEPHONE "IN USE" INDICATOR

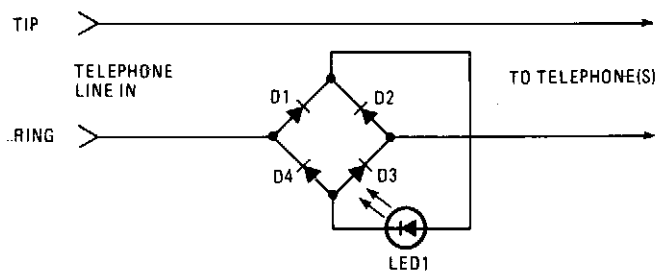

HANDS-ON ELECTRONICS

Fig. 98-15

Circuit Notes

This circuit functions as a line-current sensor and can be connected in series with either of the phone lines. For the circuit to indicate an "in use" status for all phones on a single line, it must be connected in series with the phone line before, or ahead of all phones on the line. Since the power for the circuit is supplied by the phone company, a circuit could be added to each phone as an off-hook indicator.

TONE RINGER

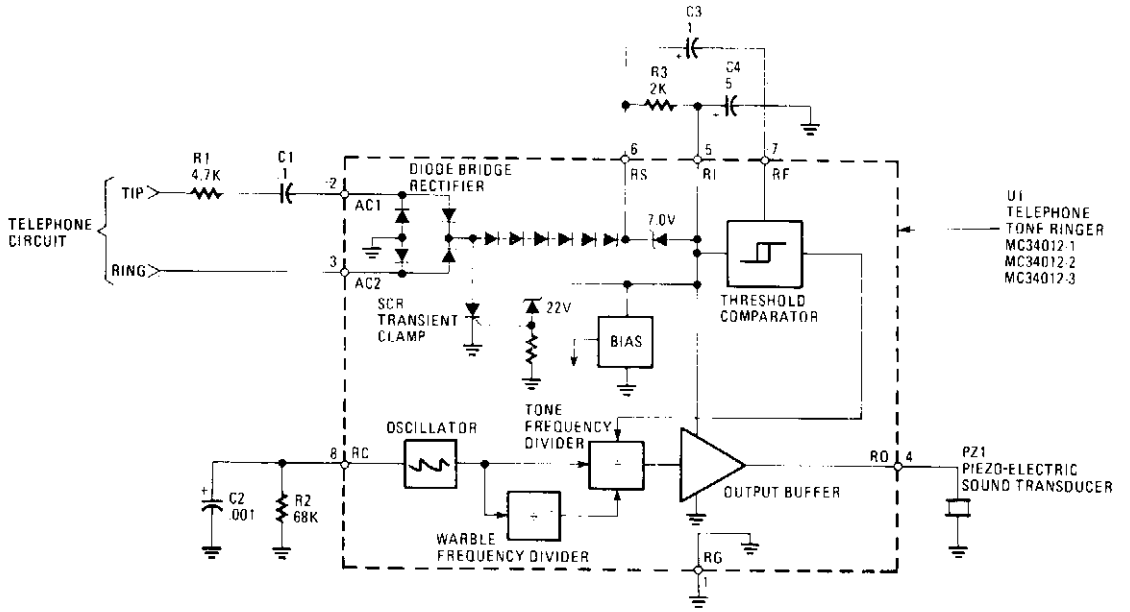

Fig. 98-16

Circuit Notes

The MC34012 tone-ringer chip derives its power by rectifying the ac ringing signal. That signal is normally at 20 Hz and measures between 70 and 130 volts rms. It uses that power for the tone generator and to drive the piezoelectric transducer. The sound that is produced is a warble that varies between two frequencies, $f_o/4$ (f_o – 4) $f_o/5$. The clock, or fundamental, frequency, f_o, is generated by a relaxation oscillator. That oscillator has R2 and C2 as its frequency setting components providing a selectable range of 1 kHz to 10 kHz. Selecting different values for R2 and/or C2 changes the clock frequency, which in turn varies the warble frequencies. The MC34012 chip comes in three different warble rates at which the warble frequencies ($f_o/4$, $f_o/5$) are varied. These warble rates are $f_o/320$, $f_o/640$, or $f_o/160$ and the different chips are designated as MC34012-1, -2, and -3, respectively. For example: with a 4.40 kHz oscillator frequency, the MC34012-1 produces 800 Hz and 1000 Hz tones with a 12.5 Hz warble rate. The MC34012-2 generates 1600 Hz and 2000 Hz tones with a similar 12.5 Hz warble frequency from an 8.0 kHz oscillator frequency. MC34012-3 will produce 400 Hz and 500 Hz tones with a 12.5 warble rate from a 2.0 kHz oscillator frequency.

TONE RINGER II

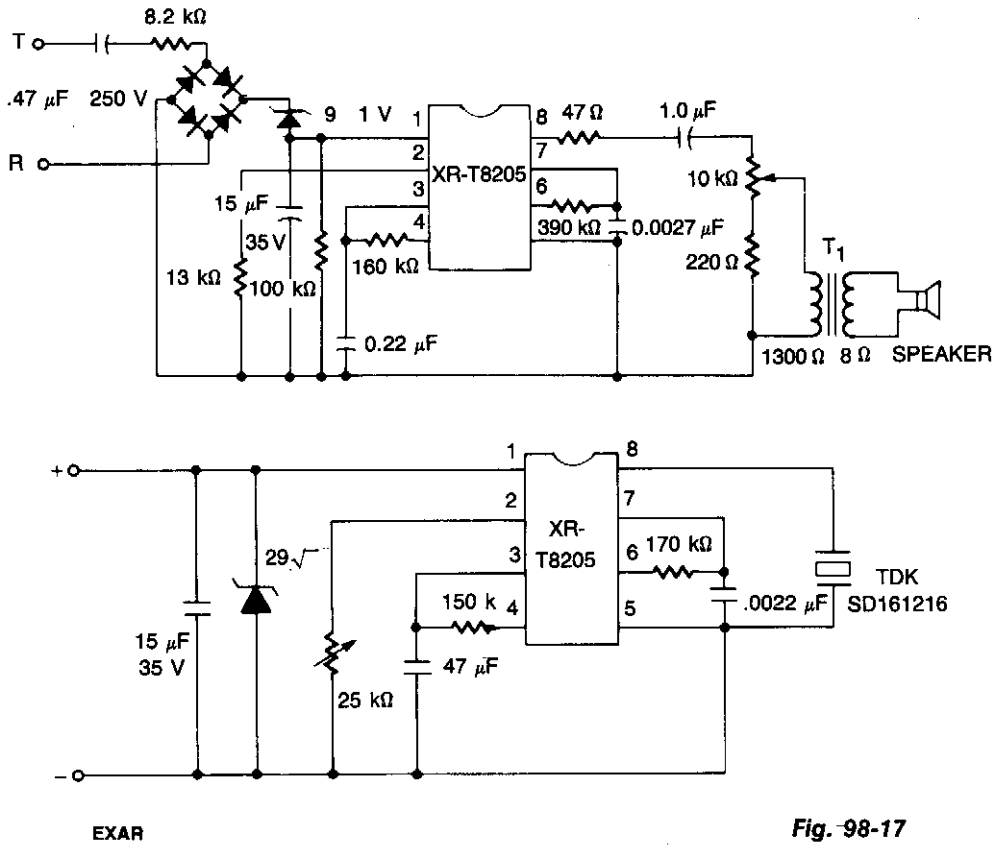

Fig. 98-17

Circuit Notes

The XR-T8205 Tone Ringer is primarily intended as a replacement for the mechanical telephone bell. The device can be powered directly from telephone ac ringing voltage or from a separate dc supply. An adjustable trigger level is provided with an external resistor. The circuit is designed for nominal 15 volt operation.

SPEAKERPHONE

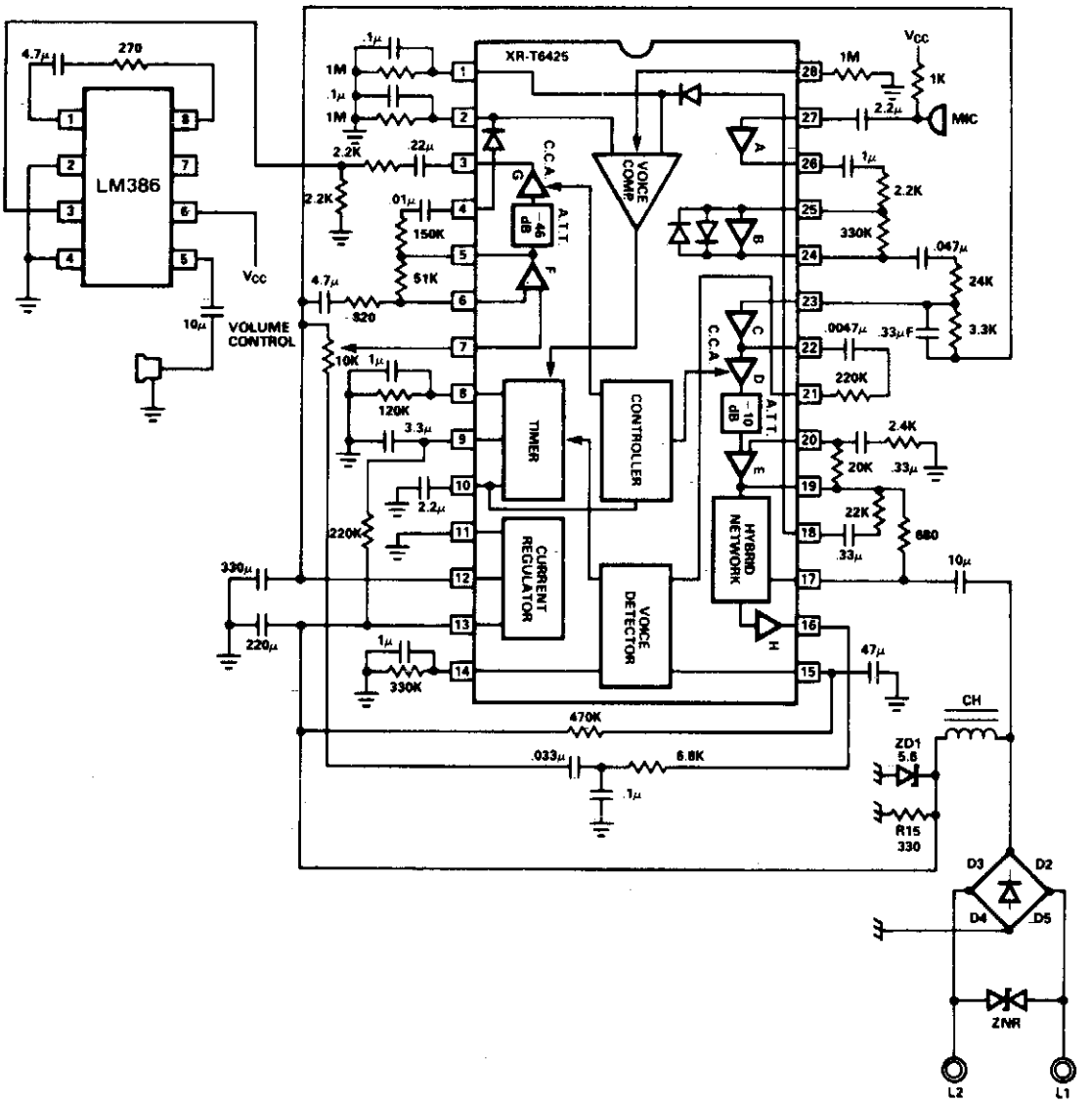

EXAR

Fig. 98-18

Circuit Notes

The XR-T6425 Speakerphone IC makes it possible to carry on conversation without using the handset, while the user is talking into a microphone and listening from a loudspeaker. It is ideal for hands-free conference calls. The XR-T6425 contains most of the circuits to eliminate singing and excessive background noise.

SPEECH NETWORK

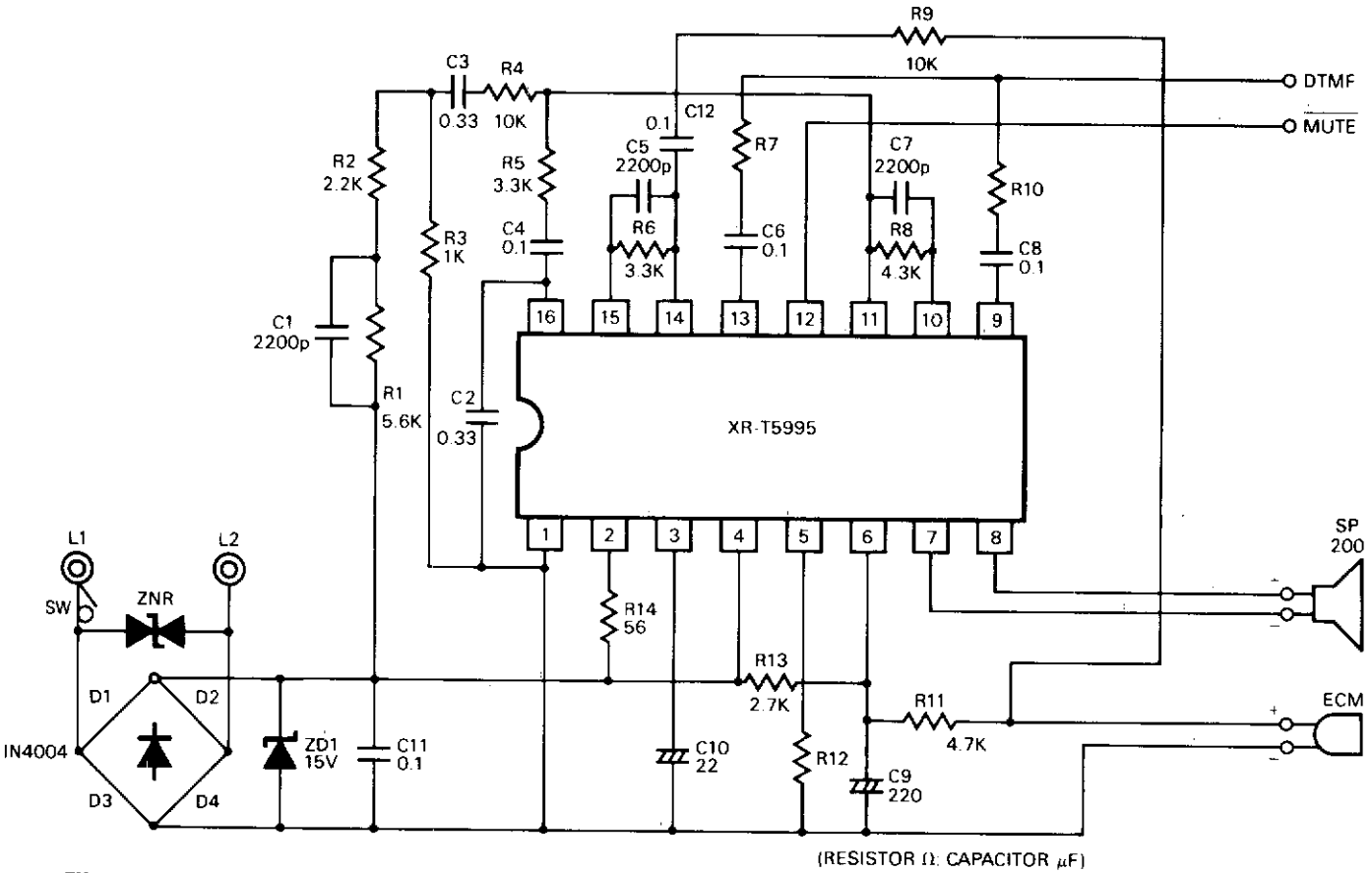

Fig. 98-19

Circuit Notes

The XR-T5995 Speech Network is a monolithic integrated circuit specifically designed for implementing a low cost telephone circuit. It is designed to use an electrodynamic microphone and electromagnetic receiver to replace a carbon microphone and telephone network hybrid.

PROGRAMMABLE MULTI-TONE TELEPHONE RINGER

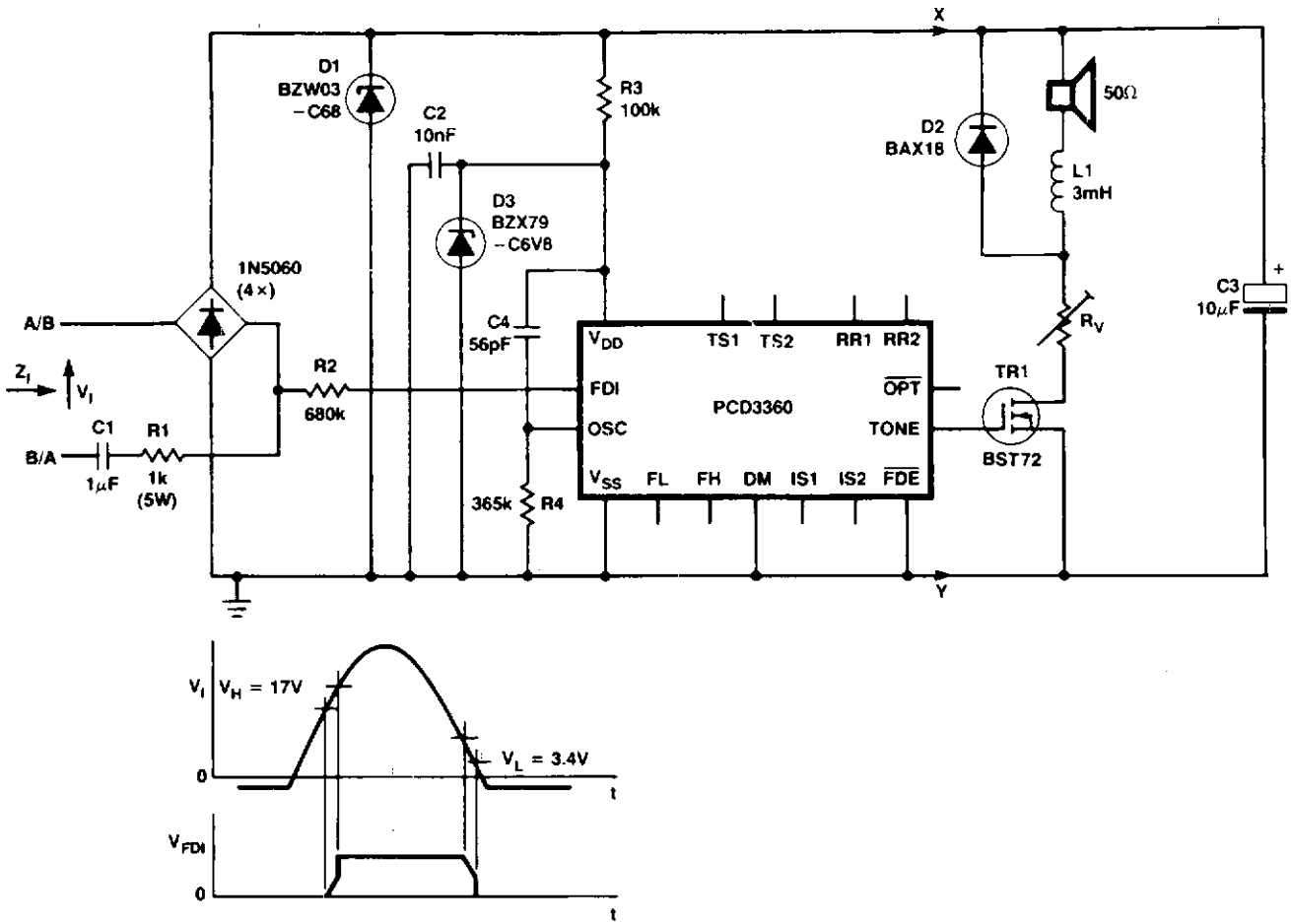

Transformerless Electronic Ringer With PCD3360 and a Loudspeaker

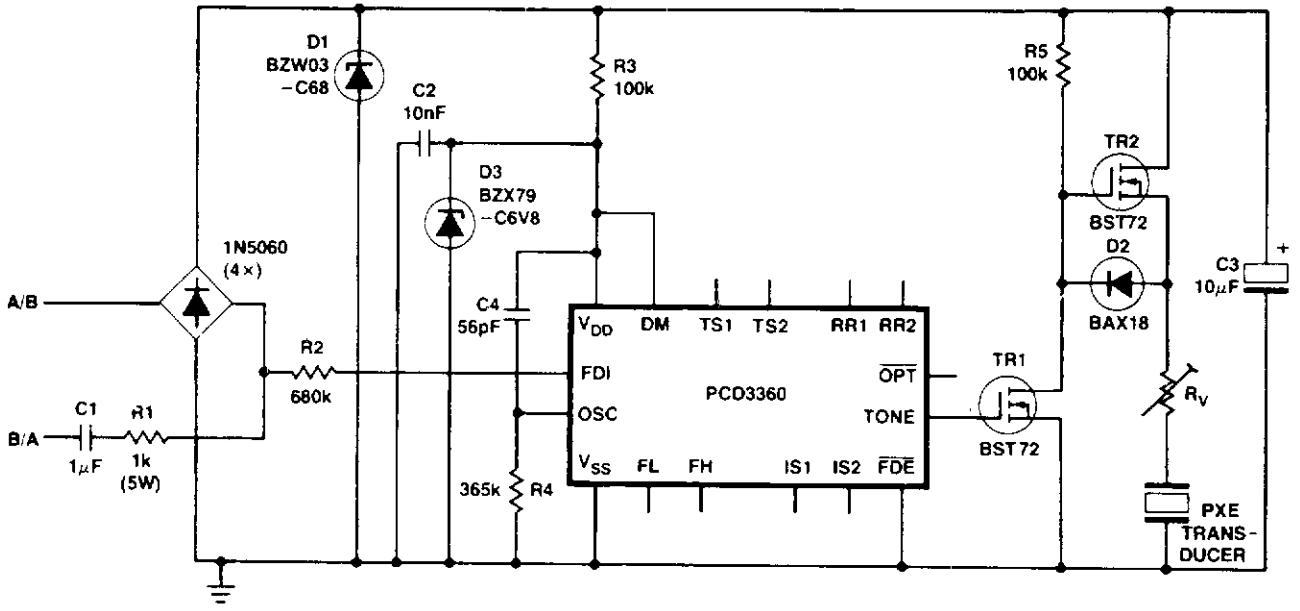

PCD3360 Ringer With PXE Transducer

SIGNETICS

Fig. 98-20

Circuit Notes

Two BST72 transistors provide an output voltage swing almost equal to the voltage at C3. Pins IS1 and IS2 are inoperative because DM = HIGH. Volume control is possible using resistor R_V.

99
Temperature Controls

The sources of the following circuits are contained in the Sources section beginning on page 694. The figure number contained in the box of each circuit correlates to the source entry in the Sources section.

Temperature-Controlling Circuit
Temperature Control
Low-Cost Temperature Controller
Precision, Linearized Platinum RTD Signal Conditioner
Low Power Zero Voltage Switch Temperature Controller
Heater Element Temperature Controller
Dual-Time Chip Controls Temperature While Monitoring Liquid Level
Temperature Alarm
Adjustable Threshold Temperature Alarm

TEMPERATURE-CONTROLLING CIRCUIT

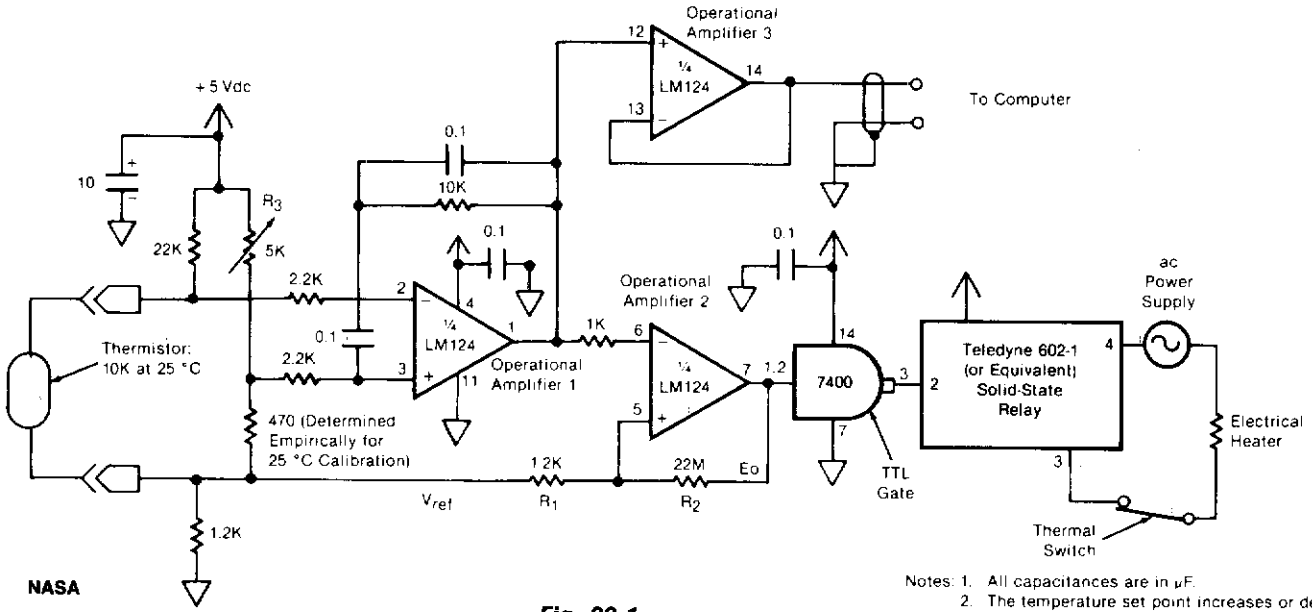

Notes: 1. All capacitances are in μF.
2. The temperature set point increases or decreases with R_3, which is set at 2.17K for 25 °C.
3. The upper and lower tripping voltages of operational amplifier 2 are given by $V_{trip} = V_{ref} \pm E_0 R_1/(R_1 + R_2)$, where V_{ref} = the reference voltage and E_0 = the output voltage of the operational amplifier

Fig. 99-1

Circuit Notes

The circuit switches the current to an electrical heater on and off to maintain the temperature of a room at 25 ±0.5°C. The temperature sensor is a thermistor which provides a differential input (for reduced noise) to an operational amplifier. A 5 kilohm potentiometer is used to adjust the set point through a voltage divider; a value of 2.17 kilohms yields the 25°C setting. A second operational amplifier is connected as an inverting differential-input comparator. The output of operational amplifier 2 controls the electrical heater through a zero-crossing solid-state relay. A transistor/transistor-logic (TTL) gate adjusts the output to the proper level for the relay. A thermal switch is placed in series with the heater and the ac supply for safety in case of thermal runaway. A third operational amplifier monitors the output of the thermistor, providing a signal to a computer for data logging.

TEMPERATURE CONTROL

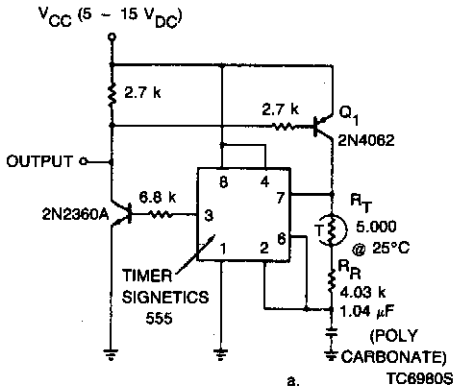

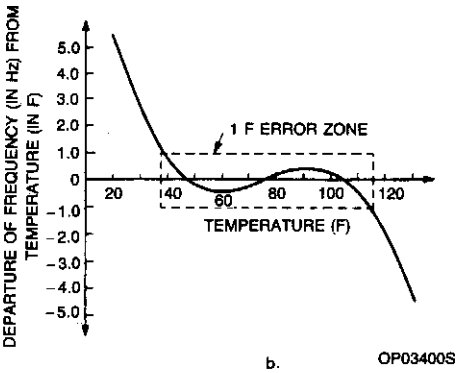

NOTE:
All resistor values are in ohms.

SIGNETICS

Fig. 99-2

Circuit Notes

A couple of transistors and a thermistor in the charging network of the 555 type timer enable this device to sense temperature and produce a corresponding frequency output. The circuit is accurate to within ±1 Hz over a 78°F temperature range.

LOW-COST TEMPERATURE CONTROLLER

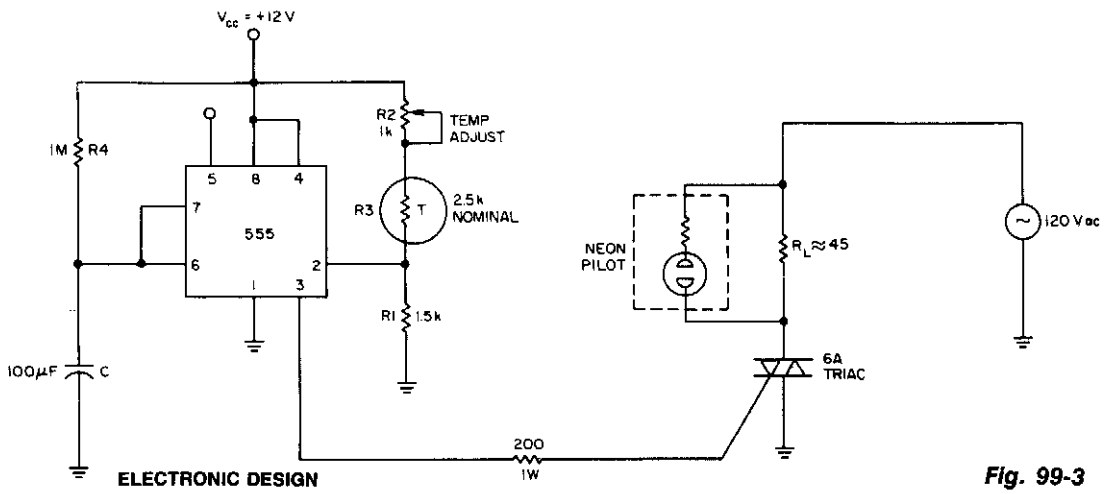

ELECTRONIC DESIGN

Fig. 99-3

Circuit Notes

The internal comparator of the 555 timer, combined with a thermistor, makes a low-cost temperature controller. Resistor R2 sets the temperature trip point.

PRECISION, LINEARIZED PLATINUM RTD SIGNAL CONDITIONER

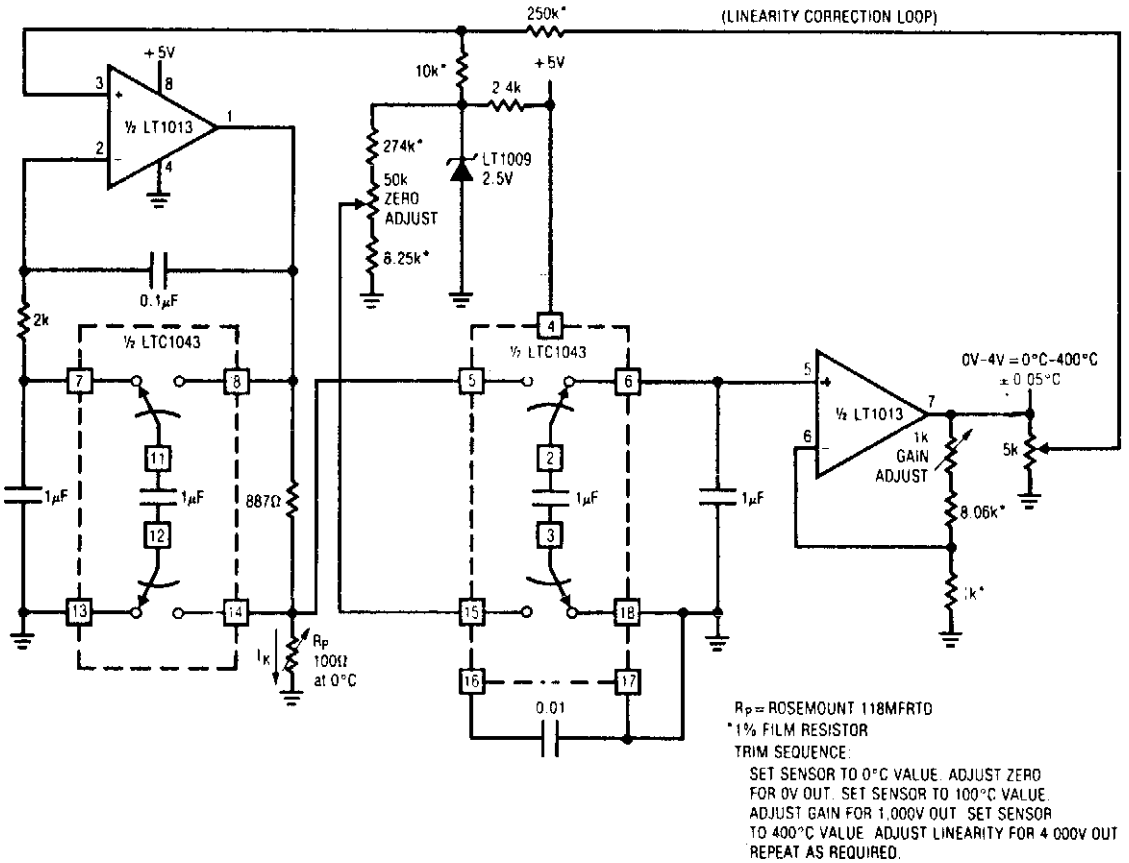

LINEAR TECHNOLOGY CORPORATION

Fig. 99-4

Circuit Notes

The circuit provides complete, linearized signal conditioning for a platinum RTD. This LTC1043 based circuit is considerably simpler than instrumentation or multi-amplifier based designs, and will operate form a single 5 V supply. A1 serves as a voltage-controlled ground referred current source by differentially sensing the voltage across the 998 phm feedback resistor. The LTC1043 section which does this presents a single-ended signal to A1's negative input, closing a loop. The 2 k 0.1 μF combination sets amplifier roll-off well below the LTC1043's switching frequency and the configuration is stable. Because A1's loop forces a fixed voltage across the 887 ohm resistor, the current through R_P is constant. A1's operating point is primarily fixed by the 2.5 V LT1009 voltage reference.

LOW POWER ZERO VOLTAGE SWITCH TEMPERATURE CONTROLLER

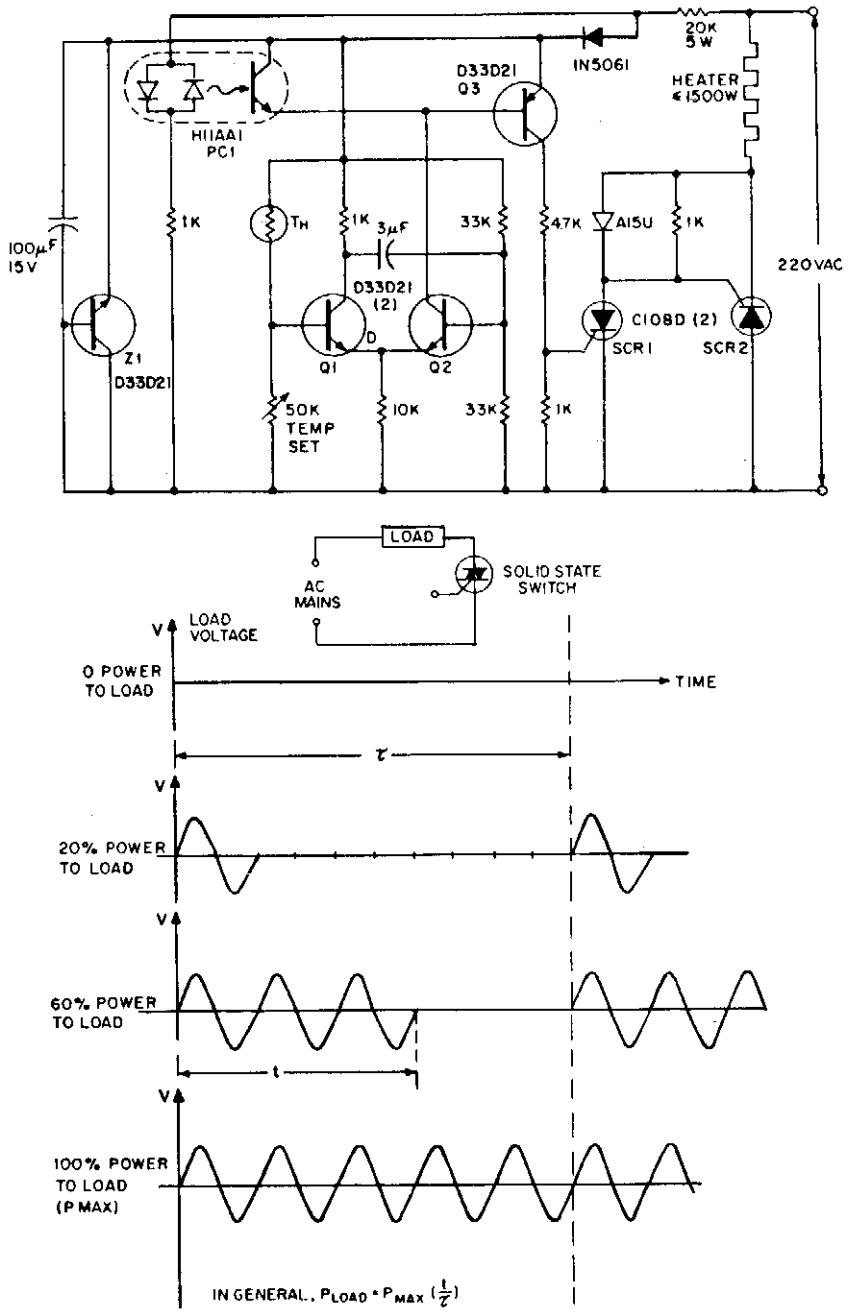

GENERAL ELECTRIC

Fig. 99-5

Circuit Notes

The "zero voltage switching" technique is widely used to modulate heating and similar types of ac loads where the time constant associated with the load (tens of seconds to minutes) is sufficiently long to allow smooth proportional modulation by time ratio control, using one complete cycle of the ac input voltage as the minimum switching movement. Despite its attractions, the traditional triac-based ZVS is virtually unusable for the control of very low power loads, especially from 220 volt ac inputs due to the triac's reluctance to latch-on into the near-zero instantaneous currents that flow through it and the load near the ac voltage zero crossover points. The circuit side-steps the latching problem by employing a pair of very sensitive low current reverse blocking thyristors (C106) connected in antiparallel; these are triggered by a simple thermistor modulated differential amplifier (Q1, Q2), with zero voltage logic furnished by an H11AA1 ac input optocoupler. With the NTC thermistor TH calling for heat, transistor Q1 is cut off and Q2 is on, which would normally provide continuous base drive to Q3, with consequent triggering of either SCR, or of SCR 2 via SCR1, depending on phasing of the ac input.

Note that when the ac input voltage is positive with respect to SCR 2, SCR 1 is reverse biased and, in the presence of "gate" current from Q3, behaves as a remote base transistor, whose output provides via blocking diode CR1, positive gate trigger current for SCR 2. When the ac input polarity is reversed (SCR 1's anode positive), SCR 1 behaves as a direct fired conventional thyristor. "Trigger" current to SCR 1, however, is not continuous, even when TH is calling for heat and Q2 is delivering base current to Q3. In this situation, Q3 is inhibited from conduction by the clamping action of PC1, an H11AA photocoupler, except during those brief instants when the ac input voltage is near zero and the coupler input diodes are deprived of current.

Triggering of either SCR can occur only at ac voltage crossing points, and RFI-less operation results. The proportional control feature is injected via the positive feedback action of capacitor CM, which converts the differential amplifier Q1, Q2 into a simple multivibrator, whose duty cycle varies from one to 99 percent according to the resistance of TH. Zener diode Z1 is operational, being preferred when maximum immunity from ac voltage induced temperature drift is desired.

HEATER ELEMENT TEMPERATURE CONTROLLER

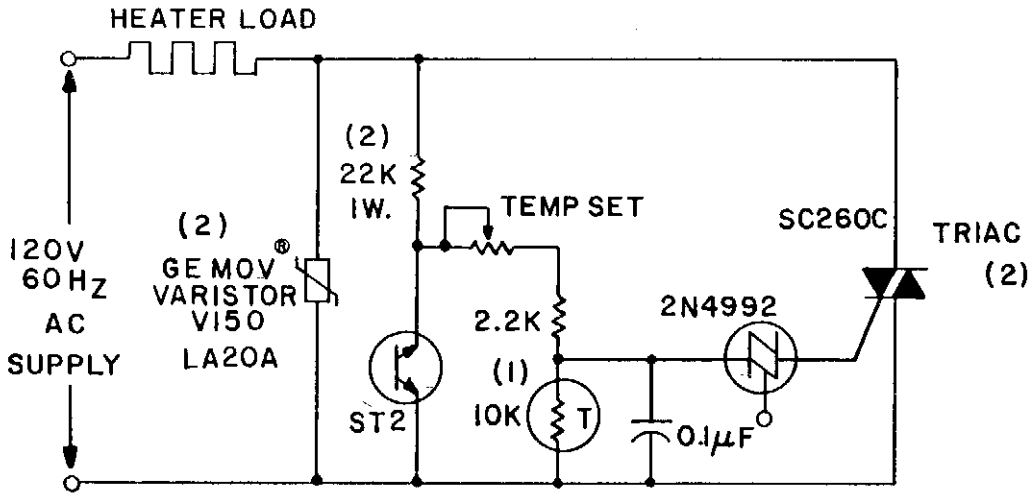

NOTES: 1. ThermistorNational Lead type 1D101, or equivalent.
2. Component values for 220V operation:
Resistor – 47K, 2W
GE-MOV® Varistor – V275LA20A
Triac – SC260E

GENERAL ELECTRIC *Fig. 99-6*

Circuit Notes

The circuit can control up to 6 kW of heating, with moderate gain, using a 25-amp triac (SC260D). Feedback is provided by the negative temperature co-efficient (NTC) thermistor, which is mounted adjacent to the environment being temperature controlled. The temperature set potentiometer is initially adjusted to the desired heating level. As the thermistor becomes heated by the load, its resistance drops, phasing back the conduction angle of the triac, so the load voltage is reduced. The ST2 diac is used as a back-to-back zener diode. Its negative resistance region in its E-I characteristic provides a degree of line voltage stabilization. As the input line voltage increases, the diac triggers earlier in the cycle and, hence, the average charging voltage to the 0.1 μF capacitor, decreases.

DUAL-TIMER CHIP CONTROLS TEMPERATURE WHILE MONITORING LIQUID LEVEL

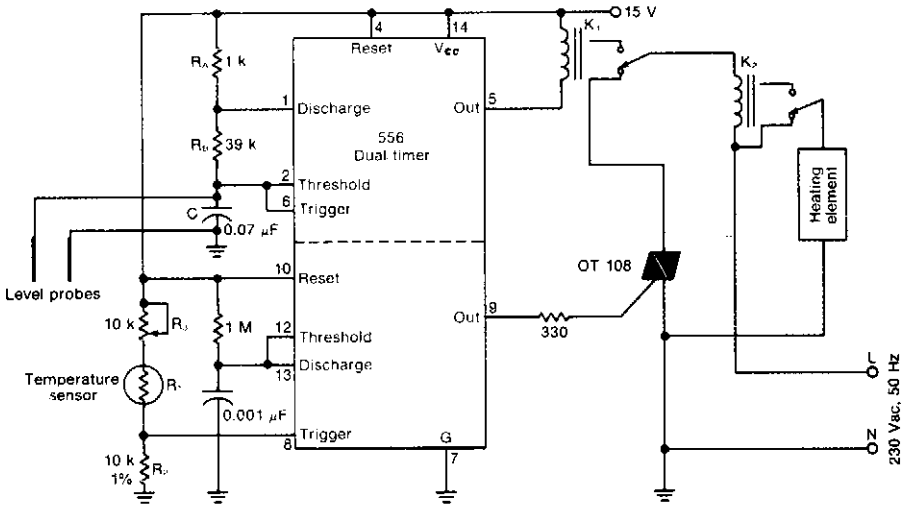

ELECTRONIC DESIGN

Fig. 99-7

Circuit Notes

One-half of a 556 dual timer monitors the temperature of a liquid bath, controlling a heating element that maintains temperature within ±2°C over a 32° - 200°C range. The other half monitors the liquid level, disconnecting the heater when the level drops below a preset point.

TEMPERATURE ALARM

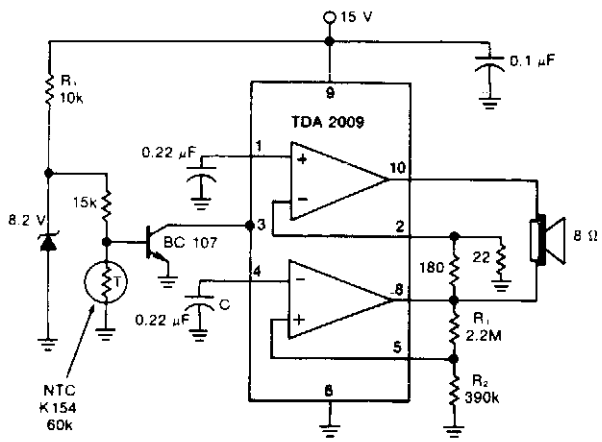

ELECTRONIC DESIGN

Fig. 99-8

Circuit Notes

The mute pin of this dual audio amplifier is used as the trigger for a one chip high-temperature alarm. One-half of the IC is connected as an oscillator and the other boosts the audio alarm outputs to 10W.

ADJUSTABLE THRESHOLD TEMPERATURE ALARM

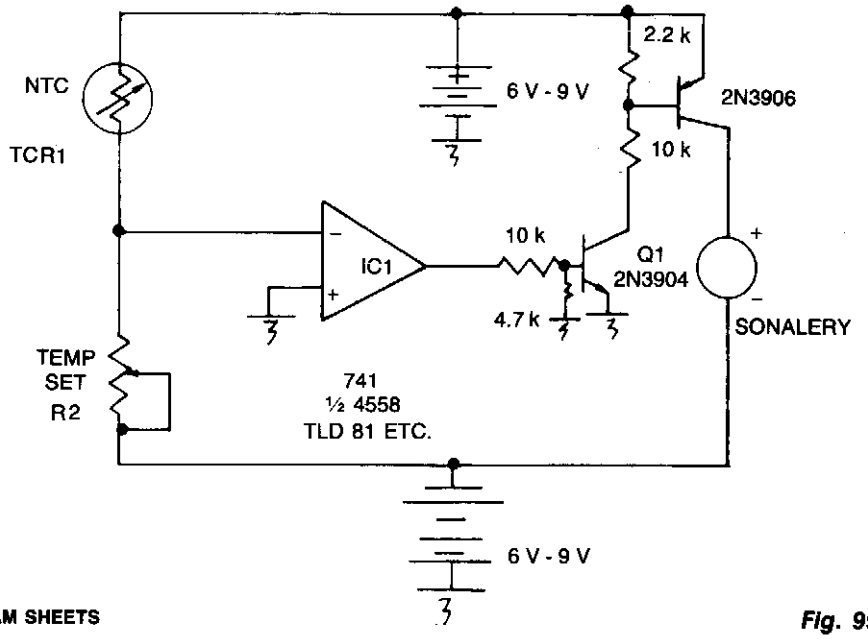

WILLIAM SHEETS

Fig. 99-9

Circuit Notes

When R1 increases as temp decreases, the output of IC1 goes positive, turning on Q1. Q1 conducts and causes Q2 to conduct, turning on the audible alarm. The threshold is set with potentiometer R2.

100

Temperature Sensors

The sources of the following circuits are contained in the Sources section beginning on page 694. The figure number contained in the box of each circuit correlates to the source entry in the Sources section.

Dual Output, Over-Under Temperature Monitor
Temperature Sensor and DVM Interface
Curvature Corrected Platinum RD Thermometer
Thermocouple Amplifier with Cold Junction Compensation
5-V Powered, Linearized Platinum RTD Signal Conditioner
HI LO Temperature Sensor

DUAL OUTPUT, OVER-UNDER TEMPERATURE MONITOR

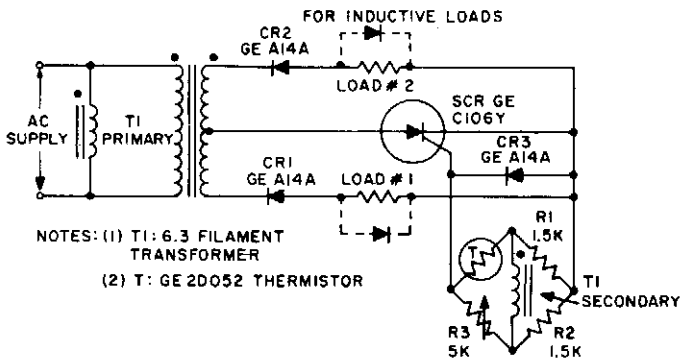

GENERAL ELECTRIC

Fig. 100-1

Circuit Notes

This circuit is ideal for use as an over-under temperature monitor, where its dual output feature can be used to drive HIGH and LOW temperature indicator lamps, relays, etc. T1 is a 6.3 volt filament transformer whose secondary winding is connected inside a four arm bridge. When the bridge is balanced, ac output is zero, and C5 (or C7) receives no gate signal. If the bridge is unbalanced by raising or lowering the thermistor's ambient temperature, and ac voltage will appear across the SCR's gate cathode terminals. Depending in which sense the bridge is unbalanced, the positive gate voltage will be in phase with, or 180° out of phase with the ac supply. If the positive gate voltage is in phase, the SCR will deliver load current through diode CR1 to load (1), diode CR2 blocking current to load (2). Conversely, if positive gate voltage is 180° out of phase, diode CR2 will conduct and deliver power to load (2), CR1 being reverse biased under these conditions. With the component values shown, the circuit will respond to changes in temperature of approximately 1-2°C. Substitution of other variable-resistance sensors, such as cadmium sulfide light dependent resistors (LDR) or strain gauge elements, for the thermistor shown is permissible.

TEMPERATURE SENSOR AND DVM INTERFACE

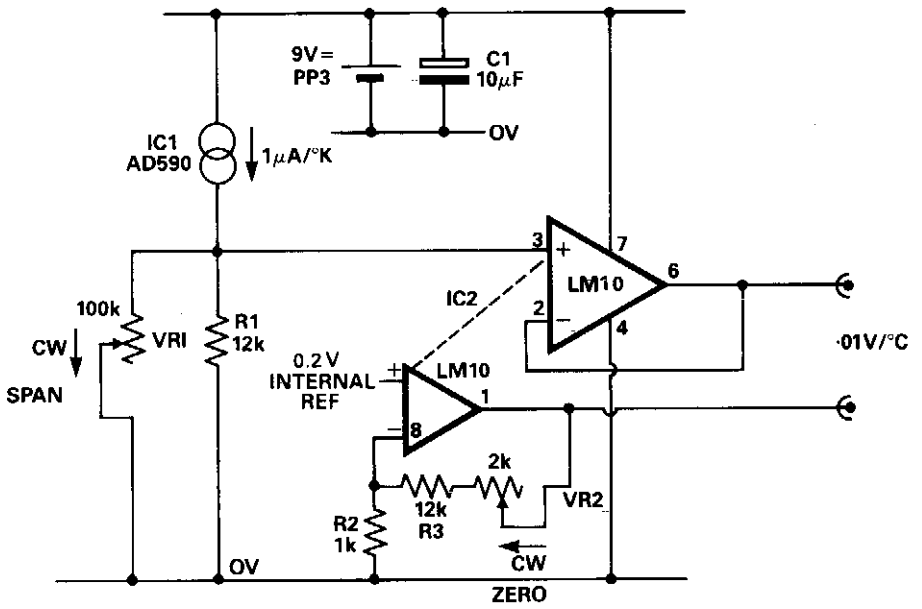

ELECTRONIC ENGINEERING

Fig. 100-2

Circuit Notes

The DVM gives a direct indication of the temperature of the sensor in degrees Centigrade. The temperature sensor IC1 gives a nominal 1 μA per degree Kelvin which is converted to 10 mV per degree Kelvin by R1 and VR1. IC2 is a micropower, low input drift op amp with internal voltage reference and amplifier. The main op amp in IC1 is connected as a voltage follower to buffer the sensor voltage at R1.

The second amplifier in IC1 is used to amplify the .2 V internal reference up to 2.73 V in order to offset the 273 degrees below 0°C. The output voltage of the unit is the differential output of the two op amps and is thus equal to 0.01 V per °C.

CURVATURE CORRECTED PLATINUM RTD THERMOMETER

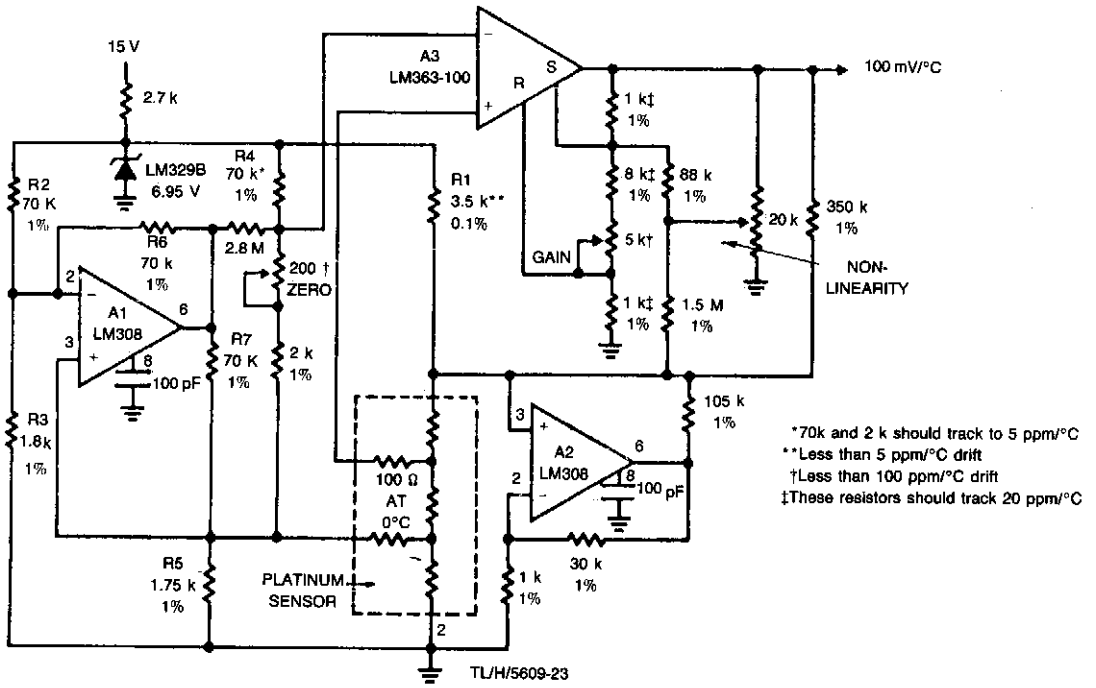

NATIONAL SEMICONDUCTOR CORP.

Fig. 100-3

Circuit Notes

This thermometer is capable of 0.01°C accuracy over −50°C to +150°C. A unique trim arrangement eliminates cumbersome trim interactions so that zero gain, and nonlinearity correction can be trimmed in one even trip. Extra op amps provide full Kelvin sensing on the sensor without adding drift and offset terms found in other designs. A1 is configured as a Howland current pump, biasing the sensor with a fixed current. Resistors R2, R3, R4 and R5 form a bridge driven into balance by A1. In balance, both inputs of A2 are at the same voltage. Since R6 = R7, A1 draws equal currents from both legs of the bridge. Any loading of the R4/R5 leg by the sensor would unbalance the bridge; therefore, both bridge taps are given to the sensor open circuit voltage and no current is drawn.

THERMOCOUPLE AMPLIFIER WITH COLD JUNCTION COMPENSATION

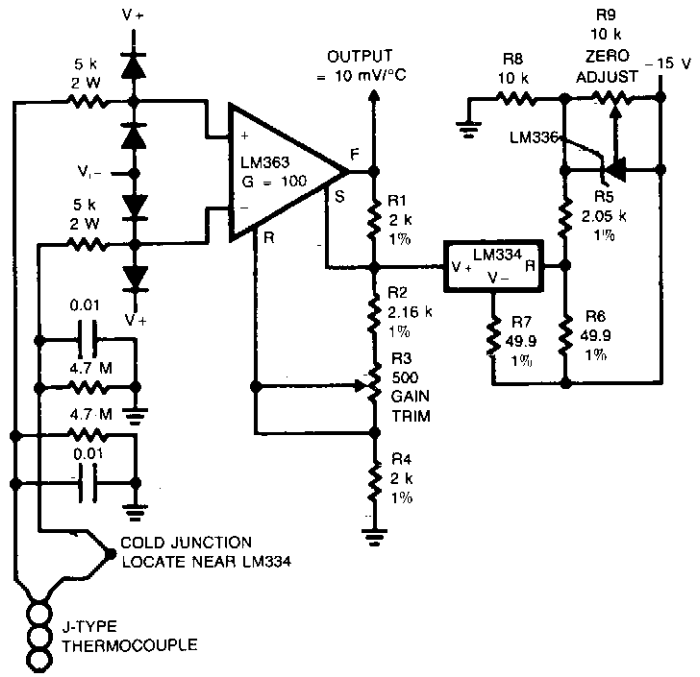

NATIONAL SEMICONDUCTOR CORP.

Fig. 100-4

Circuit Notes

Input protection circuitry allows thermocouple to short to 120 Vac without damaging the amplifier.

Calibration:

1. Apply a 50 mV signal in place of the thermocouple. Trim R3 for V_{OUT} = 12.25 V.
2. Reconnect the thermocouple. Trim R9 for correct output.

5-V POWERED, LINEARIZED PLATINUM RTD SIGNAL CONDITIONER

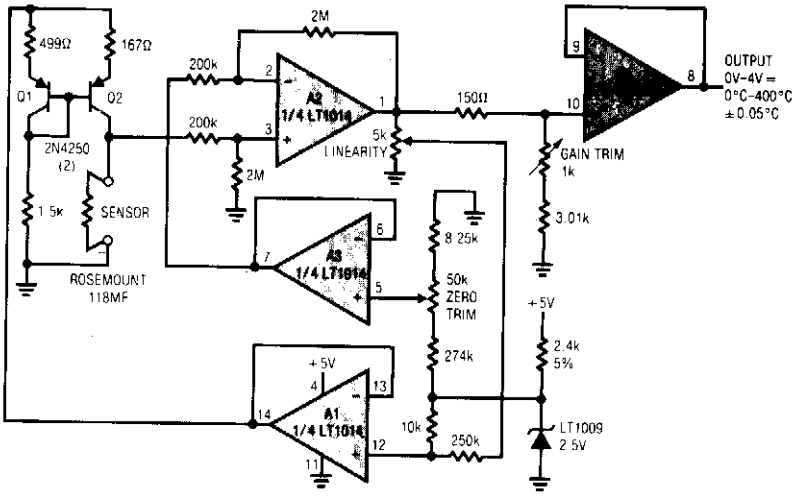

ALL RESISTORS ARE TRW-MAR-6 METAL FILM.
RATIO MATCH 2M 200K ±0.01%.
TRIM SEQUENCE
SET SENSOR TO 0 VALUE
ADJUST ZERO FOR 0V OUT

LINEAR TECHNOLOGY CORP.

Fig. 100-5

HI LO TEMPERATURE SENSOR

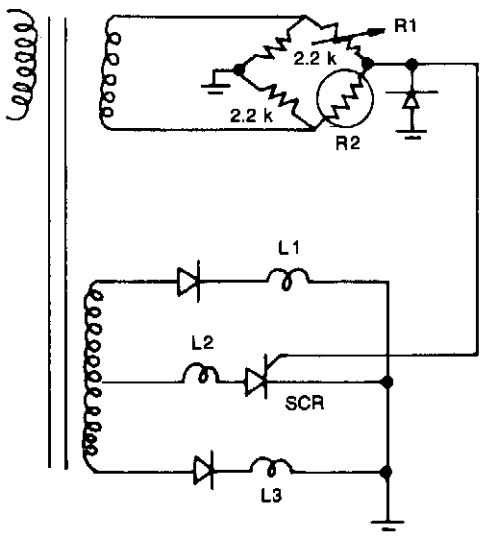

WILLIAM SHEETS

Fig. 100-6

Circuit Notes

Resistors R1, R2, and the two 2.2 k resistors form a bridge circuit. R2 is a thermistor, and R1 sets the temperature at which L2 lights. Lower or higher temperatures light L1 or L3 to indicate an over- or under-temperature condition.

101

Temperature-to-Frequency Converters

The sources of the following circuits are contained in the Sources section beginning on page 694. The figure number contained in the box of each circuit correlates to the source entry in the Sources section.

Temperature-to-Frequency Converter
Digital Temperature Measuring Circuit

TEMPERATURE-TO-FREQUENCY CONVERTER

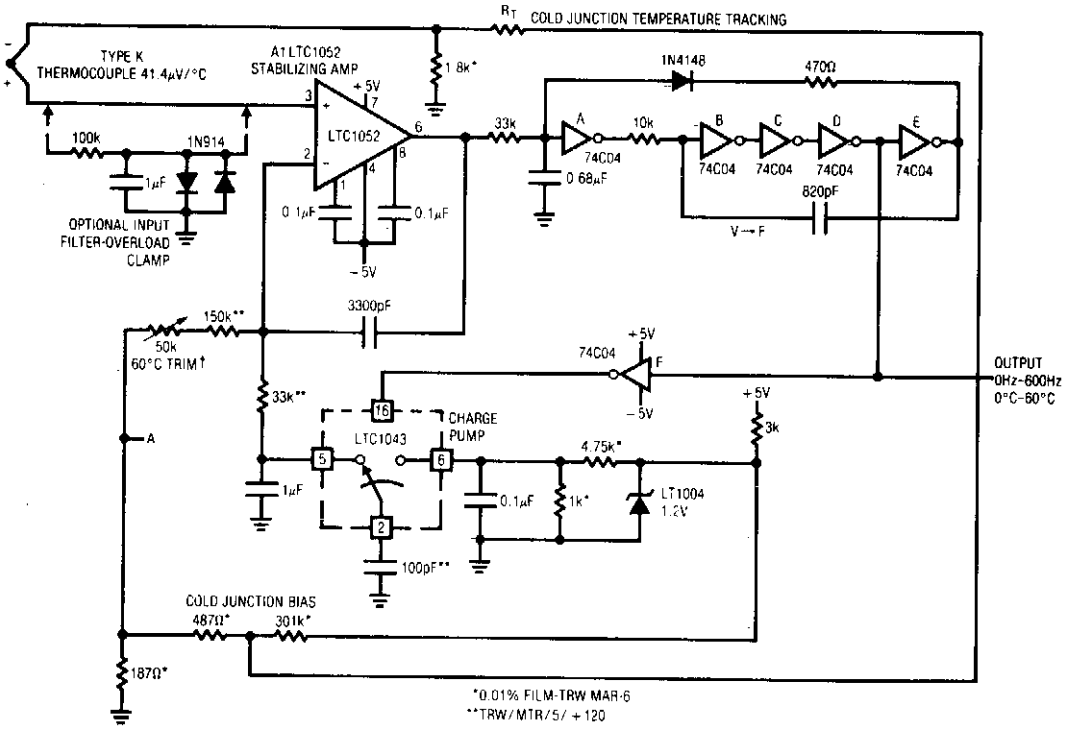

*0.01% FILM-TRW MAR-6
**TRW/MTR/5/ +120
R_T = YELLOW SPRINGS INST. #44007
100pF = POLYSTYRENE
†FOR GENERAL PURPOSE (1mV FULL-SCALE) 10-BIT A TO D. REMOVE THERMOCOUPLE–COLD JUNCTION NETWORK, GROUND POINT A, AND DRIVE LTC1052 POSITIVE INPUT.

LINEAR TECHNOLOGY CORPORATION

Fig. 101-1

Circuit Notes

A1's positive input is biased by the thermocouple. A1's output drives a crude V → F converter, comprised of the 74C04 inverters and associated components. Each V → F output pulse causes a fixed quantity of charge to be dispensed into the 1 μF capacitor from the 100 pF capacitor via the LT1043 switch. The larger capacitor integrates the packets of charge, producing a dc voltage at A1's negative input. A1's output forces the V– F converter to run at whatever frequency is required to balance the amplifier's inputs. This feedback action eliminates drift and nonlinearities in the V → F converter as an error item and the output frequency is solely a function of the dc conditions at A1's inputs. The 3300 pF capacitor forms a dominant response pole at A1, stabilizing the loop.

DIGITAL TEMPERATURE MEASURING CIRCUIT

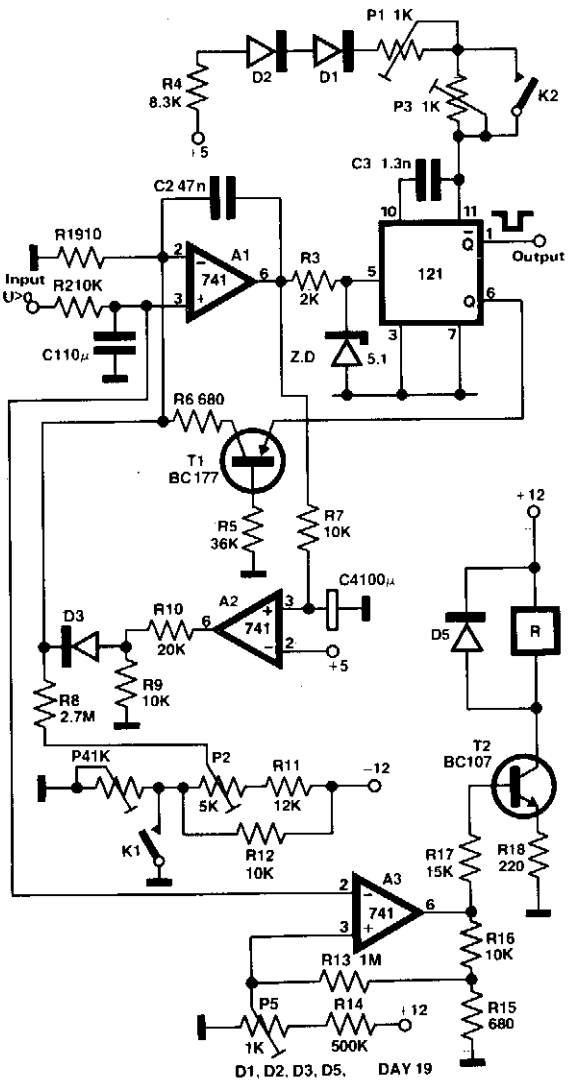

Circuit Notes

The output voltage of a thermocouple is converted into frequency measured by a digital frequency meter. The measuring set connected with Ni-NiCr thermocouple permits you to measure the temperatures within the range of 5°C - 800°C with ±1°C error. The output thermocouple signal is proportional to the temperature difference between the hot junction and the thermostat kept at 0°C, it drives the voltage-to-frequency converter changing the analogue input signal into the output frequency with the conversion ratio adjusted in such a way, that the frequency is equal to the measured temperature in Celsius degrees, e.g., for 350°C the frequency value is 350 Hz.

ELECTRONIC ENGINEERING

Fig. 101-2

102

Theremins

The sources of the following circuits are contained in the Sources section beginning on page 694. The figure number contained in the box of each circuit correlates to the source entry in the Sources section.

Electronic Theremin
Digital Theremin

ELECTRONIC THEREMIN

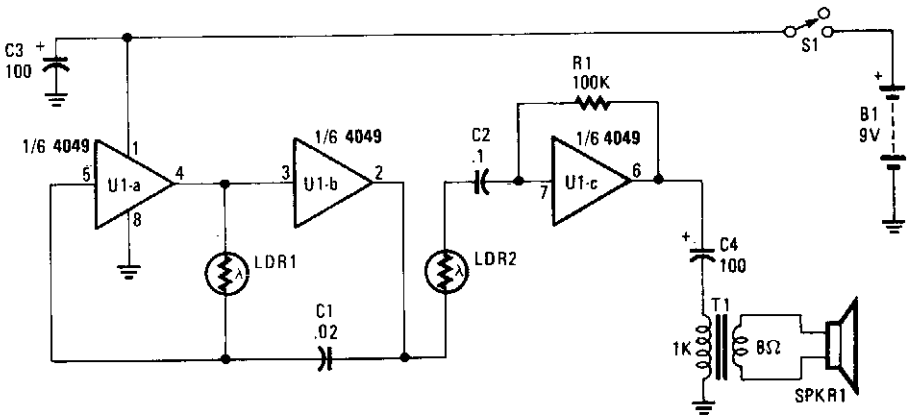

HANDS-ON ELECTRONICS

Fig. 102-1

Circuit Notes

This circuit has the CMOS IC doing double-duty performance. The first two inverters operate as a digital audio oscillator; the third operates as a low-gain linear audio amplifier. As the intensity of the light falling on photoresistor LDR1 increases the oscillator's frequency increases; similarly, the illumination falling on photoresistor LDR2 determines the volume level from the loudspeaker: The more illumination the more volume. If you flop and wave your hands between the two photocells and a light source, a special kind of electronic music will be produced.

DIGITAL THEREMIN

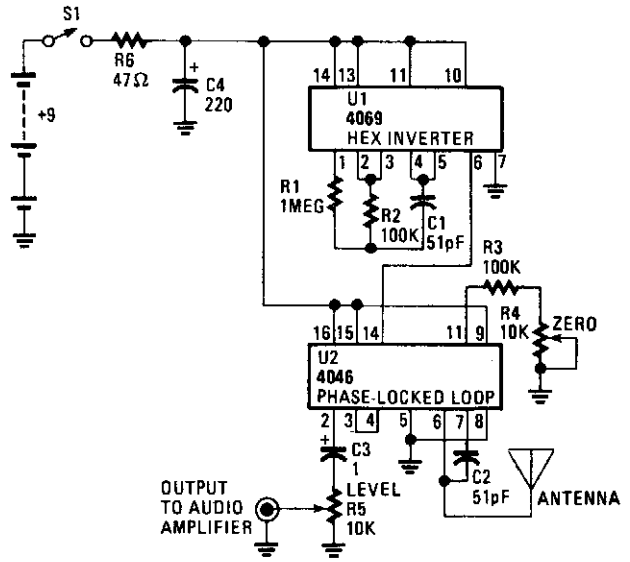

HANDS-ON ELECTRONICS

Fig. 102-2

Circuit Notes

The CD4069 or 74C04 hex inverter—is used as a fixed-frequency oscillator centered around 100 kHz. U2 contains the variable frequency oscillator and balanced modulator. The CD4046 is a phase-locked loop and R3, R4, and C2 determine the center frequency of the on-chip oscillator. The antenna forms a parallel capacitance with C2, which allows the frequency to be shifted several kilohertz by bringing a hand near the antenna. R4, the ZERO control, allows the variable oscillator to be set to the same frequency as the fixed oscillator. When the difference frequency is below 15 Hz, it is below the lower frequency limit of the ear. By setting both oscillators to the same frequency, the Theremin remains silent until the performer brings his or her hand near the antenna. The oscillators are mixed by an exclusive OR gate inside the 4046. That gate acts as a digital balanced modulator, which produces the sum and difference frequencies. The output of the gate is then ac coupled by C3 to LEVEL control R5 and an output jack for connection to an audio amplifier or stereo receiver.

103
Thermometer Circuits

The sources of the following circuits are contained in the Sources section beginning on page 694. The figure number contained in the box of each circuit correlates to the source entry in the Sources section.

Digital Thermocouple Thermometer
Remote Thermometer
Electronic Thermometer
Differential Thermometer
Basic Digital Thermometer, Kelvin Scale with Zero Adjust
Centigrade Thermometer (0°C-100°C)

DIGITAL THERMOCOUPLE THERMOMETER

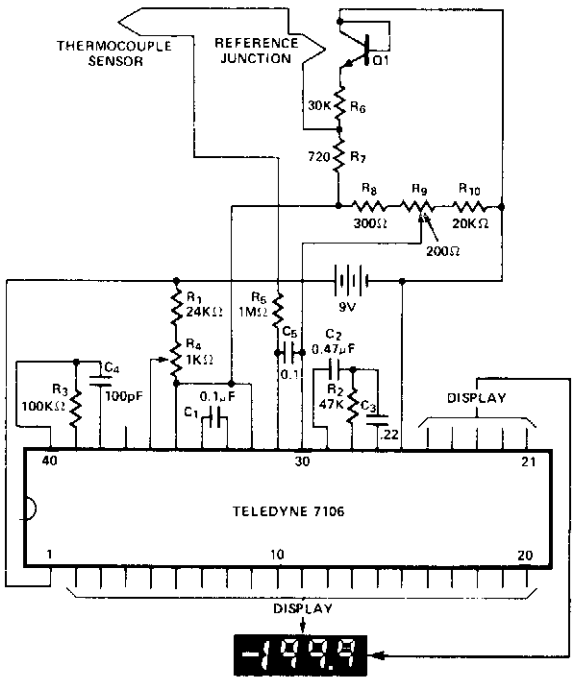

TELEDYNE SEMICONDUCTOR

Fig. 103-1

Circuit Notes

This digital thermocouple thermometer uses one active component and 15 passive components. With this circuit, both type J and type K thermocouples may be used. The type J will measure over the temperature range of 10 to 530°C with a conformity of ±2°C. The type K will measure over a temperature range of 0°C to 1000°C with a conformity of ±3°C.

REMOTE THERMOMETER

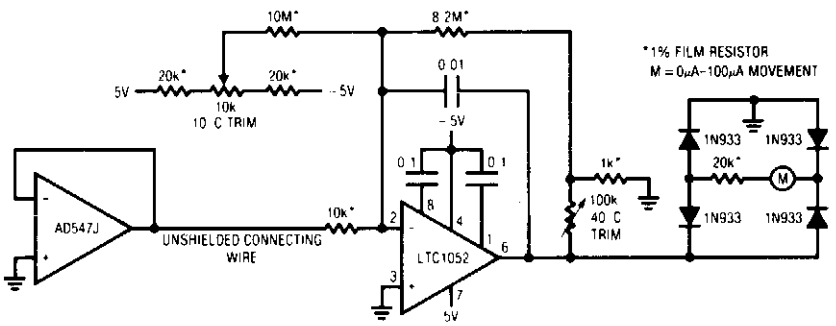

LINEAR TECHNOLOGY

Fig. 103-2

Circuit Notes

The low output impedance of a closed loop op amp gives ideal line-noise immunity, while the op amp's offset voltage drift provides a temperature sensor. Using the op amp in this way requires no external components and has the additional advantages of a hermetic package and unit-to-unit mechanical uniformity if replacement is ever required. The op amp's offset drift is amplified to drive the meter by the LTC1052. The diode bridge connection allows either positive or negative op amp temperature sensor offsets to interface directly with the circuit. In this case, the circuit is arranged for a +10°C to +40°C output, although other ranges are easily accommodated. To calibrate this circuit, subject the op amp sensor to a +10°C environment and adjust the 10°C trim for an appropriate meter indication. Next, place the op amp sensor in a +40°C environment and trim the 40°C adjustment for the proper reading. Repeat this procedure until both points are fixed. Once calibrated, this circuit will typically provide accuracy within ±2°C, even in high noise environments.

ELECTRONIC THERMOMETER

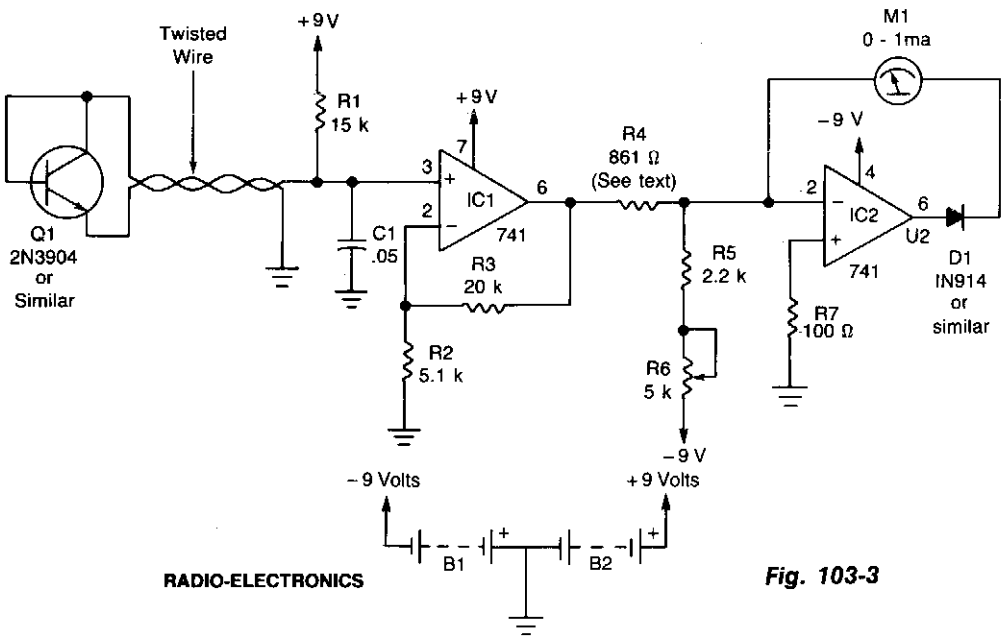

Fig. 103-3

Circuit Notes

An inexpensive electronic thermometer is capable of measuring temperatures over a range of from −30°F to +120°F. A diode-connected 2N3904 transistor used as the temperature sensor forms a voltage divider with R1. As temperature increases, the voltage drop across the transistor changes by approximately −1.166 millivolts-per°F. As a result, the current at pin 3 of IC1, a 741 op amp with a gain of 5, decreases as the temperature measured by the sensor increases.

A second 741 op amp, IC2 is configured as an inverting amplifier. Resistors R5 and R6 calibrate the circuit. Calibration is also straightforward. When properly done, a temperature of −30°F will result in a meter reading of 0 milliamps, while a temperature of 120°F will result in a meter reading of 1 milliamp. Divide the scale between those points into equal segments and mark the divisions with the appropriate corresponding temperatures. The calibration is completed by placing the sensor in an environment with a known temperature, such as an ice-point bath. Place the sensor in the bath and adjust R6 until you get the correct meter reading.

DIFFERENTIAL THERMOMETER

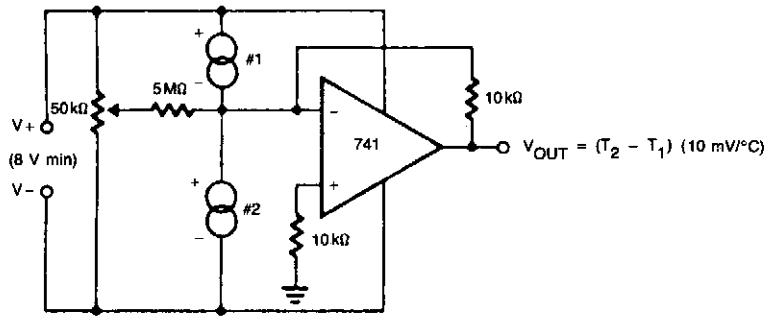

Fig. 103-4

Circuit Notes

The 50 k ohm pot trims offsets in the devices whether internal or external, so it can be used to set the size of the difference interval. This also makes it useful for liquid-level detection (where there will be a measurable temperature difference).

BASIC DIGITAL THERMOMETER, KELVIN SCALE WITH ZERO ADJUST

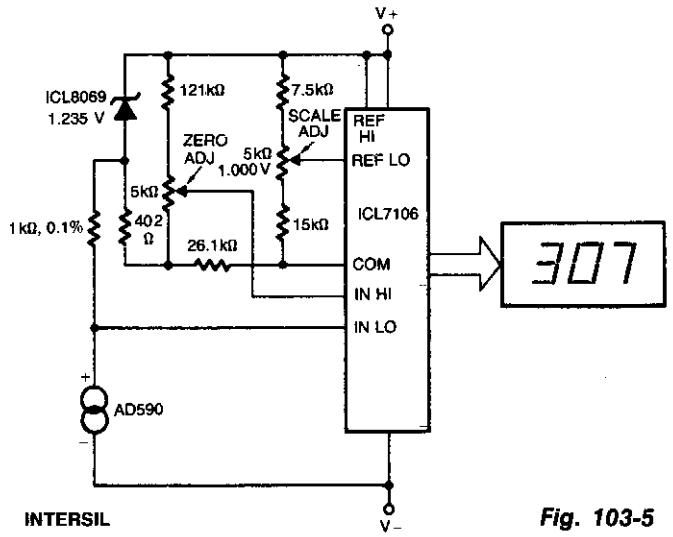

Fig. 103-5

Circuit Notes

This circuit allows "zero adjustment" as well as slope adjustment. The ICL8069 brings the input within the common-mode range, while the 5 k ohm pots trim any offset at 218° K (−55°C), and set the scale factor.

CENTIGRADE THERMOMETER (O°C-100°C)

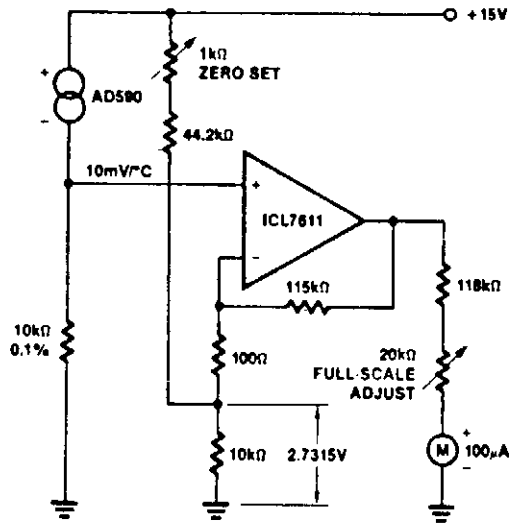

INTERSIL

Fig. 103-6

Circuit Notes

The ultra-low bias current of the ICL7611 allows the use of large-value gain-resistors, keeping meter-current error under ½%, and therefore saving the expense of an extra meter-driving amplifier.

104

Tilt Meters

The sources of the following circuits are contained in the Sources section beginning on page 694. The figure number contained in the box of each circuit correlates to the source entry in the Sources section.

Tiltmeter Indicates Sense of Slope
Differential Capacitance Measurement Circuit
Ultra-Simple Level

TILTMETER INDICATES SENSE OF SLOPE

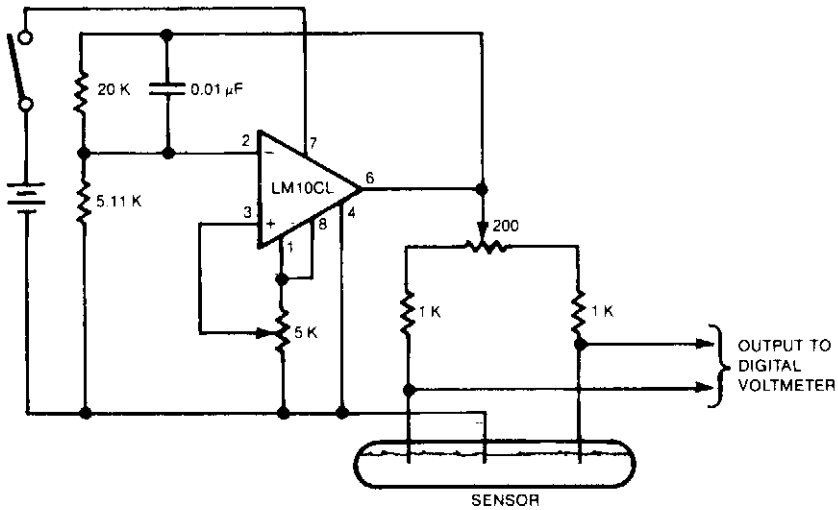

NASA

Fig. 104-1

Circuit Notes

Electrodes are immersed in an electrolyte that remains level while the sensor follows the tilt of the body on which it is placed, more of one outer electrode and less of the other are immersed and their resistances fall or rise, respectively. The resistance change causes a change in the output voltage of the bridge circuit. The sensor forms the two lower legs of the bridge, and two 1000 ohm metal film resistors and a 200 ohm ceremet balance potentiometer form the two upper legs. In preparation for use, the bridge is balanced by adjusting the balance potentiometer so that the bridge output voltage is zero when the sensor is level. The bridge input voltage (dc excitation) is adjusted to provide about 10 millivolts output per degree of slope, the polarity indicating the sense of the slope. This scaling factor allows the multimeter to read directly in degrees if the user makes a mental shift of the meter decimal point. The scaling-factor calibration is done at several angles to determine the curve of output voltage versus angle.

DIFFERENTIAL CAPACITANCE MEASUREMENT CIRCUIT

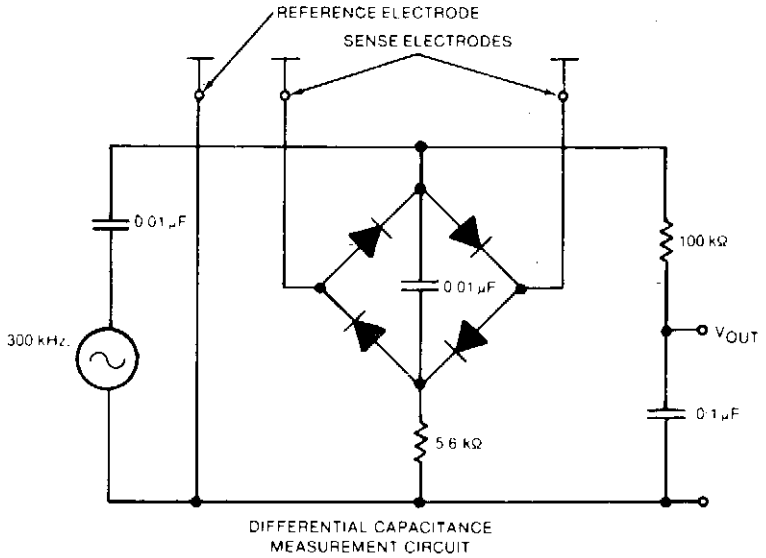

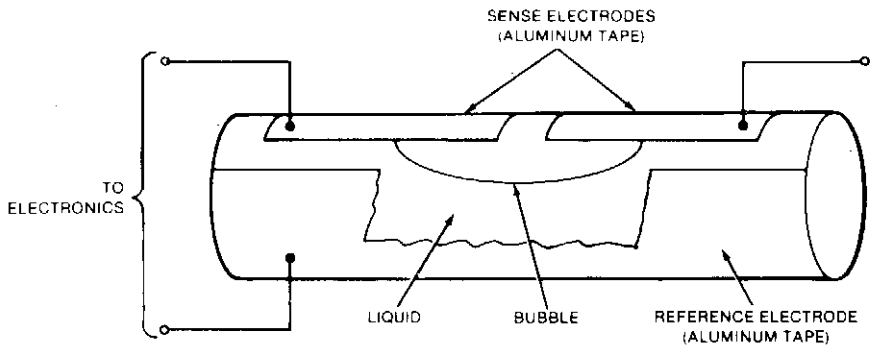

NASA

Fig. 104-2

Circuit Notes

A bubble vial with external aluminum-foil electrodes is the sensing element for a simple indicating tiltmeter. To measure bubble displacement, a bridge circuit detects the difference in capacitance between the two sensing electrodes and the reference electrode. Using this circuit, a tiltmeter level vial with 2 mm deflection for 5 arc-seconds of tilt easily resolves 0.05 arc-second. The four diodes are CA3039, or equivalent.

ULTRA-SIMPLE LEVEL

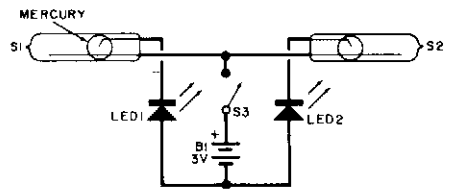

POPULAR ELECTRONICS *Fig. 104-3*

Circuit Notes

This electronic level uses two LED indicators instead of an air bubble. If the surface is tilted to the right, one LED lights; if it's tilted to the left, the other LED lights. When the surface is level, both LEDs light. It uses two unidirectional mercury switches, S1 and S2. The unidirectional mercury switch has one long electrode and one short, angled electrode. The pool of mercury "rides" on the long electrode and makes contact between the two electrodes if the unit is held in a horizontal position.

105

Time-Delay Circuits

The sources of the following circuits are contained in the Sources section beginning on page 694. The figure number contained in the box of each circuit correlates to the source entry in the Sources section.

Hour Time-Delay Sampling Circuit
Time Delay With Constant Current Charging
Low-Cost Integrator Multiplies 555 Timer's Delay
Simple Time-Delay Circuit Using Two SCRs

HOUR TIME-DELAY SAMPLING CIRCUIT

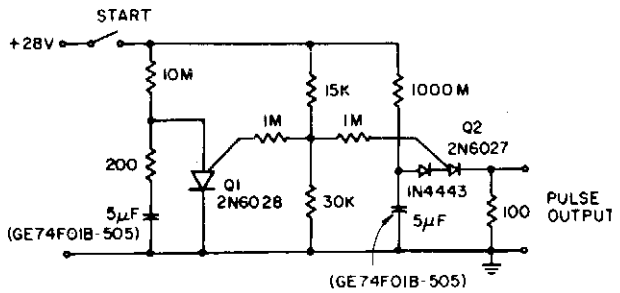

GENERAL ELECTRIC

Fig. 105-1

Circuit Notes

The circuit lowers the effective peak current of the output PUT, Q2. By allowing the capacitor to charge with high gate voltage and periodically lowering gate voltage, when Q1 fires, the timing resistor can be a value which supplies a much lower current than I_P. The triggering requirement here is that minimum charge to trigger flow through the timing resistor during the period of the Q1 oscillator. This is not capacitor size dependent, only capacitor leakage and stability dependent.

TIME DELAY WITH CONSTANT CURRENT CHARGING

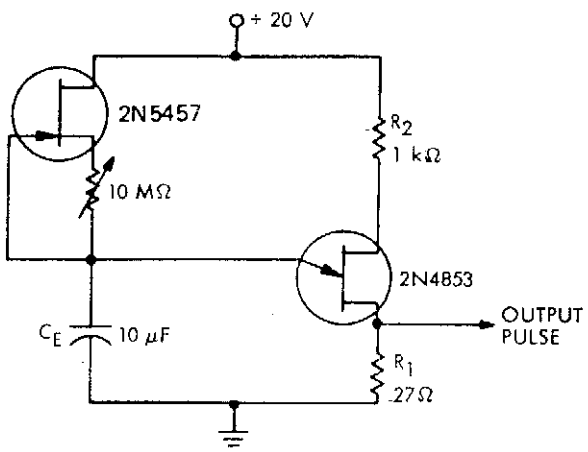

Fig. 105-2

MOTOROLA INC.

LOW-COST INTEGRATOR MULTIPLIES 555 TIMER'S DELAY

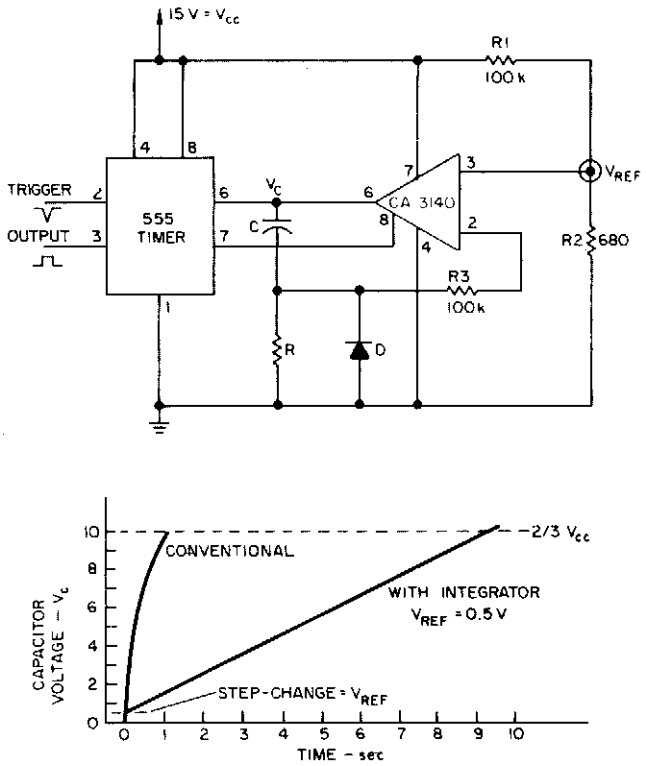

ELECTRONIC DESIGN

Fig. 105-3

Circuit Notes

Long delay times can be derived from a 555 timer with reasonably sized capacitors if an integrator circuit is used. The capacitor's charging time with an integrator circuit can be much longer than with a conventional 555-timer configuration.

SIMPLE TIME-DELAY CIRCUIT USING TWO SCRs

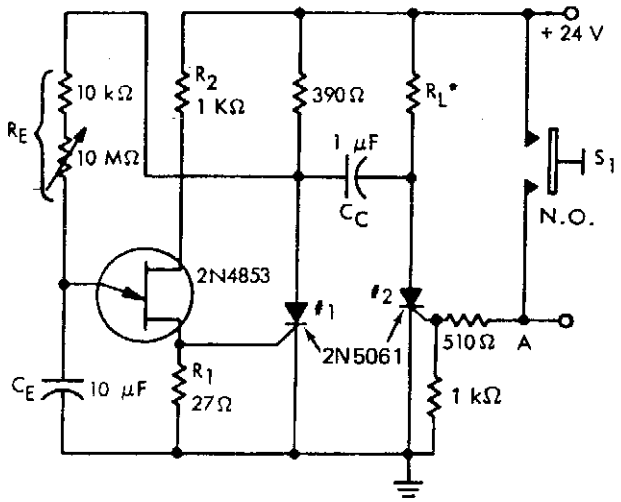

*Value of R_L must be low enough to allow hold current to flow in the SCR.

MOTOROLA INC.

Fig. 105-4

106

Timers

The sources of the following circuits are contained in the Sources section beginning on page 694. The figure number contained in the box of each circuit correlates to the source entry in the Sources section.

Long-Term Electronic Timer
Timer with Alarm
Timer Circuit
PUT Long Duration Timer
Programmable Voltage Controlled Timer
Low Power Microprocessor-Programmable Interval Timer
Precision Elapsed Time/Countdown Timer
Adjustable AC Timer .2 to 10 sec.

LONG-TERM ELECTRONIC TIMER

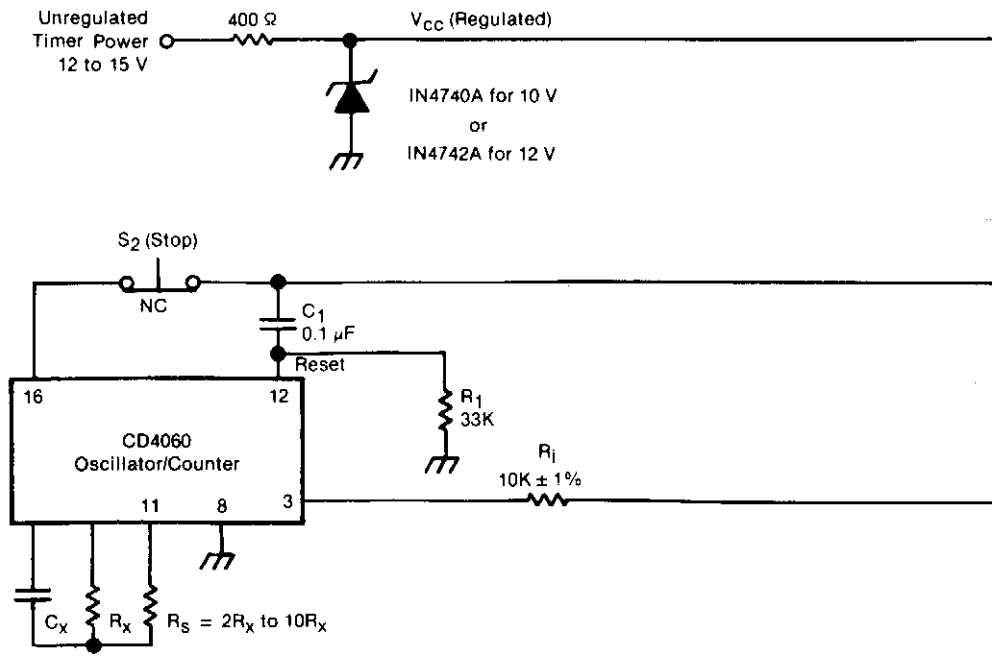

NASA

Fig. 106-1

Circuit Notes

The timer includes an oscillator and a counter in an integrated circuit. The timing interval equals the oscillator period multiplied by the number of cycles to be counted. The oscillator frequency depends upon resistor RS and capacitor CX. The number of oscillator cycles to be counted before the counter output changes state is determined by the selection of the counter output terminal, shown here as pin 3. The interval can be set anywhere in the range from fractions of a second to months; it is given by $T = 0.55\ R_S C_X 2^n$, where n is an integer determined by the counter-output selection. Operation is initiated by the closure of momentary switch S1 (or by a command signal having a similar effect). This grounds one side of relay K1, thereby activating the relay

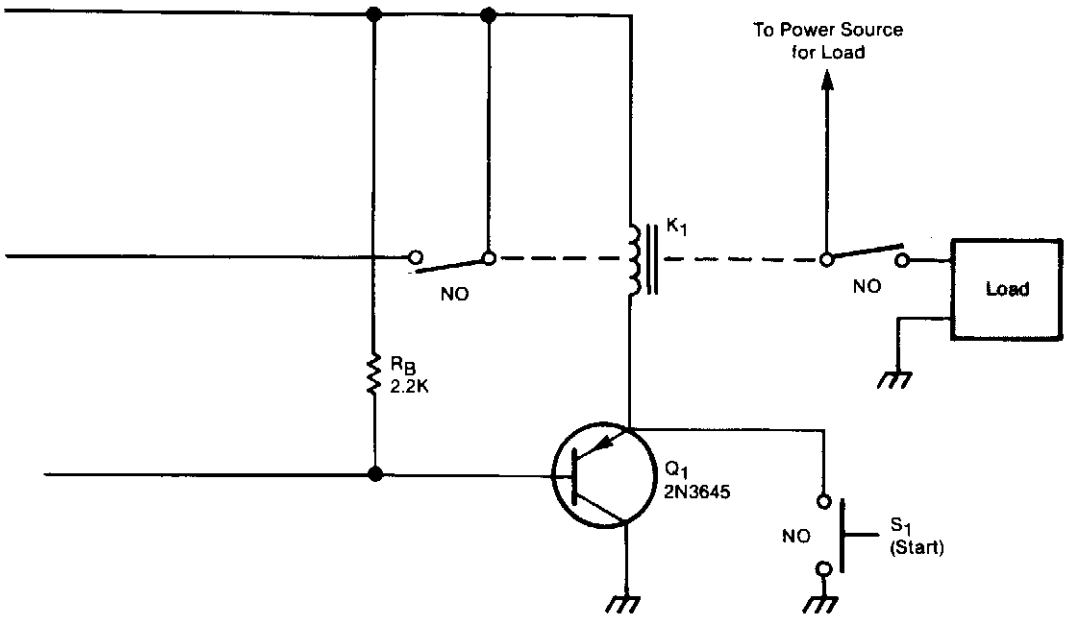

and causing the closure of the switches that supply power to the timer and to the load. The turn-on of V_{CC} at the timer is coupled through C1 to the counter-reset terminal, thus resetting the counter. The initial reset voltage transient is then drained away through R1 to permit normal operation. During the first half cycle of the counter operation, the counter output voltage (at pin 3 in this case) is low. This turns on transistor Q1 so that relay K1 latches on, enabling the timer to continue running even though switch S1 has opened. The oscillator runs while the relay is on. When the number of oscillator cycles reaches the limit, the counter output voltage at pin 3 goes high. This turns off Q1, thereby turning off the relay and returning the system to the original "power-off" state to await the next starting command. The timing cycle can also be interrupted and the system turned off by opening normally-closed switch S2.

TIMER WITH ALARM

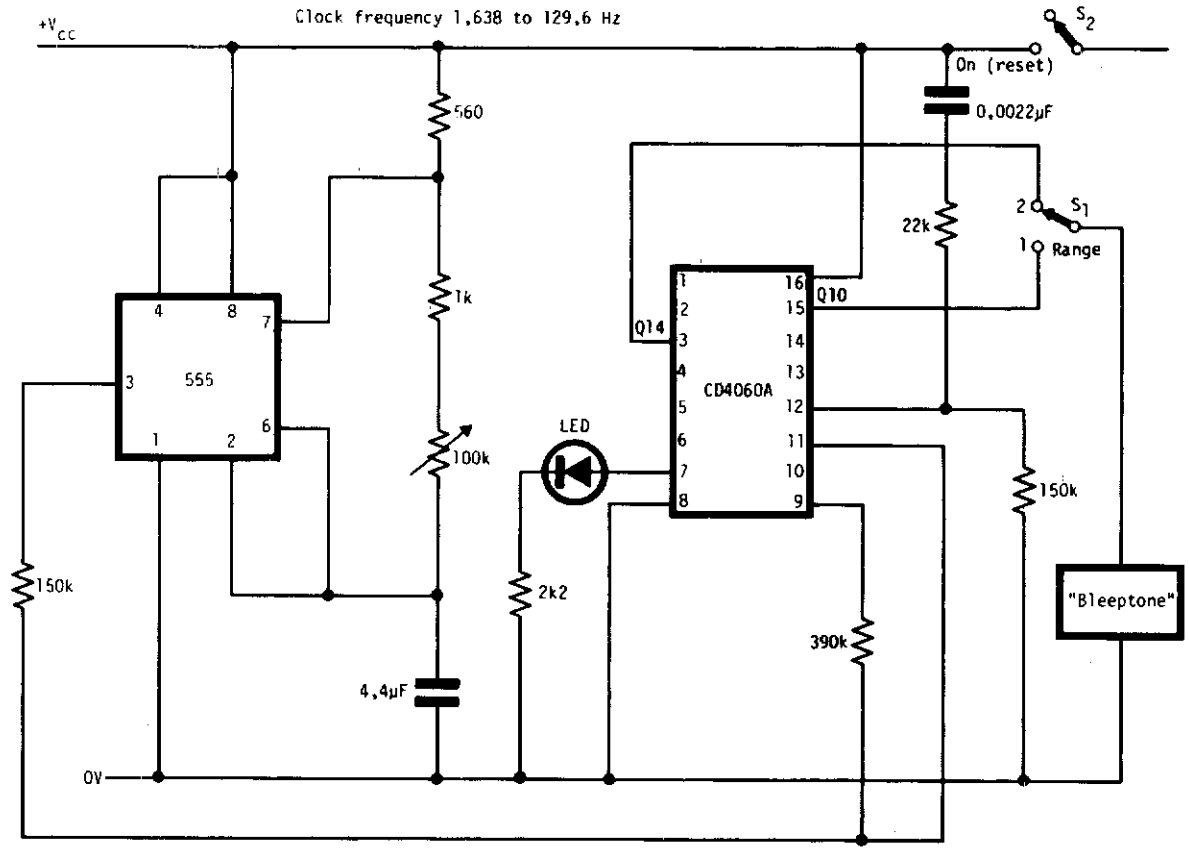

ELECTRONIC ENGINEERING

Fig. 106-2

Circuit Notes

The circuit has two ranges: 10 secs to 5 mins and 1 min to 80 mins. It can be powered by a 9-V battery. With the LED connected as shown a reasonable frequency of flashing occurs throughout the range of operation. This circuit is reset when S2 is closed.

TIMER CIRCUIT

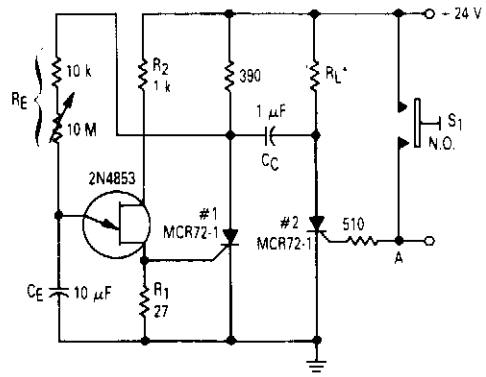

*VALUE OF R_L MUST BE LOW ENOUGH TO ALLOW HOLD CURRENT TO FLOW IN THE SCR.

MOTOROLA

Fig. 106-3

Circuit Notes

After one cycle of operation, SCR 1 will be on, and a low value of voltage is applied to the UJT emitter circuit, interrupting the timing function. When pushbutton S1 is pushed, or a positive going pulse is applied at point A, SCR 2 will turn on, and SCR 1 will be turned off by commutating capacitor CC. With SCR 1 off, the supply voltage will be applied to RE and the circuit will begin timing again. After a period of time determined by the setting of RE, the UJT will fire and turn SCR 1 on and commutate SCR 2 off. The time delay is determined by the charge time of the capacitor.

PUT LONG DURATION TIMER

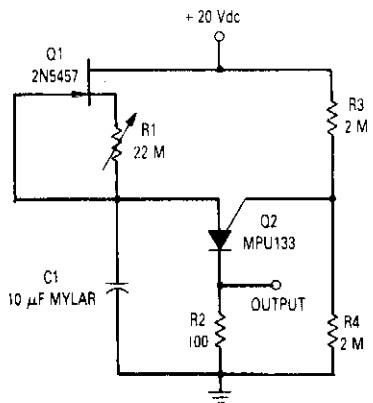

MOTOROLA

Fig. 106-4

Circuit Notes

The time circuit can provide a time delay of up to 20 minutes. The circuit is a standard relaxation oscillator with a FET current source in which resistor R1 is used to provide reverse bias on the gate-to-source of the JFET. This turns the JFET off and increases the charging time of C1. C1 should be a low leakage capacitor such as a mylar type.

PROGRAMMABLE VOLTAGE CONTROLLED TIMER

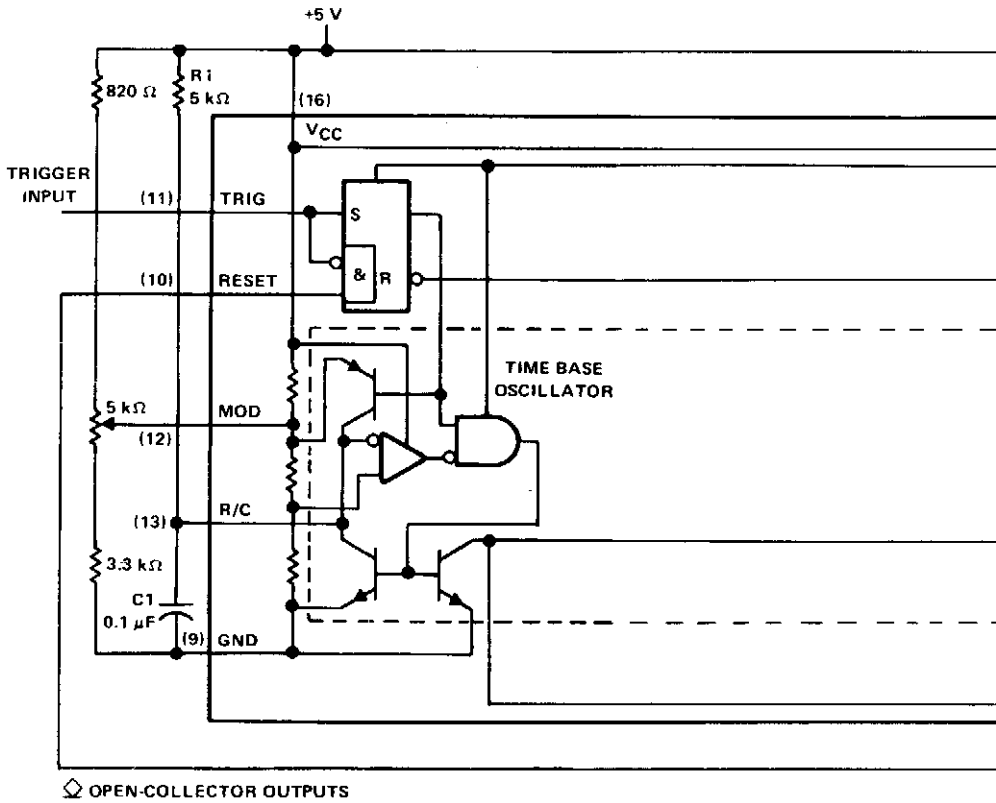

TEXAS INSTRUMENTS

Fig. 106-5

Circuit Notes

The μA2240 may easily be configured as a programmable voltage controlled timer with a minimum number of external components. The modulation input (pin 12), which allows external adjustment of the input threshold level. A variable voltage is applied from the arm of a 10 k ohm potentiometer connected from V_{CC} to ground. A change in the modulation input voltage will result in a change in the time base oscillator frequency and the period of the time base output (TBO). The TBO has an open-collector output that

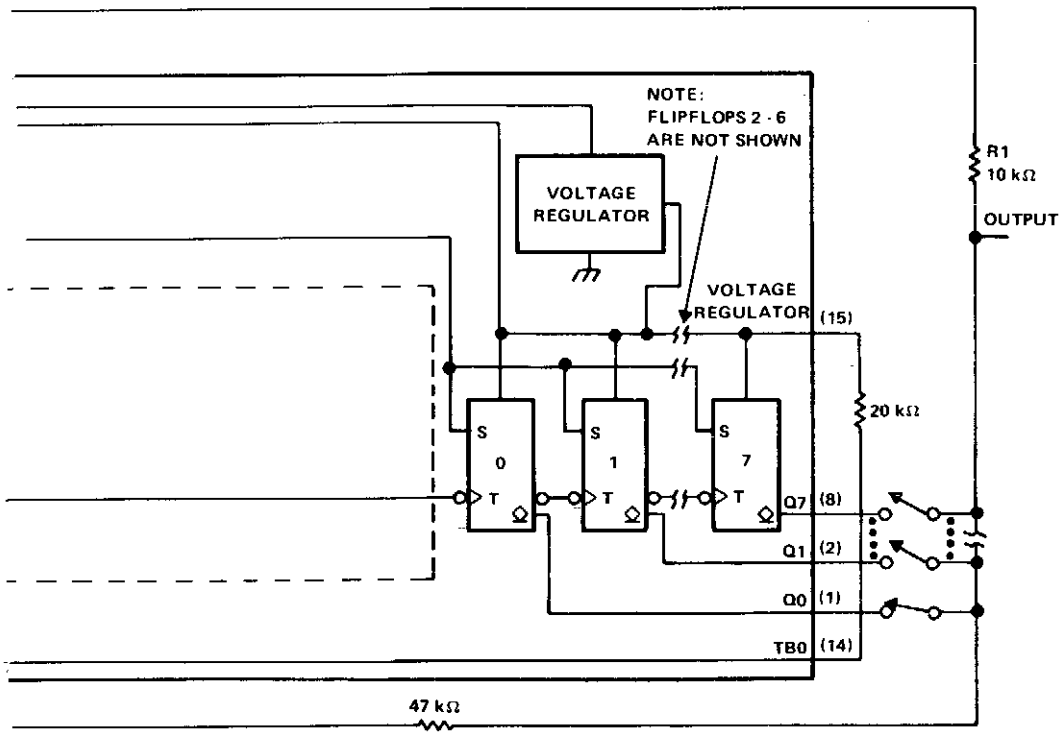

is connected to the regulator output via a 10 k ohm pull-up resistor. The output of the TBO drives the input to the 8-stage counter section.

At start-up, a positive trigger pulse starts the TBO and sets all counter outputs to a low state. The binary outputs are open-collector stages that may be connected together to the 10 k ohm pull-up resistor to provide a "wired-OR" output function. This circuit may be used to generate 255 discrete time delays that are integer multiples of the time-base period. The total delay is the sum of the number of time-base periods, which is the binary sum of the Q outputs connected. Delays from 200 μs to 0.223 s are possible with this configuration.

LOW POWER MICROPROCESSOR PROGRAMMABLE INTERVAL TIMER

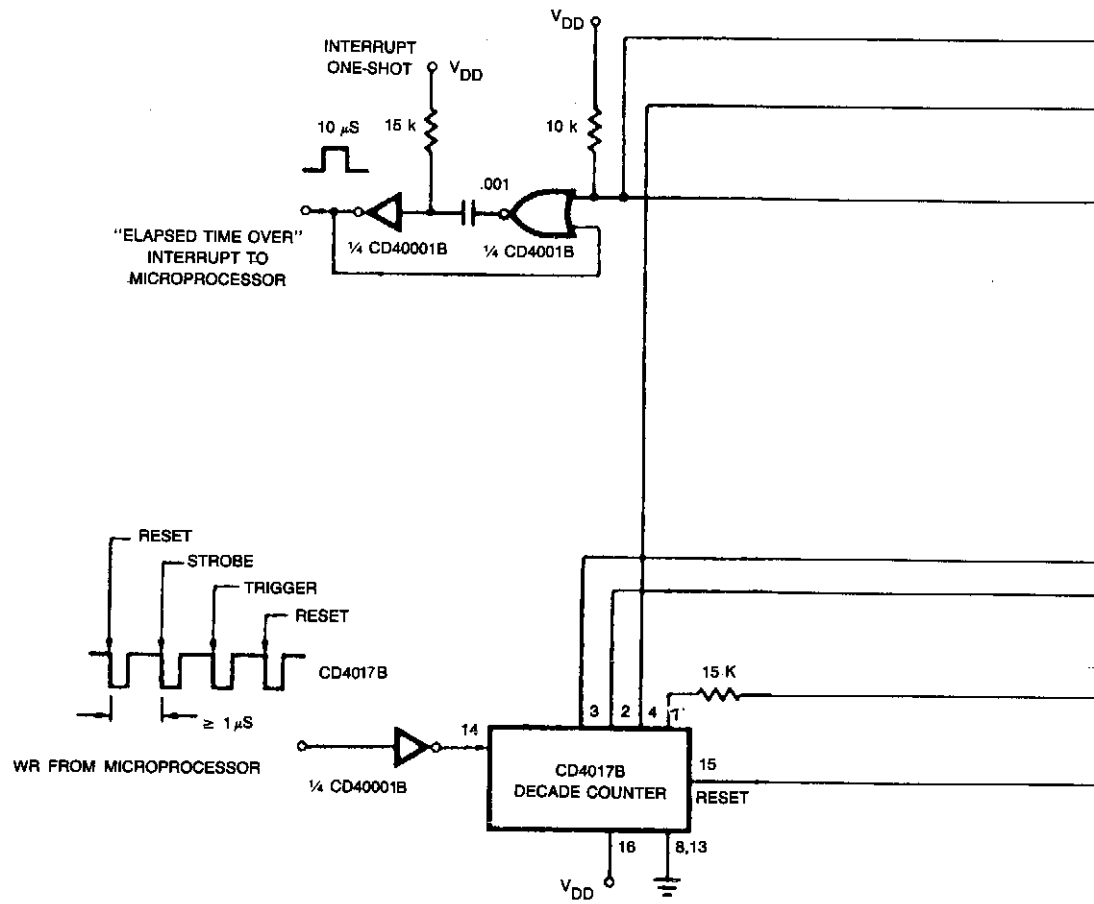

INTERSIL

Fig. 106-6

Circuit Notes

The microprocessor sends out an 8-bit binary code on its 8-bit I/O bus (the binary value needed to program the ICM7240), followed by four WRITE pulses into the CD4017B decade counter. The first pulse resets the 8-bit latch, the second strobes the binary value into the 8-bit latch, the third triggers the ICM7240 to begin its timing cycle and the fourth resets the decade counter. The ICM7240 then counts the interval of time

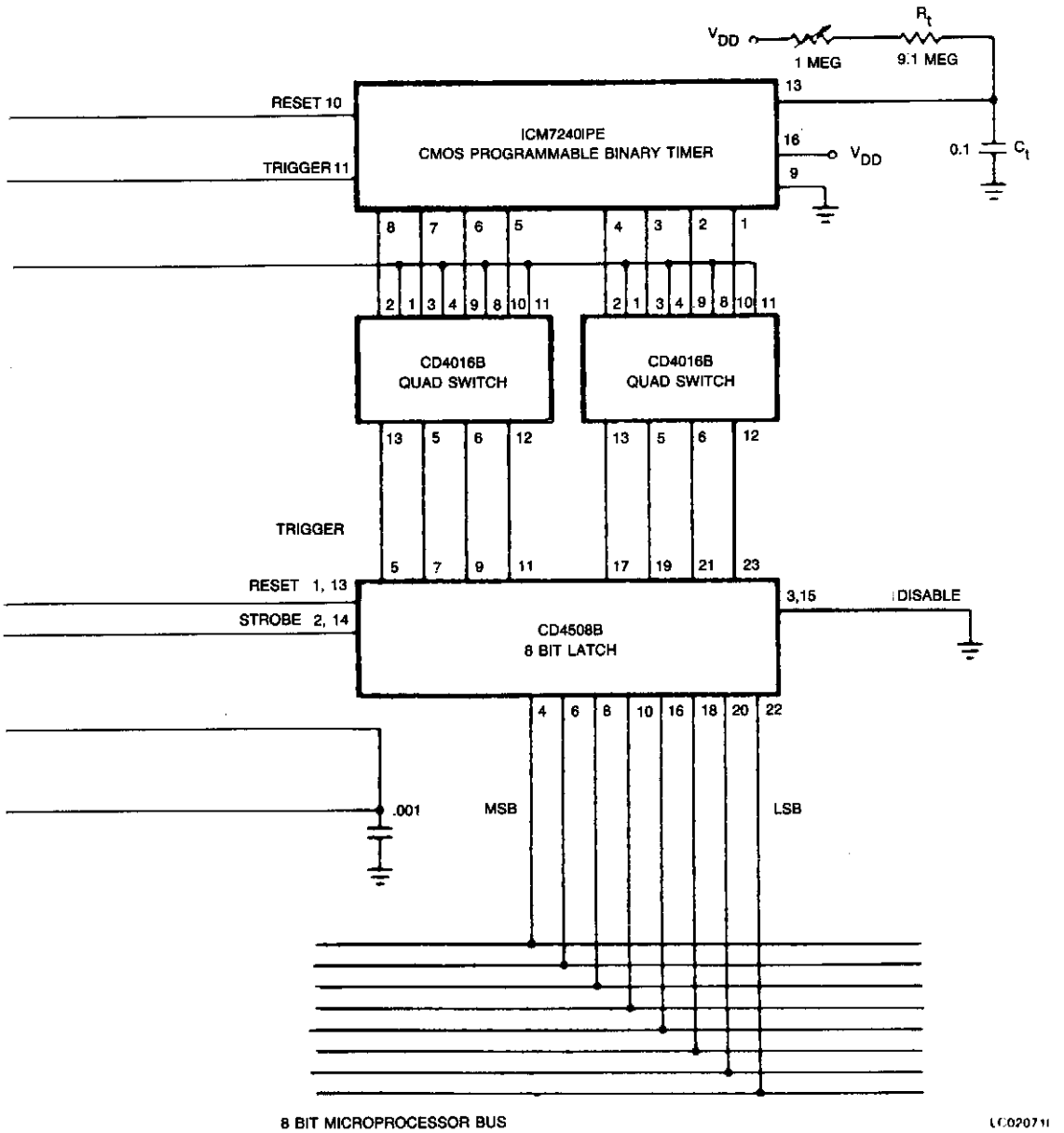

determined by the R-C value on pin 13, and the programmed binary count on pins 1 through 8. At the end of the programmed time interval, the interrupt one-shot is triggered, informing the microprocessor that the programmed time interval is over. With a resistor of approximately 10 M ohm and a can capacitor of 0.1 μF, the time base of the ICM7240 is one second. Thus, a time of 1-255 seconds can be programmed by the microprocessor, and by varying R or C, longer or shorter time bases can be selected.

PRECISION ELAPSED TIME/COUNTDOWN TIMER

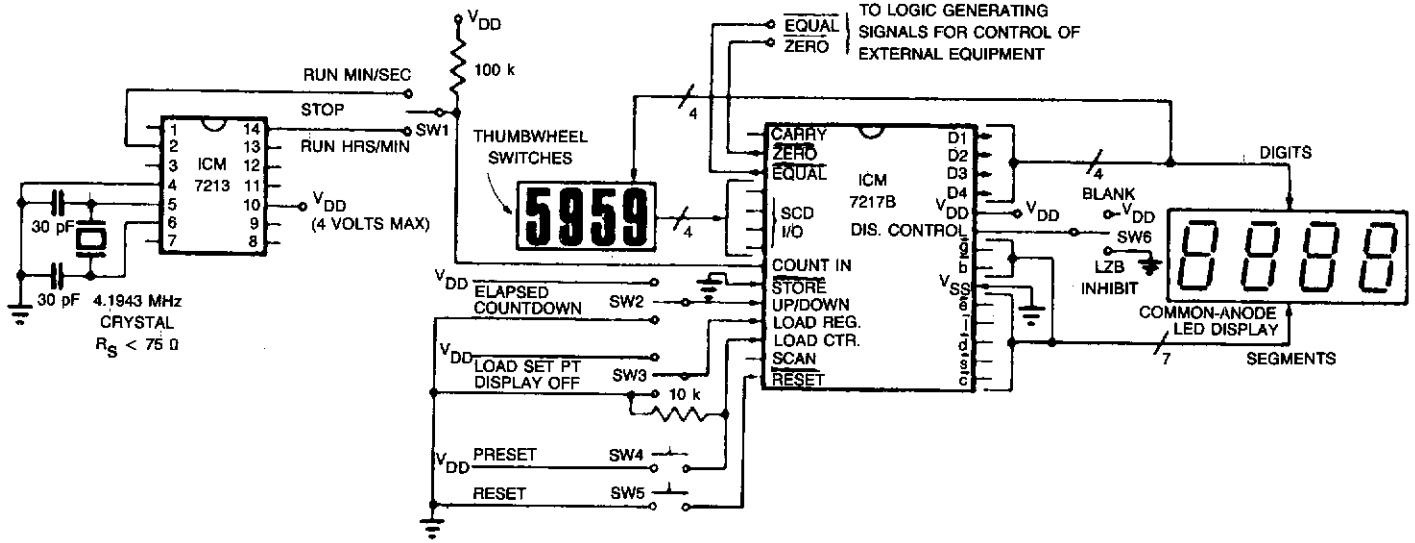

INTERSIL

Fig. 106-7

Circuit Notes

The circuit uses an ICM7213 precision one minute/one second timebase generator using a 4.1943 MHz crystal for generating pulses counted by an ICM7217B. The thumbwheel switches allow a starting time to be entered into the counter for a preset-countdown type timer, and allow the register to be set for compare functions. For instance, to make a 24-hour clock with BCD output the register can be preset with 2400 and the EQUAL output used to reset the counter. Note the 10 k resistor connected between the LOAD COUNTER terminal and ground. This resistor pulls the LOAD COUNTER input low when not loading, thereby inhibiting the BCD output drivers. This resistor should be eliminated and SW4 replaced with an SPDT center-off switch if the BCD outputs are to be used.

ADJUSTABLE AC TIMER .2 TO 10 SEC.

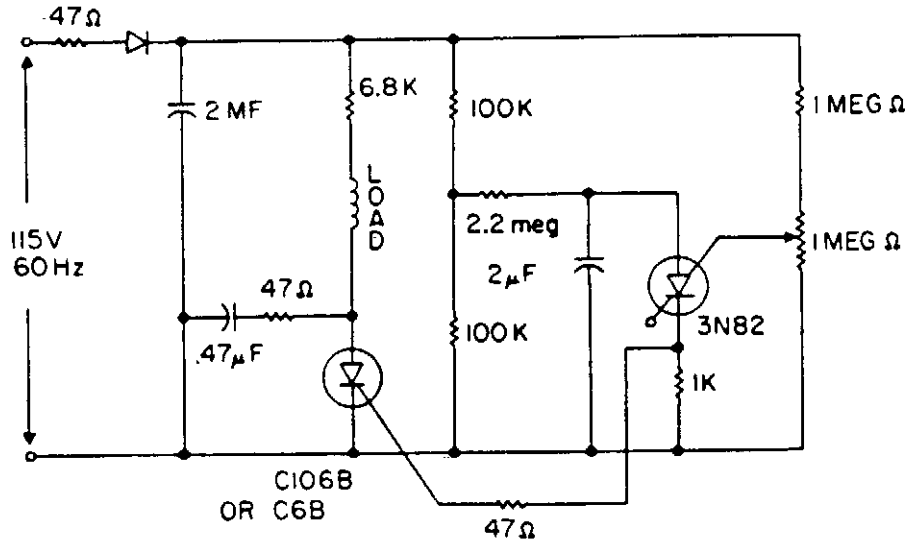

GENERAL ELECTRIC

Fig. 106-8

107

Tone Control Circuits

The sources of the following circuits are contained in the Sources section beginning on page 694. The figure number contained in the box of each circuit correlates to the source entry in the Sources section.

Guitar Treble Boost
Tone Control
Ten Band Graphic Equalizer, Using Active Filters
Tone-Control Audio Amplifier
Mike Preamp with Tone Control
Low Cost High-Level Preamp and Tone Control Circuit
Passive Tone-Control Circuit

GUITAR TREBLE BOOST

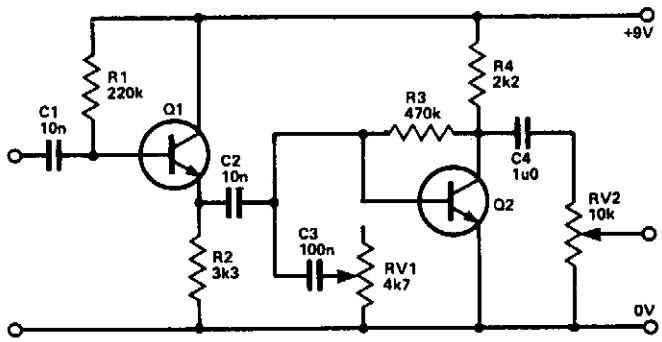

ELECTRONICS TODAY INTERNATIONAL

Fig. 107-1

Circuit Notes

Q1 is connected as an emitter follower in order to present a high input impedance to the guitar. C2, being a relatively low capacitance, cuts out most of the bass, and C3 with RV1 acts as a simple tone control to cut the treble, and hence the amount of treble boost can be altered. Q2 is a simple preamp to recover signal losses in C2, C3, and RV1.

TONE CONTROL

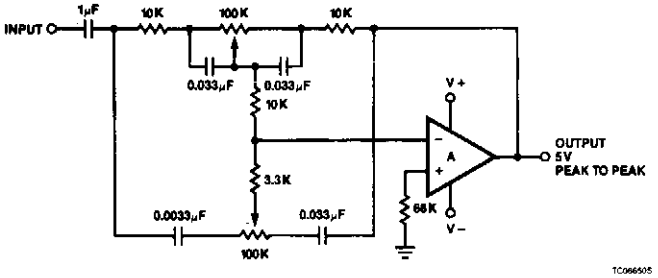

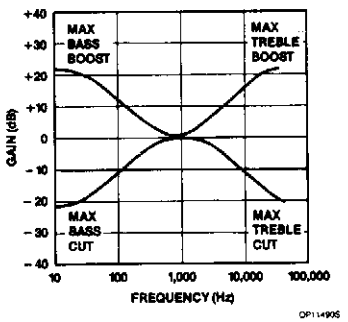

NOTES:
1. Amplifier A may be a NE531 or 301. Frequency compensation, as for unity gain non-inverting amplifiers, must be used.
2. Turn-over frequency — 1kHz.
3. Bass boost + 20dB at 20Hz, bass cut - 20dB at 20Hz, treble boost + 19dB at 20Hz, treble cut - 19dB at 20Hz.

All resistor values are in ohms.

SIGNETICS

Fig. 107-2

Circuit Notes

Tone control of audio systems involves altering the flat response in order to attain more low frequencies or more high ones, dependent upon listener preference. The circuit provides 20 dB of bass or treble boost or cut as set by the variable resistance. The actual response of the circuit is shown also.

TEN BAND GRAPHIC EQUALIZER, USING ACTIVE FILTERS

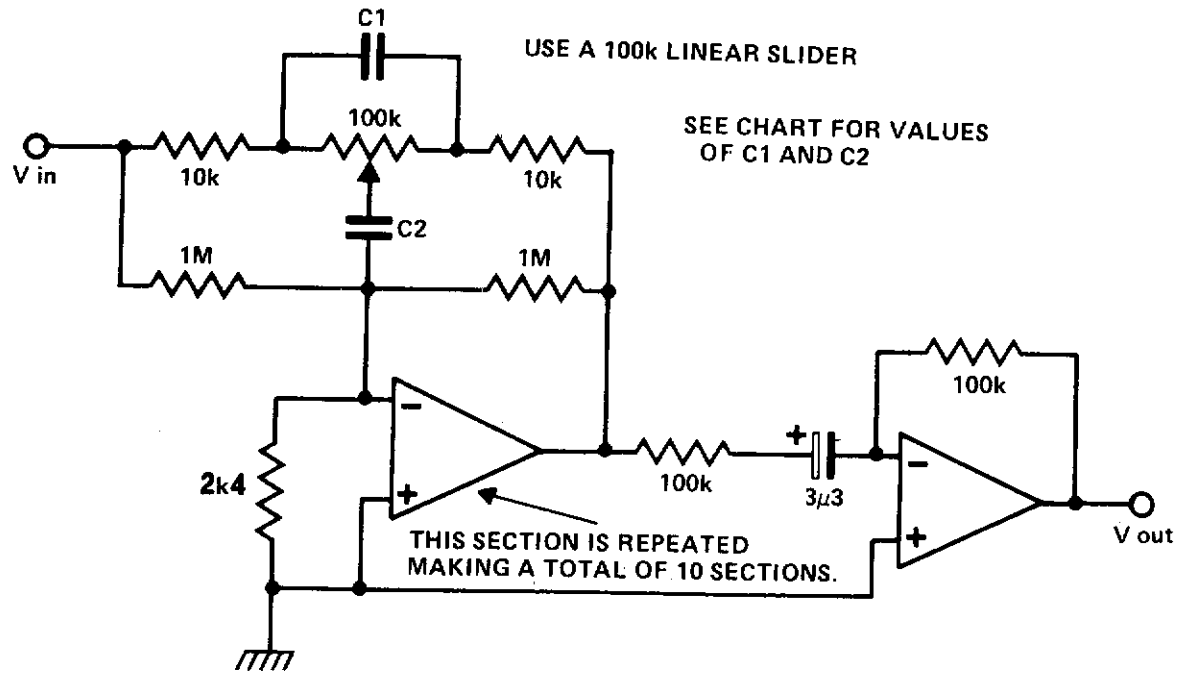

ELECTRONICS TODAY INTERNATIONAL

Fig. 107-3

CHANNEL CENTRE FREQ. IN Hz	C1	C2
32	180n	18n
64	100n	10n
125	47n	4n7
250	22n	2n2
500	12n	1n2
1000	5n6	560p
2000	2n7	270p
4000	1n5	150p
8000	680p	68p
16000	360p	36p

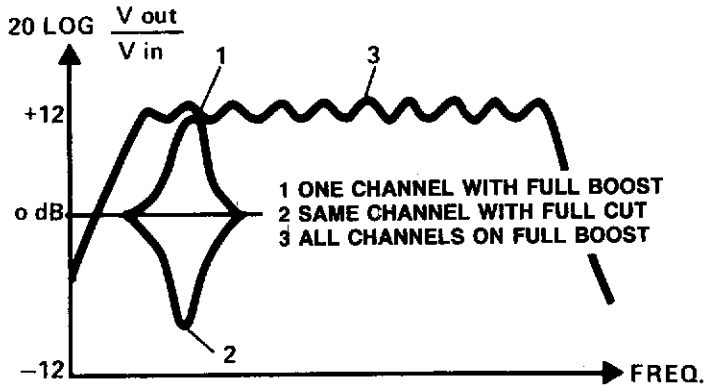

Circuit Notes

The above circuit is repeated ten times. Use the table to calculate values.

TONE-CONTROL AUDIO AMPLIFIER

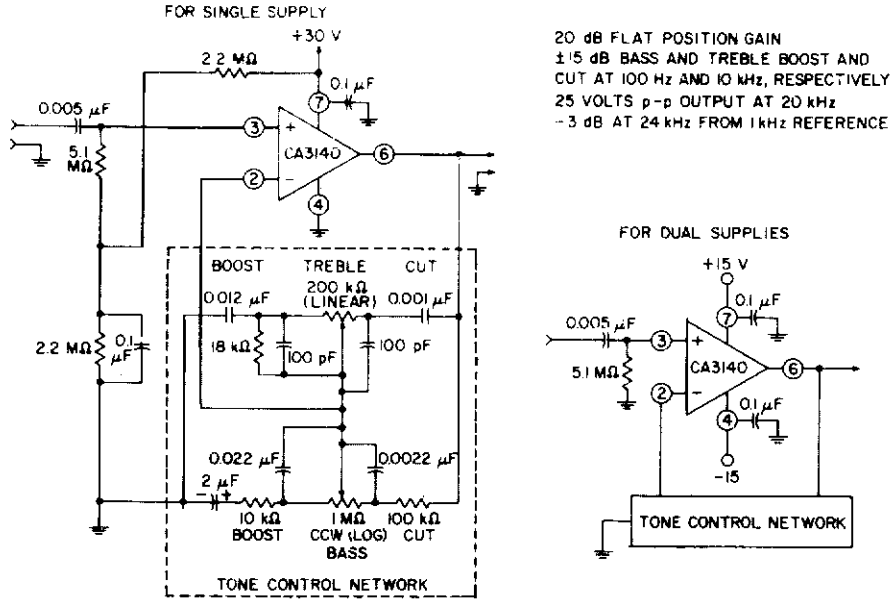

GENERAL ELECTRIC/RCA

Fig. 107-4

Circuit Notes

The circuit makes excellent use of the high slew rate, wide bandwidth, high input impedance, and high-output voltage capability of the CA3140 BiMOS op amp. The wideband gain of this circuit is equal to the ultimate boost or cut plus one, in this case a gain of eleven. For 20-dB boost or cut, input loading is essentially equal to the resistance from terminal 3 to ground.

MIKE PREAMP WITH TONE CONTROL

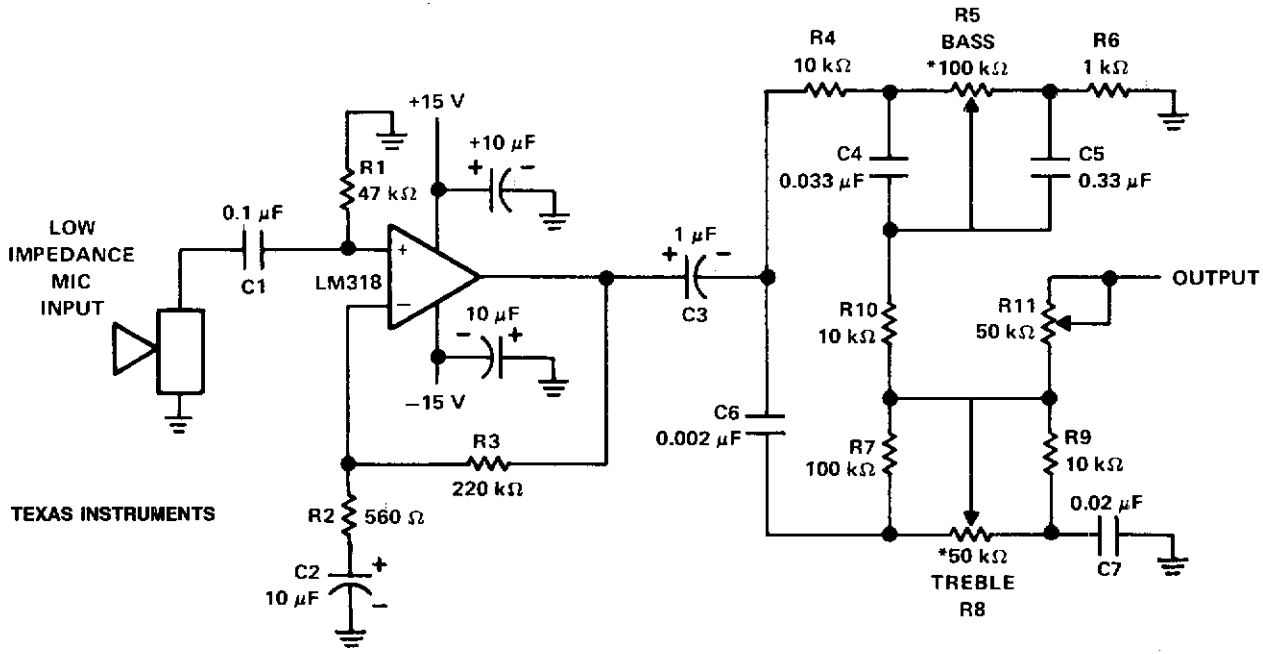

*THE TONE CONTROLS ARE AUDIO TAPER (LOG) POTENTIOMETERS.

Fig. 107-5

Circuit Notes

The LM318 op amp is operated as a standard non-inverting amplifier. Resistor R1 (47 k ohm) provides an input path to ground for the bias current of the non-inverting input. The combination of R2 (560 ohm) and C2 (10 μF) provides a frequency roll-off below 30 Hz. At 30 Hz and above the gain is relatively flat at about 50 dB, set by the ratio R3/R2. R3 (200 k ohm) furnishes negative feedback from the output to the inverting input of the op amp. C3 (1.0 μF electrolytic) ac couples the preamp to the tone control section. The top half of the tone control section is the bass control. The bottom half controls the treble frequency response. These tone controls (R5 and R8) require audio taper (logarithmic) potentiometers. The 50 k ohm potentiometer on the output can be used to set the output or gain of the preamp.

LOW COST HIGH-LEVEL PREAMP AND TONE CONTROL CIRCUIT

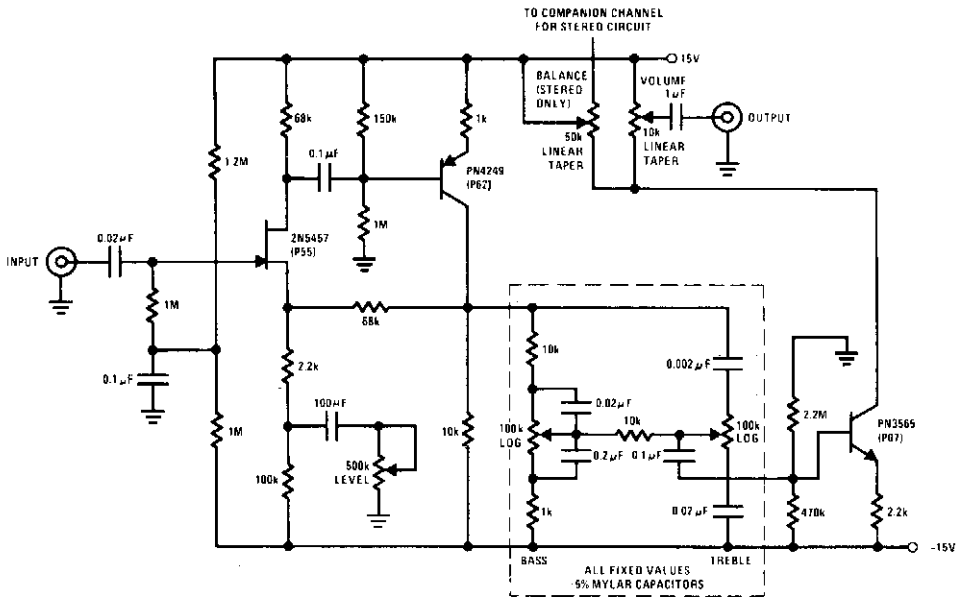

NATIONAL SEMICONDUCTOR CORP.

Fig. 107-6

Circuit Notes

This preamp and tone control uses the JFET to its best advantage; as a low noise high input impedance device. All device parameters are noncritical, yet the circuit achieves harmonic distortion levels of less than 0.05% with a S/N ratio of over 85 dB. The tone controls allow 18 dB of cut and boost; the amplifier has a 1-V output for 100-mV input at maximum level.

PASSIVE TONE-CONTROL CIRCUIT

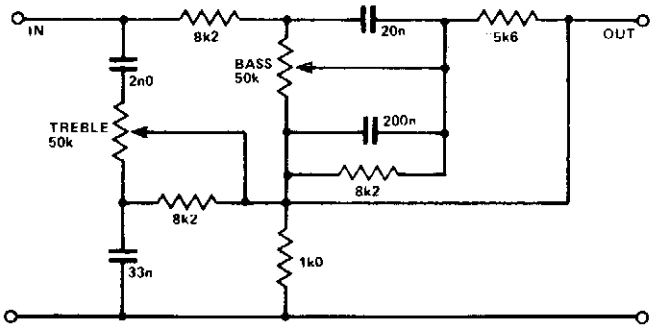

ELECTRONICS TODAY INTERNATIONAL *Fig. 107-7*

Circuit Notes

A simple circuit using two potentiometers and easily available standard value components provides tone control. The impedance level is suitable for low-level transistor or op amp circuitry.

108

Touch-Switch Circuits

The sources of the following circuits are contained in the Sources section beginning on page 694. The figure number contained in the box of each circuit correlates to the source entry in the Sources section.

Touch On/Off Switch
Touch Switch
Touchomatic

TOUCH ON/OFF SWITCH

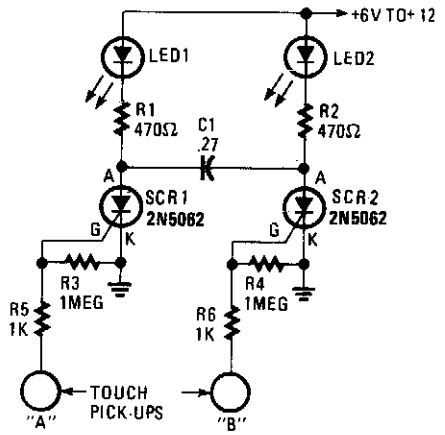

HANDS-ON ELECTRONICS *Fig. 108-1*

Circuit Notes

If a Touch On/Off Switch is desired, this circuit fills the bill. Two sensitive gate SCRs are interconnected, so that when one of the devices is turned on, the other (if on) is forced off. That toggling effect gives an on/off circuit condition for each of the LEDs in the SCR-anode circuits. To turn LED1 on and LED2 off, simply touch the "A" terminal, and to turn LED1 off and LED2 on, the "B" pick-up must be touched. It is possible to simultaneously touch both terminals, causing both SCRs to turn on together. To reset the circuit to the normal one-on/one-off condition, momentarily interrupt the circuit's dc power source. Additional circuitry can be connected to the anode circuit of either or both SCRs to be controlled by the on/off function of the touch switch.

TOUCH SWITCH

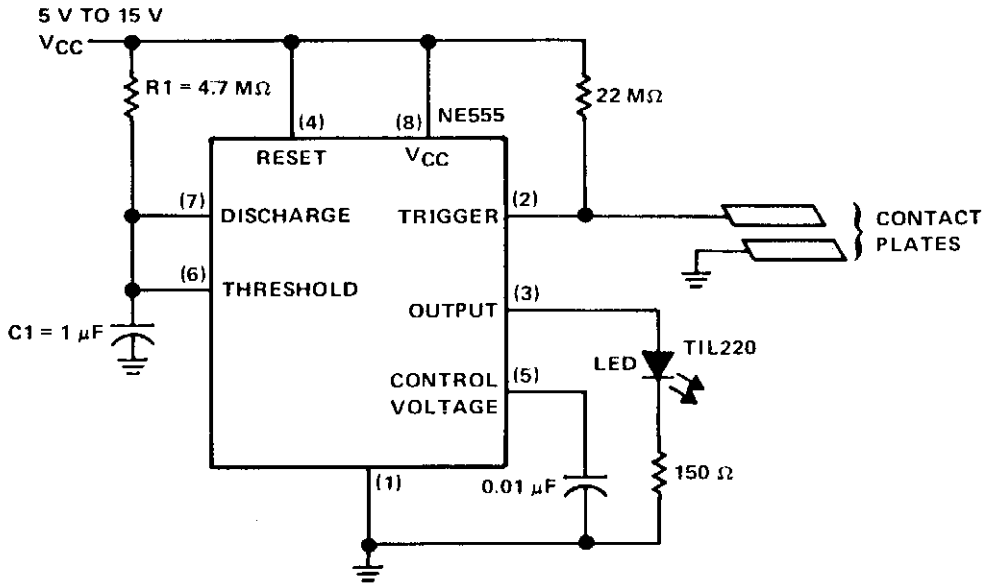

TEXAS INSTRUMENTS

Fig. 108-2

Circuit Notes

The circuit is basically a NE555 monostable, the only major difference being its method of triggering. The trigger input is biased to a high value by the 22 M ohm resistor. When the contact plates are touched, the skin resistance of the operator will lower the overall impedance from pin 2 to ground. This action will reduce the voltage at the trigger input to below the ⅓ V_{CC} trigger threshold and the timer will start. The output pulse width will be T = 1.1 R1C1, in this circuit about 5 seconds. A relay connected from pin 3 to ground instead of the LED and resistor could be used to perform a switching function.

TOUCHOMATIC

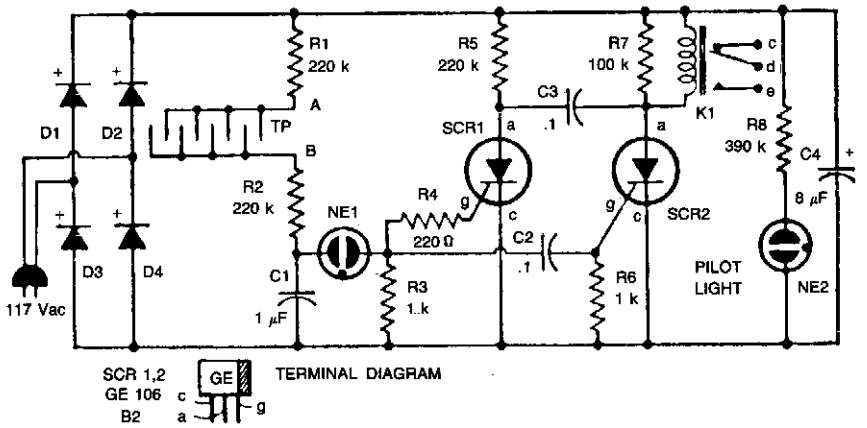

TAB BOOKS, INC.

Fig. 108-3

Circuit Notes

When someone touches the touchplate (TP), the resistance of his finger across points A and B is added in series to the combination of R1 and R2, the capacitor C2 begins to charge. When the voltage across C1 is finally sufficient to fire NE1, C1 will begin to discharge. When NE1 fires, it produces a short between its terminals. Since R3 is connected across C1, they are effectively in series after NE1 fires. A voltage spike will then be passed by C2 and this will act as a positive triggering pulse. The pulse is fed to both SCR gates: SCR2 conducts, thereby closing relay K1. With a finger no longer on the touchplate, no more pulses are forthcoming because the C1 charge path is open. The next contact with the touchplate will produce a pulse which triggers SCR1. SCR2 is now off by capacitor C3 which was charged by current passing through R6 and SCR2. The firing of SCR1 in this way places a negative voltage across SCR2 which momentarily drops the relay current to a point below the holding current value of SCR2. (Holding current is the minimum current an SCR requires to remain in a conducting state once its gate voltage is removed.) With SCR2 turned off, the relay will open and SCR1 will turn off due to the large resistance in series with its anode. Starved in this way SCR1 turns off because of a forced lack of holding current.

Sources Index

Chapter 1

Fig. 1-1. Signetics 1987 Linear Data Manual Vol. 2, 2/87, p.7-65.

Fig. 1-2. General Electric Application Note 90.16, p. 25.

Fig. 1-3. Courtesy, William Sheets.

Fig. 1-4. General Electric Application Note 90.16, p. 25.

Fig. 1-5. General Electric/RCA, BiMOS Operational Amplifiers Circuit Ideas, 1987, p. 27.

Fig. 1-6. R-E Experimenters Handbook, p. 157.

Chapter 2

Fig. 2-1. Linear Technology Corporation, Linear Applications Handbook, 1987, p. AN21-2

Fig. 2-2. Linear Technology Corporation, Linear Databook Supplement, 1988, p. S2-34.

Fig. 2-3. Siliconix, Integrated Circuits Data Book, 3/85, p. 10-154.

Fig. 2-4. Linear Technology Corp., Linear Databook, 1986, p. 2-83.

Fig. 2-5. National Semiconductor Corp., Transistor Databook, 1982, p. 11-23.

Fig. 2-6. Linear Technology Corp., Linear Applications Handbook, 1987, p. AN21-1.

Fig. 2-7. Signetics, 1987 Linear Data Manual, Vol. 2: Industrial, 10/86, p. 4-260.

Fig. 2-8. Electronic Engineering, 11/86, p. 40.

Fig. 2-9. National Semiconductor Corp., Transistor Databook, 1982, p. 11-25.

Fig. 2-10. Siliconix, Integrated Circuits Data Book, 3/85, p. 2-112.

Fig. 2-11. Electronics Engineering, 9/78, p. 17.

Fig. 2-12. Electronics Engineering, 9/84, p. 33.

Fig. 2-13. Signetics, 1987 Linear Data Manual, Vol. 1: Communications, 8/87, p. 4-346.

Fig. 2-14. NASA Tech Briefs, Spring 1983, p. 244.

Fig. 2-15. Radio Electronics, 7/83, p. 74.

Fig. 2-16. Motorola Inc., Linear Integrated Circuits, 1979, p. 6-58.

Fig. 2-17. MR-E Experimenters Handbook, p. 158.

Fig. 2-19. Popular Electronics, 8/68.
Fig. 2-20. Ham Radio, 9/84, p. 24.
Fig. 2-21. General Electric/RCA, BiMOS Operational Amplifiers Circuit Ideas, 1987, p. 20.
Fig. 2-22. Texas Instruments, Linear and Interface Circuits Applications, Vol. 1, 1985, p. 3-2, 3-4.
Fig. 2-23. Signetics, 1987 Linear Data Manual Vol. 1: Communications, 3/87, p. 4-345.
Fig. 2-24. Electronic Engineering, 11/85, p. 32.
Fig. 2-25. NASA Tech Briefs, Sept/Oct 1986, p. 43.

Chapter 3

Fig. 3-1. Intersil, Component Data Catalog, 1987, p. 4-43.
Fig. 3-2. Linear Technology, Application Note 9, p. 16.
Fig. 3-3. General Electric/RCA, BiMOS Operational Amplifiers Circuit Ideas, 1987, p. 26.
Fig. 3-4. Linear Technology Corp., Linear Applications Handbook, 1987, p. AN15-2.
Fig. 3-5. Linear Technology Corp., Linear Databook, 1986, p. 5-17.
Fig. 3-6. Signetics, 1987 Linear Data Manual, Vol. 2: Industrial, 11/86, p. 5-215.
Fig. 3-7. National Semiconductor Corp., 1984 Linear Supplement Databook, p. S5-126.
Fig. 3-8. Signetics, 1987 Linear Data Manual Vol. 2: Industrial, 12/86, p. 4-67.

Chapter 4

Fig. 4-1. Electronic Design, 5/82, p. 214.
Fig. 4-2. R-E Experimenters Handbook, p. 160.
Fig. 4-3. Popular Electronics, 11/73, p. 50.

Chapter 5

Fig. 5-1. Hands-On Electronics, Summer 1984, p. 77.
Fig. 5-2. Courtesy, William Sheets.
Fig. 5-3. Courtesy, William Sheets.
Fig. 5-4. Electronic Engineering, 5/84, p. 44
Fig. 5-5. Texas Instruments, Linear and Interface Circuits Applications, vol. 1, 1985, p. 3-13.
Fig. 5-6. Electronics Today International, 4/85, p. 82.

Chapter 6

Fig. 6-1. Tab Books Inc., 101 Sound, Light, and Power IC Projects.
Fig. 6-2. Radio Electronics, 7/70, p. 38.
Fig. 6-3. Hands-On Electronics, Jul/Aug 1986, p. 16.
Fig. 6-4. 73 Magazine, 12/76, p. 170.
Fig. 6-5. General Electric/RCA, BiMOS Operational Amplifiers Circuit Ideas, 1987, p. 21.
Fig. 6-6. Ibid.
Fig. 6-7. Texas Instruments, Linear and Interface Circuits Applications, Vol. 1, 1985, p. 3-17.
Fig. 6-8. Signetics, Analog Data Manual, 1982, p. 3-90.

Chapter 7

Fig. 7-1. Motorola, TMOS Power FET Design Ideas, 1985.
Fig. 7-2. Hands-On Electronics, 4/87, p. 95.
Fig. 7-3. Tab Books, Inc., The Giant book of Easy-To-Build Electronics Projects, 1982, p. 196.
Fig. 7-4. General Electric, Optoelectronics, Third Edition, p. 151.
Fig. 7-5. Tab Books, Inc., The Build-It Book of Electronic Projects, No. 1498, p. 28.
Fig. 7-6. Radio-Electronics, 6/85, p. 60.
Fig. 7-7. Popular Electronics, 12/74, p. 6.
Fig. 7-8. Popular Electronics, 4/75, p. 68.
Fig. 7-9. Texas Instruments, Linear and Interface Circuits Applications, 1987, p. 10-21.
Fig. 7-10. Texas Instruments, Linear and Interface Circuits Applications, 1985, vol. 1, p. 3-5.
Fig. 7-11. Radio-Electronics, 1979.
Fig. 7-12. Hands-On Electronics, 1/87, p. 30.
Fig. 7-13. Electronic Engineering, 12/75, p. 9.
Fig. 7-14. Electronic Design 18, 9/76, p. 114.
Fig. 7-15. Radio-Electronics, 5/87, p. 10.
Fig. 7-16. Hands-On Electronics, Fall 1984, p. 45.
Fig. 7-17. Hands-On Electronics, 4/87, p. 92.
Fig. 7-18. General Electric, Optoelectronics, Third Edition, p. 105.

Chapter 8

Fig. 8-1. CQ, 7/82, p. 18.
Fig. 8-2. Electronics Design, 7/76, p. 120.
Fig. 8-3. Courtesy, William Sheets.
Fig. 8-4. Moli Energy Limited.
Fig. 8-5. Linear Technology Corp., Linear Applications Handbook, 1987, p. AN6-3.
Fig. 8-6. Courtesy, William Sheets.
Fig. 8-7. Texas Instruments, Linear and Interface Circuits Applications, Vol. 1, p. 6-24.
Fig. 8-8. Linear Technology Corp., Linear Databook Supplement, 1988, p. S5-11.
Fig. 8-9. Motorola, TMOS Power FET Design Ideas, 1985, p. 8.
Fig. 8-10. Radio Electronics, 9/85, p. 44.
Fig. 8-11. Siliconix, MOSpower Applications Handbook, p. 6-176.

Chapter 9

Fig. 9-1. Motorola, TMOS Power FET Ideas, 1985, p. 7.
Fig. 9-2. Electronic Engineering, 2/85, p. 45.
Fig. 9-3. Electronic Engineering, 10/70, p. 17.
Fig. 9-4. Electronic Engineering, Mid5/78, p. 11.
Fig. 9-5. Moli Energy Limited, Publication MEL-126.
Fig. 9-6. Linear Technology Corp., Linear Databook, 1986, p. 2-104.
Fig. 9-7. Courtesy, William Sheets.
Fig. 9-8. Tab Books, Inc., 101 Sound, Light, and Power IC Projects.

Chapter 10

Fig. 10-1. Signetics, 1987 Linear Data Manual, Vol. 2: Industrial, 2/87, p. 5-367.
Fig. 10-2. Texas Instruments, Linear and Interface Circuits Applications, Vol. 1, 1985, p. 3-3, 3-4.
Fig. 10-3. Courtesy, William Sheets.
Fig. 10-4. General Electric/RCA, BiMOS Operational Amplifiers Circuit Ideas, 1987, p. 17.
Fig. 10-5. Siliconix, Small-Signal FET Data Book, 1/86, p. 7-29.
Fig. 10-6. Linear Technology Corp., Linear Databook, 1986, p. 2-83.
Fig. 10-7. Linear Technology Corp., Linear Databook, 1986, p. 2-101.

Chapter 11

Fig. 11-1. Signetics, 1987 Linear Data Manual, Vol. 1: Communications, 2/87, p. 4-312.
Fig. 11-2. Electronic Engineering, 5/86, p. 50.
Fig. 11-3. Electronic Design, 9/73, p. 148.
Fig. 11-4. Intersil, Component Data Catalog, 1987, p. 6-28.
Fig. 11-5. Signetics, 555 Timers, 1973, p. 19.

Chapter 12

Fig. 12-1. Texas Instruments, Linear and Interface Circuits Applications, Vol. 1, 1985, p. 7-21.
Fig. 12-2. Electronic Engineering, 2/85, p. 34.

Chapter 13

Fig. 13-1. Hands-On Electronics, 3/87, p. 25.
Fig. 13-2. Motorola, TMOS Power FET Design Ideas, 1985, p. 17.
Fig. 13-3. Linear Technology Corp., Linear Applications Handbook, 1987, p. AN13-23.
Fig. 13-4. Intersil, Component Data Catalog, 1987, p. 5-113.
Fig. 13-5. Courtesy, William Sheets.
Fig. 13-6. Linear Technology Corp., Linear Databook, 1986, p. 3-23.
Fig. 13-7. Motorola, Thyristor Device Data, Series A, 1985, p. 1-6-57.

Chapter 14

Fig. 14-1. Electronic Engineering, 3/78, p. 38.
Fig. 14-2. Hands-On Electronics, Nov/Dec 1985, p. 4.

Chapter 15

Fig. 15-1. Linear Technology Corp., Linear Databook, 1986, p. 2-82.
Fig. 15-2. Popular Electronics, 9/77, p. 92.
Fig. 15-3. Signetics, 1987 Linear Data Manual Vol. 2: Industrial, 11/86, p. 5-269.
Fig. 15-4. Siliconix, Integrated Circuits Data Book, 3/85, p. 5-8.
Fig. 15-5. Electronic Engineering, 2/85, p. 45.
Fig. 15-6. Electronic Engineering, 2/84, p. 36.
Fig. 15-7. Electronic Design 15, 7/79, p. 120.
Fig. 15-8. Electronic Engineering, 12/78, p. 17.

Fig. 15-9. General Electric/RCA, BiMOS Operational Amplifiers Circuit Ideas, 1987, p. 23.
Fig. 15-10. Electronic Engineering, 11/86, p. 39.
Fig. 15-11. Popular Electronics, 3/79, p. 77.
Fig. 15-12. Electronic Engineering, 7/86, p. 27.
Fig. 15-13. Electronic Engineering, 1/86, p. 37.

Chapter 16

Fig. 16-1. Signetics, 1987 Linear Data Manual Vol. 2: Industrial, 11/86, p. 5-215.
Fig. 16-2. Linear Technology Corp., Linear Databook, 1986, p. 4-15.
Fig. 16-3. Siliconix, Integrated Circuits Data Book, 3/85, p. 2-207.
Fig. 16-4. Siliconix, Integrated Circuits Data Book, 3/85, p. 2-231.
Fig. 16-5. Intersil, Component Data Catalog, 1987, p. 13-51.
Fig. 16-6. Siliconix, Integrated Circuits Data Book, 3/85, p. 3-62.
Fig. 16-7. Datel, Data Conversion Components, p. 4-37.

Chapter 17

Fig. 17-1. Signetics, 1987 Linear Data Manual Vol. 2: Industrial, 2/87, p. 7-62.
Fig. 17-2. Signetics, 1987 Linear Data Manual Vol. 2: Industrial, 11/86, p. 4-136.
Fig. 17-3. Signetics, 1987 Linear Data Manual Vol. 2: Industrial, 11/86, p. 5-269.
Fig. 17-4. Electronic Engineering, 12/77, p. 19.
Fig. 17-5. Siliconix, Integrated Circuits Data Book, 3/85, p. 5-17.
Fig. 17-6. Linear Technology Corp., Linear Databook, 1986, p. 5-17.
Fig. 17-7. Analog Devices, Data Acquisition Databook, 1982, p. 4-56.
Fig. 17-8. Signetics, 1987 Linear Data Manual Vol. 1: Communications, 2/87, p. 4-311.
Fig. 17-9. General Electric/RCA, BiMOS Operational Amplifiers Circuit Ideas, 1987, p. 20.
Fig. 17-10. General Electric/RCA, BiMOS Operational Amplifiers Circuit Ideas, 1987, p. 11.
Fig. 17-11. Siliconix, MOSpower Applications Handbook, p. 6-178.
Fig. 17-12. Signetics, 1987 Linear Data Manual Vol. 2: Industrial, 2/87, p. 5-368.
Fig. 17-13. National Semiconductor Corp., Transistor Databook, 1982, p. 7-27.
Fig. 17-14. National Semiconductor Crop., 1984 Linear Supplemental Databook, p. S5-142.
Fig. 17-15. Electronic Engineering, 8/83, p. 141.

Chapter 18

Fig. 18-1. Intersil, Component Data catalog, 1987, p. 14-70.
Fig. 18-2. General Electric, Application Note 90.16, p. 29.
Fig. 18-3. General Electric, Application Note 90.16, p. 29.
Fig. 18-4. General Electric, Application Note 90.16, p. 28.
Fig. 18-5. Intersil, Component Data Catalog, 1987, p. 14-91.
Fig. 18-6. Intersil, Component Data Catalog, 1987, p. 7-96.
Fig. 18-7. Intersil, Component Data Catalog, 1987, p. 14-121.
Fig. 18-8. Intersil, Databook 1987, p. 7-47.

Chapter 19

Fig. 19-1. Ham Radio, 6/85, p. 23.
Fig. 19-2. Siliconix, MOSpower Design Catalog, 1/83, p. 5-27.
Fig. 19-3. Linear Technology Corp., Linear Databook, 1986, p. 2-104.
Fig. 19-4. QST, 12/85, p. 38.
Fig. 19-5. Linear Technology Corp., Linear Applications Handbook 1987, p. AN20-12.
Fig. 19-6. QST, 2/28, p. 43.
Fig. 19-7. Ham Radio, 2/79, p. 40.
Fig. 19-8. Courtesy, William Sheets.
Fig. 19-9. Courtesy, William Sheets.
Fig. 19-10. Electronic Design 21, 10/75, p. 98.
Fig. 19-11. Ham Radio, 2/79, p. 40.
Fig. 19-12. Ham Radio, 2/79, p. 42.
Fig. 19-13. Tab Books, Inc., The Complete Handbook of Amplifiers, Oscillators, and Multivibrators, No. 1230, p. 328.
Fig. 19-14. Signetics, 1987 Linear Data Manual Vol. 2: Industrial, 11/86, p. 5-269.

Fig. 19-15. Motorola, MECL System Design Handbook, 1983, p. 227.
Fig. 19-16. Electronic Design, 11/69, p. 109.
Fig. 19-17. QST, 1/86, p. 40.
Fig. 19-18. R-E Experimenters Handbook, p. 157.
Fig. 19-19. Electronic Design 23, 11/74, p. 148.

Chapter 20

Fig. 20-1. Linear Technology Corp., 1986 Linear Databook, p. 2-57.
Fig. 20-2. Linear Technology Corp., Linear Applications Handbook, 1987, p. AN3-13.
Fig. 20-3. Intersil, Component Data Catalog, 1987, p. 7-4.
Fig. 20-4. NASA Tech Briefs, Jul/Aug 1986, p. 37.
Fig. 20-5. General Electric/RCA, BiMOS Operational Amplifiers Circuit Ideas, 1987, p. 17.
Fig. 20-6. Linear Technology Corp., Linear Databook, 1986, p. 2-85.
Fig. 20-7. General Electric/RCA, BiMOS Operational Amplifiers Circuit Ideas, 1987, p. 14.

Chapter 21

Fig. 21-1. EXAR, Telecommunications Databook, 1986, p. 9-23.
Fig. 21-2. National Semiconductor Corp., Audio/Radio Handbook, 1980, p. 3-17.
Fig. 21-3. Signetics, 1987 Linear Data Manual, Vol. 1: Communications, 2/87, p. 4-66.
Fig. 21-4. Signetics, 1987 Linear Data Manual Vol. 1: Communications, 11/86, p. 4-263.

Chapter 22

Fig. 22-1. Radio-Electronics, 12/86, p. 57.
Fig. 22-2. Radio-Electronics, 8/87, p. 63.
Fig. 22-3. Radio-Electronics, 8/87, p. 53.
Fig. 22-4. Radio-Electronics, 6/87, p. 12.
Fig. 22-5. EXAR, Telecommunications Databook, 1986, p. 9-23.
Fig. 22-6. Radio-Electronics, 3/86, p. 51.
Fig. 22-7. Signetics, 1987 Linear Data Manual Vol. 1: Communications, 11/86, p. 7-123.
Fig. 22-8. Signetics, 1987 Linear Data Manual Vol. 1: Communications, 11/86, p. 7-123.
Fig. 22-9. Signetics, 1987 Linear Data Manual Vol. 1: Communications, 11/86, p. 4-295.

Chapter 23

Fig. 23-1. General Electric, Application Note 90.16, p. 26.
Fig. 23-2. Siliconix, Integrated Circuits Data Book, 3/85, p. 5-16.
Fig. 23-3. Texas Instruments, Linear and Interface Circuits Applications, Vol. 1, 1985, p. 3-23.
Fig. 23-4. General Electric/RCA, BiMOS Operational Amplifiers Circuit Ideas, 1987, p. 18.
Fig. 23-5. Intersil, Component Data Catalog, 1987, p. 7-44.
Fig. 23-6. Electronic Engineering, 11/86, p. 39.
Fig. 23-7. General Electric, Application Note 90.16, p. 27.
Fig. 23-8. Signetics, 1987 Linear Data Manual Vol. 2: Industrial, 2/87, p. 5-367.
Fig. 23-9. Intersil, Component Data Catalog, 1987, p. 5-112.
Fig. 23-10. GENERAL Electric, Application Note 90.16, p. 26.

Chapter 24

Fig. 24-1. Electronic Engineering, 8/85, p. 30.
Fig. 24-2. Electronic Engineering, 11/86, p. 40.

Chapter 25

Fig. 25-1. CQ, 1/87, p. 36.

Chapter 26

Fig. 26-1. General Electric/RCA, BiMOS Operational Amplifiers Circuit Ideas, 1987, p. 26.
Fig. 26-2. National Semiconductor Corp., Linear Databook, 1982, p. 171.
Fig. 26-3. Electronic Engineering, 9/84, p. 30.
Fig. 26-4. GENERAL Electric/RCA, BiMOS Operational Amplifiers Circuit Ideas, 1987, p. 12.

Chapter 27

Fig. 27-1. Motorola, TMOS Power FET Design Ideas, 1985, p. 18.
Fig. 27-2. Electronic Design, 12/87, p. 67.
Fig. 27-3. General Electric/RCA, BiMOS Operational Amplifiers Circuit Ideas, 1987, p. 22.
Fig. 27-4. Electronic Engineering, 6/78, p. 32.
Fig. 27-5. Electronic Engineering, 2/83, p. 37.

Chapter 28

Fig. 28-1. Tab Books, Inc., The Giant Book of Easy-To-Build Electronic Projects, 1982, p. 53.
Fig. 28-2. Hands-On Electronics, 2/87, p. 38.

Chapter 29

Fig. 29-1. Signetics, 1987 Linear Data Manual Vol. 2: Industrial, 11/86, p. 4-135.
Fig. 29-2. Linear Technology Corp., Linear Databook, 1986, p. 2-82.
Fig. 29-3. Signetics, 1987 Linear Data Manual Vol. 2: Industrial, 11/86, p. 4-135.
Fig. 29-4. Transistor Databook, 1982, p. 11-25.

Chapter 30

Fig. 30-1. Hands-On Electronics, May/Jun 1986, p. 52.
Fig. 30-2. Popular Electronics, 3/67.
Fig. 30-3. Courtesy, William Sheets.

Chapter 31

Fig. 31-1. Linear Technology Corp., Linear Applications Handbook, 1987, p. AN13-22.
Fig. 31-2. General Electric, Optoelectronics, Third Edition, p. 149.
Fig. 31-3. Motorola, Thyristor Device Data, Series A, 1985, p. 1-6-39.

Chapter 32

Fig. 32-1. Courtesy, William Sheets.
Fig. 32-2. Courtesy, William Sheets.
Fig. 32-3. Hands-On Electronics, 8/87, p. 65.
Fig. 32-4. Courtesy, William Sheets.
Fig. 32-5. Hands-On Electronics, 3/87, p. 27.
Fig. 32-6. Ham Radio, 9/86, p. 67.

Chapter 33

Fig. 33-1. Electronic Engineering, 10/48, p. 45.
Fig. 33-2. Electronics Today International, 10/78, p. 26.
Fig. 33-3. Hybrid Products Databook, 1982, p. 17-131.
Fig. 33-4. Siliconix, Integrated Circuits Data Book, 3/85, p. 10-62.
Fig. 33-5. Intersil, Component Data Catalog, 1987, p. 8-102.
Fig. 33-6. 73 for Radio Amateurs, 2/86, p. 10.
Fig. 33-7. Intersil, Component Data Catalog, 1987, p. 7-45.
Fig. 33-8. Linear Technology Corp., 1986 Linear Databook, p. 2-56.
Fig. 33-9. Electronic Engineering, 2/47, p. 47.
Fig. 33-10. Courtesy, William Sheets.
Fig. 33-11. Raytheon, Linear and Integrated Circuits, 1984, p. 6-205.
Fig. 33-12. Texas Instruments, Linear and Interface Circuits Applications, Vol. 1, 1985, p. 3-7.
Fig. 33-13. Motorola, Linear Integrated Circuits, 1979, p. 3-147.
Fig. 33-14. Texas Instruments, Linear and Interface Circuits Applications, Vol. 1, 1985, p. 3-9.

Chapter 34

Fig. 34-1. Motorola, Thyristor Device Data, Series A, 1985, p. 1-6-52.
Fig. 34-2. Popular Electronics, 3/81, p. 100.
Fig. 34-3. Hands-On Electronics, Spring 1986, p. 4.
Fig. 34-4. Hands-On Electronics, Fall 1984, p. 61.
Fig. 34-5. General Electric, SCR Manual, Fourth Edition, p. 85.
Fig. 34-6. Electronic Design 65, 3/73, p. 84.
Fig. 34-7. Electronic Design, 3/69, p. 96.
Fig. 34-8. Electronic Engineering, 676, p. 32.
Fig. 34-9. Popular Electronics, 3/75, p. 78.
Fig. 34-10. General Electric, Optoelectronics, Third Edition.
Fig. 34-11. Radio-Electronics, 2/87, p. 36.
Fig. 34-12. General Electric, Application Note 200.35, p. 16.
Fig. 34-13. General Electric, Application Note 90. 16, p. 27.

Fig. 34-14. National Semiconductor Corp., CMOS Databook, 1981, p. 8-45.
Fig. 34-15. General Electric, Application Note 90.25.
Fig. 34-16. Motorola, Circuit Applications for the Trian (AN-466), p. 11.
Fig. 34-17. Siliconix, MOSpower Applications Handbook, p. 6-181.
Fig. 34-18. Popular Electronics, 3/75, p. 78.

Chapter 35

Fig. 35-1. Linear Technology Corp., Linear Applications Handbook, 1987, p. AN5-6.
Fig. 35-2. Linear Technology Corp., Linear Databook, 1986, p. 2-82.

Chapter 36

Fig. 36-1. Courtesy, William Sheets.
Fig. 36-2. Electronics Today International, 6/76, p. 43.
Fig. 36-3. Radio-Electronics, 4/87, p. 48.
Fig. 36-4. Radio-Electronics, 2/84, p. 97.
Fig. 36-5. Hands-On Electronics, Sep/Oct 1986, p. 24.
Fig. 36-6. Electronic Engineering, 9/86, p. 37.
Fig. 36-7. R-E Experimenters Handbook, p. 162.
Fig. 36-8. Linear Technology Corp., Linear Databook, 1986, p. 2-96.

Chapter 37

Fig. 37-1. Electronic Design, 3/75, p. 68.
Fig. 37-2. EXAR, Telecommunications Databook, 1986, p. 11-38.

Chapter 38

Fig. 38-1. Electronic Design, 8/73, p. 86.
Fig. 38-2. Electronic Design, 12/78, p. 98.
Fig. 38-3. Motorola, Thyristor Device Data, SEries A, 1985, p. 1-6-53.
Fig. 38-4. Signetics, 1987 Linear Data Manual Vol. 2: Industrial, 2/87, p. 7-59.

Chapter 39

Fig. 39-1. National Semiconductor Corp., 1984 Linear Supplement Databook, p. S5-143.

Chapter 40

Fig. 40-1. Electronic Design, 6/79, p. 122.
Fig. 40-2. Electronic Engineering, 9/84, p. 37.
Fig. 40-3. NASA Tech Briefs, 6/87, p. 26.
Fig. 40-4. Electronics Today International, 6/80, p. 68.
Fig. 40-5. Electronic Engineering, 9/87, p. 27.
Fig. 40-6. Texas Instruments, Linear and Interface Circuits Applications, Vol. 1, 1985, p. 7-25.
Fig. 40-7. Radio-Electronics, 5/70, p. 33.
Fig. 40-8. Linear Technology Corp., Linear Databook, 1986, p. 5-78.
Fig. 40-9. Linear Technology Corp., Linear Databook, 1986, p. 8-40.
Fig. 40-10. Electronic Engineering, 2/79, p. 23.
Fig. 40-11. Electronic Engineering, 7/86, p. 30.
Fig. 40-12. Motorola, Application Note AN-294, p. 6.
Fig. 40-13. Motorola, Linear Integrated Circuits, p. 3-139.
Fig. 40-14. Hands-On Electronics, Winter 1985, p. 60.
Fig. 40-15. Texas Instruments, Linear and Interface Circuits Applications, Vol. 1, 1985, p. 7-16.
Fig. 40-16. Signetics, Analog Data Manual, 1982, p. 3-39.
Fig. 40-17. General Electric/RCA, BiMOS Operational Amplifier Circuit Ideas, 1987, p. 10.
Fig. 40-18. Texas Instruments, Linear and Interface Circuits Applications, Vol. 1, 1985, p. 3-20.
Fig. 40-19. National Semiconductor, Linear Brief 23.

Chapter 41

Fig. 41-1. Tab Books, Inc., 101 Sound, Light, and Power IC Projects.
Fig. 41-2. Courtesy, William Sheets.

Chapter 42

Fig. 42-1. Courtesy, William Sheets.
Fig. 42-2. Hands-On Electronics, Sep/Oct 1986, p. 85.
Fig. 42-3. Courtesy, William Sheets.

Chapter 43

Fig. 43-1. Texas Instruments, Linear and Interface Circuits Applications, 1987, p. 12-8.

Fig. 43-2. Texas Instruments, Linear and Interface Circuits Applications, 1987, p. 12-10.

Chapter 44

Fig. 44-1. Linear Technology Corp., Linear Applications Handbook, 1987, p. AN3-7.

Chapter 45

Fig. 45-1. Linear Technology Corp., Linear Databook Supplement, 1988, p. S2-34.

Fig. 45-2. Hands-On Electronics, Jul/Aug 1986, p. 86.

Fig. 45-3. Signetics, Linear Data Manual Vol. 3: Video, p. 5-15.

Fig. 45-4. Tab Books, Inc. Build Your Own Laser, Phaser, Ion Ray Gun, 1983, p. 29.

Fig. 45-5. Hands-On Electronics, Jul/Aug 1986, p. 86.

Fig. 45-6. Electronic Engineering, 8/78, p. 24.

Chapter 46

Fig. 46-1. Hands-On Electronics, 12/86, p. 42.

Fig. 46-2. Linear Technology Corp., Linear Databook, 1986, p. 2-82.

Fig. 46-3. Electronic Engineering, 9/84, p. 33.

Fig. 46-4. Texas Instruments, Linear and Interface Circuits Applications Vol. 1, 1985, p. 3-18.

Fig. 46-5. Linear Technology Corp., Linear Databook, 1986, p. 2-83.

Chapter 47

Fig. 47-1. Electronic Engineering, 7/86, p. 30.

Fig. 47-2. Signetics, Analog Data Manual, 1982, p. 3-73.

Fig. 47-3.National Semiconductor Corp., Data Conversion/Acquisition Databook, 1980, p. 3-30.

Chapter 48

Fig. 48-1. Hands-On Electronics, 5/87, p. 95.

Fig. 48-2. Electronic Design 16, 8/76, p. 76.

Chapter 49

Fig. 49-1. Motorola, Thyristor Device Data, Series A, 1985, p. 1-6-50.

Fig. 49-2. Motorola, TMOS Power FET Design Ideas, 1985, p. 20.

Fig. 49-3. Motorola, TMOS Power FET Design Ideas, 1985, p. 21.

Fig. 49-4. R-E Experimenters Handbook, p. 156.

Fig. 49-5. Motorola, Thyristor Device Data, Series A, 1985, p. 1-6-48.

Fig. 49-6. Motorola, Thyristor Device Data, Series A, 1985, 1-6-55.

Fig. 49-7. Electronic Engineering, 9/84, p. 38.

Fig. 49-8. Tab Books, Inc., 101 Sound, Light, and Power IC Projects.

Fig. 49-9. Motorola, Thyristor Device Data, Series A, 1985, p. 1-6-60.

Fig. 49-10. General Electric, Application Note 200.35, p. 17.

Chapter 50

Fig. 50-1. Tab Books, Inc., Build Your Own Laser, Phasor, Ion Ray Gun, 1983, p. 104.

Fig. 50-2. Electric Engineering, 12/84, p. 34.

Chapter 51

Fig. 51-1. Hands-On Electronics, Sep/Oct 1986, p. 26.

Fig. 51-2. General Electric, Optoelectronics, Third Edition, p. 107.

Fig. 51-3. Courtesy, William Sheets.

Fig. 51-4. Courtesy, William Sheets.

Fig. 51-5. Electronic Engineering, 12/75, p. 15.

Fig. 51-6. Hands-On Electronics, 4/87, p. 94.

Fig. 51-7. Hands-On Electronics, 2/87, p. 87.

Fig. 51-8. Hands-On Electronics, 10/87, p. 92.

Fig. 51-9. Linear Technology Corp., Linear Databook, 1986, p. 2-83.

Fig. 51-10. Radio-Electronics, 11/86, p. 38.

Fig. 51-11. General Electric, Application Note 200.35, p. 15.

Fig. 51-12. Intersil, Component Data Catalog, 1987, p. 7-44.

Fig. 51-13. Radio Electronics, 3/86, p. 32.

Fig. 51-14. Electronic Design, 11/82, p. 172.

Fig. 51-15. Electronic Design, 6/76, p. 120.

Fig. 51-16. Linear Technology Corp., Linear Application Handbook, 1987, p. AN5-3.

Chapter 52

Fig. 52-1. Siliconix, Integrated Circuit Data Book, 3/85, p. 10-85.

Fig. 52-2. Siliconix, Integrated Circuit Data Book, 3/85, p. 10-79.
Fig. 52-3. Siliconix, Integrated Circuit Data Book, 3/85, p. 2-144.
Fig. 52-4. Signetics, 1987 Linear Data Manual, Vol. 2: Industrial, 10/86, p. 4-261.
Fig. 52-5. Siliconix, Integrated Circuit Data Book, 3/85, p. 2-103.

Chapter 53

Fig. 53-1. Signetics, 1987 Linear Data Manual, Vol. 2: Industrial, 2/87, p. 5-350.
Fig. 53-2. Linear Technology Corp., Linear Application Handbook, 1987, p. AN3-9.

Chapter 54

Fig. 54-1. Hands-On Electronics, May/Jun 1986, p. 63.
Fig. 54-2. Electronic Design, 10/73, p. 114.
Fig. 54-3. Electronic Engineering, 7/85, p. 44.
Fig. 54-4. Electronics Today International, 3/80, p. 25.
Fig. 54-5. Popular Electronics, 1/82, p. 76.
Fig. 54-6. Electronic Engineering, 6/87, p. 28.
Fig. 54-7. Popular Electronics, 8/69, p. 71.
Fig. 54-8. Electronics Today International, 1/76, p. 52.
Fig. 54-9. Electronic Engineering, 9/78, p. 20.

Chapter 55

Fig. 55-1. Electronic Engineering, 1/85, p. 39.
Fig. 55-2. Intersil, Component Data Catalog, 1987, p. 7-44.

Chapter 56

Fig. 56-1. Courtesy, William Sheets.
Fig. 56-2. Courtesy, William Sheets.

Chapter 57

Fig. 57-1. Popular Electronics, 6/73.
Fig. 57-2. Courtesy, William Sheets.
Fig. 57-3. Courtesy, William Sheets.
Fig. 57-4. Courtesy, William Sheets.

Chapter 58

Fig. 58-1. Unitrode Corp., 10/86, p. 332.
Fig. 58-2. Unitrode Corp., 10/86, p. 332.
Fig. 58-3. Radio Electronics, 8/82, p. 36.
Fig. 58-4. Hands-On Electronics, Winter 1985, p. 93.
Fig. 58-5. Hands-On Electronics, 9/87, p. 71.
Fig. 58-6. Electronic Engineering, 10/77, p. 23.
Fig. 58-7. Electronic Design, 11/8/69, p. 109.
Fig. 58-8. Radio-Electronics, 11/82, p. 79.
Fig. 58-9. National Semiconductor Corp., Transistor Databook, 1982, p. 11-34.
Fig. 58-10. National Semiconductor Corp., Data Conversion/Acquisition Databook, 1980, p. 2-5.
Fig. 58-11. Linear Technology Corp., Linear Databook, 1986, p. 8-42.
Fig. 58-12. Signetics, Linear Data Manual Vol. 3: Video, p. 11-120.
Fig. 58-13. General Electric, Application Note 90.16, p. 28.
Fig. 58-14. RCA, Digital Integrated Circuits Application Note ICAN-6346, p. 5.
Fig. 58-15. Linear Technology Corp., Linear Databook, 1986, p. 5-15.
Fig. 58-16. General Electric, SCR Manual, Sixth Edition, 1979, p. 204.

Chapter 59

Fig. 59-1. Motorola, TMOS Power FET Design Ideas, 1985, p. 45.
Fig. 59-2. Courtesy, William Sheets.
Fig. 59-3. Signetics, Linear Data Manual, Vol. 3: Video, p. 11-3.
Fig. 59-4. Radio-Electronics, 8/77, p. 33.
Fig. 59-5. Electronic Design, 3/77, p. 76.

Chapter 60

Fig. 60-1.Electronic Engineering, 5/84, p. 43.
Fig. 60-2. General Electric, Optoelectronics, Third Edition, p. 114.
Fig. 60-3. Motorola, TMOS Power FET Design Ideas, 1985, p. 32.
Fig. 60-4. Siliconix, MOSpower Applications Handbook, p. 6-186.
Fig. 60-5. Electronic Engineering, 7/86, p. 34.
Fig. 60-6. Electronic Engineering, 4/85, p. 47.
Fig. 60-7. Motorola, Thyristor Device Data, Series A, 1985, p. 1-6-8.
Fig. 60-8. Motorola, TMOS Power FET Design Ideas, 1985, p. 31.
Fig. 60-9.Sprague Electric Co., Integrated Circuits Databook WR504, p. 4-159.
Fig. 60-10. General Electric, Application Note 200.35, p. 18.
Fig. 60-11. Sprague Electric Co., Integrated Circuits Databook WR504, p. 4-160.

Fig. 60-12. Motorola, TMOS Power FET Design Ideas, 1985, p. 55.
Fig. 60-13. Motorola, TMOS Power FET Design Ideas, 1985, p. 54.
Fig. 60-14. Motorola, TMOS Power FET Design Ideas, 1985, p. 51.
Fig. 60-15. Electronic Engineering, 2/84, p. 23.
Fig. 60-16. National Semiconductor Corp., Linear Application Databook, p. 1066.
Fig. 60-17. General Electric, Optoelectronics, Third Edition, p. 113.

Chapter 61

Fig. 61-1. Fairchild Corp., Linear Databook, 1982, p. 4-72.
Fig. 61-2. Linear Technology Corp., Linear Applications Handbook, 1987, p. AN3-14.

Chapter 62

Fig. 62-1. 73 Magazine, 12/76, p. 170.
Fig. 62-2. Electronics International Today, 1/76, p. 44.
Fig. 62-3. Signetics Analog Data Manual, 1983, p. 10-93.
Fig. 62-4. Electronics Today International, 9/75, p. 66.
Fig. 62-5. CQ, 5/76, p. 26.

Chapter 63

Fig. 63-1. National Semiconductor Corp., Linear Applications Databook, p. 1096.
Fig. 63-2. EXAR, Telecommunications Databook, 1986, p. 7-24.
Fig. 63-3. EXAR, Telecommunications Databook, 1986, p. 7-24.
Fig. 63-4. Electronic Engineering, 12/84, p. 33.
Fig. 63-5. Electronic Engineering, 11/85, p. 31.
Fig. 63-6. Courtesy, William Sheets.
Fig. 63-7. Texas Instruments, Linear and Interface Circuits Applications, Vol. 1, 1985, p. 2-11.
Fig. 63-8. Courtesy, William Sheets.
Fig. 63-9. Courtesy, William Sheets.
Fig. 63-10. Courtesy, William Sheets.

Chapter 64

Fig. 64-1. Electronic Engineering, 6/83, p. 31.
Fig. 64-2. Electronic Design 15, 7/75, p. 68.

Chapter 65

Fig. 65-1. General Electric, Optoelectronics, Third Edition, p. 135.
Fig. 65-2. NASA, Tech Briefs, Summer 1984, p. 446.
Fig. 65-3. General Electric, Optoelectronics, Third Edition, p. 140.
Fig. 65-4. General Electric, Optoelectronics, Third Edition, p. 121.
Fig. 65-5. General Electric, Optoelectronics, Third Edition, p. 120.
Fig. 65-6. General Electric, Optoelectronics, Third Edition, p. 139.
Fig. 65-7. General Electric, Optoelectronics, Third Edition, p. 120.
Fig. 65-8. General Electric, Optoelectronics, Third Edition, p. 134.
Fig. 65-9. General Electric, Optoelectronics, Third Edition, p. 112.
Fig. 65-10. National Semiconductor Corp., Data Conversion/Acquisition Databook, 1980, p. 13-46.
Fig. 65-11. General Electric, Optoelectronics, Third Edition, p. 133.
Fig. 65-12. Courtesy, William Sheets.
Fig. 65-13. General Electric, Optoelectronics, Third Edition, p. 117.
Fig. 65-14. Electronic Engineering, 8/86, p. 36.
Fig. 65-15. General Electric, Optoelectronics, Third Edition, p. 118.

Chapter 66

Fig. 66-1. 73 For Radio Amateurs, 11/85, p. 32.
Fig. 66-2. Radio-Electronics, 5/70, p. 35.
Fig. 66-3. Electronics Today International, 7/78, p. 16.
Fig. 66-4. Electronics Today International, 12/78, p. 15.
Fig. 66-5. General Electric, Semiconductor Data Handbook, Third Edition, p. 513.
Fig. 66-6. Electronic Design, 11/29/84, p. 281.
Fig. 66-7. Unitrode Corp., Databook 1986, p. 51.
Fig. 66-8. Electronic Engineering, 5/77, p. 27.
Fig. 66-9. National Semiconductor Corp., Transistor Databook, 1982, p. 7-19.
Fig. 66-10. Courtesy, William Sheets.
Fig. 66-11. Electronic Design, 10/65.

Fig. 66-12. Hands-On Electronics, Summer 1984, p. 43.
Fig. 66-13. Signetics, Analog Data Manual, 1982, p. 8-10.

Chapter 67

Fig. 67-1. Electronic Design, 5/79, p. 102.
Fig. 67-2. Radio-Electronics, 7/70, p. 36.
Fig. 67-3. Courtesy, William Sheets.

Chapter 68

Fig. 68-1. Texas Instruments, Linear and Interface Circuits Applications, Vol. 1, 1985, p. 3-18.
Fig. 68-2. Popular Electronics, 3/79, p. 78.

Chapter 69

Fig. 69-1. Electronic Engineering, 2/86, p. 38.
Fig. 69-2. Courtesy, William Sheets.
Fig. 69-3. Electronic Engineering, 4/77, p. 13.
Fig. 69-4. Electronic Engineering, 7/85, p. 34.
Fig. 69-5. Electronic Design, 3/77, p. 106.
Fig. 69-6. Electric Engineering, 1/87, p. 25.

Chapter 70

Fig. 70-1. Hands-On Electronics, 10/87, p. 96.
Fig. 70-2. Hands-On Electronics, Spring 1985, p. 82.
Fig. 70-3. General Electric Project G4, p. 131.
Fig. 70-4. Radio Electronics, 12/84, p. 77.
Fig. 70-5. Electronics Today International, 6/75, p. 42.
Fig. 70-6. Electronics Today International, 9/82, p. 42.

Chapter 71

Fig. 71-1. Signetics, 1987 Linear Data Manual Vol. 1: Communications, 11/86, p. 7-251.
Fig. 71-2. National Semiconductor Corp., Linear Applications Databook, p. 1065.
Fig. 71-3. Siliconix, MOSpower Applications Handbook, p. 6-101.
Fig. 71-4. Hands-On Electronics, 5/87, p. 96.
Fig. 71-5. Hands-On Electronics, Spring 1985, p. 36.
Fig. 71-6. Hands-On Electronics, Summer 1984, p. 74.
Fig. 71-7. Radio-Electronics, 3/86, p. 59.
Fig. 71-8. National Semiconductor Corp., Audio/Radio Handbook, 1980, p. 4-20.
Fig. 71-9. National Semiconductor Corp., Linear Databook, 1982, p. 3-187.
Fig. 71-10. Signetics, 1987 Linear Data Manual, Vol. 2: Industrial, 11/86, p. 4-135.

Chapter 72

Fig. 72-1. Texas Instruments, Linear and Interface Circuits Applications, Vol. 1, 1985, , p. 6-35.
Fig. 72-2. Motorola, TMOS Power FET Design Ideas, 1985, p. 43.
Fig. 72-3. Electronic Engineering, 12/84, p. 41.
Fig. 72-4. NASA, Tech Briefs, 9/87, p. 21.
Fig. 72-5. Motorola, TMOS Power FET Design Ideas, 1985, p. 37.
Fig. 72-6. Siliconix, MOSpower Applications Handbook, p. 6-51.
Fig. 72-7. General Electric/RCA, BiMOS Operational Amplifiers Circuit Ideas, 1987, p. 24.
Fig. 72-8. Courtesy, William Sheets.
Fig. 72-9. General Electric/RCA, BiMOS Operational Amplifiers Circuit Ideas, 1987, p. 24.
Fig. 72-10. Radio-Electronics, 6/86, p. 52.
Fig. 72-11. Siliconix, MOSpower Applications Handbook, p. 6-177.
Fig. 72-12. Siliconix, MOSpower Applications Handbook, p. 6-59.
Fig. 72-13. Linear Technology Corp., Linear Databook, 1986, p. 3-23.
Fig. 72-14. Electronic Engineering, 10/84, p. 38.
Fig. 72-15. NASA Tech Briefs, Summer 1985, p. 32.
Fig. 72-16. Electronic Engineering, 1/87, p. 22.
Fig. 72-17. Motorola, TMOS Power FET Design Ideas, 1985, p. 42.
Fig. 72-18. Motorola, Thyristor Device Data, Series A, 1985, p. 1-6-55.
Fig. 72-19. 73 Magazine, 12/70, p. 170.
Fig. 72-20. Signetics, Analog Data Manual, 1983, p. 12-27.
Fig. 72-21. Signetics, 1987 Linear Data Manual, Vol. 2: Industrial, 2/87, p. 8-223.
Fig. 72-22. Electronic Engineering, 1/85, p. 45.
Fig. 72-23. Motorola, Linear Integrated Circuits, p. 3-138.

Fig. 72-24. Electronic Design, 11/29/84, p. 282.
Fig. 72-25. Electronics Today International, 1/70, p. 45.
Fig. 72-26. Linear Technology, 1986 Linear Databook, p. 3-22.

Chapter 73

Fig. 73-1. Electronic Engineering, 10/76, p.17.
Fig. 73-2. Electronic Engineering, 7/77, p. 26.
Fig. 73-3. Popular Electronics, 5/74, p. 24.
Fig. 73-4. Courtesy, William Sheets.

Chapter 74

Fig. 74-1. NASA, Tech Briefs, Winter 1985, p. 52.
Fig. 74-2. Courtesy, William Sheets.
Fig. 74-3. Electronic Engineering, 3/86, p. 34.
Fig. 74-4. Courtesy, William Sheets.
Fig. 74-5. Courtesy, William Sheets.

Chapter 75

Fig. 75-1. Electronic Design 25, 1275, p. 90.
Fig. 75-2. Courtesy, William Sheets.
Fig. 75-3. Electronics Today International, 9/75, p. 66.
Fig. 75-4. Electronic Engineering, 1/85, p. 41.
Fig. 75-5. Hands-On Electronics, Fall 1984, p. 66.
Fig. 75-6. Radio-Electronics, 3/77, p. 76.

Chapter 76

Fig. 76-1. Hands-On Electronics, 11/86, p. 92.
Fig. 76-2. Popular Electronics, 11/77, p. 62.

Chapter 77

Fig. 77-1. Electronic Engineering, 9/86, p. 38.
Fig. 77-2. RCA, Design Guide for Fire Detection Systems, Publication 2M1189, p. 27.
Fig. 77-3. Electronic Engineering, 9/86, p. 34.

Chapter 78

Fig. 78-1. Electronic Engineering, 5/76, p. 17.
Fig. 78-2. Electronic Design, 4/74, p. 114.
Fig. 78-3. Electronic Engineering, 10/86, p. 41.

Chapter 79

Fig. 79-1. Electronic Engineering, 12/75, p. 15.
Fig. 79-2. Radio-Electronics, Experimenters Handbook, p. 122.

Chapter 80

Fig. 80-1. Signetics, 1987 Linear Data Manual, Vol. 1: Communications, 2/87, p. 4-310.
Fig. 80-2.Motorola, Thyristor Device Data, Series A, 1985, p. 1-6-52.

Chapter 81

Fig. 81-1.Signetics, 1987 Linear Data Manual, Vol. 1: Communications, 11/86, p. 7-14.
Fig. 81-2. Hands-On Electronics, 3/87, p. 28.
Fig. 81-3. Hands-On Electronics, 12/86, p. 22.

Chapter 82

Fig. 82-1. General Electric/RCA, BiMOS Operational Amplifiers Circuit Ideas, 1987, p. 11.
Fig. 82-2. Signetics, 1987 Linear Data Manual, Vol. 2: Industrial, 11/86, p. 4-135.

Chapter 83

Fig. 83-1. Electronic Design, 9/69, p. 106.
Fig. 83-2. Motorola, Thyristor Device Data, Series A, 1985, p. 1-6-61.
Fig. 83-3. QST, 7/87, p. 32.

Chapter 84

Fig. 84-1. Electronic Engineering, 4/86, p. 34.
Fig. 84-2. Electronic Engineering, 7/85, p. 44.
Fig. 84-3. Electronic Engineering, 11/86, p. 34.
Fig. 84-4. NASA, Tech Briefs, 1/88, p. 18.

Chapter 85

Fig. 85-1. Motorola, RF Data Manual, 1986, p. 6-141.
Fig. 85-2. Motorola, RF Data Manual, 1986, p. 6-240.
Fig. 85-3. QST, 7/87, p. 31.
Fig. 85-4. QST, 5-86, p. 23.
Fig. 85-5. Motorola, RF Data Manual, 1986, p. 6-181.
Fig. 85-6. Ham Radio, 7/86, p. 50.
Fig. 85-7. Radio Electronics, 3/87, p. 42.
Fig. 85-8. NASA, Tech Briefs, Spring 1984, p. 322.
Fig. 85-9. Motorola, RF Data Manual, 1986, p. 6-232.

Chapter 86

Fig. 86-1. QST, 12/85, p. 39.

Chapter 87

Fig. 87-1. General Electric/RCA, BiMOS Operational Amplifiers circuit Ideas, 1987, p. 14.
Fig. 87-2. Intersil, Component Data Catalog, 1987, p. 7-5.
Fig. 87-3. Linear Technology Corp., Linear Databook, 1986, p. 2-113.
Fig. 87-4. Electronics Today International, 3/78, p. 51.
Fig. 87-5. National Semiconductor Corp., Hybrid Products Databook, 1982, p. 17-149.
Fig. 87-6. Siliconix, Integrated Circuits Data Book, 3/85, p. 10-58.

Chapter 88

Fig. 88-1. General Electric/RCA, BiMOS Operational Amplifiers Circuit Ideas, 1987, p. 8.
Fig. 88-2. Linear Technology Corp., Linear Databook, 1986, p. 2-113.
Fig. 88-3. Texas Instruments, Linear and Interface Circuits Applications, Vol. 1, 1985, p. 3-15, 3-16.
Fig. 88-4. QST, 4/87, p. 48.
Fig. 88-5. Electronic Engineering, 5/85, p. 38.
Fig. 88-6. Electronic Design, 6/81, p. 250.
Fig. 88-7. Ham Radio, 1/87, p. 97.
Fig. 88-8. Electronic Engineering, 2/76, p. 17.
Fig. 88-9. Electronic Design, 2/73, p. 82.
Fig. 88-10. Radio-Electronics, 2/71, p. 37.
Fig. 88-11. Ham Radio, 6/82, p. 33.

Chapter 89

Fig. 89-1. Popular Electronics, 12/74, p. 68.
Fig. 89-2. Electronics Today International, 1/77, p. 49.
Fig. 89-3. Electronics Today International, 1/77, p. 49.
Fig. 89-4. Popular Electronics, 8/74, p. 98.
Fig. 89-5. General Electric/RCA, BiMOS Operational Amplifiers Circuit Ideas, 1987, p. 28.
Fig. 89-6. Electronics Today International, 11/76, p. 45.
Fig. 89-7. Electronics Today International, 2/75, p. 66.
Fig. 89-8. Electronics Today International, 1/77, p. 85.
Fig. 89-9. Electronics Today International, 6/75, p. 63.
Fig. 89-10. Electronics Today International, 1/77, p. 49.
Fig. 89-11. Courtesy, William Sheets.
Fig. 89-12. Electronics Today International, 11/80, p. 43.
Fig. 89-13. Radio-Electronics, 2/75, p. 42.
Fig. 89-14. Courtesy, William Sheets.

Chapter 90

Fig. 90-1. Courtesy, William Sheets.
Fig. 90-2. Radio-Electronics, 12/83, p. 38.
Fig. 90-3. Hands-On Electronics, 8/87, p. 77.
Fig. 90-4. Electronics today International, 6/79, p. 27.
Fig. 90-5. Courtesy, William Sheets.

Chapter 91

Fig. 91-1. Hands-On Electronics, 6/87, p. 40.
Fig. 91-2. Electronics Today International, 8/77, p. 25.
Fig. 91-3. Electronics Today International, 11/80.
Fig. 91-4. Texas Instruments, Complex Sound Generator, Bulletin No. DL-12612, p. 13.
Fig. 91-5. Electronics Today International, 4/82, p. 34.
Fig. 91-6. Electronics Today International, 2/75, p. 66.
Fig. 91-7. Hands-On Electronics, 12/86, p. 42.
Fig. 91-8. Courtesy, William Sheets.
Fig. 91-9. Courtesy, William Sheets.
Fig. 91-10. Texas Instruments, complex Sound Generator, Bulletin No. DL-S 12612, p. 11.
Fig. 91-11. Courtesy, William Sheets.

Chapter 92

Fig. 92-1. Electronic Engineering, 3/82, p. 29.
Fig. 92-2. Electronic Engineering, 1078, p. 17.
Fig. 92-3. EXAR, Telecommunications Databook, 1986, p. 9-24.
Fig. 92-4. Electronic Design, 5/79, p. 100.
Fig. 92-5. Siliconix, Integrated Circuits Data Book, 3/85, p. 5-17.
Fig. 92-6. General Electric/RCA, BiMOS Operational Amplifiers Circuit Ideas, 1987, p. 7.

Fig. 92-7. Electronic Design, 6/69, p. 126.
Fig. 92-8. Electronic Engineering, 8/84, p. 27.
Fig. 92-9. Electronic Engineering, 12/85, p. 35.
Fig. 92-10. Electronic Engineering, 8/84, p. 29.

Chapter 93

Fig. 93-1. General Electric/RCA, Operational Amplifiers Circuit Ideas, 1987, p. 10.
Fig. 93-2. Linear Technology Corp., Linear Databook, 1986, p. 8-42.

Chapter 94

Fig. 94-1. Tab Books, Inc. 303 Dynamic Electronic Circuits, p. 169.
Fig. 94-2. Electronics Today International, 12/77, p. 86.

Chapter 95

Fig. 95-1. Electronics Today International, 10/78, p. 46.
Fig. 95-2. Hands-On Electronics, Fall 1984, p. 65.
Fig. 95-3. Courtesy, William Sheets.

Chapter 96

Fig. 96-1. Electronic Engineering, 6/86, p. 35.
Fig. 96-2. General Electric, SCR Manual, Sixth Edition, 1979, p. 200.

Chapter 97

Fig. 97-1. Electronic Engineering, 9/87, p. 32.
Fig. 97-2. Intersil, Component Data Catalog, 1987, p. 14-67.

Chapter 98

Fig. 98-1. Electronic Engineering, 2/87, p. 40.
Fig. 98-2. Tab Books, Inc. The Giant Book of Easy-To-Build Electronic Projects, 1982, p. 1.
Fig. 98-3. Radio-Electronics, 2/85, p. 90.
Fig. 98-4. EXAR, Telecommunications Databook, 1986, p. 11-38.
Fig. 98-5. Tab Books, Inc. build Your Own Laser, Phaser, Ion gun, 1983, p. 305.
Fig. 98-6. Electronic Design, 12/78, p. 95.
Fig. 98-7. Radio-Electronics, 11/79, p. 53.
Fig. 98-8. Electronic Design, 10/76, p. 194.
Fig. 98-9. Hands-On Electronics, 12/86, p. 22.
Fig. 98-10. Electronics Engineering, 1/79, p. 17.
Fig. 98-11. Radio-Electronics, 12/78, p. 67.
Fig. 98-12. Radio-Electronics, 11/77, p. 45.
Fig. 98-13. Hands-On Electronics, Summer 1985, p. 74.
Fig. 98-14. Hands-On Electronics, Sep/Oct 1986, p. 88.
Fig. 98-15. Hands-On Electronics, Sep/Oct 1986, p. 105.
Fig. 98-16. Hands-On Electronics, Summer 1984, p. 39.
Fig. 98-17. EXAR, Telecommunications Databook, 1986, p. 4-19.
Fig. 98-18. EXAR, Telecommunications Databook, 1986, p. 5-14.
Fig. 98-19. EXAR, Telecommunications Databook, 1986, p. 4-15.
Fig. 98-20. Signetics, 1987 Linear Data Manual, Vol. 1: Communications, 12/2/86, p. 6-50.

Chapter 99

Fig. 99-1. NASA, Tech Briefs, 12/87, p. 28.
Fig. 99-2. Signetics, 1987 Linear Data Manual, Vol. 2: Industrial, 2/87, p. 7-67.
Fig. 99-3. Electronic Design, 8/75, p. 82.
Fig. 99-4. Linear Technology Corp., Linear Application Handbook, 1987, p. AN3-6.
Fig. 99-5. General Electric, Optoelectronics, Third Edition, p. 153.
Fig. 99-6. General Electric, Application Note 200.85, p. 18.
Fig. 99-7. Electronic Design, 8/82, p. 217.
Fig. 99-8. Electronic Design, 8/83, p. 230.
Fig. 99-9. Courtesy, William Sheets.

Chapter 100

Fig. 100-1. General Electric, SCR Manual, Sixth Edition, 1979, p. 222.
Fig. 100-2. Electronic Engineering, 9/85, p. 30.
Fig. 100-3. National Semiconductor Corp., 1984 Linear Supplement Databook, p. S1-41.
Fig. 100-4. National Semiconductor Corp., 1984 Linear Supplement Databook, p. S1-42.
Fig. 100-5. Linear Technology Corp., Linear Databook, 1986, p. 2-101.
Fig. 100-6. Courtesy, William Sheets.

Chapter 101

Fig. 101-1. Linear Technology Corp., Linear Applications Handbook, 1987, p. AN7-2.
Fig. 101-2. Electric Engineering, 7/84, p. 31.

Chapter 102

Fig. 102-1. Hands-On Electronics, 11/86, p. 93.
Fig. 102-2. Hands-On Electronics, 9/87, p. 32.

Chapter 103

Fig. 103-1. Teledyne Semiconductor, Data & Design Manual, 1981, p. 7-17.
Fig. 103-2. Linear Technology Corp., Application Note 9, p. 18.
Fig. 103-3. Radio-Electronics, 9/82, p. 42.
Fig. 103-4. Intersil, Component Data Catalog, 1987, p. 6-8.
Fig. 103-5. Intersil, Component Data Catalog, 1987, p. 6-11.
Fig. 103-6. Intersil, Component Data Catalog, 1987, p. 6-8.

Chapter 104

Fig. 104-1. NASA, Tech Briefs, Spring 1985, p. 40.
Fig. 104-2. NASA, Tech Briefs, Fall/Winter 1981, p. 319.
Fig. 104-3. Popular Electronics, 12/82, p. 82.

Chapter 105

Fig. 105-1. General Electric, Semiconductor Data Handbook, Third Edition, p. 513.
Fig. 105-2. Motorola, Application Note AN294.
Fig. 105-3. Electronic Design, 4/77, p. 120.
Fig. 105-4. Motorola, Application Note AN294.

Chapter 106

Fig. 106-1. NASA, Tech Briefs, Sep/Oct 1986, p. 36.
Fig. 106-2. Electronic Engineering, 9/77, p. 37.
Fig. 106-3. Motorola, Thyristor Device Data, Series A, 1985, p. 1-6-51.
Fig. 106-4. Motorola, Thyristor Device Data, Series A, 1985, p. 1-6-54.
Fig. 106-5. Texas Instruments, Linear and Interface Circuits Applications, Vol. 1, 1985, p. 7-23.
Fig. 106-6. Intersil, Databook, 1987, p. 7-102.
Fig. 106-7. Intersil, Component Data Catalog, 1987, p. 14-67.
Fig. 106-8. General Electric, Application Note 90.16, p. 30.

Chapter 107

Fig. 107-1. Electronics Today International, 11/80.
Fig. 107-2. Signetics, 1987 Linear Data Manual, Vol. 2: Industrial, 2/87, p. 4-107.
Fig. 107-3. Electronics Today International, 9/77, p. 55.
Fig. 107-4. General Electric/RCA, BiMOS Operational Amplifiers Circuit Ideas, 1987, p. 21.
Fig. 107-5. Texas Instruments, Linear and Interface Circuits Applications, Vol. 1, 1985, p. 3-11.
Fig. 107-6. National Semiconductor Corp., Transistor Databook, 1982, p. 11-35.
Fig. 107-7. Electronics Today International, 6/82, p. 61.

Chapter 108

Fig. 108-1. Hands-On Electronics, 9/87, p. 88.
Fig. 108-2. Texas Instruments, Linear and Interface Circuits Applications, Vol. 1, 1985, p. 7-15.
Fig. 108-3. Tab Books, Inc., The Giant book of Easy-To-Build Electronics Projects, 1982, p. 31.

Index

Numbers preceded by a "I," "II," "III," or "IV" are from *Encyclopedia of Electronic Circuits* Vol. I, II, III, or IV, respectively.

A

absolute-value amplifier, I-31
absolute-value circuit,I-37, IV-274
absolute-value full wave rectifier, II-528
absolute-value Norton amplifier, III-11
ac bridge circuit, II-81
ac flasher, III-196
ac linear coupler, analog, II-412
ac motor
  control for, II-375
  three-phase driver, II-383
  two-phase driver, II-382
ac sequential flasher, II-238
ac switcher, high-voltage optically coupled, III-408
ac timer, .2 to 10 seconds, adjustable, II-681
ac-coupled amplifiers, dynamic, III-17
ac/dc indicator, IV-214
ac-to-dc converter, I-165
  fixed power supplies, IV-395
  full-wave, IV-120
  high-impedance precision rectifier, I-164
acid rain monitor, II-245, III-361
acoustic-sound receiver/transmitter, IV-311
active antennas, III-1-2, IV-1-4
  basic designs, IV-3
  wideband rod, IV-4
  with gain, IV-2
active clamp-limiting amplifiers, III-15
active crossover networks, I-172-173
active filters (*see also* filter circuits)
  band reject, II-401
  bandpass, II-221, II-223, III-190
  digitally tuned low power, II-218
  five pole, I-279
  high-pass, second-order, I-297
  low-pass, digitally selected break frequency, II-216
  low-power, digitally selectable center frequency, III-186
  low-power, digitally tuned, I-279
  programmable, III-185
  RC, up to 150 kHz, I-294
  state-variable, III-189
  ten-band graphic equalizer using, II-684
  three-amplifier, I-289
  tunable, I-294
  universal, II-214
  variable bandwidth bandpass, I-286
active integrator, inverting buffer, II-299
adapters
  dc transceiver, hand-held, III-461
  program, second-audio, III-142
 traveller's shaver, I-495
adder, III-327
AGC, II-17
AGC amplifiers
  AGC system for CA3028 IF amplifier, IV-458
  rf, wideband adjustable, III-545
  squelch control, III-33
  wideband, III-15
air conditioner, auto, smart clutch for, III-46
air flow detector, I-235, II-242, III-364
air flow meter (*see* anemometer)
air-pressure change detector, IV-144
air-motion detector, III-364
airplane propeller sound effect, II-592
alarms (*see also* detectors; indicators; monitors;sensors; sirens), III-3-9, IV-84-87

alarms (*cont.*)
auto burglar, II-2, I-3, III-4, I-7, I-10, IV-53
auto burglar, CMOS low-current design, IV-56
auto burglar, horn as loudspeaker, IV-54
auto burglar, single-IC design, IV-55
auto burglar, single-IC, III-7
auto-arming automotive alarm, IV-50
automatic turn-off after 8-minute delay, automotive, IV-52
automatic turn-off with delay, IV-54
blown fuse, I-10
boat, I-9
burglar, III-8, III-9, IV-86
burglar, latching circuit, I-8, I-12
burglar, NC and NO switches, IV-87
burglar, NC switches, IV-87
burglar, one-chip, III-5
burglar, self-latching, IV-85
burglar, timed shutoff, IV-85
camera triggered, III-444
capacitive sensor, III-515
current monitor and, III-338
differential voltage or current, II-3
digital clock circuit with, III-84
door-ajar, II-284
door-ajar, Hall-effect circuit, III-256
doorbell, rain, I-443
fail-safe, semiconductor, III-6
field disturbance, II-507
flasher, bar display, I-252
flood, III-206, I-390, IV-188
freezer meltdown, I-13
headlights-on, III-52
high/low limit, I-151
home-security system, IV-87
ice formation, II-58
infrared wireless security system, IV-222-223
low-battery disconnect and, III-65
low-battery warning, III-59
low volts, II-493
mains-failure indicator, IV-216
motion-actuated car, I-9
motion-actuated motorcycle, I-9
multiple circuit for, II-2
one-chip, III-5
photoelectric, II-4, II-319
piezoelectric, I-12
power failure, III-511, I-581, I-582
printer-error, IV-106
proximity, II-506, III-517
pulsed-tone, I-11
purse-snatcher, capacitance operated, I-134
rain, I-442, I-443, IV-189
road ice, II-57
security, I-4
self-arming, I-2
shutoff, automatic, I-4
signal-reception, receivers, III-270
smoke, photoelectric, line-operated, I-596
smoke, SCR, III-251
solar powered, I-13
sonic defenders, IV-324
speed, I-95
Star Trek red alert, II-577
strobe flasher alarm, IV-180
tamperproof burglar, I-8
temperature, II-643
temperature, light, radiation sensitive, II-4
timer, II-674
trouble tone alert, II-3
varying-frequency warning, II-579
wailing, II-572
warbling, II-573
watchdog timer/alarm, IV-584
water-leakage, IV-190
water level, I-389
allophone generator, III-733
alternators
battery-alternator monitor, automotive, III-63
AM demodulator, II-160
AM microphone, wireless, I-679
AM radio, I-544
AM radio
AM car-radio to short-wave radio converter, IV-500
broadcast-band signal generator, IV-302
envelope detector, IV-142
modulation monitor, IV-299
power amplifier for, I-77
receivers, III-529, IV-455
receivers, carrier-current, III-81
receivers, integrated, III-535
AM/FM
clock radio, II-543, III-1
squelch circuit for, II-547, III-1
amateur radio
linear amp, 2-30 MHz 140-W, III-260
receiver, III-534
signal-identifier, programmable, IV-326
transmitter, 80-M, III-675
ambience amplifier, rear speaker, II-458
ammeter, I-201
nano, I-202
pico, II-154, I-202
pico, circuit for, II-157
pico, guarded input circuit, II-156
six decade range, II-153, II-156
amplifiers, II-5-22, III-10-21
1 watt/2.3 GHz, II-540
2 to 6 W, with preamp, II-451
25-watt, II-452
30 MHz, I-567
40 dB gain design, IV-36
60 MHz, I-567
135-175 MHz, I-564
absolute value, I-31
ac servo, bridge type, III-387
AGC, II-17
AGC, squelch control, III-33
AGC, wide-band, III-15
adjustable-gain, noninverting, I-91
ambience, rear speaker, II-458
amateur radio, linear, 2-30 MHz, 140W, I-555
AM radio power, I-77
attenuator, digitally controlled, I-53
audio (*see* audio amplifiers)
audio converter, two-wire to four-wire, II-14
audio limiter, low-distortion, II-15
audio power amplifiers, IV-28-33
audio signal amplifiers, IV-34-42
auto fade circuit for, II-42
automatic level control for, II-20
automotive audio amplifier, IV-66
balance, II-46
balance, loudness control, II-47, II-395
balancing circuit, inverting, I-33
bass tone control, stereo phonograph, I-670
bridge, I-74
bridge, 4W, I-79
bridge, 16 W, I-82
bridge, ac servo, I-458
bridge, audio power, I-81
bridge, high-impedance, I-353
bridge transducer, III-71, II-84, I-351
broadband, low-noise, I-562
broadband, PEP, 160W, I-556
broadband/linear, PEP, 80W, I-557
buffer, 10x, I-128
buffer, 100x, I-128
buffer, ac, single-supply, I-126
buffer, battery-powered, standard cell, I-351
buffer, rf amplifiers with modulator, IV-490
buffer, sinewave output, I-126
buffer, unity-gain, stable design, II-6
cascade, III-13
cascade, 80 MHz, I-567
cascode, rf amplifiers, IV-488
CD4049 audio signal amplifiers, IV-40
chopper, ± 15V., III-12
chopper channel, I-350

chopper stabilized, II-7
clamp-limiting, active, III-15
color video, I-34, III-724
common-source, 450 MHz, I-568
common-source, low power, II-84
complementary-symmetry, I-78
composite, II-8, III-13
compressor/amplifier, low-distortion, IV-24
constant-bandwidth, III-21
current-shunt, III-21
current collector head, II-11, II-295
current-to-voltage, high-speed, I-35
dc servo, I-457
dc-stabilized, fast action, III-18
dc-to-video log, I-38
detector, MC1330/MC1352, television IF, I-688
differential, III-14, I-38
differential, high-impedance, I-27, I-354
differential, high-input high-impedance, II-19
differential, instrumentation, I-347, III-283
differential, instrumentation, biomedical, III-282
differential, programmable gain, III-507
differential, two op amp bridge type, II-83
dynamic, ac-coupled, III-17
electrometer, overload protected, II-155
FET input, II-7
flat response, I-92, III-673
forward-current booster, III-17
four-quadrant photo-conductive detector, I-359
gain, 10-dB, III-543
gain-controlled, III-34
gate, I-36
guitars, matching audio signal amplifiers, IV-38
hi-fi compander, II-12
hi-fi expander, II-13
high-frequency, III-259-265
high-impedance/high gain/high-frequency, I-41
high-impedance/low capacitance, I-691
IF (*see* IF amplifiers)
input/output buffer for analog multiplexers, III-11
instrumentation, I-346, I-348, I-349, I-352, I-354, III-278-284, IV-229-234
instrumentation, differential, high-gain, I-353
instrumentation, high-impedance, low-drift, I-355
instrumentation, high-speed, I-354
instrumentation, low-signal/high-impedance, I-350
instrumentation, precision FET input, I-355
instrumentation, triple op-amp design, I-347
instrumentation, variable gain, differential input, I-349
instrumentation, very high-impedance, I-354
inverting, I-42, II-41, III-14
inverting, ac, high-gain, I-92
inverting, gain of 2, lag-lead compensation, UHF, I-566
inverting, power, I-79
inverting, unity gain, I-80
isolation, capacitive load, I-34
isolation, level-shifting, I-348
isolation, medical telemetry, I-352
isolation, rf, II-547
JFET bipolar cascade video, I-692
line amplifier, universal design, IV-39
linear, CMOS inverter in, II-11
line-operated, III-37
line-type, duplex, telephone, III-616
load line protected, 75W audio, I-73
logarithmic, II-8
logic (*see* logic amplifier)
log ratio, I-42
loudness control, II-46
low-noise design, IV-37
low-level video detector circuit, I-687
medical telemetry, isolation, I-352
meter-driver, rf, 1-MHz, III-545
micro-powered, high-input/high-impedance, 20 dB, II-44
micro-sized, III-36
microphone, III-34, I-87
microphone, electronically balanced input, I-86
microwave, IV-315-319
monostable, II-268
neutralized common source, 100 MHz/400MHz, I-565
neutralized common source, 200 MHz, I-568
noninverting, I-32, I-33, I-41, III-14
noninverting, ac power, I-79
noninverting, single-supply, I-75
noninverting, split-supply, I-75
Norton, absolute value, III-11
op amp (*see also* operational amplifiers)
op amp, x10, I-37
op amp, x100, I-37
op amp, clamping circuit, II-22
op amp, intrinsically safe-protected, III-12
oscilloscope sensitivity, III-436
output, four-channel D/A, III-165
phono, I-80, I-81
phono, magnetic pickup, I-89
photodiode, I-361, II-324, III-672
photodiode, low-noise, III-19
playback, tape, III-672
polarity-reversing low-power, III-16
power (*see also* power amps), II-46, II-451, III-450-456
power, 10-W, I-76
power, 12-W, low distortion, I-76
power, 90-W, safe area protection, II-459
power, GaAsFET with single supply, II-10
power, rf power, 600 W, I-559
pre-amps (*see* pre-amplifiers)
precision, I-40
programmable, II-334, III-504-508
programmable gain, weighted resistors, II-9
pulse-width proportional controller circuit, II-21
push-pull, PEP, 100W, 420-450 MHz, I-554
PWM servo, III-379
reference voltage, I-36
remote, I-91
rf (*see* rf amplifiers)
sample and hold, high-speed, I-587
sample and hold, infinite range, II-558
selectable input, programmable gain, I-32
servo, 400 Hz, II-386
servo motor, I-452
servo motor drive, II-384
signal distribution, I-39
sound-activated, gain-controlled amp, IV-528
sound mixer, II-37
speaker, hand-held transceivers, III-39
speaker, overload protector for, II-16
speech compressor, II-15
standard cell, saturated, II-296
stereo, Av/200, I-77
stereo, gain control, II-9
summing, I-37, III-16
summing, fast action, I-36
summing, precision design, I-36
switching power, I-33
tape playback, I-92, IV-36
tape recording, I-90
telephone, III-621, IV-555, IV-560

amplifiers (*cont.*)
thermocouple, I-654, III-14
thermocouple, cold junction compensation, II-649
thermocouple, high-stability, I-355
transducer, I-86, III-669-673
transformerless, 6W 8-ohm output, I-75
transistorized, basic design, I-85
transistorized, headphone, II-43
tremolo circuit, voltage-controlled, I-598
tube amplifier,high-voltage isolation, IV-426
TV audio, III-39
two-meter, 5W output, I-567
two-meter, 10W power, I-562
UHF, I-565
UHF, wideband, high-performance FET, I-560
unity gain, I-27
unity gain, ultra-high Z, ac, II-7
VHF, single-device, 80W/50-ohm, I-558
video, I-692, III-708-712
video, FET cascade, I-691
video, loop-through amplifier, IV-616
voice activated switch, I-608
voltage, differential-to-single-ended, III-670
voltage-controlled, IV-20
voltage-follower, signal-supply operation, III-20
voltage-controlled (*see* voltage-controlled amplifiers)
volume, II-46
walkman, II-456
weighted-resistor programmable gain, precision design, II-9
wideband (*see* wideband amplifiers)
wide frequency range, III-262
write, III-18
amplitude modulator, low distortion low level, II-370
analog counter circuit, II-137
analog delay line, echo and reverb effects, IV-21
analog multiplexers
buffered input/output, III-396
single-trace to four-trace scope converter, II-431
analog multiplier, II-392
0/01 percent, II-392
analog-to-digital buffer, high-speed 6-bit, I-127
analog-to-digital converters, II-23-31, III-22-26, IV-5-6
3-bit, high-speed, I-50
8-bit, I-44, I-46
8-bit successive approximation, I-47
10-bit, II-28
10-bit serial output, II-27
12-bit, high-speed, II-29
16-bit, II-26
board design, IV-6
capacitance meter, $3^1/_2$ digit, III-76
cyclic, II-30
differential input system, II-31
fast precision, I-49
four-digit (10,000 count), II-25
half-flash, III-26
IC, low cost, I-50
LCD 3.5-digit display, I-49
logarithmic, three-decade, I-48
precision design, I-49
successive approximation, I-45, II-24, II-30
switched-capacitor, III-23
three-IC, low-cost, I-50
tracking, III-24
video converter, IV-610-611
analyzer, gas, II-281
AND gate, I-395
large fan-in, I-395
anemometers
hot-wire, III-342
thermally based, II-241
angle-of-rotation detector, II-283
annunciators, II-32-34, III-27-28, IV-710
ac line-voltage, III-730
bell, electronic, IV-9
chime circuit, low-cost, II-33
door buzzer, IV-8
door buzzer, electronic, IV-8
electronic bell, II-33
large fan-in, I-395
SCR circuit, self-interrupting load, IV-9
sliding tone doorbell, II-34
two-door annunciator, IV-10
answering machines, beeper, IV-559
antennas, IV-11-14
active, III-1-2
active antenna, wideband rod, IV-4
active antenna, with gain, IV-2
active antennas, IV-1-4
loop, 3.5 MHz, IV-12-13
selector switch, IV-538-539
tuner, 1-to-30 MHz, IV-14
antitheft device, I-7
arc lamp, 25W, power supply for, II-476
arc welding inverter, ultrasonic, 20 KHz, III-700
arc-jet power supply, starting circuit, III-479
astable flip-flop with starter, II-239
astable multivibrators, II-269, II-510,III-196, III-233, III-238
op amp, III-224
programmable-frequency, III-237
square wave generation with, II-597
attendance counter, II-138
attenuators, III-29-31
analog signals, microprocessor-controlled, III-101
digitally programmable, III-30
digitally selectable, precision design, I-52
programmable, I-53, III-30
programmable (1 to 0.00001), I-53
rf, IV-322
variable, I-52
voltage-controlled, II-18, III-31
audio amplifiers, III-32-39
AGC, squelch control, III-33
automotive stereo systems, high-power, IV-66
balance indicator, IV-215
Baxandall tone-control, IV-588
booster, 20 dB, III-35
circuit bridge load drive, III-35
complementary-symmetry, I-78
distribution, I-39, II-39
fixed power supplies, ± 35 V ac, IV-398
fixed power supplies, ±35 V, 5 A, mobile, IV-407
high-slew rate power op amp, I-82
gain-controlled, stereo, III-34
line-operated, III-37
load line protection, 75W, I-73
low-power, II-454
micro-sized, III-36
microphone, III-34
mini-stereo, III-38
pre-amp, NAB tape playback, professional, III-38
pre-amp, phono, magnetic, III-37
pre-amp, RIAA, III-38
Q-multiplier, II-20
signal, II-41-47
speaker, hand-held transceivers, III-39
television type, III-39
tone control, II-686
ultra-high gain, I-87
volume indicator, IV-212
audio circuits
audio-rf signal tracer probe, I-527
automatic gain control, II-17
booster, II-455, III-35
biquad filter, III-185
bridge load drive, III-35
carrier-current transmitter, III-79
clipper, precise, II-394
compressor, II-44

continuity tester, I-550
converter, two-wire to four-wire, II-14
distribution amplifier, II-39, I-39
filters (*see* audio filters)
frequency meter, I-311
generators (*see* sound generators)
LED bar peak program meter display, I-254
limiter, low distortion, II-15
millivoltmeter, III-767, III-769
mixers (*see* mixers)
notch filter, II-400
power meter, I-488
Q multiplier, II-20
sine wave generator, II-564
squelch, II-394
switching/mixing, silent, I-59
waveform generators, precision, III-230
audio effects circuits (*see* sound generators)
audio equalizer, IV-18
audio fader, IV-17
audio filters
analyzer circuit, IV-309
biquad filter, III-185
notch filter, II-400
tunable, IV-169
audio generators (*see* sound generators)
audio-operated circuits (*see* sound-operated circuits)
audio oscillators, I-64, II-24, III-427, IV-374, IV-375
20Hz to 20kHz, variable, I-727
light-sensitive, III-315
sine wave, II-562
audio power amplifier, II-451, III-454, IV-28-33
20-W, III-456
50-W, III-451
6-W, with preamp, III-454
audio amplifier, IV-32
audio amplifier, 8-W, IV-32
bridge, I-81
bull horn, IV-31
general-purpose, 5 W, ac power supply, IV-30
op amp, simple design, IV-33
receiver audio circuit, IV-31
stereo amp, 12-V/20-W, IV-29
audio scramblers, IV-25-27
voice scrambler/descrambler, IV-26
voice scrambler/disguiser, IV-27
audio signal amplifiers, II-41-47, IV-34-42
40 dB gain design, IV-36
audio compressor, II-44
auto fade, II-42
balance, II-46
balance and loudness amplifier, II-47
CD4049 design, IV-40
electric guitar, matching amplifier, IV-38
line amplifier, universal design, IV-39
loudness, II-46
low-noise design, IV-37
microphone preamp, II-45
micropower high-input-impedance 20-dB amplifier, II-44
power, II-46
preamplifier, 1000x, low-noise design, IV-37
preamplifier, general-purpose design, IV-42
preamplifier, impedance-matching, IV-37
preamplifier, low-noise, IV-41
preamplifier, magnetic phono cartridges, IV-35
preamplifier, microphone, IV-37, IV-42
preamplifier, microphone, low-impedance, IV-41
preamplifier, phono, low-noise, IV-36
preamplifier, phono, magnetic, ultra-low-noise, IV-36
stereo preamplifier, II-43, II-45
tape playback amplifiers, IV-36
transistor headphone amplifier, II-43
volume, II-46
audio-frequency doubler, IV-16-17
audio/video switcher circuit, IV-540-541
auto-advance projector, II-444
autodrum sound effect, II-591
auto-fade circuit, II-42
auto-flasher, I-299
auto-zeroing scale bridge circuits, III-69
automotive circuits, II-48-63, III-40-52, IV-43-67
alarms, automatic-arming, IV-50
alarms, automatic turn-off after 8-minute delay, IV-52
alarms, automatic turn-off with delay, IV-54
alarms, CMOS design, low-current, IV-56
alarms, horn as loudspeaker, IV-54
alarm, motion actuated, I-9
alarms, single-IC design, IV-55
air conditioner smart clutch, III-46
AM-radio to short-wave radio converter, IV-500
analog expanded-scale meter, IV-46
audio-amplifier, high-power, IV-66
automatic headlight dimmer, II-63
automobile locator, III-43
automotive exhaust emissions analyzer, II-51
back-up beeper, III-49, IV-51, IV-56
bar-graph voltmeter, II-54
battery charger, ni-cad, I-115
battery condition checker, I-108
battery current analyzer, I-104
battery monitor, I-106
battery supply circuit, ±15 V and 5 V, IV-391
battery-alternator monitor, III-63
brake lights, delayed extra, III-44
brake lights, flashing third, III-51
brake light, night-safety light for parked cars, IV-61
brake light, third brake light, IV-60
burglar alarm, I-3, I-7, I-10, II-2, III-4, III-7, IV-53
cassette-recorder power circuit, IV-548
courtesy light delay switch, III-42
courtesy light extender, III-50
delayed-action windshield wiper control, II-55
digi-tach, II-61
directional signals monitor, III-48
door ajar monitor, III-46
electric vehicles, battery saver, III-67
electrical tester, IV-45
electronic circuits, IV-63-67
fog light controller with delay, IV-59
fuel gauge, digital readout, IV-46
exhaust-gas emissions analyzer, II-51
garage stop light, II-53
glow plug driver, II-52
headlight alarm, I-109, III-52
headlight automatic-off controller, IV-61
headlight delay circuit, II-59, III-49
headlight dimmer, II-57
high-speed warning device, I-101
horn, III-50
ice formation alarm, II-58
ignition circuit, electronic ignition, IV-65
ignition cut-off, IV-53
ignition substitute, III-41
ignition timing light, II-60
immobilizer, II-50
intermittent windshield wiper with dynamic braking, II-49
light circuits, IV-57-62
lights-on warning, II-55, III-42, IV-58, IV-60, IV-62
night-safety light for parked cars, IV-61
oil-pressure gauge, digital readout, IV-44, IV-47

automotive circuits (*cont.*)
PTC thermistor automotive temperature indicator, II-56
radio, receiver for, II-525
read-head pre-amplifier, III-44
road ice alarm, II-57
security system, I-5, IV-49-56
tachometer, set point, III-47
tachometer/dwell meter, III-45
temperature gauge, digital readout, IV-48
temperature indicator, PTC thermistor, II-56
turn signals, sequential flasher, II-109, III-1
vacuum gauge, digital readout, IV-45
voltage gauge, IV-47
voltage regulator, III-48, IV-67
voltmeter, bargraph, I-99
water-temperature gauge, IV-44
wiper control, II-55, II-62
wiper delay, solid-state, IV-64
wiper interval controller, IV-67

B

B-field measurer, IV-272
back-biased GaAs LED light sensor, II-321
back-EMF PM motor speed control, II-379
backup-light beeper, automotive, IV-51, IV-56
bagpipe sound effect, IV-521
balance indicator, audio amplifiers, IV-215
balancer, stereo, I-619
barricade flasher, I-299
battery charge/discharge indicator, I-122
battery charger, automatic shut-off, II-113
balance amplifiers, III-46
loudness control, II-47, II-395
balance indicator, bridge circuit, II-82
bandpass filters (*see also* filter circuits), II-222
0.1 to 10 Hz bandpass, I-296
160 Hz, I-296
active, II-221, II-223, III-190
active, with 60dB gain, I-284
active, 1 kHz, I-284
active, 20 kHz, I-297
active, variable bandwidth, I-286
biquad, RC active, I-285
biquad, second-order, III-188
Chebyshev, fourth-order, III-191
high Q, I-287
MFB, multichannel tone decoder, I-288
multiple feedback, I-285, II-224
multiple feedback, 1.0 kHz, I-297
notch, II-223
Sallen-Key, 500 Hz, I-291
second-order biquad, III-188
state variable, I-290
tunable, IV-171
band reject filters, active (*see also* filter circuits), II-401
bang-bang power controllers, IV-389
bar-code scanner, III-363
bar-expanded scale meter, II-186
bar graphs
ac signal indicator, II-187
voltmeter, II-54
voltmeter, automotive, I-99
barometer, IV-273
bass tuners, II-362
12 V, I-111
200 mA-hour, 12V ni-cad, I-114
automatic shutoff for, I-113
batteries
fixed power supply, 12-VDC/120-VAC, III-464
high-voltage generator, III-482
zapper, simple ni-cad, I-116
battery chargers, I-113, II-64, II-69, III-53-59, IV-68-72
12-V charger, IV-70
battery-life extender, lead-acid batteries, IV-72
constant-voltage, current limited charger, I-115
control for 12V, I-112
current limited 6V, I-118, IV-70
gel cell, II-66
lead/acid, III-55
lithium, II-67
low-battery detector, lead-acid, III-56
low-battery warning, III-59
low-cost trickle for 12V storage, I-117
mobile battery charger, +12-Vdc, IV-71
ni-cad, I-118
ni-cad, portable, III-57, IV-69
ni-cad, temperature-sensing charger, IV-77
ni-cad, zapper, II-66
power supply and, 14V, III-4A, II-73
PUT, III-54
regulator, I-117
simpli-cad, I-112
solar cell, II-71
thermally controlled ni-cad, II-68
UJT, III-56
universal, III-56, III-58
versatile design, II-72
voltage detector relay, II-76
wind powered, II-70
zapper, simple ni-cad, I-116
battery monitors, I-106, II-74-79, III-60-67, IV-73-80
analyzer, ni-cad batteries, III-64
automatic shutoff, battery-powered projects, III-61
battery saver, electric vehicles, III-67
battery-life extender, 9 V, III-62
battery life-extender, disconnect switch, IV-75
capacity tester, III-66
condition checker, I-108, I-121
converter, dc-to-dc +3-to-+5 V, IV-119
disconnect switch, life-extender circuit, IV-75
dynamic, constant current load fuel cell/battery tester, II-75
internal resistance tester, IV-74
level indicator, II-124
lithium battery, state of charge indicator, II-78
low-battery detector, III-63, IV-76
low-battery indicator, I-124, II-77, IV-80
low-battery protector, III-65
low-battery warning/disconnect, III-65
protection circuit, ni-cad batteries, III-62
sensor, quick-deactivating, III-61
splitter, III-66
status indicator, II-77
step-up switching regulator for 6V, II-78
temperature-sensing battery charger, ni-cad batteries, IV-77
test circuit, IV-78
test circuit, ni-cad batteries, IV-79
threshold indicator, I-124
undervoltage indicator for, I-123
voltage, II-79
voltage detector relay in, II-76
voltage gauge, automotive battery, IV-47
voltage indicator, solid-state, I-120
voltage measuring regulator, IV-77
voltage monitor, II-79
voltage monitor, HTS, I-122
voltage-level indicator, IV-80
battery-life extender, 9 V, III-62, IV-75
battery-operated equipment
ac power control switch, battery-triggered, IV-387
automatic shutoff, III-61
automotive battery supply, ±15 V and 5 V, IV-391
automotive cassette-deck power

circuit, IV-548
bipolar power supply for, II-475
buffer amplifier for standard cell, I-351
fence charger, II-202
flasher, high powered, II-229
lantern circuit, I-380
light, capacitance operated, I-131
On indicator, IV-217
undervoltage indicator for, I-123
warning light, II-320
Baxandall tone-control audio amplifier, IV-588
BCD-to-analog converter, I-160
BCD-to-parallel converter, multiplexed, I-169
beacon transmitter, III-683
beep transformer, III-555, III-566
beepers
back-up, automotive circuits, III-49
repeater, I-19
bells
electronic, II-33, IV-9
electronic phone, I-636
benchtop power supply, II-472
bicycle speedometer, IV-271, IV-282
bilateral current source, III-469
binary counter, II-135
biomedical instrumentation differential amplifier, III-282
bipolar dc-dc converter with no inductor, II-132
bipolar power supply, II-475
bipolar voltage reference source, III-774
biquad audio filter, I-292-293, III-185
second-order bandpass, III-188
RC active bandpass, I-285
bird-chirp sound effect, II-588, III-577
bistable multivibrator, touch-triggered, I-133
bit grabber, computer circuits, IV-105
blinkers (*see* flashers and blinkers)
blown-fuse alarm, I-10
boiler control, I-638
bongos, electronic, II-587
boosters
12ns, II-97
audio, III-35, II-455
booster/buffer for reference current boost, IV-425
electronic, high-speed, II-96
forward-current, III-17
LED, I-307
power booster, op-amp design, IV-358
rf amplifiers, broadcast band booster, IV-487
shortwave FET, I-561
bootstrapping, cable, I-34
brake lights
extra, delayed, III-44
flashing, extra, III-51
brake, PWM speed control/energy recovering, III-380
breakers
12ns, II-97
high-speed electronic, II-96
breaker power dwell meter, I-102
breakout box, buffer, II-120
breath alert alcohol tester, III-359
breath monitor, III-350
bridge balance indicator, II-82
bridge circuits, I-552, II-80-85, III-68-71, IV-81-83
ac, II-81
ac servo amplifier with, III-387
accurate null/variable gain circuit, III-69
air-flow sensing thermistor bridge, IV-82
auto-zeroing scale, III-69
balance indicator, II-82
bridge transducer amplifier, III-71
crystal-controlled bridge oscillator, IV-127
differential amplifier, two op-amp, II-83
inductance bridge, IV-83
load driver, audio circuits, III-35
low power common source amplifier, II-84
one-power supply design, IV-83
QRP SWR, III-336
rectifier, fixed power supplies, IV-398
remote sensor loop transmitter, III-70
strain gauge signal conditioner, II-85, III-71
transducer, amplifier for, II-84
Wien bridge, variable oscillator, III-424
Wien-bridge filter, III-659
Wien-bridge oscillator, III-429
Wien-bridge oscillator, low-distortion, thermally stable, III-557
Wien-bridge oscillator, low-voltage, III-432
Wien-bridge oscillator, single-supply, III-558
brightness controls, III-308
LED, I-250
low loss, I-377
broadband communications
ac active rectifier, IV-271
broadcast-band rf amplifier, II-546, III-264
buck converter, 5V/0.5A, I-494
buck/boost converter, III-113
bucking regulator, high-voltages, III-481
buffers, IV-88-90
ac, single-supply, high-speed, I-127-128
ADC input, high-resolution, I-127
A/D, 6-bit, high-speed, I-127
booster/buffer for reference current boost, IV-425
capacitance, stabilized low-input, III-502
input/output, for analog multiplexers, III-11
inverting bistable buffer, IV-90
oscillator buffers, IV-89
precision-increasing design, IV-89
rf amplifiers, buffer amplifier with modulator, IV-490
stable, high-impedance, I-128
unity gain, stable, good speed and high-input impedance, II-6
video, low-distortion, III-712
wideband, high-impedance/low-capacitance I-127
buffer amplifiers
10x, I-128
100x, I-128
ac, single-supply, I-126
battery-powered, standard cell, I-351
sinewave output, I-126
unity-gain, stable design, II-6
buffered breakout box, II-120
bug detector, III-365
bug tracer, III-358
bull horn, II-453, IV-31
burglar alarms (*see* alarms)
burst generators (*see also* function generators; sound generators; waveform generators), II-86-90, III-72-74
multi-, square waveform, II-88
rf, portable, III-73
single timer IC square wave, II-89
single-tone, II-87
strobe-tone, I-725, II-90
tone, II-90
tone burst, European repeaters, III-74
burst power control, III-362
bus interface, eight bit uP, II-114
Butler oscillators
aperiodic, I-196
common base, I-191
emitter follower, II-190-191, II-194
Butterworth filter, high-pass, fourth-order, I-280
buzzers
door buzzer, IV-8

buzzers (*cont.*)
continuous tone 2kHZ, I-11
gated 2kHz, I-12

C

cable bootstrapping, I-34
cable tester, III-539
calibrated circuit, DVM auto, I-714
calibrated tachometer, III-598
calibration standard, precision, I-406
calibrators
crystal, 100 kHz, I-185
electrolytic-capacitor reforming circuit, IV-276
ESR measurer, IV-279
oscilloscope, II-433, III-436
portable, I-644
square-wave, 5 V, I-423
tester, IV-265
wave-shaping circuits, high slew rates, IV-650
cameras (*see* photography-related circuits; television-related circuits; video circuits)
canceller, central image, III-358
capacitance buffers
low-input, III-498
low-input, stabilized, III-502
capacitance meters, I-400, II-91-94, III-75-77
A/D, three-and-a-half digit, III-76
capacitance-to-voltage, II-92
digital, II-94
capacitance multiplier, I-416, II-200
capacitance relay, I-130
capacitance switched light, I-132
capacitance-to-pulse width converter, II-126
capacitance-to-voltage meter, II-92
capacitor discharge
high-voltage generator, III-485
ignition system, II-103
capacity tester, battery, III-66
car port, automatic light controller, II-308
cars (*see* automotive circuits)
carrier-current circuits, III-78-82, IV-91-93
AM receiver, III-81
audio transmitter, III-79
data receiver, IV-93
data transmitter, IV-92
FM receiver, III-80
intercom, I-146
power-line modem, III-82
receiver, I-143
receiver, single transistor, I-145
receiver, IC, I-146
remote control, I-146
transmitter, I-144
transmitter, integrated circuit, I-145
carrier-operated relay (COR), IV-461
carrier system receiver, I-141
carrier transmitter with on/off 200kHz line, I-142
cascaded amplifier, III-13
cassette bias oscillator, II-426
cassette interface, telephone, III-618
cassette-recorders (*see* tape-recorder circuits)
centigrade thermometer, I-655, II-648, II-662
central image canceller, III-358
charge pool power supply, III-469
charge pumps
positive input/negative output, I-418, III-360
regulated for fixed power supplies, IV-396
chargers (*see* battery charger)
chase circuit, I-326, III-197
Chebyshev filters (*see also* filter circuits)
bandpass, fourth-order, III-191
fifth-order multiple feedback low-pass, II-219
high-pass, fourth-order, III-191
chime circuit, low-cost, II-33
chopper amplifier, I-350, II-7, III-12
checkers
buzz box continuity and coil, I-551
car battery condition, I-108
crystal, I-178, I-186
zener diode, I-406
chroma demodulator with RGB matrix, III-716
chug-chug sound generator, III-576
circuit breakers (*see also* protection circuits)
12ns, II-97
ac, III-512
high-speed electronic, II-96
trip circuit, IV-423
circuit protection (*see* protection circuits)
clamp-on-current probe compensator, II-501
clamp-limiting amplifiers, active, III-15
clamping circuits
video signal, III-726
video summing amplifier and, III-710
class-D power amplifier, III-453
clippers, II-394, IV-648
audio-powered noise, II-396
audio clipper/limiter, IV-355
zener-design, fast and symmetrical, IV-329
clock circuits, II-100-102, III-83-85
60Hz clock pulse generator, II-102
adjustable TTL, I-614
comparator, I-156
crystal oscillators, micropower design, IV-122
digital, with alarm, III-84
gas discharge displays, 12-hour, I-253
oscillator/clock generator, III-85
phase lock, 20-Mhz to Nubus, III-105
run-down clock for games, IV-205
sensor touch switch and clock, IV-591
single op amp, III-85
source, clock source, I-729
three-phase from reference, II-101
TTL, wide-frequency, III-85
Z80 computer, II-121
clock generators
oscillator, I-615, III-85
precision, I-193
pulse generator, 60 Hz, II-102
clock radio, I-542
AM/FM, I-543
CMOS circuits
555 astable true rail to rail square wave generator, II-596
9-bit, III-167
coupler, optical, III-414
crystal oscillator, III-134
data acquisition system, II-117
flasher, III-199
inverter, linear amplifier from, II-11
mixer, I-57
optical coupler, III-414
oscillator, III-429, III-430
short-pulse generator, III-523
timer, programmable, precision, III-652
touch switch, I-137
universal logic probe, III-499
coaxial cable, five-transistor pulse booster, II-191
Cockcroft-Walton cascaded voltage doubler, IV-635
code-practice oscillator, I-15, I-20, I-22, II-428-431, IV-373, IV-375, IV-376
coil drivers, current-limiting, III-173
coin flipper circuit, III-244
color amplifier, video, III-724
color-bar generator, IV-614
color organ, II-583, II-584
color video amplifier, I-34
Colpitts crystal oscillator, I-194, I-572, II-147
1-to-20 MHz, IV-123
frequency checker, IV-301

harmonic, I-189-190
two-frequency, IV-127
combination locks
electronic, II-196
electronic, three-dial, II-195
commutator, four-channel, II-364
companders (*see* compressor/expander circuits)
comparators, I-157, II-103-112, III-86-90
demonstration circuit, II-109
diode feedback, I-150
display and, II-105
double-ended limit, I-156, II-105
dual limit, I-151
four-channel, III-90
frequency, II-109
frequency-detecting, III-88
high-impedance, I-157
high-input impedance window comparator, II-108
high-low level comparator with one op amp, II-108
latch and, III-88
LED frequency, II-110
limit, II-104, I-156
low-power, less than 10uV hysteresis, II-104
microvolt, dual limit, III-89
microvolt, with hysteresis, III-88
monostable using, II-268
opposite polarity input voltage, I-155
oscillator, tunable signal, I-69
power supply overvoltage, glitch detection with, II-107
precision, balanced input/variable offset, III-89
precision, photodiode, I-360, I-384
time-out, I-153
TTL-compatible Schmitt trigger, II-111
three-input and gate comparator, op-amp design, IV-363
variable hysteresis, I-149
voltage comparator, IV-659
voltage monitor, II-104
window, I-152, I-154, II-106, III-87, III-90, III-776-781, IV-656-658
with hysteresis, I-157
with hysteresis, inverting, I-154
with hysteresis, noninverting, I-153
compass
digital design, IV-147
Hall-effect, III-258
compensator, clamp-on-current probe, II-501
composite amplifier, II-8, III-13
composite-video signal text adder, III-716
compressor/expander circuits, III-91-95, IV-94-97
amplifier/compressor, low-distortion, IV-24
audio, II-44
audio compressor/audio-band splitter, IV-95
clock circuit, I-156
guitar, sound-effect circuit, IV-519
hi-fi, II-12, II-13
hi-fi, de-emphasis, III-95
hi-fi, pre-emphasis, III-93
low-voltage, III-92
protector circuit, IV-351
speech, II-2
universal design, IV-96-97
variable slope, III-94
computalarm, I-2
computer circuits (*see also* interfaces), II-113-122, III-96-108, IV-98-109
analog signal attenuator, III-101
alarm, I-2
ASCII triplex LCD, 8048/IM80C48 8-char/16-seg, II-116
bit grabber, IV-105
buffered breakout box, II-120
bus interface, 8-bit uP, II-114
clock phase lock, 20-Mhz-to-Nubus, III-105
CMOS data acquisition system, II-117
CPU interface, one-shot design, IV-239
data separator for floppy disks, II-122
deglitcher, IV-109
display, eight-digit, III-106
dual 8051s execute in lock-step circuit, IV-99
EEPROM pulse generator, 5V-powered, III-99
eight-channel mux/demux system, II-115
eight-digit microprocessor display, III-106
flip-flop inverter, spare, III-103
high-speed data acquisition system, II-118
interface, 680x, 650x, 8080 families, III-98
interval timer, programmable, II-678
keyboard matrix interface, IV-240
line protectors, 3 uP I/O, IV-101
logic-level translators, IV-242
logic line monitor, III-108
long delay line, logic signals, III-107
memory/protector power supply monitor, IV-425
memory saving power supply for, II-486
microprocessor selected pulse width control, II-116
multiple inputs detector, III-102
one-of-eight channel transmission system, III-100
oscilloscope digital-levels, IV-108
power supply watchdog, II-494
pulse width control, II-116
printer-error alarm, IV-106
reset protection, IV-100
reset switch, child-proof, IV-107
RGB blue box, III-99
RS-232 dataselector, automatic, III-97
RS-232C line-driven CMOS circuits, IV-104
RS-232-to-CMOS line receiver, III-102
RS-232C LED circuit, III-103
short-circuit sensor, remote data lines, IV-102
signal attenuator, analog, microprocessor-controlled, III-101
socket debugger, coprocessor, III-104
speech synthesizer, III-732
stalled-output detector, IV-109
switch debouncer, IV-105
switch debouncer, auto-repeat, IV-106
triac array driver, II-410
uninterruptible power supply, II-462
Vpp generator for EPROMs, II-114
XOR gate, IV-107
XOR gate up/down counter, III-105
Z-80 bus monitor/debugger, IV-103
Z80 clock, II-121
contact switch, I-136
continuity testers, II-533, II-535, III-345, III-538-540, IV-287, IV-289, IV-296
audible, adjustable, II-536
cable tester, III-539
latching design, IV-295
PCB, II-342, II-535
contrast meters, II-447
automatic, I-472
control circuits (*see also* alarms; detectors; indicators; monitors; motor control circuits; sensors), III-378-390
ac servo amplifier, bridge-type, III-387
boiler, I-638
brightness, low-loss, I-377
fan speed, III-382
feedback speed, I-447
floodlamp power, I-373
fluid level, I-387

control circuits (*cont.*)
full-wave SCR, I-375
heater, I-639
hi-fi tone, high-Z input, I-676
high-power, sensitive contacts for, I-371
LED brightness, I-250
light-level, I-380
light-level, 860 W limited-range low-cost, I-376
light-level, brightness, low-loss, I-377
liquid level, I-388
model train and/or car, I-453, I-455
motor controllers (*see* motor control circuits)
on/off, I-665
phase control, hysteresis-free, I-373
power tool torque, I-458
sensitive contact, high power, I-371
servo system, III-384
single-setpoint temperature, I-641
speed control (*see* speed controllers)
switching, III-383
temperature, I-641-643
temperature-sensitive heater, I-640
three-phase power-factor, II-388
tone control (*see* tone controls)
voltage-control, pulse generator and, III-524
water-level sensing, I-389
windshield wiper, I-105
conversion and converters, I-503, II-123-132, III-109-122, IV-110-120
3-5 V regulated output, III-739
4-18 MHz, III-114
4-to-20-mA current loop, IV-111
5V-to-isolated 5V at 20MA, III-474
5V/0.5A buck, I-494
9-to-5 V converter, IV-119
12 V- to 9-, 7.5-, or 6-V, I-508
12-to-16 V, III-747
+50V feed forward switch mode, I-495
+50 V push-pull switched mode, I-494
100 MHz, II-130
100 V/10.25 A switch mode, I-501
ac-to-dc, I-165
ac-to-dc, high-impedance precision rectifier, I-164
analog-to-digital (*see* analog-to-digital conversion)
ATV rf receiver/converter, IV-420
MHz, low-noise, IV-496, IV-497
BCD-to-analog, I-160
BCD-to-parallel, multiplexed, I-169
buck/boost, III-113
calculator-to-stopwatch, I-153
capacitance-to-pulse width, II-126
current-to-frequency, IV-113
current-to-frequency, wide-range, I-164
current-to-voltage, I-162, I-165
current-to-voltage, grounded bias and sensor, II-126
current-to-voltage, photodiode, II-128
dc-dc, 3-25 V, III-744, IV-118
dc-to-dc, +3-to-+5 V battery, IV-119
dc-to-dc, 1-to-5 V, IV-119
dc-to-dc, bipolar, no inductor, II-132
dc-to-dc, fixed 3- to 15-V supplies, IV-400
dc-to-dc, isolated +15V., III-115
dc-to-dc, push-pull, 400 V, 60 W, I-210
dc-to-dc, regulating, I-210, I-211, II-125, III-121
dc-to-dc, step up-step down, III-118
digital-to-analog (*see* digital-to-analog conversion)
fixed power supply, III-470
flyback, I-211
flyback, self oscillating, I-170, II-128
flyback, voltage, high-efficiency, III-744
frequency, I-159
frequency-to-voltage (*see* frequency-to-voltage conversion)
high-to-low impedance, I-41
intermittent converter, power-saving design, IV-112
light intensity-to-frequency, I-167
logarithmic, fast-action, I-169
low-frequency, III-111
ohms-to-volts, I-168
oscilloscope, I-471
period-to-voltage, IV-115
pico-ampere, 70 voltage with gain, I-170
PIN photodiode-to-frequency, III-120
polarity, I-166
positive-to-negative, III-112, III-113
peak-to-peak, ac-dc, precision, II-127
pulse height-to-width, III-119
pulse train-to-sinusoid, III-122
pulse width-to-voltage, III-117
radio beacon converter, IV-495
rectangular-to-triangular waveform, IV-116-117
regulated 15-Vout 6-V driven, III-745
resistance-to-voltage, I-161-162
RGB-composite video signals, III-714
RMS-to-dc, II-129, I-167
RMS-to-dc, 50-MHz thermal, III-117
RGB-to-NTSC, IV-611
sawtooth wave converter, IV-114
shortwave, III-114
simple LF, I-546
sine-to-square wave, I-170, IV-120
square-to-sine wave, III-118
square-to-triangle wave, TTL, II-125
temperature-to-frequency, I-168
temperature-to-time, III-632-633
triangle-to-sine wave, II-127
TTL-to-MOS logic, II-125, I-170
two-wire to four-wire audio, II-14
unipolar-to-dual voltage supply, III-743
video, a/d and d/a, IV-610-611
video, RGB-to-NTSC, IV-611
VLF, I-547
VLF, rf converter, IV-497
voltage ratio-to-frequency, III-116
voltage, III-742-748, III-742
voltage, negative voltage, uP-controlled, IV-117
voltage, offline, 1.5-W, III-746
voltage-to-current, I-166, II-124, III-110, IV-118
voltage-to-current, power, I-163
voltage-to-current, zero IB error, III-120
voltage-to-frequency (*see* voltage-to-frequency conversion)
voltage-to-pulse duration, II-124
WWV-to-SW rf converter, IV-499
coprocessor socket debugger, III-104
countdown timer, II-680
counters, II-133-139, III-123-130
analog circuit, II-137
attendance, II-138
binary, II-135
divide-by-N, CMOS programmable, I-257
divide-by-*n*, 1+ GHz, IV-155
divide-by-odd-number, IV-153
frequency, III-340, III-768, IV-300
frequency, 1.2 GHz, III-129
frequency, 10-MHz, III-126
frequency, 100 MHz, periodic, II-136
frequency, low-cost, III-124
frequency, preamp, III-128
frequency, tachometer and, I-310
geiger, I-536-537
microfarad counter, IV-275
odd-number divider and, III-217
preamplifier, oscilloscope, III-438
precision frequency, I-253
programmable, low-power wide-range, III-126
ring, 20 kHz, II-135
ring, incandescent lamp, I-301
ring, low cost, I-301
ring, low-power pulse circuit, IV-437

ring, SCR, III-195
ring, variable timing, II-134
time base , function generators, 1 Hz, IV-201
universal, 10 MHz, I-255, II-139
universal, 40-MHz, III-127
up/down, 8-digit, II-134
up/down, extreme count freezer, III-125
up/down, XOR gate, III-105
couplers
linear, ac analog, II-412
linear, analog, II-413
linear, dc, II-411
optical, CMOS design, III-414
optical, TTL design, III-416
photon, II-412
transmitter oscilloscope for CB signals, I-473
courtesy light delay/extender, I-98, III-42, III-50
CRO doubler, III-439
cross-fader, II-312
cross-hatch generator, color TV, III-724
crossover networks, II-35
5V, I-518
ac/dc lines, electronic, I-515
active, I-172
active, asymmetrical third order Butterworth, I-173
electronic circuit for, II-36
crowbars, I-516
electric, III-510
electronic, II-99
SCR, II-496
crystal oscillators (*see also* oscillators), I-180, I-183-185, I-195, I-198, II-140-151, III-131-140, IV-121-128
1-to-20 MHz, TTL design, IV-127
1-to-4 MHz, CMOS design, IV-125
10 MHz, II-141
10-to-150 kHz, IV-125
10-to-80 MHz, IV-125
50-to-150 MHz, IV-126
96 MHz, I-179
150-to-30,000 kHz, IV-126
330 MHz, IV-125
aperiodic, parallel-mode, I-196
bridge, crystal-controlled, IV-127
Butler oscillator, I-182
calibrator, 100 kHz, I-185, IV-124
ceramic, 10 MHz, varactor tuned, II-141
clock, micropower design, IV-122
CMOS, I-187, III-134
CMOS, 1-to-4 MHz, IV-125
Colpitts, II-147
Colpitts, 1-to-20 MHz, IV-123
Colpitts, frequency checker, IV-301
Colpitts, two-frequency, IV-127
crystal-controlled oscillator as, II-147
crystal-stabilized IC timer for subharmonic frequencies, II-151
crystal tester, I-178, I-186, II-151
doubler and, I-184
easy start-up, III-132
FET, 1 MHz, II-144
fundamental-frequency, III-132
high-frequency, I-175, II-148
high-frequency signal generator as, II-150
IC-compatible, II-145
LO for SSB transmitter controlled by, II-142
low-frequency, I-184, II-146
low-frequency, 10 kHz to 150 kHz, II-146
low-noise, II-145
OF-1 HI oscillator, international, I-197
OF-1 LO oscillator, international, I-189
overtone, I-176, I-180, I-183, II-146
overtone, 100 MHz, IV-124
marker generator, III-138
mercury cell crystal-controlled oscillator as, II-149
overtone, I-176, I-177, I-180, I-186, III-146
Pierce, II-144
Pierce, 1-MHz, III-134
Pierce, JFET, I-198
Pierce, low-frequency, III-133
quartz, two-gate, III-136
reflection oscillator, crystal-controlled, III-136
Schmitt trigger, I-181
signal source controlled by, II-143
sine-wave oscillator, I-198
stable low frequency, I-198
standard, 1 MHz, I-197
temperature-compensated, I-187, III-137
temperature-compensated, 5V driven, low-power, II-142
third-overtone, I-186, IV-123
time base, economical design, IV-128
TTL design, I-179
TTL design, 1-to-20 MHz, IV-127
TTL-compatible, I-197
transistorized, I-188
tube-type, I-192
VHF, 20-MHz, III-138
VHF, 50-MHz, III-140
VHF, 100-MHz, III-139
voltage-controlled, III-135, IV-124
crystal switching, overtone oscillator with, I-183
current analyzer, auto battery, I-104
current booster, I-30, I-35
current collector head amplifier, II-11, II-295
current loop, 4-to-20-mA converter, IV-111
current meters and monitors, I-203, II-152-157, III-338
ac current indicator, IV-290
current sensing in supply rails, II-153
electrometer amplifier with overload protection, II-155
Hall-effect circuit, III-255
Hall-sensor, IV-284
high-gain current sensor, IV-291
pico ammeter, II-154, II-157
pico ammeter, guarded input, II-156
range ammeter, six-decade, II-153, II-156
current readout, rf, I-22
current sensing, supply rails, II-153
current sink, I-206
1 mA for fixed power supplies, IV-402
voltage-controlled, IV-629
current sources, I-205, I-697
0-to-200-nA, IV-327
bilateral, III-469, I-694-695
bipolar, inverting, I-697
bipolar, noninverting, I-695
constant, I-697, III-472
fixed power supplies, bootstrapped amp, IV-406
fixed power supplies, differential-input, fast-acting, IV-405
low-current source, fixed power supplies, IV-399
precision, I-205
precision, 1mA to 1mA, I-206
regulator, variable power supply, III-490
variable power supplies, voltage-programmable, IV-420
voltage-controlled, grounded source/load, III-468
current-loop controller, SCR design, IV-387
current-shunt amplifiers, III-21
current-to-frequency converter, IV-113
wide range, I-164
current-to-voltage amplifier, high-speed, I-35
current-to-voltage converter, I-162, I-165
grounded bias and sensor in, II-126
photodiode, II-128
curve tracer
diodes, IV-274
FET, I-397
CW radio communications

CW radio communications (*cont.*)
filter, razor sharp, II-219
keying circuits, IV-244
offset indicator, IV-213
SSB/CW product detector, IV-139
transceiver, 5 W, 80-meter, IV-602
transmitter, 1-W, III-678
transmitter, 40-M, III-684
transmitter, 902-MHz, III-686
transmitter, HF low-power, IV-601
transmitter, QRP, III-690
cyclic A/D converter, II-30

D

darkroom equipment (*see* photography-related circuits)
Darlington regulator, variable power supplies, IV-421
data-manipulation circuits, IV-129-133
acquisition circuits, CMOS system, II-117
acquisition circuits, four-channel, I-421
acquisition circuits, high-speed system, II-118
analog-signal transmission isolator, IV-133
data-acquisition systems, IV-131
link, IR type, I-341
prescaler, low-frequency, IV-132
read-type circuit, 5 MHz, phase-encoded, II-365
receiver/message demuxer, three-wire, IV-130
selector, RS-232, III-97
separator, floppy disk, II-122
data transmission
receiver, carrier-current circuit design, IV-93
transmitter, carrier-current circuit design, IV-92
dc adapter/transceiver, hand-held, III-461
dc generators, high-voltage, III-481
dc restorer, video, III-723
dc servo drive, bipolar control input, II-385
dc static switch, II-367
dc-to-dc converters, IV-118
1-to-5 V, IV-119
3-25 V, III-744
bipolar, no inductor, II-132
dual output ± 12-15 V, III-746
fixed power supplies, 3-to-15 V, IV-400
isolated +15 V, III-115
push-pull, 400 V, 60 W, I-210
regulated, I-210, I-211, II-125, III-121
step up/step down, III-118
dc-to-dc SMPS variable power supply, II-480
debouncer, III-592, IV-105
auto-repeat, IV-106
flip-flop, IV-108
debugger, coprocessor sockets, III-104
decibel level detector, audio, with meter driver, III-154
decoders, II-162, III-141-145
10.8 MHz FSK, I-214
24-percent bandwidth tone, I-215
direction detector, III-144
dual-tone, I-215
encoder and, III-144
frequency division multiplex stereo, II-169
PAL/NTSC, with RGB input, III-717
radio control receiver, I-574
SCA, I-214, III-166, III-170
second-audio program adapter, III-142
sound-activated, III-145
stereo TV, II-167
time division multiplex stereo, II-168
tone alert, I-213
tone dial, I-631
tone dial sequence, I-630
tone, I-231, III-143
tone, dual time constant, II-166
tone, relay output, I-213
video, NTSC-to-RGB, IV-613
weather-alert detector/decoder, IV-140
deglitcher circuit, computer circuits, IV-109
delay circuits/ delay units, III-146-148
adjustable, III-148
door chimes, I-218
headlights, I-107, II-59
leading-edge, III-147
long duration time, I-217, I-220
precision solid state, I-664
pulse, dual-edge trigger, III-147
time delay, constant-current charging, II-668
time delay, simple design, I-668, II-220
windshield wiper delay, I-97, II-55
delay line, analog, echo and reverb effects, IV-21
delayed pulse generator, II-509
delay relay, ultra-precise long time, II-211
demodulators, II-158-160, III-149-150
5V FM, I-233
12V FM, I-233
565 SCA, III-150
AM, II-160
chroma, with RGB matrix, III-716
FM, II-161
FM, narrow-band, carrier detect, II-159
linear variable differential transformer driver, I-403
LVDT circuit, III-323-324, III-323
LVDT driver, II-337
stereo, II-159
telemetry, I-229
demonstration comparator circuit, II-109
demultiplexer, III-394
descramblers, II-162
gated pulse, II-165
outband, II-164
sine wave, II-163
derived center-channel stereo system, IV-23
detect-and-hold circuit, peak, I-585
detection switch, adjustable light, I-362
detectors (*see also* alarms; control circuits; indicators; monitors; sensors), II-171-178, III-151-162, IV-134-145
air flow, I-235, II-240-242
air motion, I-222, III-364
air-pressure change, IV-144
amplifier, four quadrant photoconductive, I-359
angle of rotation, II-283
bug, III-365
controller circuit, IV-142
decibel level, audio, with meter driver, III-154
direction detector, thermally operated, IV-135
double-ended limit, I-230, I-233
duty-cycle, IV-144
edge, III-157, I-226
electrostatic, III-337
envelope detector, III-155
envelope detector, AM signals, IV-142
envelope detector, low-level diodes, IV-141
flame, III-313
flow, III-202-203
flow, low-rate thermal, III-203
fluid and moisture, II-243, II-248, III-204-210, IV-184-191
frequency limit, II-177
frequency window, III-777
frequency, digital, III-158
frequency-boundary, III-156

gas, II-278, III-246-253
gas and smoke, I-332
gas and vapor, II-279
ground-fault Hall detector, IV-208-209
high-frequency peak, II-175
high-speed peak, I-232
IC product detector, IV-143
infrared, II-289, III-276, IV-224
IR, long-range objects, III-273
level, II-174
level, with hysteresis, I-235
lie detector, IV-206
light detector, IV-369
light interruption, I-364
light level, III-316
light level, level drop, III-313
line-current, optically coupled, III-414
liquid level, I-388, I-390
low-level video, video IF amplifier, I-687-689
low-line loading ring, I-634
low-voltage, I-224
magnet, permanent-magnet detector, IV-281
magnetic transducer, I-233
MC1330/MC1352 television IF amplifier, I-688
metal, II-350-352, IV-137
missing pulse, I-232, III-159
moisture, I-442
motion, IV-341-346
motion, UHF, III-516
multiple-input, computer circuit, III-102
negative peak, I-234
nuclear particle, I-537
null, I-148, III-162
peak program, III-771
peak, II-174, II-175, IV-138, IV-143
peak, analog, with digital hold, III-153
peak, digital, III-160
peak, high-bandwidth, III-161
peak, low-drift, III-156
peak, negative, I-225
peak, op amp, IV-145
peak, positive, III-169
peak, wide-bandwidth, III-162
peak, wide-range, III-152
peak voltage, precision, I-226
people-detector, infrared-activated, IV-225
pH level, probe and, III-501
phase, III-440-442
phase, 10-bit accuracy, II-176
photodiode level, precision, I-365
positive peak, I-225, I-235
power loss, II-175
product, I-223, I-861
proximity, I-344, II-135, II-136, IV-341-346
pulse coincidence, II-178
pulse sequence, II-172
pulse-width, out-of-bounds, III-158
radar (*see* radar detector)
radiation (*see* radiation detector)
resistance ratio, II-342
rf, II-500, IV-139
rf detector probe, IV-433
Schmitt trigger, III-153
smoke, II-278, III-246-253, IV-140
smoke, ionization chamber, I-332-333
smoke, operated ionization type, I-596
smoke, photoelectric, I-595
speech activity on phone lines, II-617, III-615
SSB/CW product detectors, IV-139
stalled computer-output detector, IV-109
static detector, IV-276
telephone ring, III-619, IV-564
telephone ring, optically interfaced, III-611
threshold, precision, III-157
tone, 500-Hz, III-154
toxic gas, II-280
true rms, I-228
TV sound IF/FM IF amplifier with quadrature, I-690
two-sheets in printer detector, IV-136
ultra-low drift peak, I-227
undervoltage detector, IV-138
video, low-level video IF amplifier, I-687-689
voltage level, I-8, II-172
weather-alert decoder, IV-140
window, I-235, III-776-781, IV-658
zero crossing, I-732, I-733, II-173
zero crossing, with temperature sensor, I-733
deviation meter, IV-303
dial pulse indicator, telephone, III-613
dialers, telephone
pulse-dialing telephone, III-610
pulse/tone, single-chip, III-603
telephone-line powered repertory, I-633
tone-dialing telephone, III-607
dice, electronic, I-325, III-245, IV-207
differential amplifiers, I-38, III-14
high-impedance, I-27, I-354
high-input high-impedance, II-19
instrumentation, I-347, III-283
instrumentation, biomedical, III-282
programmable gain, III-507
two op amp bridge type, II-83
differential analog switch, I-622
differential capacitance measurement circuit, II-665
differential hold, I-589, II-365
differential multiplexers
demultiplexer/, I-425
wide band, I-428
differential thermometer, II-661, III-638
differential voltage or current alarm, II-3
differentiators, I-423
negative-edge, I-419
positive-edge, I-420
digital-capacitance meter, II-94
digital-IC, tone probe for testing, II-504
digital-frequency meter, III-344
digital-logic probe, III-497
digital audio tape (DAT)
ditherizing circuit, IV-23
digital multimeter (DMM)
high-resistance-measuring, IV-291
digital oscillator, resistance controlled, II-426
digital transmission isolator, II-414
digital voltmeters (DVM)
3.5-digit, common anode display, I-713
3.5-digit, full-scale, four-decade, III-761
3.75-digit, I-711
4.5-digit, III-760
4.5-digit, LCD display, I-717
auto-calibrate circuit, I-714
automatic nulling, I-712
interface and temperature sensor, II-647
digital-to-analog converters, I-241, II-179-181, III-163-169
0-to -5V output, resistor terminated, I-239
3-digit, BCD, I-239
8-bit, I-240-241
8-bit, high-speed, I-240
8-bit, output current to voltage, I-243
8-bit to 12-bit, two, II-180
9-bit, CMOS, III-167
10-bit, I-238
10-bit, 4-quad, offset binary coding, multiplying, I-241
+10V full scale bipolar, I-242
+10V full scale unipolar, I-244
12-bit, binary two's complement, III-166

digital-to-analog converters (*cont.*)
12-bit, precision, I-242
12-bit, variable step size, II-181
14-bit binary, I-237
16-bit binary, I-243
fast voltage output, I-238
high-speed voltage output, I-244
multiplying, III-168
output amplifier, four-channel, III-165
video converter, IV-610-611
digitizer, tilt meter, III-644-646
dimmers (*see* lights/light-activated and controlled circuits)
diode emitter driver, pulsed infrared, II-292
diode tester, II-343, III-402
go/no-go, I-401
zener diodes, I-406
diode-matching circuit, IV-280
dip meters, I-247, II-182-183
basic grid, I-247
dual gate IGFET, I-246
little dipper, II-183
varicap tuned FET, I-246
diplexer/mixer, IV-335
direction detector, thermally operated, IV-135
direction detector decoder, III-144
direction finders, IV-146-149
compass, digital design, IV-147
radio-signal direction finder, IV-148-149
direction-of-rotation circuit, III-335
directional-signals monitor, auto, III-48
disco strobe light, II-610
discrete current booster, II-30
discrete sequence oscillator, III-421
discriminators
multiple-aperture, window, III-781
pulse amplitude, III-356
pulse width, II-227
window, III-776-781
display circuits, II-184-188, III-170-171
3 1/2 digit DVM common anode, II-713
60-dB dot mode, II-252
audio, LED bar peak program meter, II-254
bar-graph indicator, ac signals, II-187
brightness control, III-316
comparator and, II-105
exclamation point, II-254
expanded scale meter, dot or bar, II-186
LED bar graph driver, II-188
LED matrix, two-variable, III-171
oscilloscope, eight-channel voltage, III-435
dissolver, lamp, solid-state, III-304
distribution circuits, II-35
distribution amplifiers
audio, I-39, II-39
signal, I-39
dividers, IV-150-156
1+ GHz divide-by-*n* counter, IV-155
7490-divided-by-*n* circuits, IV-154
binary chain, I-258
counter, divide-by-odd-number, IV-153
divide-by-2-or-3 circuit, IV-154
divide-by-*n* + 1/2 circuit, IV-156
frequency, I-258, II-254, III-213-218
frequency divider, clock input, IV-151
frequency, decade, I-259
frequency, divide-by-1 1/2, III-216
frequency, low frequency, II-253
frequency divider, programmable, IV-152-153
mathematical, one trim, III-326
odd-number counter and, III-217
pulse, non-integer programmable, II-511, III-226
Dolby noise reduction circuits, III-399
decode mode, III-401
encode mode, III-400
door bells/chimes, I-218, I-443, IV-8
buzzer, two-door, IV-10
musical-tone, IV-522
rain alarm, I-443
single-chip design, IV-524
sliding tone, II-34
door-open alarm, II-284, III-46
Hall-effect circuit, III-256
door opener, III-366
dot-expanded scale meter, II-186
double-sideband suppressed-carrier modulator, III-377
double-sideband suppressed-carrier rf, II-366
doublers
0 to 1MHz, II-252
150 to 300 MHz, I-314
audio-frequency doubler, IV-16-17
broadband frequency, I-313
CRO, oscilloscope, III-439
crystal oscillator, I-184
frequency, I-313, III-215
frequency, digital, III-216
frequency, GASFET design, IV-324
frequency, single-chip, III-218
low-frequency, I-314
voltage, III-459
voltage, triac-controlled, III-468
downbeat-emphasized metronome, III-353-354
drivers and drive circuits, I-260, II-189-193, III-172-175, IV-157-160
50 ohm, I-262
bar-graph driver, transistorized, IV-213
BIFET cable, I-264
bridge loads, audio circuits, III-35
capacitive load, I-263
coaxial cable, I-266, I-560
coaxial cable, five-transistor pulse boost, II-191
coil, current-limiting, III-173
CRT deflection yoke, I-265
demodulator, linear variable differential transformer, I-403
fiber optic, 50-Mb/s, III-178
flash slave, I-483
glow plug, II-52
high-impedance meter, I-265
instrumentation meter, II-296
lamp, I-380
lamp, flip-flop independent, IV-160
lamp, low-frequency flasher/relay, I-300
lamp, optically coupled, III-413
lamp, short-circuit proof, II-310
laser diode, high-speed, I-263
LED, bar graph, II-188
LED, emitter/follower, IV-159
line signals, 600-ohm balanced, II-192
line, I-262
line, 50-ohm transmission, II-192
line, full rail excursions in, II-190
line-synchronized, III-174
load, timing threshold, III-648
LVDT demodulator and, II-337, III-323-324
meter-driver rf amplifier, 1-MHz, III-545
microprocessor triac array, II-410
motor drivers (*see* motor control, drivers)
multiplexer, high-speed line, I-264
neon lamp, I-379
op amp power driver, IV-158-159
optoisolated, high-voltage, III-482
power driver, op amp, IV-158-159
pulsed infrared diode emitter, II-292
relay, I-264
relay, delay and controls closure time, II-530
relay, with strobe, I-266
RS-232C, low-power, III-175
shift register, I-418
solenoid, I-265, III-571-573
SSB, low distortion 1.6 to 30MH, II-538
stepping motor, II-376
totem-pole, with bootstrapping, III-175
two-phase motor, I-456

VCO driver, op-amp design, IV-362
drop-voltage recovery for long-line systems, IV-328
drum sound effect, II-591
dual-tone decoding, II-620
dual-tracking regulator, III-462
duplex line amplifier, III-616
duty-cycle detector, IV-144
duty-cycle meter, IV-275
duty-cycle monitor, III-329
duty-cycle multivibrator, 50-percent, III-584
duty-cycle oscillators
50-percent, III-426
variable, fixed-frequency, III-422
dwell meters
breaker point, I-102
digital, III-45

E

eavesdropper, telephone, wireless, III-620
echo effect, analog delay line, IV-21
edge detector, I-266, III-157
EEPROM pulse generator, 5V-powered, III-99
EKG simulator, three-chip, III-350
elapsed-time timer, II-680
electric-fence charger, II-202
electric-vehicle battery saver, III-67
electrolytic-capacitor reforming circuit, IV-276
electrometer, IV-277
electrometer amplifier, overload protected, II-155
electronic dice, IV-207
electronic locks, II-194-197, IV-161-163
combination, I-583, II-196
digital entry lock, IV-162
keyless design, IV-163
three-dial combination, II-195
electronic music, III-360
electronic roulette, II-276, IV-205
electronic ship siren, II-576
electronic switch, push on/off, II-359
electronic theremin, II-655
electronic thermometer, II-660
electronic wake-up call, II-324
electrostatic detector, III-337
emergency lantern/flasher, I-308
emergency light, I-378, IV-250
emissions analyzer, automotive exhaust, II-51
emulators, II-198-200
capacitance multiplier, II-200
JFET ac coupled integrator, II-200
resistor multiplier, II-199
simulated inductor, II-199
encoders
decoder and, III-14
telephone handset tone dial, I-634, III-613
tone, I-67, I-629
tone, two-wire, II-364
engine tachometer, I-94
enlarger timer, II-446, III-445
envelope detectors, III-155
AM signals, IV-142
low-level diodes, IV-141
envelope generator/modulator, musical, IV-22
EPROM, Vpp generator for, II-114
equalizers, I-671, IV-18
ten-band, graphic, active filter in, II-684
ten-band, octave, III-658
equipment-on reminder, I-121
exhaust emissions analyzer, II-51
expanded-scale meters
analog, III-774
dot or bar, II-186
expander circuits (*see* compressor/expander circuits)
extended-play circuit, tape-recorders, III-600
extractor, square-wave pulse, III-584

F

555 timer
astable, low duty cycle, II-267
beep transformer, III-566
integrator to multiply, II-669
RC audio oscillator from, II-567
square wave generator using, II-595
fader, audio fader, IV-17
fail-safe semiconductor alarm, III-6
fans
infrared heat-controlled fan, IV-226
speed controller, automatic, III-382
Fahrenheit thermometer, I-658
fault monitor, single-supply, III-495
fax/telephone switch, remote-controlled, IV-552-553
feedback oscillator, I-67
fence charger, II-201-203
battery-powered, II-202
electric, II-202
solid-state, II-203
FET circuits
dual-trace scope switch, II-432
input amplifier, II-7
probe, III-501
voltmeter, III-765, III-770
fiber optics, II-204-207, III-176-181
driver, LED, 50-Mb/s, III-178
interface for, II-207
link, I-268, I-269, I-270, III-179
motor control, dc, II-206
receiver, 10 MHz, II-205
receiver, 50-Mb/s, III-181
receiver, digital, III-178
receiver, high-sensitivity, 30nw, I-270
receiver, low-cost, 100-M baud rate, III-180
receiver, low-sensitivity, 300nW, I-271
receiver, very-high sensitivity, low speed, 3nW, I-269
repeater, I-270
speed control, II-206
transmitter, III-177
field disturbance sensor/alarm, II-507
field-strength meters, II-208-212, III-182-183, IV-164-166
1.5-150 MHz, I-275
adjustable sensitivity indicator, I-274
high-sensitivity, II-211
LF or HF, II-212
microwave, low-cost, I-273
rf sniffer, II-210
sensitive, I-274, III-183
signal-strength meter, IV-166
transmission indicator, II-211
tuned, I-276
UHF fields, IV-165
untuned, I-276
filter circuits, II-213-224, III-184-192, IV-167-177
active (*see* active filters)
antialiasing/sync-compensation, IV-173
audio, biquad, III-185
audio, tunable, IV-169
bandpass (*see* bandpass filters)
band-reject, active, II-401
biquad, I-292-293
biquad, audio, III-185
biquad, RC active bandpass, I-285
bridge filter, twin-T, programmable, II-221
Butterworth, high-pass, fourth-order, I-280
Chebyshev (*see* Chebyshev filters)
CW, razor-sharp, II-219
full wave rectifier and averaging, I-229
high-pass (*see* high-pass filters)
low-pass (*see* low-pass filters)
networks of, I-291
noise, dynamic, III-190
noisy signals, III-188
notch (*see* notch filters)
programmable, twin-T bridge, II-221
rejection, I-283
ripple suppressor, IV-175

filter circuits (*cont.*)
rumble, III-192, IV-175
rumble, LM387 in, I-297
rumble filter, turntable, IV-170
rumble/scratch, III-660
Sallen-Key, 500 Hz bandpass, I-291
Sallen-key, low-pass, active, IV-177
Sallen-Key, low-pass, equal component, I-292
Sallen-Key, low-pass, second order, I-289
scratch, III-189, IV-175
scratch, LM287 in, I-297
speech, bandpass, 300 Hz 3kHz, I-295
speech filter, second-order, 300-to-3,400 Hz, IV-174
speech filter, two-section, 300-to-3,000 Hz, IV-174
state-variable, II-215
state-variable, multiple outputs, III-190
state-variable, second-order, 1kHz, Q/10, I-293
state-variable, universal, I-290
turbo, glitch free, III-186
twin-T bridge filter, II-221
Wien-bridge, III-659
voltage-controlled, III-187
voltage-controlled, 1,000:1 tuning, IV-176
fixed power supplies, III-457-477, IV-390-408
12-VDC battery-operated 120-VAC, III-464
+24 V, 1.5 A supply from +12 V source, IV-401
15 V isolated to 2,500 V supply, IV-407
audio amplifier supply, ± 35 V ac, IV-398
audio amplifier supply, ±35 V, 5 A, mobile, IV-407
automotive battery supply, ±15 V and 5 V, IV-391
auxiliary supply, IV-394
bias/reference applications, auxiliary negative dc supply, IV-404
bilateral current source, III-469
bridge rectifier, IV-398
charge pool, III-469
charge pump, regulated, IV-396
constant-current source, safe, III-472
converter, III-470
converter, 5V-to-isolated 5V at 20MA, III-474
converter, ac-to-dc, IV-395
converter, dc-to-dc, 3-to-15 V, IV-400
current sink, 1 mA, IV-402
current source, bootstrapped amp, IV-406
current source, differential-input, fast-acting, IV-405
dc adapter/transceiver, hand-held, III-461
dual-tracking regulator, III-462
GASFET power supply, IV-405
general-purpose, III-465
inverter, 12 V input, IV-395
isolated feedback, III-460
LCD display power supply, IV-392, IV-403
linear regulator, low cost, low dropout, III-459
low-current source, IV-399
low-power inverter, III-466
negative rail, GET, with CMOS gates, IV-408
negative supply from +12 V source, IV-401
negative voltage from positive supply, IV-397
output stabilizer, IV-393
portable-radio 3 V power supply, IV-397
positive and negative voltage power supplies, IV-402
pnp regulator, zener increases voltage output, II-484
programmable, III-467
rectifier, bridge rectifier, IV-398
rectifier, low forward-drop, III-471
regulated 1 A, 12 V, IV-401
regulated +15V 1-A, III-462
regulated −15V 1-A, III-463
regulator, 15V slow turn-on, III-477
regulator, positive with PNP boost, III-471
regulator, positive, with NPN/PNP boost, III-475
regulator, switching, 3-A, III-472
regulator, switching, high-current inductorless, III-476
ripple suppressor, IV-396
RTTY machine current supply, IV-400
stabilizer, CMOS diode network, IV-406
switching, III-458
switching, 5- and ±12 V, ac-powered, IV-404
switching, 50-W off-line, III-473
switching, positive and negative voltage, IV-403
switching regulator, 3 A, IV-408
three-rail, III-466
uninterruptible +5V, III-477
voltage doubler, III-459
voltage doubler, triac-controlled, III-468
voltage regulator, 10V, high stability, III-468
voltage regulator, 5-V low-dropout, III-461
voltage regulator, ac, III-477
voltage regulator, negative, III-474
voltage-controlled current source/grounded source/load, III-468
fixed-frequency generator, III-231
flame ignitor, III-362
flame monitor, III-313
flash/flashbulb circuits (*see* photography-related circuits)
flashers and blinkers (*see also* photography-related circuits), I-304, II-225, III-193-210, IV-178-183
1.5 V, minimum power, I-308
1 kW flip-flop, II-234
1A lamp, I-306
2 kW, photoelectric control in, II-232
3V, I-306
ac, III-196
alternating, I-307, II-227
astable multivibrator, III-196
auto, I-299
automatic safety, I-302
automotive turn signal, sequential, I-109
bar display with alarm, I-252
barricade, I-299
boat, I-299
CMOS, III-199
dc, adjustable on/off timer, I-305
dual LED CMOS, I-302
electronic, II-228
emergency lantern, I-308
fast-action, I-306
flash light, 60-W, III-200
flicker light, IV-183
flip-flop, I-299
four-parallel LED, I-307
high efficiency parallel circuit, I-308
high-voltage, safe, I-307
high-power battery operated, II-229
incandescent bulb, III-198, I-306
LED, IV-181
LED, alternating, III-198, III-200
LED, control circuit, IV-183
LED, multivibrator design, IV-182
LED, PUT used in, II-239
LED, ring-around, III-194
LED flasher, sequential, reversible-direction, IV-182
LED, three-year, III-194
LED, UJT used in, II-231
low-current consumption, II-231

low-voltage, I-305, II-226
miniature transistorized, II-227
minimum-component, III-201
neon, I-303
neon, five-lamp, III-198
neon, two-state oscillator, III-200
neon, tube, I-304
oscillator and, high drive, II-235
oscillator and, low frequency, II-234
photographic slave-flash trigger, SCR design, IV-380, IV-382
photographic time-delay flash trigger, IV-380
relay driver, low-frequency lamp, I-300
SCR design, II-230, III-197
SCR chaser, III-197
SCR relaxation, II-230
SCR ring counter, III-195
sequential, II-233, IV-181
sequential, ac, II-238
sequencer, pseudorandom simulated, IV-179
single-lamp, III-196
strobe alarm, IV-180
telephone, II-629, IV-558, IV-559, IV-561
telephone-message flasher, IV-556
transistorized, III-200, I-303
transistorized, table of, II-236
variable, I-308
xenon light, IV-180
flashlight finder, I-300
flip-flops
astable, with starter, II-239
debouncer switch, IV-108
flasher circuit, 1 kW, use of, II-234
inverter, III-103
SCR, II-367
wave-shaping circuits, S/R, IV-651
flood alarm, I-390, III-206, IV-188
flow detectors, II-240-242, III-202-203
air, II-242
low-rate thermal, III-203
thermally based anemometer, II-241
flowmeter, liquid, II-248
fluid and moisture detectors, I-388, I-390, I-442, II-243-248, III-204-210, IV-184-191
acid rain monitor, II-245
checker, III-209
control, I-388, III-206
cryogenic fluid-level sensor, I-386
dual, III-207
flood alarm, III-206, IV-188
fluid-level control, III-205
full-bathtub indicator, IV-187
full-cup detector for the blind, IV-189
indicator, II-244
liquid flow meter, II-248
liquid-level checker, III-209
liquid-level monitor, III-210
liquid-level sensor, IV-186
liquid-level, dual, III-207
moisture detector, IV-188
monitor, III-210
plant water, II-245, II-248
pump controller, single-chip, II-247
rain alarm, IV-189
rain warning bleeper, II-244
sensor and control, II-246
soil moisture, III-208
temperature monitor, II-643, III-206
water-leak alarm, IV-190
water-level, III-206, IV-186, IV-191
water-level, indicator, II-244
water-level, sensing and control, II-246, IV-190
windshield-washer level, I-107
fluid-level controller, I-387, III-205
fluorescent display, vacuum, II-185
fluorescent lamps
high-voltage power supplies, cold-cathode design, IV-411
inverter, 8-W, III-306
flyback converters, I-211
self-oscillating, I-170, II-128, III-748
voltage, high-efficiency, III-744
flyback regulator, off-line, II-481
FM transmissions
5 V, I-233
12 V, I-233
clock radio, AM/FM, I-543
demodulators, I-544, II-161
IF amplifier with quadrature detector, TV sound IF, I-690
generators, low-frequency, III-228
radio, I-545
receivers, carrier-current circuit, III-80
receivers, MPX/SCA receiver, III-530
receivers, narrow-band, III-532
receivers optical receiver/transmitter, 50 kHz, I-361
receivers, zero center indicator, I-338
snooper, III-680
speakers, remote, carrier-current system, I-140
squelch circuit for AM, I-547
stereo demodulation system, I-544
transmitters, I-681
transmitters, infrared, voice-modulated pulse, IV-228
transmitters, multiplex, III-688
transmitters, one-transistor, III-687
transmitters, optical, 50 kHz center frequency, II-417
transmitters, optical receiver/transmitter, 50 kHz, I-361
transmitters, optical (PRM), I-367
transmitters, voice, III-678
tuner, I-231, III-529
wireless microphone, III-682, III-685, III-691
FM/AM clock radio, I-543
fog-light controller, automotive, IV-59
foldback current, HV regulator limiting, II-478
followers, III-211-212
inverting, high-frequency, III-212
noninverting, high-frequency, III-212
source, photodiode, III-419
unity gain, I-27
voltage, III-212
forward-current booster, III-17
free-running multivibrators
100 kHz, I-465
programmable-frequency, III-235
free-running oscillators, I-531
square wave, I-615
freezer, voltage, III-763
freezer-meltdown alarm, I-13
frequency comparators, II-109
LED, II-110
frequency control, telephone, II-623
frequency converter, I-159
frequency counters, III-340, III-768, IV-300
1.2 GHz, III-129
10-MHz, III-126
100 MHz, period and, II-136
low-cost, III-124
preamp, III-128
precision, I-253
tachometer and, I-310
frequency detectors, II-177, III-158
boundary detector, III-156
comparator, III-88
frequency dividers, I-258, II-251, II-254
clock input, IV-151
decade, I-259
low, II-253
programmable, IV-152-153
staircase generator and, I-730
frequency-division multiplex stereo decoder, II-169
frequency doublers, I-313
broadband, I-313
GASFET design, IV-324
frequency generators, fixed-frequency, III-231
frequency indicators, beat, I-336
frequency inverters, variable frequency, complementary output, III-297

frequency meters, II-249-250, IV-282
audio, I-311
linear, I-310
low cost, II-250
power, II-250
power-line, I-311
frequency multipliers/dividers, II-251, III-213-218
counter, odd-number, III-217
divide-by-1 1/2, III-216
doubler, III-215
doubler, digital, III-216
doubler, to 1MHz, II-252
doubler, single-chip, III-218
nonselective tripler, II-252
pulse-width, III-214
frequency-boundary detector, III-156
frequency-detecting comparator, III-88
frequency oscillator, tunable, II-425
frequency-ratio monitoring circuit, IV-202
frequency-shift key (FSK) communications
data receiver, III-533
decoder, 10.8 MHz, I-214
generator, low-cost design, III-227
keying circuits, IV-245
frequency synthesizer, programmable voltage controlled, II-265
frequency-to-voltage converter, I-318, II-255-257, III-219-220
dc, 10kHz, I-316
digital meter, I-317
optocoupler input, IV-193
sample-and-hold circuit, IV-194
single-supply design, IV-195
zener regulated, I-317
fuel gauge, automotive, IV-46
full-wave rectifiers, IV-328, IV-650
absolute value, II-528
precision, I-234, III-537
function generators (*see also* burst generators; sound generators; waveform generators), I-729, II-271, III-221-242, III-258-274, IV-196-202
555 astable, low duty cycle, II-267
astable multivibrator, II-269, III-233, III-238
astable multivibrator, op amp, III-224
astable multivibrator, programmable-frequency, III-237
audio function generator, IV-197
clock generator, I-193
clock generator/oscillator, I-615
complementary signals, XOR gate, III-226
DAC controlled, I-722
emitter-coupled RC oscillator, II-266
fixed-frequency, III-231
FM, low-frequency, III-228
free-running multivibrator, programmable-frequency, III-235
frequency-ratio monitoring circuit, IV-202
frequency synthesizer, programmable voltage controlled, II-265
FSK, low-cost, III-227
harmonics, III-228
linear ramp, II-270
linear triangle/square wave VCO, II-263
monostable operation, III-235
monostable multivibrator, III-230
monostable multivibrator, linear-ramp, III-237
monostable multivibrator, positive-triggered, III-229
monostable multivibrator, video amplifier and comparator, II-268
multiplying pulse width circuit, II-264
multivibrator, low-frequency, III-237
multivibrator, single-supply, III-232
nonlinear potentiometer outputs, IV-198
one-shot, precision, III-222
one-shot, retriggerable, III-238
oscillator/amplifier, wide frequency range, II-262
potentiometer-position V/F converter, IV-200
precise wave, II-274
programmed, I-724
pulse divider, noninteger, programmable, III-226
pulse train, IV-202
pulse, 2-ohm, III-231
quad op amp, four simultaneous synchronized waveform, II-259
ramp, variable reset level, II-267
sawtooth and pulse, III-241
signal, two-function, III-234
sine/cosine (0.1-10 kHz), II-260
single supply, II-273
sine-wave/square-wave oscillator, tunable, III-232
single-control, III-238
timebase, 1 Hz, for readout and counter applications, IV-201
time-delay generator, I-217-218
triangle-square wave, programmable, III-225
triangle-wave, III-234
triangle-wave timer, linear, III-222
triangle-wave/square-wave, III-239
triangle-wave/square-wave, precision, III-242
triangle-wave/square-wave, wide-range, III-242
tunable, wide-range, III-241
UJT monostable circuit insensitive to changing bias voltage, II-268
variable duty cycle timer output, III-240
voltage controlled high-speed one shot, II-266
waveform, II-269, II-272
waveform, four-output, III-223
white noise generator, IV-201
funk box, II-593
furnace exhaust gas/smoke detector, temp monitor/low supply detection, III-248
fuzz box, III-575
fuzz sound effect, II-590

G

GaAsFET amplifier, power, with single supply, II-10
gain block, video, III-712
gain control, automatic, audio, II-17
gain-controlled stereo amplifier, II-9, III-34
game feeder controller, II-360
game roller, I-326
games, II-275-277, III-243-245, IV-203-207
coin flipper, III-244
electronic dice, III-245, IV-207
electronic roulette, II-276, IV-205
lie detector, II-277, IV-206
reaction timer, IV-204
run-down clock/sound generator, IV-205
Wheel-of-Fortune, IV-206
who's first, III-244
garage stop light, II-53
gas analyzer, II-281
gas/smoke detectors (*see also* smoke alarms and detectors), II-278-279, III-246-253, III-246
analyzer and, II-281
furnace exhaust, temp monitor/low-supply detection, III-248
methane concentration, linearized output, III-250
toxic, II-280
SCR, III-251
smoke/gas/vapor detector, III-250
GASFET fixed power supplies, IV-405
gated oscillator, last-cycle completing, III-427
gated-pulse descrambler, II-165
gates
programmable, I-394
XOR gate, IV-107

geiger counters, I-536-537
high-voltage supply, II-489
pocket-sized, II-514
gel cell charger, II-66
generators, electric-power
corona-wind generator, IV-633
high-voltage generator, IV-413
high-voltage generator, battery-powered, III-482
high-voltage generator, capacitor-discharge, III-485
high-voltage generator, dc voltage, III-481
high-voltage generator, negative-ions, IV-634
high-voltage generator, ultra-high voltages, II-488
glitch-detector, comparator, II-107
glow plug driver, II-52
graphic equalizer, ten-band, active filter in, II-684
grid-dip meter, bandswitched, IV-298
ground tester, II-345
ground-fault Hall detector, IV-208-209
ground-noise probe, battery-powered, III-500
guitars
compressor, sound-effect circuit, IV-519
matching audio signal amplifiers, IV-38
treble boost for, II-683
tuner, II-362
gun, laser, visible red and continuous, III-310

H

half-duplex information transmission link, III-679
half-flash analog-to-digital converters, III-26
half-wave ac phase controlled circuit, I-377
half-wave rectifiers, I-230, III-528, IV-325
fast, I-228
Hall-effect circuits, II-282-284, III-254-258
angle of rotation detector, II-283
compass, III-258
current monitor, III-255, IV-284
door open alarm, II-284
ground-fault detector, IV-208-209
security door-ajar alarm, III-256
switches using, III-257, IV-539
halogen lamps, dimmer for, III-300
handitalkies, I-19
two-meter preamplifier for, I-19
hands-free telephone, III-605
hands-off intercom, III-291
handset encoder, telephone, III-613
harmonic generators, I-24, III-228, IV-649
Hartley oscillator, I-571
HC-based oscillators, III-423
HCU/HTC-based oscillator, III-426
headlight alarm, III-52
headlight delay unit, I-107, III-49
headlight dimmer, II-63
headphones, amplifier for, II-43
heart rate monitor, II-348, II-349
heat sniffer, electronic, III-627
heater, induction, ultrasonic, 120-KHz 500-W, III-704
heater controls, I-639
element controller, II-642
protector circuit, servo-sensed, III-624
temperature sensitive, I-640
hee-haw siren, II-578, III-565
hi-fi circuits
compander, II-12
compressor, pre-emphasis and, III-93
expander, II-13
expander, de-emphasis, III-95
tone control circuit, high Z input, I-676
high-frequency amplifiers, III-259-265
29-MHz, III-262
3-30 MHz, 80-W, 12.5-13.6 V, III-261
amateur radio, linear, 2-30 MHz 140-W, III-260
noninverting, 28-dB, III-263
RF, broadcast band, III-264
UHF, wideband with high-performance FETs, III-264
wideband, hybrid, 500 kHz-1GHz, III-265
wideband, miniature, III-265
high-frequency oscillator, III-426
crystal, I-175, II-148
high-frequency peak detector, II-175
high-frequency signal generator, II-150
high-input-high-impedance amplifiers, II-19, II-44
high-pass filters, I-296
active, I-296
active, second-order, I-297
Butterworth, fourth-order, I-280
Chebyshev, fourth-order, III-191
fourth-order, 100-Hz, IV-174
second-order, 100-Hz, IV-175
sixth-order elliptical, III-191
wideband two-pole, II-215
high-voltage power supplies (*see also* generators, electrical power), II-487-490, III-486, IV-409-413
10,000 V dc supply, IV-633
arc-jet power supply, starting circuit, III-479
battery-powered generator, III-482
bucking regulator, III-481
dc generator, III-481
fluorescent-lamp supply, cold-cathode design, IV-411
geiger counter supply, II-489
generators (*see* generators, electrical power)
inverter, III-484
inverter, 40 W, 120 V ac, IV-410-411
negative-ion generator, IV-634
optoisolated driver, III-482
preregulated, III-480
pulse supply, IV-412
regulator, III-485
regulator, foldback-current limiting, II-478
solid-state, remote adjustable, III-486
strobe power supply, IV-413
tube amplifier, high-volt isolation, IV-426
ultra high-voltage generator, II-488
hobby circuits (*see* model and hobby circuits)
hold button, telephone, 612, II-628
home security systems, IV-87
lights-on warning, IV-250
monitor, I-6
horn, auto, electronic, III-50
hot-wire anemometer, III-342
hour/time delay sampling circuit, II-668
Howland current pump, II-648
humidity sensor, II-285-287, III-266-267
HV regulator, foldback current limiting, II-478
hybrid power amplifier, III-455

I

IC product detectors, IV-143
IC timer, crystal-stabilized, subharmonic frequencies for, II-151
ice alarm, automotive, II-57
ice formation alarm, II-58
ice warning and lights reminder, I-106
ICOM IC-2A battery charger, II-65
IF amplifiers, I-690, IV-459
AGC system, IV-458
AGC system, CA3028-amplifiers, IV-458
preamp, IV-460
preamp, 30-MHz, IV-460
receiver, IV-459
two-stage, 60 MHz, I-563

ignition circuit, electronic, automotive, IV-65
ignition cut-off circuit, automotive, IV-53
ignition substitute, automotive, III-41
ignition system, capacitor discharger, I-103
ignition timing light, II-60
ignitor, III-362
illumination stabilizer, machine vision, II-306
image canceller, III-358
immobilizer, II-50
impedance converter, high to low, I-41
incandescent light flasher, III-198
indicators (*see also* alarms; control circuits; detectors; monitors; sensors), III-268-270, IV-210-218
  ac-current indicator, IV-290
  ac-power indicator, LED display, IV-214
  ac/dc indicator, IV-214
  alarm and, I-337
  automotive-temperature indicator, PTC thermistor, II-56
  balance indicator, IV-215
  bar-graph driver, transistorized, IV-213
  battery charge/discharge, I-122
  battery condition, I-121
  battery level, I-124
  battery threshold, I-124
  battery voltage, solid-state, I-120
  beat frequency, I-336
  CW offset indicator, IV-213
  dial pulse, III-613
  field-strength (*see* field-strength meters)
  in-use indicator, telephone, II-629
  infrared detector, low-noise, II-289
  lamp driver, optically coupled, III-413
  level, three-step, I-336
  low-battery, I-124
  low-voltage, III-769
  mains-failure indicator, IV-216
  On indicator, IV-217
  on-the-air, III-270
  overspeed, I-108
  overvoltage/undervoltage, I-150
  peak level, I-402
  phase sequence, I-476
  receiver-signal alarm, III-270
  rf output, IV-299
  rf-actuated relay, III-270
  simulated, I-417
  sound sensor, IV-218
  stereo-reception, III-269
  SWR warning, I-22
  telephone, in-use indicator, II-629, IV-560, IV-563
  telephone, off-hook, I-633
  temperature indicator, IV-570
  transmitter-output indicator, IV-218
  undervoltage, battery operated equipment, I-123
  visual modulation, I-430
  visual level, III-269
  voltage, III-758-772
  voltage, visible, I-338, III-772
  voltage-level, I-718, III-759
  voltage-level, five step, I-337
  voltage-level, ten-step, I-335
  volume indicator, audio amplifier, IV-212
  VU meter, LED display, IV-211
  zero center, FM receivers, I-338
in-use indicator, telephone, II-629
induction heater, ultrasonic, 120-KHz 500-W, III-704
inductors
  active, I-417
  simulated, II-199
infrared circuits, II-288-292, III-271-277, IV-219-228
  data link, I-341
  detector, III-276, IV-224
  detector, low-noise, II-289
  emitter drive, pulsed, II-292
  fan controller, IV-226
  laser rifle, invisible pulsed, II-291
  loudspeaker link, remote, I-343
  low-noise detector for, II-289
  object detector, long-range, III-273
  people-detector, IV-225
  proximity switch, infrared-activated, IV-345
  receivers, I-342, II-292, III-274, IV-220-221
  receivers, remote-control, I-342
  remote controller, IV-224
  remote-control tester, IV-228
  remote-extender, IV-227
  transmitter, I-343, II-289, II-290, III-274, III-276, III-277, IV-226-227
  transmitter, digital, III-275
  transmitter, remote-control, I-342
  transmitter, voice-modulated pulse FM, IV-228
  wireless speaker system, III-272
injectors
  three-in-one set: logic probe, signal tracer, injector, IV-429
injector-tracers, I-522
  single, II-500
  signal, I-521
input selectors, audio, low distortion, II-38
input/output buffer, analog multiplexers, III-11
instrumentation amplifiers, I-346, I-348, I-349, I-352, II-293-295, III-278-284, IV-229-234
  ±100 V common mode range, III-294
  current collector head amplifier, II-295
  differential, I-347, I-354, III-283
  differential, biomedical, III-282
  differential, high-gain, I-353
  differential, input, I-354
  differential, variable gain, I-349
  extended common-mode design, IV-234
  high-impedance low drift, I-355
  high-speed, I-354
  low-drift/low-noise dc amplifier, IV-232
  low-signal level/high-impedance, I-350
  low-power, III-284
  meter driver, II-296
  preamp, oscilloscope, IV-230-231
re-amp, thermocouple, III-283
  precision FET input, I-355
  saturated standard cell amplifier, II-296
  strain gauge, III-280
  triple op amp, I-347
  ultra-precision, III-279
  variable gain, differential input, I-349
  very high-impedance, I-354
  wideband, III-281
instrumentation meter driver, II-296
integrators, II-297-300, III-285-286
  active, inverting buffer, II-299
  JFET ac coupled, II-200
  gamma ray pulse, I-536
  long time, II-300
  low drift, I-423
  noninverting, improved, II-298
  photocurrent, II-326
  programmable reset level, III-286
  ramp generator, initial condition reset, III-527
  resettable, III-286
intercoms, I-415, II-301-303, III-287-292
  bidirectional, III-290
  carrier current, I-146
  hands-off, III-291
  party-line, II-303
  pocket pager, III-288
  telephone-intercoms, IV-557
  two-way, III-292
  two-wire design, IV-235-237
interfaces (*see also* computer circuits), IV-238-242
  680x, 650x, 8080 families, III-98

cassette-to-telephone, III-618
CPU interface, one-shot design, IV-239
DVM, temperature sensor and, II-647
FET driver, low-level power FET, IV-241
fiber optic, II-207
keyboard matrix interface, IV-240
logic-level translators, IV-242
optical sensor-to-TTL, III-314
process control, precision, I-30
tape recorder, II-614
interrupter, ground fault, I-580
interval timer, low-power, microprocessor programmable, II-678
inverters, III-293-298
dc-to-dc/ac, I-208
fast, I-422
fixed power supplies, 12 V input, IV-395
flip-flop, III-103
fluorescent lamp, 8-W, III-306
high-voltage, III-484
high-voltage power supplies, 40 W, 120 V ac, IV-410-411
low-power, fixed power supplies, III-466
on/off switch, III-594
picture, video circuits, III-722
power, III-298
power, 12 VDC-to-117 VAC at 60 Hz, III-294
power, medium, III-296
power, MOSFET, III-295
rectifier/inverter, programmable op-amp design, IV-364
ultrasonic, arc welding, 20 KHz, III-700
variable frequency, complementary output, III-297
voltage, precision, III-298
inverting amplifiers, I-41-42, III-14
balancing circuit in, I-33
low power, digitally selectable gain, II-333
power amplifier, I-79
programmable-gain, III-505
unity gain amplifier, I-80
wideband unity gain, I-35
inverting buffers, active integrator using, II-299
inverting comparators, hysteresis in, I-154
inverting followers, high-frequency, III-212
isolated feedback power supply, III-460
isolation amplifiers
capacitive load, I-34
level shifter, I-348
medical telemetry, I-352
rf, II-547
isolation and zero voltage switching logic, II-415
isolators
analog data-signal transmission, IV-133
digital transmission, II-414
stimulus, III-351

J

JFET ac coupled integrator, III-200

K

Kelvin thermometer, I-655
zero adjust, III-661
keying circuits, IV-243-245
automatic operation, II-15
automatic TTL morse code, I-25
CW keyer, IV-244
electronic, I-20
frequency-shift keyer, IV-245
negative key line keyer, IV-244

L

lamp-control circuits (*see* lights/light-activated and controlled circuits)
laser circuits (*see also* lights/light-activated and controlled circuits; optical circuits), II-313-317, III-309-311
diode sensor, IV-321
discharge current stabilizer, II-316
gun, visible red, III-310
light detector, II-314
power supply, IV-636
pulsers, laser diode, III-311, I-416
receiver, IV-368
rifle, invisible IR pulsed, II-291
latches
12-V, solenoid driver, III-572
comparator and, III-88
latching relays, dc, optically coupled, III-417
latching switches
double touchbutton, I-138
SCR-replacing, III-593
LCD display, fixed power supply, IV-392, IV-403
lead-acid batteries
battery chargers, III-55
life-extender and charger, IV-72
low-battery detector, III-56
leading-edge delay circuit, III-147
LED circuits
ac-power indicator, IV-214
alternating flasher, III-198, III-200
bar graph driver, II-188
driver, emitter/follower, IV-159
flasher, IV-181
flasher, control circuit, IV-183
flasher, multivibrator design, IV-182
flasher, PUT, II-239
flasher, sequential, reversible-direction, IV-182
flasher, UJT, II-231
frequency comparator, II-110
matrix display, two-variable, III-171
millivoltmeter readout, IV-294
multiplexed common-cathode display ADC, III-764
panel meter, III-347
peakmeter, III-333
ring-around flasher, III-194
RS-232C, computer circuit, III-103
three-year flasher, III-194
voltmeter, IV-286
VU meter, IV-211
level, electronic, II-666, IV-329
level controllers/indicators/monitors, II-174
alarm, water, I-389
audio, automatic, II-20
cryogenic fluid, I-386
fluid, I-387
hysteresis in, I-235
liquid, I-388, I-389, I-390
meter, LED bar/dot, I-251
peak, I-402
sound, I-403
three-step, I-336
visual, III-269
warning, audio output, low, I-391
warning, high-level, I-387
water, I-389
level shifter, negative-to-positive supply, I-394
LF or HF field strength meter, II-212
LF receiver, IV-451
lie detector, II-277, IV-206
lights/light-activated and controlled circuits (*see also* laser circuits; optical circuits), II-304-312, II-318-331, III-312-319
860 W limited-range light control, I-376
ambient-light cancellization circuit, II-328
audio oscillator, light-sensitive, III-315
battery-powered light, capacitance operated, I-131
brightness control, lighted displays, III-316
carport light, automatic, II-308

lights/light-activated and controlled circuits (*cont.*)
chaser lights, sequential activation, IV-251, IV-252
Christmas light driver, IV-254
complementary, I-372
controller, IV-252
cross fader, II-312
detectors, detection switch, adjustable, I-362
dimmer, I-369, II-309, IV-247, IV-249
dimmer, 800 W, II-309
dimmer, dc lamp, II-307
dimmer, four-quadrant, IV-248-249
dimmer, halogen lamps, III-300
dimmer, headlight, II-57, II-63
dimmer, low-cost, I-373
dimmer, soft-start, 800-W, I-376, III-304
dimmer, tandem, II-312
dimmer, triac, I-375, II-310, III-303
dissolver, solid-state, III-304
drivers, I-380
drivers, flip-flop independent design, IV-160
drivers, indicator-lamps, optical coupling, III-413
drivers, neon lamps, I-379
drivers, short-circuit-proof, II-310
emergency light, I-378, I-581, II-320, III-317, III-415, IV-250
flame monitor, III-313
fluorescent-lamp high-voltage power supplies, cold-cathode design, IV-411
indicator-lamp driver, optically coupled, III-413
interruption detector, I-364
inverter, fluorescent, 8-W, III-306
level controller, I-380
level detector, I-367, III-316
level detector, low-light level drop detector, III-313
life-extender for lightbulbs, III-302
light-bulb changer, "automatic" design, IV-253
lights-on warning, IV-58, IV-62, IV- 250
light-seeking robot, II-325
logic circuit, I-393
machine vision illumination stabilizer, II-306
marker light, III-317
meters, light-meters, I-382, I-383
modulator, III-302
monostable photocell, self-adjust trigger, II-329
mooring light, automatic, II-323
night light, automatic, I-360, III-306
night light, telephone-controlled, III-604
on/off relay, I-366
on/off reminder, automotive lights, I-109
on/off reminder, with ice alarm, I-106
one-shot timer, III-317
phase control, II-303, II-305
photo alarm, II-319
photocell, monostable, self-adjust trigger, II-329
photocurrent integrator, II-326
photodiode sensor amplifier, II-324
photoelectric controller, IV-369
photoelectric switches, II-321, II-326, III-319
projector-lamp voltage regulator, II-305
power outage light, line-operated, III-415
pulse-generation interruption, I-357
relay, on/off, I-366
remote-controller, I-370
robot, eyes, II-327
robot, light-seeking robot, II-325
sensor, ambient-light ignoring, III-413
sensor, back-biased GaAs LED, II-321
sensor, logarithmic, I-366
sensor, optical sensor-to-TTL interface, III-314
sequencer, pseudorandom, III-301
short-circuit proof lamp driver, II-310
signal conditioner, photodiode design, II-330
sound-controlled lights, I-609
speed controller, IV-247
strobe, high-voltage power supplies, IV-413
strobe, variable, III-589-590
sun tracker, III-318
switch, II-320, III-314
switch, capacitance switch, I-132
switch, light-controlled, II-320, III-314
switch, photoelectric, II-321, II-326, III-319
switch, solar triggered, III-318
switch, zero-point triac, II-311
tarry light, I-579
telephone in-use light, II-625
three-way light control, IV-251
touch lamp, three-way, IV-247
triac switch, inductive load, IV-253
turn-off circuit, SCR capacitor design, IV-254
twilight-triggered circuit, II-322
voltage regulator for projection lamp, II-305
wake-up call light, II-324
warning lights, II-320, III-317
light-seeking robot, II-325
lights-on warning, automotive, II-55, III-42
limit alarm, high/low, I-151
limit comparator, I-156, III-106
double ended, I-156, II-105
limit detectors
double ended, I-230, I-233
micropower double ended, I-155
limiters, III-320-322, IV-255-257
audio, low distortion, II-15
audio clipper/limiter, IV-355
dynamic noise reduction circuit, III-321
hold-current, solenoid driver, III-573
noise, III-321, II-395
one-zener design, IV-257
output, III-322
power-consumption, III-572
transmit-time limiter/timer, IV-580
voltage limiter, adjustable, IV-256
line amplifier
duplex, telephone, III-616
universal design, IV-39
line drivers
50-ohm transmission, II-192
600-ohm balanced, II-192
full rail excursions, II-190
high output 600-ohm, II-193
video amplifier, III-710
line-dropout detector, II-98
line-frequency square wave generator, II-599
line receivers
digital data, III-534
low-cost, III-532
line-sync, noise immune 60 Hz, II-367
line-current detector, optically coupled, III-414
line-current monitor, III-341
line-hum touch switch, III-664
line-synchronized driver circuit, III-174
line-voltage announcer, ac, III-730
line-voltage monitor, III-511
linear amplifiers
2-30MHz, 140W PEP amateur radio, I-555
100 W PEP 420-450 MHz push-pull, I-554
160 W PEP broadband, I-556
amateur radio, 2-30 MHz 140-W, III-260
CMOS inverter, II-11
rf amplifiers, 6-m, 100 W, IV-480-481
rf amplifiers, 903 MHz, IV-484-485
rf amplifiers, ATV, 10-to-15 W, IV-481

linear couplers
analog, II-413
analog ac, II-412
dc, II-411
linear IC siren, III-564
linear optocoupler, instrumentation, II-417
linear ramp generator, II-270
linear regulators
fixed power supply, low dropout low cost, III-459
radiation-hardened 125A, II-468
link, fiber optic, III-179
liquid flowmeter, II-248
liquid-level detectors (*see* fluid and moisture detectors)
lithium batteries
charger for, II-67
state of charge indicator for, II-78
little dipper dip meter, II-183
locator, lo-parts treasure, I-409
locks, electronic, II-194-197, IV-161-163
combination, I-583, II-196
digital entry lock, IV-162
keyless design, IV-163
three-dial combination, II-195
locomotive whistle, II-589
logarithmic amplifiers, I-29, I-35, II-8
dc to video, I-38
log-ratio amplifier, I-42
logarithmic converter, fast, I-169
logarithmic light sensor, I-366
logarithmic sweep VCO, III-738
logic/logic circuits
audible pulses, II-345
four-state, single LED indicator, II-361
isolation and zero voltage switching, II-415
light-activated, I-393
line monitor, III-108
overvoltage protection, I-517
probes (*see* logic probes)
pulse generator for logic-trouble-shooting, IV-436
pulser, III-520
signals, long delay line for, III-107
tester, audible, III-343
tester, TTL, I-527
translators, logic-level translators, IV-242
logic amplifiers, II-332-335
low power binary, to 10n gain low frequency, II-333
low power inverting, digitally selectable gain, II-333
low power noninverting, digitally selectable input and gain, II-334
precision, digitally programmable input and gain, II-335
programmable amplifier, II-334
logic converter, TTL to MOS, I-170
logic level shifter, negative-to-positive supply, I-394
logic probes, I-520, I-525, I-526, IV-430-431, IV-434
CMOS, I-523, I-526, III-499
digital, III-497
four-way operation, IV-432
memory-tester, installed, I-525
single-IC design, IV-433
three-in-one test set: probe, signal tracer, injector, IV-429
long-duration timer, PUT, II-675
long-range object detector, III-273
long-term electronic timer, II-672
long-time integrator, II-300
long-time timer, III-653
loop antenna, 3.5 MHz, IV-12-13
loop transmitter, remote sensors, III-70
loop-thru video amplifier, IV-616
loudness amplifier, II-46
loudness control, balance amplifier with, II-395
loudspeaker coupling circuit, I-78
low-current measurement system, III-345
low-distortion audio limiter, II-15
low-distortion input selector for audio use, II-38
low-distortion low level amplitude modulator, II-370
low-distortion sine wave oscillator, II-561
low-frequency oscillators, III-428
crystal, I-184, II-146
oscillator/flasher, II-234
Pierce oscillator, III-133
TTL oscillator, II-595
low-pass filters, I-287
active, digitally selected break frequency, II-216
Chebyshev, fifth-order, multi-feedback, II-219
pole-active, I-295
fast-response, fast settling, IV-168-169
fast-settling, precision, II-220
precision, fast settling, II-220
Sallen-Key, 10 kHz, I-279
Sallen-key, active, IV-177
Sallen-Key, equal component, I-292
low-voltage alarm/indicator, II-493, III-769
low-voltage power disconnector, II-97
LVDT circuits, II-336-339, III-323-324
driver-demodulator, II-337
signal conditioner, II-338

M

machine vision, illumination stabilizer for, II-306
magnetic current low-power sensor, III-341
magnetic phono preamplifier, I-91
magnetic pickup phone preamplifier, I-89
magnetometer, II-341
magnets, permanent-magnet detector, IV-281
mains-failure indicator, IV-216
marker generator, III-138
marker light, III-317
mathematical circuits, III-325-327, IV-258-263
adder, III-327
adder, binary, fast-action, IV-260-261
divide/multiply, one trim, III-326
multiplier, precise commutating amp, IV-262-263
slope integrator, programmable, IV-259
subtractor, III-327
measurement/test circuits (*see also* detectors; indicators; meters), II-340, III-328-348, IV-264-311
3-in-1 test set, III-330
absolute-value circuit, IV-274
acoustic-sound receiver, IV-311
acoustic-sound transmitter, IV-311
anemometer/, hot-wire, III-342
audible logic tester, III-343
automotive electrical tester, IV-45
B-field measurer, IV-272
barometer, IV-273
battery internal-resistance, IV-74
battery tester, IV-78
battery tester, ni-cad batteries, IV-79
breath alert alcohol tester, III-359
broadband ac active rectifier, IV-271
cable tester, III-539
capacitor tester, IV-265
capacitor-ESR measurer, IV-279
continuity tester, I-550, I-551, II-342, III-345, III-540, IV-287, IV-289, IV-296
continuity tester, latching, IV-295
crystal tester, II-151
current indicator, ac current, IV-290
current monitor, Hall-sensor, IV-284
current monitor/alarm, III-338
current sensor, high-gain, IV-291
deviation meter, IV-303
digital frequency meter, III-344

measurement/test circuits (*cont.*)
digital multimeter (DMM), high-resistance measuring, IV-291
diode, I-402, II-343
direction-of-rotation circuit, III-335
diode-curve tracer, IV-274
diode-matching circuit, IV-280
duty-cycle measurer, IV-265
duty-cycle meter, IV-275
duty-cycle monitor, III-329
E, T, and R measurement/test circuits, IV-283-296
electrolytic-capacitor reforming circuit, IV-276
electrometer, IV-277
electrostatic detector, III-337
filter analyzer, audio filters, IV-309
frequency checker, crystal oscillator, precision design, IV-301
frequency counter, III-340, IV-300
frequency meter, IV-282
frequency shift keyer tone generator, I-723
go/no-go, diode, I-401
go/no-go, dual-limit, I-157
grid-dip meter, bandswitched, IV-298
ground, I-580, II-345
injectors, IV-429
high-frequency and rf, IV-297-303
LC checker, III-334
LED panel meter, III-347
line-current monitor, III-341
logic probes (*see* logic probes)
logic-pulses, slow pulse test, II-345
low-current measurement, III-345
low-ohms adapter, IV-290
magnet, permanent-magnet detector, IV-281
magnetic current sensor, low-power, III-341
magnetic-field meter, IV-266
magnetometer, II-341
measuring gauge, linear variable differential transformer, I-404
meter tester, IV-270
microammeter, dc, four-range, IV-292
microfarad counter, IV-275
millivoltmeter, dc, IV-295
millivoltmeter, four-range, IV-289
millivoltmeter, LED readout, IV-294
modulation monitor, IV-299
mono audio-level meter, IV-310
motion sensor, unidirectional, II-346
motor hour, III-340
multiconductor-cable tester, IV-288
multimeter shunt, IV-293
noise generator, IV-308
ohmmeter, linear, III-540
ohmmeter, linear-scale, five-range, IV-290
oscilloscope adapter, four-trace, IV-267
paper sheet discriminator, copying machines, III-339
peak-dB meter, III-348
peakmeter, LED, III-333
phase difference from 0 to 180 degrees, II-344
phase meter, digital VOM, IV-277
picoammeter, III-338
power gain, 60 MHz, I-489
power supply test load, constant-current, IV-424
probes, 4-to-220 V, III-499
pulse-width, very short, III-336
QRP SWR bridge, III-336
remote-control infrared device, IV-228
resistance measurement, synchronous system, IV-285
resistance ratio detector, II-342
resistance/continuity meters, III-538-540
rf output indicator, IV-299
rf power, wide-range, III-332
SCR tester, III-344
shutter, I-485
signal generator, AM broadcast-band, IV-302
signal generator, AM/IF, 455 kHz, IV-301
signal strength (S), III-342
signal tracer, IV-429
sound-level meter, III-346, IV-305, IV-307
sound-test circuits (*see also* sound generators), IV-304
speedometer, bike, IV-271, IV-282
static detector, IV-276
stereo audio-level meter, IV-310
stereo audio-power meter, IV-306
stereo power meter, III-331
stud finder, III-339
SWR meter, IV-269
tachometer, III-335, III-340
tachometer, optical pick-up, III-347
tachometer, analog readout, IV-280
tachometer, digital readout, IV-278
tachometer, digital, IV-268-269
temperature measurement, transistorized, IV-572
test probe, 4-220 V, III-499
thermometers, III-637-643
three-in-one set, logic probe, signal tracer, injector, IV-429
three-phase tester, II-440
transistor, I-401, IV-281
TTL logic, I-527
universal test probe, IV-431
UHF source dipper, IV-299
voltmeter, digital LED readout, IV-286
VOM, phase meter, digital readout, IV-277
VOR signal simulator, IV-273
water-level measurement circuit, IV-191
wavemeter, tuned RF, IV-302
wideband test amplifier, IV-303
wire tracer, II-343
zener, I-400
medical electronic circuits, II-347-349, III-349-352
biomedical instrumentation differential amp, III-282
breath monitor, III-350
EKG simulator, three-chip, III-350
heart rate monitor, II-348, II-349
preamplifier for, II-349
stimulator, constant-current, III-352
stimulus isolator, III-351
thermometer, implantable/ingestible, III-641
melody generator, single-chip design, IV-520
memory-related circuits
EEPROM pulse generator, 5V-powered, III-99
memory protector/power supply monitor, IV-425
memory-saving power supply, II-486
metal detectors, II-350-352, IV-137
micropower, I-408
meters (*see also* measurement/test circuits)
ac voltmeters, III-765
analog, expanded-scale, IV-46
analog, expanded-scale, voltage reference, III-774
anemometer/, hot-wire, III-342
audio frequency, I-311
audio millivolt, III-767, III-769
audio power, I-488
automatic contrast, I-479
basic grid dip, I-247
breaker point dwell, I-102
capacitance, I-400
dc voltmeter, III-763
dc voltmeter, high-input resistance, III-762
deviation meter, IV-303
digital frequency, III-344
digital multimeter (DMM), high-resistance measuring, IV-291
dip, I-247
dip, dual-gate IGFET in, I-246

dosage rate, I-534
duty-cycle meter, IV-275
electrometer, IV-277
extended range VU, I-715, III-487
FET voltmeter, III-765, III-770
field-strength meters (*see* field-strength meters)
flash exposure, I-484, III-446
frequency meter, IV-282
grid-dip meter, bandswitched, IV-298
LED bar/dot level, I-251
LED panel, III-347
light, I-383
linear frequency, I-310
linear light, I-382
logarithmic light, I-382
magnetic-field meter, IV-266
meter-driver rf amplifier, 1-MHz, III-545
microammeter, dc, four-range, IV-292
microwave field strength, I-273
millivoltmeter, dc, IV-295
millivoltmeter, four-range, IV-289
millivoltmeter, LED readout, IV-294
mono audio-level meter, IV-310
motor hour, III-340
multimeter shunt, IV-293
ohmmeter, linear, III-540
ohmmeters, linear-scale, five-range, IV-290
peak decibels, III-348
peak, LED, III-333
pH, I-399
phase, I-406
picoammeter, III-338
power line frequency, I-311
power, I-489
resistance/continuity, III-538-540
rf power, I-16
rf power, wide-range, III-332
rf voltmeter, III-766
signal strength (S), III-342, IV-166
soil moisture, III-208
sound-level meter, IV-305, IV-307
sound level, telephone, III-614
sound level, III-346
speedometer, bicycle, IV-271, IV-282
stereo audio-level meter, IV-310
stereo audio-power meter, IV-306
stereo balance, I-618-619
stereo power, III-331
suppressed zero, I-716
SWR power, I-16, IV-269
tachometer, III-335, III-340, III-347
tachometer, analog readout, IV-280
tachometer, digital readout, IV-278
temperature, I-647
tester, IV-270
thermometers, III-637-643
tilt meter, III-644-646
varicap tuned FET DIP, I-246
vibration, I-404
voltage, III-758-77
voltmeters, ac wide-range, III-772
voltmeters, digital, 3.5-digit, full-scale four-decade, III-761
voltmeters, digital, 4.5-digit, III-760
voltmeters, high-input resistance, III-768
VOM field strength, I-276
VOM/phase meter, digital readout, IV-277
wavemeter, tuned RF, IV-302
methane concentration detector, linearized output, III-250
metronomes, I-413, II-353-355, III-353-354, IV-312-314
ac-line operated unijunction, II-355
accentuated beat, I-411
downbeat-emphasized, III-353-354
electronic, IV-313
low-power design, IV-313
novel design, IV-314
sight and sound, I-412
simple, II-354
version II, II-355
microammeter, dc, four-range, IV-292
microcontroller, musical organ, preprogrammed single-chip, I-600
micro-sized amplifiers, III-36
microphone circuits
amplifiers for, I-87, III-34
amplifiers for, electronic balanced input, I-86
FM wireless, III-682, III-685, III-691
mixer, II-37
preamp for, II-45, IV-37, IV-42
preamp, low-impedance design, IV-41
preamp for, low-noise transformerless balanced, I-88
preamp for, tone control in, I-675, II-687
wireless, IV-652-654
wireless AM, I-679
microprocessors (*see* computer circuits)
microvolt comparators
dual limit, III-89
hysteresis-including, III-88
microvolt probe, II-499
microwave amplifier circuits, IV-315-319
5.7 GHz, IV-317
bias supply for preamp, IV-318
preamplifier, 2.3 GHz, IV-316
preamplifier, 3.4 GHz, IV-316
preamplifier, single-stage, 10 GHz, IV-317
preamplifiers, bias supply, IV-318
preamplifiers, two-stage, 10 GHz, IV-319
Miller oscillator, I-193
millivoltmeters (*see also* meters; voltmeters)
ac, I-716
audio, III-767, III-769
high-input impedance, I-715
mini-stereo audio amplifiers, III-38
mixers, III-367-370, IV-330-336
1- MHz, I-427
audio, I-23, II-35, IV-335
audio, one-transistor design, I-59
CMOS, I-57
common-source, I-427
digital mixer, IV-334
diplexer, IV-335
doubly balanced, I-427
dynamic audio mixer, IV-331
four-channel, I-60, III-369, IV-333
four-channel, four-track, II-40
four-channel, high level, I-56
four-input, stereo, I-55
four-input, unity-gain, IV-334
HF transceiver/mixer, IV-457
hybrid, I-60
input-buffered, III-369
microphone, II-37
multiplexer, I-427
one-transistor design, I-59
passive, I-58
preamplifier with tone control, I-58
signal combiner, III-368
silent audio switching, I-59
sound amplifier and, II-37
stereo mixer, pan controls, IV-332
unity-gain, four-input, IV-334
utility-design mixer, IV-336
universal stage, III-370
video, high-performance operation, IV-609
mobile equipment, 8-amp regulated power supply, II-461
model and hobby circuits, IV-337-340
controller, model-train and/or slot-car, IV-338-340
model rocket launcher, II-358
modems, power-line, carrier-current circuit, III-82
modulated light beam circuit, ambient light effect cancellization with, II-328
modulated readback systems, disc/tape phase, I-89
modulation indicator/monitor, I-430
CB, I-431

modulators, I-437, II-368-372, III-371-377
+12V dc single supply, balanced, I-437
AM, I-438
amplitude, low-distortion low level, II-370
balanced, III-376
balanced, phase detector-selector/sync rectifier, III-441
double-sideband suppressed-carrier, III-377
linear pulse-width, I-437
monitor for, III-375
musical envelope generator, I-601
pulse-position, I-435, III-375
pulse-width, I-435, I-436, I-438-440, III-376, IV-326
rf, I-436, III-372, III-374
rf, double sideband, suppressed carrier, II-369
saw oscillator, III-373
TTL oscillator for television display, II-372
TV, I-439, II-433, II-434
VHF, I-440, III-684
video, I-437, II-371, II-372
moisture detector (*see* fluid and moisture detectors)
monitors (*see also* alarms; control circuits; detectors; indicators; sensors), III-378-390
acid rain, III-361
battery, III-60-67
battery-alternator, automotive, III-63
blinking phone light, II-624
breath monitor, III-350
current, alarm and, III-338
directional signals, auto, III-48
door-ajar, automotive circuits, III-46
duty cycle, III-329
flames, III-313
home security system, I-6
line-current, III-341
line-voltage, III-511
logic line, III-108
modulation, III-375
overvoltage, III-762
power monitor, SCR design, IV-385
power-supply monitors (*see* power-supply monitors)
power-line connections, ac, III-510
precision battery voltage, HTS, I-122
receiver, II-526
sound level, telephone, III-614
telephone status, optoisolator in, I-625
telephone, remote, II-626
thermal monitor, IV-569
undervoltage, III-762
voltage, III-767
voltage, III-758-772
monostable circuit, I-464, II-460
monostable multivibrators, I-465, III-230, III-235
input lockout, I-464
linear-ramp, III-237
positive-triggered, III-229
monostable photocell, self-adjust trigger, II-329
monostable TTL, I-464
monostable UJT, I-463
mooring light, automatic, II-323
MOSFETs
power control switch, IV-386
power inverter, III-295
mosquito repelling circuit, I-684
motion sensors
acoustic Doppler motion detector, IV-343
auto alarm, I-9
low-current-drain design, IV-342-343
motorcycle alarm, I-9
UHF, III-516, IV-344
unidirectional, II-346
motor control circuits, IV-347-353
400 Hz servo amplifier, II-386
ac motors, II-375
bidirectional proportional, II-374
compressor protector, IV-351
direction control, dc motors, I-452
direction control, series-wound motors, I-448
direction control, shunt-wound motors, I-456
direction control, stepper motor, IV-350
driver control, ac, three-phase, II-383
driver control, ac, two-phase, II-382
driver control, constant-speed, III-386
driver control, dc, fixed speed, III-387
driver control, dc, servo, bipolar control input, II-385
driver control, dc, speed-controlled reversible, III-388
driver control, N-phase motor, II-382
driver control, reversing, dc control signals, II-381
driver control, servo motor amplifier, I-452, II-384
driver control, stepper motors, III-390
driver control, stepper motor, half-step, IV-349
driver control, stepper motor, quarter-step, IV-350
driver control, two-phase, II-456
fiber-optic, dc, variable, II-206
hours-in-use meter, III-340
induction motor, I-454
load-dependent, universal motor, I-451
mini-drill control, IV-348
power brake, ac, II-451
power-factor controller, three-phase, II-388
PWM motor controller, III-389
PWM servo amplifier, III-379
PWM speed control, II-376
PWM speed control/energy-recovering brake, III-380
self-timing control, built-in, universal motor, I-451
servo motor amplifier, I-452, II-384
speed control (*see* speed controllers)
start-and-run motor circuit, III-382
stepper motors, half-step, IV-349
stepper motors, quarter-step, IV-350
stepper motors, speed and direction, IV-350
tachometer feedback control, II-378
tachometer feedback control, closed loop, II-390
motorcycle alarm, motion actuated, II-9
multiburst generator, square waveform, II-88
multimeters, shunt, IV-293
multiple-input detector, III-102
multiplexed common-cathode LED-display ADC, III-764
multiplexers, III-391-397
1-of-8 channel transmission system, III-395
analog, II-392
analog, 0/01-percent, II-392
analog, buffered input and output, III-396
analog, input/output buffer for, III-11
analog, single- to four-trace converter, II-431
capacitance, II-200, II-416
de-, III-394
four-channel, low-cost, III-394
frequency, III-213-218
mathematical, one trim, III-326
oscilloscopes, add-on, III-437
pulse-width, III-214
resistor, II-199
sample-and-hold, three-channel, III-396
two-level, III-392
video, 1-of-15 cascaded, III-393
wideband differential, II-428
multipliers, low-frequency multiplier, IV-325

multiplying D/A converter, III-168
multiplying pulse width circuit, II-264
multivibrators
  100 kHa free running, II-485
  astable, I-461, II-269, II-510, III-196, III-224, III-233, III-238
  astable, digital-control, II-462
  astable, dual, II-463
  astable, programmable-frequency, III-237
  bistable, II-465
  bistable, touch-triggered, I-133
  car battery, II-106
  CB modulation, II-431
  current, II-203
  duty-cycle, 50-percent, III-584
  free-running, programmable-frequency, III-235
  low-frequency, III-237
  low-voltage, II-123
  modulation, II-430
  monostable, II-465, III-229, III-230, III-235, III-237
  monostable, input lock-out, II-464
  one-shot, II-465
  oscilloscope, II-474
  single-supply, III-232
  sound level, II-403
  square-wave generators, IV-536
  telephone line, II-628
  wideband radiation, II-535
music circuits (*see* sound generators)
musical envelope generator/modulator, IV-22
mux/demux systems
  differential, I-425
  eight-channel, I-426, II-115

N

N-phase motor drive, III-382
NAB preamps
  record, III-673
  two-pole, III-673
NAB tape playback pre-amp, III-38
nano ammeter, I-202
narrow-band FM demodulator, carrier detect in, II-159
negative-ion generator, IV-634
neon flashers
  five-lamp, III-198
  two-state oscillator, III-200
networks
  filter, I-291
  speech, telephone, II-633
ni-cad batteries
  analyzer for, III-64
  charger, I-112, I-116, III-57
  charger, 12 v, 200 mA per hour, I-114
  charger, current and voltage limiting, I-114
  charger, fast-acting, I-118
  charger, portable, IV-69
  charger, temperature-sensing, IV-77
  charger, thermally controlled, II-68
  packs, automotive charger for, I-115
  protection circuit, III-62
  test circuit, IV-79
  zappers, I-6, II-68
night lights (*see* lights/light-activated and controlled circuits)
noise generators (*see* sound generators)
noise reduction circuits, II-393-396, III-398-401, IV-354-356
  audio clipper/limiter, IV-355
  audio shunt noise limiter, IV-355
  audio squelch, II-394
  balance amplifier with loudness control, II-395
  blanker, IV-356
  clipper, II-394
  clipper, audio-powered, III-396
  Dolby B, decode mode, III-401
  Dolby B, encode mode, III-400
  Dolby B/C, III-399
  dynamic noise reduction, III-321
  filter, III-188
  filter, dynamic filter, III-190
  limiter, II-395, III-321
noninverting amplifiers, I-41, III-14
  adjustable gain, I-91
  comparator with hysteresis in, I-153
  high-frequency, 28-dB, III-263
  hysteresis in, I-153
  low power, digitally selectable input and gain, II-334
  power, I-79
  programmable-gain, III-505
  single supply, I-74
  split supply, I-75
noninverting integrator, improved design, II-298
noninverting voltage followers, I-33
  high-frequency, III-212
nonselective frequency tripler, transistor saturation, II-252
Norton amplifier, absolute value, III-11
notch filters (*see also* filter circuits), I-283, II-397-403, III-402-404
  4.5 MHz, I-282
  550 Hx, II-399
  1800 Hz, II-398
  active band reject, II-401
  adjustable Q, II-398
  audio, II-400
  bandpass and, II-223
  high-Q, III-404
  selectable bandwidth, I-281
  three-amplifier design, I-281
  tunable, II-399, II-402
  tunable, passive-bridged differentiator, II-403
  tunable, hum-suppressing, I-280
  tunable, op amp, II-400
  twin-T, III-403
  Wien bridge, II-402
NTSC-to-RGB video decoder, IV-613
null circuit, variable gain, accurate, III-69
null detector, I-148, III-162

O

ohmmeters, I-549
  linear, III-540
  linear scale, I-549
  linear-scale, five-range, IV-290
ohms-to-volts converter, I-168
oil-pressure gauge, automotive, IV-44, IV-47
on/off inverter, III-594
on/off touch switches, II-691, III-663
one-of-eight channel transmission system, III-100
one-shot function generators, I-465
  digitally controlled, I-720
  precision, III-222
  retriggerable, III-238
one-shot timers, III-654
  light-controlled, III-317
  voltage-controlled high-speed, II-266
op amps, II-404-406, III-405-406, IV-357-364
  x10, I-37
  x100, I-37
  astable multivibrator, III-224
  audio amplifier, IV-33
  bidirectional compound op amp, IV-361
  clamping for, II-22
  clock circuit using, III-85
  comparator, three-input and gate comparator, IV-363
  compound op-amp, IV-364
  feedback-stabilized amplifier, IV-360
  gain-controlled op amp, IV-361
  intrinsically safe protected, III-12
  inverter/rectifier, programmable, IV-364
  on/off switch, transistorized, IV-546
  power booster, IV-358
  power driver circuit, IV-158-159
  quad, simultaneous waveform generator using, II-259
  single potentiometer to adjust gain over bipolar range, II-406
  swing rail-ray, LM324, IV-363

op amps (*cont.*)
tunable notch filter with, II-400
variable gain and sign, II-405
VCO driver, IV-362
video op amp circuits, IV-615
optical circuits (*see also* lasers; lights/light-activated and controlled circuits), II-407-419, IV-365-369
50 kHz center frequency FM transmitter, II-417
ac relay, III-418
ac relay using two photon couplers, II-412
ac switcher, high-voltage, III-408
ambient light ignoring optical sensor, III-413
CMOS coupler, III-414
communication system, II-416
dc linear coupler, II-411
dc latching relay, III-417
digital transmission isolator, II-414
high-sensitivity, NO, two-terminal zero voltage switch, II-414
indicator lamp driver, III-413
integrated solid state relay, II-408
interruption sensor, IV-366
isolation and zero voltage switching logic, II-415
light-detector, IV-369
line-current detector, III-414
linear ac analog coupler, II-412
linear analog coupler, II-413
linear optocoupler for instrumentation, II-417
microprocessor triac array driver, II-410
optoisolator relay circuit, IV-475
paper tape reader, II-414
photoelectric light controller, IV-369
power outage light, line-operated, III-415
probe, IV-369
receiver, 50 kHz FM optical transmitter, II-418
receiver, light receiver, IV-367
receiver, optical or laser light, IV-368
relays, dc solid-state, open/closed, III-412
source follower, photodiode, III-419
stable optocoupler, II-409
telephone ring detector, III-611
transmitter, light transmitter, IV-368
triggering SCR series, III-411
TTL coupler, optical, III-416
zero-voltage switching, closed half-wave, III-412
zero-voltage switching, solid-state, III-410
zero-voltage switching, solid-state relay, III-416
optical communication system, I-358, II-416
optical pyrometer, I-654
optical receiver, I-364, II-418
optical Schmitt trigger, I-362
optical sensor, ambient light ignoring, III-413
optical sensor-to-TTL interface, III-314
optical transmitters, I-363
FM (PRM), I-367
optocouplers
linear, instrumentation, II-417
stable, II-409
optoisolators, IV-475
driver, high-voltage, III-482
telephone status monitor using, I-626
OR gate, I-395
organ, musical, I-415
preprogrammed single chip microcontroller for, I-600
stylus, I-420
oscillators, II-420-429, III-420-432, IV-370-377
1 kHz, II-427
1.0 MHz, I-571
2MHz, II-571
5-V, III-432
50 kHz, I-727
400 MHz, I-571
500 MHz, I-570
800 Hz, I-68
adjustable over 10:1 range, II-423
astable, I-462
audio, I-245, III-427, IV-374, IV-375
audio, light-sensitive, III-315
beat-frequency audio generator, IV-371
buffer circuits, IV-89
Butler, aperiodic, I-196
Butler, common base, I-191
Butler, emitter follower, II-190-191, II-194
cassette bias, II-426
clock generator, I-615, III-85
CMOS, I-615
CMOS, 1 MHz to 4MHz, I-199
CMOS, crystal, I-187
code practice, I-15, I-20, I-22, II-428, III-431, IV-373, IV-375, IV-376
Colpitts, I-194, I-572, II-147
Colpitts, harmonic, I-189-190
crystal (*see* crystal oscillators)
double frequency output, I-314
discrete sequence, III-421
duty-cycle, 50-percent, III-426
emitter-coupled, big loop, II-422
emitter-coupled, RC, II-266
exponential digitally controlled, I-728
feedback, I-67
flasher and, high drive, II-235
flasher and, low frequency, II-234
free-running, I-531
free-running, square wave, I-615
frequency doubled output from, II-596
gated, I-728
gated, last-cycle completing, III-427
Hartley, I-571
hc-based, III-423
HCU/HCT-based, III-426
high-current, square-wave generator, III-585
high-frequency, III-426
high-frequency, crystal, I-175, II-148
load-switching, 100 mA, I-730
low-distortion, I-570
low-duty-cycle pulse circuit, IV-439
low-frequency, III-428
low-frequency, crystal, I-184, II-146
low-frequency, TTL, II-595
low-noise crystal, II-145
Miller, I-193
neon flasher, two-state, III-200
one-second, 1 kHz, II-423
one-shot, voltage-controlled high-speed, II-266
overtone, 50 MHz to 100 MHz, I-181
overtone, crystal, I-176, I-180, II-146, IV-123
overtone, crystal switching, I-183
overtone, fifth overtone, I-182
phase-locked, 20-MHz, IV-374
Pierce, I-195
Pierce, crystal, II-144
Pierce, harmonic, I-199, II-192
quadrature, III-428
quadrature-output, I-729
quadrature-output, square-wave generator, III-585
R/C, I-612
reflection, crystal-controlled, III-136
relaxation, IV-376
relaxation, SCR, III-430
resistance-controlled digital, II-426
rf (*see also* rf oscillator), II-550, I-572
rf-genie, II-421
rf-powered sidetone, I-24
RLC, III-423
sawtooth wave, modulator, III-373
Schmitt trigger crystal, I-181
sine-wave (*see* sine-wave oscillators)
sine-wave/square wave, easily tuned, I-65
sine-wave/square-wave, tunable, III-232
single op amp, I-529
square-wave, II-597, I-613-614, II-

616, IV-532, IV-533
square-wave, 0.5 Hz, I-616
square-wave, 1kHz, I-612
start-stop oscillator pulse circuit, IV-438
switching, 20 ns, I-729
temperature-compensated, low power 5v-driven, II-142
temperature-stable, II-427
temperature-compensated crystal, I-187
timer, 500 timer, I-531
tone-burst, decoder and, I-726
transmitter and, 27 MHz and 49 MHz rf, I-680
triangle/square wave, I-616, II-422
TTL, I-179, I-613
TTL, 1MHz to 10MHz, I-178
TTL, television display using, II-372
TTL-compatible crystal, I-197
tube type crystal, I-192
tunable frequency, II-425
tunable single comparator, I-69
varactor tuned 10 MHz ceramic resonator, II-141
variable, II-421
variable, audio, 20Hz to 20kHz, II-727
variable, four-decade, single control for, II-424
variable, wide range, II-429
variable-duty cycle, fixed-frequency, III-422
voltage-controlled (*see* voltage-controlled oscillators)
wide-frequency range, II-262
wide-range, I-69, III-425
wide-range, variable, I-730
Wien-bridge (*see* Wien-bridge oscillators)
XOR-gate, III-429
yelp, II-577
oscilloscopes, II-430-433, III-433-439
analog multiplexer, single- to four-trace scope converter, II-431
beam splitter, I-474
calibrator, II-433, III-436
converter, I-471
CRO doubler, III-439
eight-channel voltage display, III-435
extender, III-434
FET dual-trace switch for, II-432
four-trace oscilloscope adapter, IV-267
monitor, I-474
multiplexer, add-on, III-437
preamplifier, III-437
preamplifier, counter, III-438
preamplifier, instrumentation amplifiers, IV-230-231
sensitivity amplifier, III-436
triggered sweep, III-438
voltage-level dual readout, IV-108
outband descrambler, II-164
out-of-bounds pulse-width detector, III-158
output limiter, III-322
output-gating circuit, photomultiplier, II-516
output-stage booster, III-452
over/under temperature monitor, dual output, II-646
overload protector, speaker, II-16
overspeed indicator, I-108
overtone crystal oscillators, II-146
50 MHz to 100 MHz, I-181
100 MHz, IV-124
crystal, I-176, I-180, II-146
crystal switching, I-183
fifth overtone, I-182
third-overtone oscillator, IV-123
overvoltage detection and protection, IV-389
comparator to detect, II-107
monitor for, III-762
protection circuit, II-96, II-496, III-513
undervoltage and, indicator, I-150

P

pager, pocket-size, III-288
PAL/NTSC decoder, RGB input, III-717
palette, video, III-720
panning circuit, two-channel, I-57
paper-sheet discriminator, copying machines, III-339
paper-tape reader, II-414
parallel connections, telephone, III-611
party-line intercom, II-303
passive bridge, differentiator tunable notch filter, II-403
passive mixer, II-58
PCB continuity tester, II-342
peak decibel meter, III-348
peak detectors, II-174, II-175, II-434-436, IV-138, IV-143
analog, with digital hold, III-153
digital, III-160
high-bandwidth, III-161
high-frequency, II-175
high-speed, I-232
low-drift, III-156
negative, I-225, I-234
op amp, IV-145
positive, I-225, I-235, II-435, III-169
ultra-low drift, I-227
voltage, precision, I-226
wide-bandwidth, III-162
wide-range, III-152
peak meter, LED, III-333
peak program detector, III-771
peak-to-peak converter, precision ac/dc, II-127
people-detector, infrared-activated, IV-225
period counter, 100 MHz, frequency and, II-136
period-to-voltage converter, IV-115
pest-repeller, ultrasonic, III-699, III-706, III-707, IV-605-606
pH meter, I-399
pH probe, I-399, III-501
phase detectors, III-440-442
10-bit accuracy, II-176
phase selector/sync rectifier/balanced modulator, III-441
phase sequence, III-441
phase difference, 0- to 180-degree, II-344
phase indicator, II-439
phase meter, I-406
digital VOM, IV-277
phase selector, detector/sync rectifier/balanced modulator, III-441
phase sequence circuits, II-437-442
detector, II-439, II-441, II-442, III-441
indicator, I-476, II-439
rc circuit, phase sequence reversal detection, II-438
reversal, rc circuit to detect, II-438
three-phase tester, II-440
phase shifters, IV-647
0-180 degree,I-477
0-360 degree, I-477
single transistor, I-476
phase splitter, precision, III-582
phase tracking, three-phase square wave generator, II-598
phasor gun, I-606, IV-523
phono amplifiers, I-80-81
magnetic pickup, I-89
stereo, bass tone control, I-670
phono preamps, I-91
equalized, III-671
LM382, I-90
low-noise design, IV-36
magnetic, I-91, III-37
magnetic, ultra-low-noise, IV-36
photo-conductive detector amplifier, four quadrant, I-359
photo memory switch for ac power control, I-363
photo stop action, I-481
photocell, monostable, self-adjust trigger, II-329
photocurrent integrator, II-326
photodiode circuits
amplifier, III-672

photodiode circuits amplifier (*cont.*)
amplifier, low-noise, III-19
current-to-voltage converter, II-128
sensor amplifier, II-324
amplifier, I-361
comparator, precision, I-360
level detector, precision, I-365
PIN, thermally stabilized signal conditioner with, II-330
PIN-to-frequency converters, III-120
source follower, III-419
photoelectric circuits
ac power switch, III-319
alarm system, II-4
controlled flasher, II-232
light controller, IV-369
smoke alarm, line operated, I-596
smoke detector, I-595
switch, II-321
switch, synchronous, II-326
photoflash, electronic, III-449
photography-related circuits, II-443-449, III-443-449, IV-378-382
auto-advance projector, II-444
camera alarm trigger, III-444
camera trip circuit, IV-381
contrast meter, II-447
darkroom enlarger timer, III-445
electronic flash trigger, II-448
enlarger timer, II-446
exposure meter, I-484
flash meter, III-446
flash slave driver, I-483
flash trigger, electronic, II-448
flash trigger, remote, I-484
flash trigger, sound-triggered, II-449
flash trigger, xenon flash, III-447
photo-event timer, IV-379
photoflash, electronic, III-449
shutter speed tester, II-445
slave-flash unit trigger, SCR design, IV-380, IV-382
slide projector auto advance, IV-381
slide timer, III-448
slide-show timer, III-444
sound trigger for flash unit, II-449, IV-382
time-delay flash trigger, IV-380
timer, I-485
xenon flash trigger, slave, III-447
photomultiplier output-gating circuit, II- 516
picoammeters, I-202, II-154, III-338
circuit for, II-157
guarded input circuit, II-156
picture fixer/inverter, III-722
Pierce crystal oscillator, I-195, II-144
1-MHz, III-134
harmonic, I-199, II-192
low-frequency, III-133
piezoelectric alarm, I-12
piezoelectric fan-based temperature controller, III-627
PIN photodiode-to-frequency converters, III-120
pink noise generator, I-468
plant watering gauge, II-248
plant watering monitor, II-245
plant waterer, I-443
playback amplifier, tape, I-77
PLL/BC receiver, II-526
pocket pager, III-288
polarity converter, I-166
polarity-protection relay, IV-427
polarity-reversing amplifiers, low-power, III-16
portable-radio 3 V fixed power supplies, IV-397
position indicator/controller, tape recorder, II-615
positive input/negative output charge pump, III-360
positive peak detector, II-435
positive regulator, NPN/PNP boost, III-475
power amps, II-450-459, III-450-456
2- to 6-watt audio amplifier with preamp, II-451
10 W, I-76
12 W low distortion, I-76
25 W, II-452
90 W, safe area protection, II-459
am radio, I-77
audio, II-451, III-454, IV-28-33
audio, 20-W, III-456
audio, 50-W, III-451
audio, 6-W, with preamp, III-454
audio, booster, II-455
bridge audio, I-81
bull horn, II-453
class-D, III-453
hybrid, III-455
inverting, I-79
low-distortion, 12 W, I-76
low-power audio, II-454
noninverting, I-79
noninverting, ac, I-79
output-stage booster, III-452
portable, III-452
rear speaker ambience amplifier, II-458
rf, 1296-MHz solid state, III-542
rf, 5W, II-542
switching, I-33
two-meter 10 W, I-562
walkman amplifier, II-456
power booster, I-28, I-33
power control, burst, III-362
power disconnector, low-voltage, II-97
power factor controller, three-phase, II-388
power failure alarm, I-581-582
power gain test circuit, 60 MHz, I-489
power inverters, III-298
12 VDC-to-117 VAC at 60 Hz, III-294
medium, III-296
MOSFET, III-295
power loss detector, II-175
power meters, I-489
audio, I-488
frequency and, II-250
rf, I-16
SWR, I-16
power op amp/audio amp, high slew rate, I-82
power outage light, line-operated, III-415
power pack for battery operated devices, I-509
power protection circuit, I-515
power reference, 0-to-20 V, I-694
power supplies, II-460-486, III-464
5V including momentary backup, II-464
5V, 0.5A, I-491
8-amp regulated, mobile equipment operation, II-461
10 A regulator, current and thermal protection, II-474
12-14 V regulated 3A, II-480
90 V rms voltage regulator with PUT, II-479
500 kHz switching inverter for 12V, II-474
2,000 V low-current supply, IV-636-637
adjustable current limit and output voltage, I-505
arc lamp, 25W, II-476
arc-jet, starting circuit, III-479
backup supply, drop-in main-activated, IV-424
balance indicator, III-494
battery charger and, 14V, 4A, II-73
bench top, II-472
benchtop, dual output, I-505
bipolar, battery instruments, II-475
charge pool, III-469
dc-to-dc SMPS variable 18V to 30 V out at 0.2A, II-480
dual polarity, I-497
fault monitor, single-supply, III-495
fixed power supplies (*see* fixed power supplies)
general-purpose, III-465
glitches in, comparator to detect, II-107

high-voltage (*see* high-voltage power supplies)
increasing zener diode power rating, II-485
isolated feedback, III-460
laser power supply, voltage multiplier circuits, IV-636
low-ripple, I-500
low-volts alarm, II-493
memory save on power-down, II-486
micropower bandgap reference, II-470
microprocessor power supply watchdog, II-494
monitors (*see* power-supply monitors)
off-line flyback regulator, II-481
overvoltage protection circuit, II-496
overvoltages in, comparator to detect, II-107
power-switching circuit, II-466
programmable, III-467
protection circuit, II-497
protection circuit, fast acting, I-518
push-pull, 400V/60W, II-473
radiation-hardened 125A linear regulator, II-468
regulated, +15V 1-A, III-462
regulated, −15V 1-A, III-463
regulated, split, I-492
SCR preregulator for, II-482
single supply voltage regulator, II-471
split, I-512
stand-by, non-volatile CMOS RAMs, II-477
switching, II-470, III-458
switching, 50-W off-line, III-473
switching, variable, 100-KHz multiple-output, III-488
three-rail, III-466
uninterruptible, +5V, III-477
uninterruptible, personal computer, II-462
variable (*see* variable power supplies)
voltage regulator, II-484
power-consumption limiters, III-572
power-control circuits, IV-383-389
ac switch, battery-triggered, IV-387
bang-bang controllers, IV-389
current-loop control, SCR design, IV-387
high-side switches, 5 V supplies, IV-384, IV-385
monitor, SCR design, IV-385
MOSFET switch, IV-386
overvoltage protector, IV-389
power controller, universal design, IV-388
pushbutton switch, IV-388
power-down protection
alarm, III-511
memory save power supply for, II- 486
protection circuit, II-98
power-line connections monitor, ac, III-510
power-line modem, III-82
power-on reset, II-366
power-supply monitors, II-491-497, III-493-495, IV-422-427
backup supply, drop-in main-activated, IV-424
balance monitor, III-494
booster/buffer, boosts reference current, IV-425
circuit breaker, trip circuit, IV-423
fault monitor, single-supply, III-495
memory protector/supply monitor, IV-425
polarity-protection relay, IV-427
test load, constant-current, IV-424
triac for ac-voltage control, IV-426
tube amplifier, high-voltage isolation, IV-426
voltage sensor, IV-423
power-switching circuit, II-466
complementary ac, I-379
power/frequency meter, II-250
preamplifiers, I-41
6-meter, 20 dB gain and low NF, II-543
1000x, low-noise design, IV-37
audio amplifier, 2- to 6-watt, II-451
audio amplifier, 6-W and, III-454
equalized, for magnetic phono cartridges, III-671
frequency counter, III-128
general purpose, I-84
general-purpose design, audio signal amplifiers, IV-42
handitalkies, two-meter, I-19
IF, 30 MHz, IV-460
impedance-matching, IV-37
LM382 phono, I-91
low-noise, IV-41
low-noise 30MHz, I-561
low-noise transformerless balanced microphone, I-88
magnetic phono, I-91, III-673, IV-35
medical instrument, II-349
microphone, II-45, IV-37, IV-42
microphone, low-impedance, IV-41
microphone, tone control for, II-687
microphone, transformerless, unbalanced input, I-88
microwave, 2.3 GHz, IV-316
microwave, 3.4 GHz, IV-316
microwave, bias supply, IV-318
microwave, single-stage, 10 GHz, IV-317
microwave, two-stage, 10 GHz, IV-319
NAB, tape playback, professional, III-38
NAB, record, III-673
NAB, two-pole, III-673
oscilloscope, III-437
oscilloscope, instrumentation amplifiers, IV-230-231
oscilloscope/counter, III-438
phono,I-91
phono, low-noise, IV-36
phono, magnetic, ultra-low-noise, IV-36
phono, magnetic, III-37
read-head, automotive circuits, III-44
RIAA, III-38
RIAA/NAB compensation, I-92
stereo, II-43, II-45
tape, I-90
thermocouple instrumentation amplifier, III-283
tone control, I-675
tone control, high-level, II-688
tone control, IC, I-673, III-657
tone control, mixer, I-58
UHF-TV, III-546
ultra-low leakage, I-38, II-7
VHF, I-560
precision amplifier, I-40
digitally programmable input and gain, II-335
preregulators
high-voltage power supplies, III-480
tracking, III-492
prescaler, data circuits, low-frequency, IV-132
prescaler probe, amplifying, 650 MHz, II-502
preselectors
rf amplifiers, JFET, IV-485
rf amplifiers, JFET, double-tuned, IV-483
rf amplifiers, varactor-tuned, IV-488
printer-error alarm, computer circuits, IV-106
printers
printer-error alarm, IV-106
two-sheets in printer detector, IV-136
probes, II-498-504, III-496-503, IV-428-434
100 K megaohm dc, I-524
ac hot wire, I-581
audible TTL, I-524
audio-rf signal tracer, I-527
capacitance buffer, low-input, III-498
capacitance buffer, stabilized low-input, III-502

probes (*cont.*)
clamp-on-current compensator, II-501
CMOS logic, I-523
FET, III-501
general purpose rf detector, II-500
ground-noise, battery-powered, III-500
logic probes (*see* logic probes)
microvolt, II-499
optical light probe, IV-369
pH, I-399, III-501
prescaler, 650 MHz amplifying, II-502
rf, I-523, III-498, III-502, IV-433
single injector-tracer, II-500
test, 4-220V, III-499
three-in-one test set: logic probe, signal tracer, injector, IV-429
tone, digital IC testing, II-504
universal test probe, IV-431
process control interface, I-30
processor, CW signal, I-18
product detector, I-223
programmable amplifiers, II-334, III-504-508
differential-input, programmable gain, III-507
inverting, programmable-gain, III-505
noninverting, programmable-gain, III-505
precision, digital control, III-506
precision, digitally programmable, III-506
programmable-gain, selectable input, I-32
variable-gain, wide-range digital control, III-506
projectors (*see* photography-related circuits)
proportional temperature controller, III-626
protection circuits, II-95-99, III-509-513
12ns circuit breaker, II-97
automatic power down, II-98
circuit breaker, ac, III-512
circuit breaker, electronic, high-speed, II-96
compressor protector, IV-351
crowbars, electronic, II-99, III-510
heater protector, servo-sensed, III-624
line protectors, computer I/O, 3 uP, IV-101
line dropout detector, II-98
line-voltage monitor, III-511
low-voltage power disconnector, II-97
overvoltage, II-96, IV-389
overvoltage, fast, III-513
overvoltage, logic, I-517
polarity-protection relay for power supplies, IV-427
power-down, II-98
power-failure alarm, III-511
power-line connections monitor, ac, III-510
power supply, II-497, I-518
reset-protection for computers, IV-100
proximity sensors, I-135-136, I-344, II-505-507, III-514-518, IV-341-346
alarm for, II-506
capacitive, III-515
field disturbance sensor/alarm, II-507
infrared-reflection switch, IV-345
relay-output, IV-345
SCR alarm, III-517
self-biased, changing field, I-135
switch, III-517
UHF movement detector, III-516
pseudorandom sequencer, III-301
pulse circuits, IV-435-440
amplitude discriminator, III-356
coincidence detector, II-178
counter, ring counter, low-power, IV-437
delay, dual-edge trigger, III-147
detector, missing-pulse, III-159
divider, non-integer programmable, III-226, II-511
extractor, square-wave, III-584
generator, 555-circuit, IV-439
generator, delayed-pulse generator, IV-440
generator, free-running, IV-438
generator, logic troubleshooting applications, IV-436
generator, transistorized design, IV-437
height-to-width converters, III-119
oscillator, fast, low duty-cycle, IV-439
oscillator, start-stop, stable design, IV-438
pulse train-to-sinusoid converters, III-122
sequence detector, II-172
stretcher, IV-440
stretcher, negative pulse stretcher, IV-436
stretcher, positive pulse stretcher, IV-438
pulse generators, II-508-511
2-ohm, III-231
300-V, III-521
astable multivibrator, II-510
clock, 60Hz, II-102
CMOS short-pulse, III-523
delayed, II-509
EEPROM, 5V-powered, III-99
interrupting pulse-generation, I-357
logic, III-520
programmable, I-529
sawtooth-wave generator and, III-241
single, II-175
two-phase pulse, I-532
unijunction transistor design, I-530
very low duty-cycle, III-521
voltage-controller and, III-524
wide-ranging, III-522
pulse supply, high-voltage power supplies, IV-412
pulse-dialing telephone, III-610
pulse-position modulator, III-375
pulse-width-to-voltage converters, III-117
pulse-width modulators (PWM), IV-326
brightness controller, III-307
control, microprocessor selected, II-116
modulator, III-376
motor speed control, II-376, III-389
multiplier circuit, II-264, III-214
out-of-bounds detector, III-158
proportional-controller circuit, II-21
servo amplifier, III-379
speed control/energy-recovering brake, III-380
very short, measurement circuit, III-336
pulse/tone dialer, single-chip, III-603
pulsers, laser diode, III-311
pump circuits
controller, single chip, II-247
positive input/negative output charge, I-418
push switch, on/off, electronic, II-359
push-pull power supply, 400V/60W, II-473
pushbutton power control switch, IV-388
PUT battery chargers, III-54
PUT long-duration timer, II-675
pyrometer, optical, I-654

Q

Q-multipliers
audio, II-20
transistorized, I-566
QRP CW transmitter, III-690
QRP SWR bridge, III-336
quad op amp, simultaneous waveform generator using, II-259
quadrature oscillators, III-428
square-wave generator, III-585
quartz crystal oscillator, two-gate, III-136

quick-deactivating battery sensor, III-61

R

race-car motor/crash sound generator, III-578
radar detectors, II-518-520, IV-441-442
  one-chip, II-519
radiation detectors, II-512-517
  alarm, II-4
  micropower, II-513
  monitor, wideband, I-535
  photomultiplier output-gating circuit, II-516
  pocket-sized Geiger counter, II-514
radiation-hardened 125A linear regulator, II-468
radio
  AM car-radio to short-wave radio converter, IV-500
  AM demodulator, II-160
  AM radio, power amplifier, I-77
  AM radio, receivers, III-81, III-529, III-535
  AM/FM, clock radio, I-543
  AM/FM, squelch circuit, II-547, III-1
  amateur radio, III-260, III-534, III-675
  automotive, receiver for, II-525
  clock, I-542
  direction finder, radio signals, IV-148-149
  FM (*see* FM transmissions)
  portable-radio 3 V fixed power supplies, IV-397
  radio beacon converter, IV-495
  receiver, AM radio, IV-455
  receiver, old-time design, IV-453
  receiver, reflex radio receiver, IV-452
  receiver, short-wave receiver, IV-454
  receiver, TRF radio receiver, IV-452
radio beacon converter, IV-495
radio-control circuits
  audio oscillator, II-567, III-555
  motor speed controller, I-576
  phase sequence reversal by, II-438
  oscillator, emitter-coupled, II-266
  receiver/decoder, I-574
  single-SCR design, II-361
radioactivity (*see* radiation detectors)
rain warning beeper, II-244, IV-189
RAM, non-volatile CMOS, stand-by power supply, II-477
ramp generators, I-540, II-521-523, III-525-527, IV-443-447
  accurate, III-526
  integrator, initial condition reset, III-527
  linear, II-270
  variable reset level, II-267
  voltage-controlled, II-523
ranging system, ultrasonic, III-697
reaction timer, IV-204
read-head pre-amplifier, automotive circuits, III-44
readback system, disc/tape phase modulated, I-89
readout, rf current, I-22
receiver audio circuit, IV-31
receivers and receiving circuits (*see also* transceivers; transmitters), II-524-526, III-528-535, IV-448-461
  50kHz FM optical transmitter, I-361
  acoustic-sound receiver, IV-311
  AGC system for CA3028 IF amplifier, IV-458
  AM, III-529, IV-455
  AM, carrier-current circuit, III-81
  AM, integrated, III-535
  analog, I-545
  ATV rf receiver/converter, 420 MHz, low-noise, IV-496, IV-497
  car radio, capacitive diode tuning/electronic MW/LW switching, II-525
  carrier current, I-143, I-146
  carrier current, single transistor, I-145
  carrier system, I-141
  carrier-operated relay (COR), IV-461
  CMOS line, I-546
  data receiver/message demuxer, three-wire design, IV-130
  fiber optic, 10 MHz, II-205
  fiber optic, 50-Mb/s, III-181
  fiber optic, digital, III-178
  fiber optic, high-sensitivity, 30nW, I-270
  fiber optic, low-cost, 100-M baud rate, III-180
  fiber optic, low-sensitivity, 300nW, I-271
  fiber optic, very high-sensitivity, low speed 3nW, I-269
  FM, carrier-current circuit, III-80
  FM, MPX/SCA, III-530
  FM, narrow-band, III-532
  FM, tuner, III-529
  FM, zero center indicator, I-338
  FSK data, III-533
  ham-band, III-534
  IF amplifier, IV-459
  IF amplifier, preamp, 30 MHz, IV-460
  IF amplifier/receiver, IV-459
  infrared, I-342, II-292, III-274, IV-220-221
  laser, IV-368
  LF receiver, IV-451
  line-type, digital data, III-534
  line-type, low-cost, III-532
  monitor for, II-526
  optical, I-364, II-418
  optical light receiver, IV-367, IV-368
  PLL/BC, II-526
  pulse-frequency modulated, IV-453
  radio control, decoder and, I-574
  radio receiver, AM, IV-455
  radio receiver, old-time design, IV-453
  radio receiver, reflex, IV-452
  radio receiver, TRF, IV-452
  regenerative receiver, one-transistor design, IV-449
  RS-232 to CMOS, III-102
  short-wave receiver, IV-454
  signal-reception alarm, III-270
  superheterodyne receiver, 3.5-to-10 MHz, IV-450-451
  tracer, III-357
  transceiver/mixer, HF, IV-457
  ultrasonic, III-698, III-705
  zero center indicator for FM, I-338
recording amplifier, I-90
recording devices (*see* tape-recorder circuits)
rectangular-to-triangular waveform converter, IV-116-117
rectifiers, II-527-528, III-536-537
  absolute value, ideal full wave, II-528
  averaging filter, I-229
  bridge rectifier, fixed power supplies, IV-398
  broadband ac active, IV-271
  diodeless, precision, III-537
  full-wave, I-234, III-537, IV-328, IV-650
  half-wave, I-230, II-528, IV-325
  half-wave, fast, I-228
  high-impedance precision, for ac/dc converter, I-164
  inverter/rectifier, programmable op-amp design, IV-364
  low forward-drop, III-471
  precision, I-422
  synchronous, phase detector-selector/balanced modulator, III-441
redial, electronic telephone set with, III-606
reference voltages, I-695, III-773-775
  ± 10V, I-696
  ±3V, I-696
  ±5V, I-696
  0- to 20 V power, I-694, I-699
  amplifier, I-36
  bipolar output, precision, I-698

reference voltages (*cont.*)
dual tracking voltage, precision, I-698
high-stability, I-696
low-noise buffered, precision, I-698
low-power regulator, I-695
micropower 10 V, precision, I-697
square wave voltage, precision, I-696
standard cell replacement, precision, I-699
variable-voltage reference source, IV-327
reference clock, three phase clock from, II-101
reference supply, low-voltage adjustable, I-695
reflection oscillator, crystal-controlled, III-136
reflectometer, I-16
regenerative receiver, one-transistor design, IV-449
registers, shift, I-380, II-366
driver, I-418
regulated power supplies
8-amp, II-461
12 to 14V at 3 A, II-480
+15V 1-A, III-462
−15V 1-A, III-463
split power supplies, I-492
regulators (*see* voltage regulators)
rejection filter, I-283
relaxation oscillator, III-430, IV-376
relays, II-529-532, IV-471-475
ac, optically coupled, III-418
ac, photon coupler in, II-412
ac, solid-state latching, IV-472
audio operated, I-608
bidirectional switch, IV-472
capacitance, I-130
carrier operated, I-575
carrier-operated relay (COR), IV-461
dc latching, optically coupled, III-417
delay-off circuit, IV-473
driver, delay and controls closure time, II-530
light-beam operated on/off, I-366
monostable relay, low-consumption design, IV-473
optically coupled, ac, III-418
optically coupled, dc latching, III-417
optoisolator, IV-475
polarity-protection for power supplies, IV-427
rf-actuated, III-270
ringer, telephone, III-606
solid-state, III-569-570, IV-474
solid-state, 10 A 25 Vdc, I-623
solid-state, ac, III-570
solid-state, ac, latching, IV-472
solid-state, dc, normally open/closed, III-412
solid-state, integrated, II-408
solid-state, light-isolated, I-365
solid-state, ZVS, antiparallel SCR output, III-416
sound actuated, I-576, I-610
telephone, I-631
time delayed, I-663
time delayed, ultra-precise, I-219
tone actuated, I-576
TR circuit, II-532
triac, contact protection, II-531
remote control devices
amplifier, I-99
carrier, current, I-146
drop-voltage recovery for long-line systems, IV-328
extender, infrared, IV-227
fax/telephone switch, IV-552-553
infrared circuit, IV-224
lamp or appliance, I-370
loudspeaker via IR link, I-343
on/off switch, I-577
ringer, telephone, III-614
sensor, temperature transducer, I-649
servo system, I-575
telephone monitor, II-626
temperature sensor, II-654
tester, infrared, IV-228
thermometer, II-659
transmitter/receiver, IR, I-342
video switch, IV-619-621
repeaters
European-type, tone burst generator for, III-74
fiber optic link, I-270
telephone, III-607
repeater beeper, I-19
reset buttons
child-proof computer reset, IV-107
power-on, II-366
protection circuit for computer, IV-100
resistance/continuity meters, II-533, III-538-540
cable tester, III-539
continuity tester, III-540
ohmmeter, linear, III-540
resistance-ratio detector, II-342
single chip checker, II-534
resistance measurement, low parts count ratiometric, I-550
resistance-to-voltage converter, I-161-162
resistor multiplier, II-199
resonator oscillator, varactor tuned 10 MHz ceramic, II-141
restorer, video dc, III-723
reverb effect, analog delay line, IV-21
reverb system, stereo, I-602, I-606
reversing motor drive, dc control signal, II-381
rf amplifiers, II-537-549, III-542-547, IV-476-493
1 W, 2.3 GHz, II-540
10 W, 225-400 MHz, II-548
10 dB-gain, III-543
2- to 30 MHz, III-544
4 W amp for 900 MHz, IV-477
5 W 150-MHz, III-546
5 W power, II-542
6-meter kilowatt, II-545
6-meter preamp, 20dB gain and low NF, II-543
60 W 225-400 MHz, III-547
125 W, 150 MHz, II-544
500 MHz, IV-491
1,296 MHz, IV-486
1,500 W, IV-478-479
AGC, wideband adjustable, III-545
broadcast-band, III-264, II-546
broadcast-band booster, IV-487
buffer amplifier with modulator, IV-490
cascode amplifier, IV-488
common-gate, 450-MHz, III-544
isolation amplifier, II-547
linear amplifier, 903 MHz, IV-484-485
linear amplifier, 6-m, 100 W, IV-480-481
linear amplifier, ATV, 10-to-15 W, IV-481
low distortion 1.6 to 30MHz SSB driver, II-538
meter-driver, 1-MHz, III-545
MOSFET rf-amp stage, dual-gate, IV-489
power, 600 W, I-559
power amp, 1296-MHz solid-state, III-542
preselector, JFET, IV-485
preselector, JFET, double-tuned, IV-483
preselector, varactor-tuned, IV-488
UHF-TV preamp, III-546
UHF TV-line amplifier, IV-482, IV-483
wideband amplifier, IV-479, IV-489, IV-490
wideband amplifier, HF, IV-492
wideband amplifier, JFET, IV-493
wideband amplifier, MOSFET, IV-492
wideband amplifier, two-CA3100 op

amp design, IV-491
rf circuits
attenuator, IV-322
burst generators, portable, III-73
converters, IV-494-501
converters, ATV receiver/converter, 420 MHz, low-noise, IV-496, IV-497
converters, radio beacon converter, IV-495
converters, receiver frequency-converter stage, IV-499
converters, SW converter for AM car radio, IV-500
converters, two-meter, IV-498
converters, up-converter, TVRO subcarrier reception, IV-501
converters, VLF converter, IV-497
converters, WWV-to-SW converter, IV-499
converters,receiving converter, 220 MHz, IV-500
current readout, I-22
detector, II-500
detector probe, IV-433
genie, II-421
measurement/test circuits, IV-297-303
modulators, I-436, III-372, III-374
modulators, double sideband suppressed carrier, II-369
oscillators, I-550-551, I-572
oscillators, 5 MHz VFO, II-551
oscillators, transmitter and, 27MHz and 49MHz, I-680
output indicator, IV-299
power meter, I-16
power meter, sidetone oscillator, I-24
power meter, switch, III-592
power meter, wide-range, III-332
probe, I-523, III-498, III-502
signal tracer probe, audio, I-527
sniffer, II-210
switch, low-cost, III-361
VHF/UHF diode switch, IV-544
voltmeter, I-405, III-766
RGB video amplifier, III-709
RGB-composite video signal converter, III-714
RGB-to-NTSC converter, IV-611
ring counters
20 kHz, II-135
incandescent lamps, I-301
low cost, I-301
pulse circuit, low-power, IV-437
SCR, III-195
variable timing, II-134
ring detectors
low line loading, I-634
telephone, II-623, III-619
telephone, auto-answer, I-635
telephone, optically interfaced, III-611
ring-around flasher, LED, III-194
ringers, telephone, I-628, IV-556
extension-phone ringer, IV-561
high isolation, II-625
multi-tone, remote programmable, II-634
musical, II-619
piezoelectric, I-636
plug-in, remote, II-627
relay, III-606
remote, II-627, III-614, IV-562
silencer, IV-557
tone, I-627, I-628, II-630, II-631
ripple suppressor, IV-175
fixed power supplies, IV-396
RLC oscillator, III-423
rms-to-dc converter, I-167, II-129
thermal, 50-MHz, III-117
road ice alarm, II-57
robots
eyes for, II-327
light-seeking, II-325
rocket launcher, II-358
rotation detector, II-283
roulette, electronic, II-276, IV-205
RS-232 interface
CMOS-to, line receiver, III-102
dataselector, automatic, III-97
drive circuit, low-power, III-175
LED circuit, III-103
line-driven CMOS circuits, IV-104
RS flip-flop, I-395
RTD signal conditioners
5V powered linearized platinum, II-650
precision, linearized platinum, II-639
RTTY machines, fixed current supply, IV-400
rumble filters, I-297, III-192, III-660, IV-170, IV-175

S

S meter, III-342
safe area protection, power amplifier with, III-459
safety flare, II-608
Sallen-Key filters
500 Hz bandpass, I-291
low-pass, active, IV-177
low-pass, equal component, I-292
low-pass, second order, I-289
sample-and-hold circuits, I-590, II-552-559, III-548-553, IV-502-503
x 1000, I-589
charge-compensated, II-559
fast and precise, II-556
filtered, III-550
frequency-to-voltage conversion, IV-194
high-accuracy, I-590
high-performance, II-557
high-speed amplifier, I-587
high-speed, I-587-588, I-590, III-550
infinite, II-558
inverting, III-552
JFET, I-586
low-drift, I-586
offset adjustment for, I-588
three-channel multiplexer with, III-396
track-and-hold, III-552
track-and-hold, basic, III-549
sampling circuit, hour time delay, II-668
saturated standard cell amplifier, II-296
sawtooth waves
converter, IV-114
generator, digital design, IV-444, IV-446
oscillator modulator, III-373
pulse generator and, III-241
SCA decoder, I-214, II-166, II-170
SCA demodulator, II-150, III-565
scale, digital weight, I-398
scaler, inverse, I-422
scanner, bar codes, III-363
Schmitt triggers, I-593, III-153
crystal oscillator, I-181
programmable hysteresis, I-592
TTL-compatible, II-111
without hysteresis, I-592
SCR circuits
annunciator, self-interrupting load, IV-9
chaser, III-197
crowbar, II-496
flasher, III-197
flip-flop, II-367
gas/smoke detector, III-251
preregulator, II-482
proximity alarm, III-517
radio control using, II-361
relaxation flasher, II-230
relaxation oscillator, III-430
ring counter, III-195
tester, III-344
time delay circuit with, II-670
triggering series, optically coupled, III-411
scramblers, audio (*see also* sound generators; voice-activated circuits), IV-25-27

scramblers, audio (*cont.*)
telephone, II-618
voice scrambler/descrambler, IV-26
voice scrambler/disguiser, IV-27
scratch filters, III-189, IV-175
LM287 in, I-297
second-audio program adapter, III-142
security circuits, I-4, III-3-9
automotive security system, I-5, IV-49-56
home system, I-6, IV-87
infrared, wireless, IV-222-223
sense-of-slope tilt meter, II-664
sensors (*see also* alarms; control circuits; detectors; indicators; monitors)
0-50 C, four-channel temperature, I-648
air-flow sensor, thermistor bridge, IV-82
ambient light ignoring optical, III-413
capacitive, alarm for, III-515
cryogenic fluid level, I-386
differential temperature, I-655
humidity, II-285-287, III-266-267
IC temperature, I-649
isolated temperature, I-651
light level, I-367
light, back-biased GaAs LED, II-321
logarithmic light, I-366
magnetic current, low-power, III-341
motion, IV-341-346
motion, unidirectional, II-346
nanoampere, 100 megohm input impedance, I-203
optical interruption sensor, IV-366
photodiode amplifier for, II-324
precision temperature transducer with remote, I-649
proximity, II-505, III-514-518, IV-341-346
remote, loop transmitter for, III-70
remote temperature, I-654
self-biased proximity, detected changing field, I-135
short-circuit sensor, computer remote data lines, IV-102
simple differential temperature, I-654
temperature (*see also* temperature sensor), II-645, I-648, I-657
temperature, III-629-631, III-629
voltage regulators, LM317 design, IV-466
voltage sensor, power supplies, IV-423
voltage-level, III-770
water level, I-389
zero crossing detector with temperature, I-733
sequence indicator, phase, I-476
sequencer, pseudorandom, III-301
sequential flasher, II-233
ac, II-238
automotive turn signals, I-109
sequential timer, III-651
series connectors, telephone, III-609
servo amplifiers
400 Hz, II-386
bridge type ac, I-458
dc, I-457
servo motor drive amplifier, II-384
servo systems
controller, III-384
remote control, I-575
shaper, sine wave, II-561
shift registers, I-380, II-366
driver for, I-418
shifter, phase (*see* phase shifter)
ship siren, electronic, II-576
short-circuit proof lamp driver, II-310
shortwave transmissions
converters, III-114
converter, AM car radio, IV-500
FET booster, I-561
receiver, IV-454
short-circuit sensor, computer remote data lines, IV-102
shunt, multimeter shunt, IV-293
shutoff, automatic, battery-powered projects, III-61
shutter speed tester, II-445
sidetone oscillator, rf-powered, I-24
signal amplifiers, audio, IV-34-42
signal attenuator, analog, microprocessor-controlled, III-101
signal combiner, III-368
signal conditioners, IV-649
5V powered linearized platinum RTD, II-650
bridge circuit, strain gauge, II-85
linearized RTD, precision design, II-639
LVDT, II-338
thermally stabilized PIN photodiode, II-330
signal distribution amplifier, I-39
signal generators (*see also* function generators; sound generators; waveform generators)
AM broadcast-band, IV-302
AM/IF, 455 kHz, IV-301
high-frequency, II-150
square-wave, III-583-585
staircase, III-586-588
two-function, III-234
signal injectors, III-554-555
signal sources, crystal-controlled, II-143
signal tracer, three-in-one set: logic probe, signal tracer, injector, IV-429
signal-strength meters, III-342, IV-166
signal-supply, voltage-follower amplifiers, III-20
simulated inductor, II-199
simulators
EKG, three-chip, III-350
VOR signals, IV-273
sine-to-square wave converter, IV-120
sine-wave descrambler, II-163
sine-wave generators, square-wave and, tunable oscillator, III-232
sine-wave oscillators, I-65, II-560-570, III-556-559, III-560, IV-504-513
555 used as RC audio oscillator, II-567
adjustable, II-568
audio, II-562
audio, generator, III-559
audio, simple generator for, II-564
generator, IV-505
generator, LC sine-wave, IV-507
generator, LF, IV-512
generator, pure sine-wave, IV-506
generator, VLF audio tone, IV-508
generators, 60 Hz, IV-507
LC oscillator, low-frequency, IV-509
low distortion, II-561
one-IC audio generator, II-569
phase-shift, audio ranging, IV-510
programmable-frequency, III-424
relaxation, modified UJT for clean audio sinusoids, II-566
sine wave shaper, II-561
sine/square wave TTL oscillator, IV-512
two-tone generator, II-570
two-transistor design, IV-508
variable, super low-distortion, III-558
very-low distortion design, IV-509
Wien bridge, I-66, I-70, II-566, IV-511
Wien bridge, CMOS chip in, II-568
Wien-bridge, low-distortion, thermal stable, III-557
Wien-bridge, single-supply, III-558
Wien-bridge, three-decade 15 Hz to 15 kHz, IV-510
Wien-bridge, very-low distortion, IV-513
sine-wave output buffer amplifier, I-126
sine-wave to square-wave converter, I-170
sine/cosine generator, 0.1 to 10 kHz, II-260
sine/square wave oscillators, I-65
easily tuned, I-65
TTL design, IV-512

tunable, III-232
single-pulse generator, II-175
single-sideband (SSB) communications
CW/SSB product detector, IV-139
driver, low distortion 1.6 to 30MHz, II-538
generators, IV-323
transmitter, crystal-controlled LO for, II-142
sirens (*see also* alarms; sound generators), I-606, II-571, III-560-568
alarm using, II-572, II-573, IV-514-517
7400, II-575
adjustable-rate programmable-frequency, III-563
electronic, III-566, IV-515, IV-517
generator for, II-572
hee-haw, III-565, II-578
high power, II-578
linear IC, III-564
low-cost design, IV-516
multifunction system for, II-574
ship, electronic, II-576
sonic defender, IV-324
Star Trek red alert, II-577
tone generator, II-573
toy, II-575
TTL gates in, II-576
two-state, III-567
two-tone, III-562
varying frequency warning alarm, II-579
wailing, III-563
warble-tone siren, 6 W, IV-516
warble-tone siren, alternate tone, IV-515
whooper, IV-517
yelp oscillator, II-577, III-562
slave-flash trigger, IV-380, IV-382
slide timer, III-448
slide-show timer, III-444
sliding tone doorbell, II-34
smart clutch, auto air conditioner, III-46
smoke alarms and detectors, II-278, III-246-253
gas, I-332
ionization chamber, I-332-333
line-operated, IV-140
operated ionization type, I-596
photoelectric, I-595, I-596
sniffers (*see also* detectors; monitors)
heat, electronic, III-627
rf, II-210
snooper, FM, III-680
socket debugger, coprocessor, III-104
soldering station, IR-controlled, IV-225
soil moisture meter, III-208
solar-powered battery charger, II-71
solar-triggered switch, III-318
solenoid drivers, III-571-573
12-V latch, III-572
hold-current limiter, III-573
power-consumption limiter, III-572
solid-state devices
ac relay, III-570
electric fence charger, II-203
high-voltage supply, remote adjustable, III-486
relays, III-569-570
stepping switch, II-612
switch, line-activated, telephone, III-617
sonic defender, IV-324
sound-activated circuits (*see* sound-operated circuits)
sound generators (*see also* burst generators; function generators; sirens; waveform generators), I-605, II-585-593, III-559-568, III-575, IV-15-24, IV-518-524
amplifier, voltage-controlled, IV-20
amplifier/compressor, low-distortion, IV-24
allophone, III-733
audio tone generator, VLF, IV-508
autodrum, II-591
bagpipes, electronic, III-561, IV-521
beat-frequency, IV-371
bird chirp, I-605, II-588, III-577
bongos, II-587
chime generator, II-604
chime generator, single-chip design, IV-524
chug-chug, III-576
dial tone, I-629, III-609
ditherizing circuit, digital audio use, IV-23
doorbell, musical tones, IV-522
doubler, audio-frequency doubler, IV-16-17
echo and reverb, analog delay line, IV-21
electronic, III-360
envelope generator/modulator, II-601
equalizer, IV-18
fader, IV-17
frequency-shift keyer, tone-generator test circuit, I-723
funk box, II-593
fuzz box, III-575
guitar compressor, IV-519
harmonic generator, I-24, IV-649
high-frequency signal, III-150
hold for telephone, II-623
melody generator, single-chip design, IV-520
music maker circuit, IV-521
musical chimes, I-640
musical envelope, modulator, I-601, IV-22
noise generators, I-467, I-468, I-469, IV-308
octave-shifter for musical effects, IV-523
one-IC design, II-569
phasor sound generator, IV-523
pink noise, I-468
portable, I-625
race-car motor/crash, III-578
run-down clock for games, IV-205
sound effects, III-574-578
steam locomotive whistle, II-589, III-568
steam train/prop plane, II-592
stereo system, derived center-channel, IV-23
super, III-564
synthesizer, II-599
telephone call-tone generator, IV-562
telephone ringer, II-619
tone generator, burst, I-604
tone generator, portable design, I-625
Touchtone dial-tone, telephone, III-609
train chuffer, II-588
tremolo circuits, III-692-695, IV-589
twang-twang, II-592
two-tone, II-570
ultrasonic sound source, IV-605
unusual fuzz, II-590
warbling tone, II-573
white noise, IV-201
very-low frequency, I-64
vocal eliminator, IV-19
voice circuits, III-729-734
waa-waa circuit, II-590
white noise, IV-201
sound-level meters, III-346, IV-305, IV-307
meter/monitor, telephone, III-614
sound-operated circuits (*see also* ultrasonic circuits; voice-operated circuits), II-580-584, III-579-580, IV-525-528
amplifier, gain-controlled, IV-528
color organ, II-583, II-584
decoder, III-145
flash triggers, I-481, II-449, IV-382
lights, I-609
noise clipper, I-396
relay, I-608, I-610
switch, II-581, III-580, III-600, III-601, IV-526-527
switch, ac, II-581

sound-operated circuits (*cont.*)
switch, two-way, I-610
switch, voice-operated, III-580
switch, voice-activated, microphone-controlled, IV-527
speech activity detector, telephone, III-615
voice-operated switch, III-580
vox box, II-582
sources (*see* current sources; voltage sources)
source follower, photodiode, III-419
SPDT switch, ac-static, II-612
space war, I-606
speaker systems
FM carrier current remote, I-140
hand-held transceiver amplifiers, III-39
overload protector for, II-16
wireless, IR, III-272
speakerphone, II-611, III-608
speech-activity detector, II-617, III-619
speech compressor, II-15
speech filter
300 Hz-3kHz bandpass, I-295
second-order, 300-to-3,400 Hz, IV-174
two-section, 300-to-3,000 Hz, IV-174
speech network, II-633
speed alarm, I-95
speed controllers, I-450, I-453, II-378, II-379, II-455
back EMF PM, II-379
cassette-deck motor speed calibrator, IV-353
closed-loop, III-385
fans, automatic, III-382
dc motors, I-452, I-454, III-377, III-380
dc motor, direction control and, I-452
dc variable, fiber optic, II-206
feedback, I-447
fixed, III-387
high-efficiency, III-390
high-torque motor, I-449
light-activated/controlled, IV-247
load-dependent, I-451
model trains and/or cars, I-455, IV-338-340
motor, I-450, I-453
motor, dc, reversible, driver and, III-388
motor, high-efficiency, III-390
PWM, II-376
PWM, energy-recovering brake, III-380
radio-controlled, I-576
series-wound motors, I-448, II-456
shunt-wound motors, II-456
stepper motors, direction and speed control, IV-350
switched-mode, III-384
tachless, III-386
tachometer, II-378, II-389
tachometerless, IV-349
tools and appliances, I-446
universal motors, I-457
universal motors, load-dependent, II-451
speed warning device, I-96, I-101
speedometers, bicycle, IV-271, IV-282
splitters, III-581-582
battery, III-66
phase, precision, III-582
precision phase, I-477
voltage, III-738, III-743
wideband, III-582
squarer, precision, I-615
square-wave generators, II-594-600, III-583-585, IV-529-536
1 kHz, IV-536
2 MHz using two TTL gates, II-598
555 timer, II-595
astable circuit, IV-534
astable multivibrator, II-597
CMOS 555 astable, true rail-to-rail, II-596
duty-cycle multivibrator, III-50-percent, III-584
four-decade design, IV-535
high-current oscillator, III-585
line frequency, II-599
low-frequency TTL oscillator, II-595
multiburst generator, II-88
multivibrator, IV-536
oscillator, II-597, IV-532, IV-533
oscillator, with frequency doubled output, II-596
phase-tracking, three-phase, II-598
pulse extractor, III-584
quadrature-outputs oscillator, III-585
sine-wave, tunable oscillator, III-232
three-phase, II-600
tone-burst generator, single timer IC, II-89
triangle-wave, III-239
triangle-wave, precision, III-242
triangle-wave, programmable, III-225
triangle-wave, wide-range, III-242
TTL, LSTTL, CMOS designs, IV-530-532
variable duty-cycle, IV-533
variable-frequency, IV-535
square-wave oscillators, I-613-614, II-597, II-616, IV-532, IV-533
0.5 Hz, I-616
1kHz, I-612
square-to-sine wave converters, III-118
squelch circuits, II-394
AM/FM, I-547
voice-activated circuits, IV-624
squib firing circuits, II-357
stabilizer
fixed power supplies, CMOS diode network, IV-406
fixed power supplies, output stabilizer, IV-393
staircase generators, (*see also* waveform generators), II-601-602, III-586-588, IV-443-447
UA2240, III-587
stand-by power supply, non-volatile CMOS RAMs, II-477
standard, precision calibration, I-406
standard-cell amplifier, saturated, II-296
standing wave ratio (SWR)
meter, IV-269
power meter, I-16
QRP bridge, III-336
warning indicator, I-22
Star Trek red alert siren, II-577
start-and-run motor circuit, III-382
state-of-charge indicator, lithium battery, II-78
state-variable filters, II-215, III-189
multiple outputs, III-190
second-order, 1kHz, Q/10, I-293
universal, I-290
steam locomotive sound effects, II-589, II-592, III-568
static detector, IV-276
step-up switching regulator, 6V battery, II-78
step-up/step-down dc-dc converters, III-118
stepping motor driver, II-376, III-390
stepping switch, solid state, II-612
stereo circuits
amplifier, 12-V/20-W, IV-29
amplifier, Av/200, I-77
amplifier, bass tone control, I-670
audio-level meter, IV-310
audio-power meter, IV-306
balance circuit, II-603-605
balance meter, II-605, I-618-619
balance tester, II-604
decoder, frequency division multiplex, II-169
decoder, time division multiplex, II-18
decoder, TV-stereo, II-167
demodulator, II-159
demodulator, FM, I-544
derived center-channel system, IV-23
mixer, four-input, I-55
power meter, III-331

preamplifier, II-43, II-45
reception indicator, III-269
reverb systems, I-602, I-606
reverb systems, gain control in, II-9
TV-stereo decoder, II-167
stimulator, constant-current, III-352
stimulus isolator, III-351
stop light, garage, II-53
strain gauges
bridge excitation, III-71
bridge signal conditioner, II-85
instrumentation amplifier, III-280
strobe circuits, II-606-610
disco-, II-610
high-voltage power supplies, IV-413
safety flare, II-608
simple, II-607
tone burst generator, II-90
trip switch, sound activated, I-483
variable strobe, III-589-590
stud finder, III-339
subharmonic frequencies, crystal-stabilized IC timer, II-151
subtractor circuit, III-327
successive-approximation A/D converter, II-24, II-30
summing amplifiers, III-16
precision design, I-36
video, clamping circuit and, III-710
sun tracker, III-318
superheterodyne receiver, 3.5-to-10 MHz, IV-450-451
supply rails, current sensing in, II-153
suppressed-carrier, double-sideband, modulator, III-377
sweep generators
10.7 MHz, I-472
add-on triggered, I-472
oscilloscope-triggered, III-438
switches and switching circuits, II-611-612, III-591-594, IV-537
ac switch, battery-triggered, IV-387
analog, buffered, DTL-TTL-controlled, I-621
analog, differential, I-622
analog, high-toggle/high-frequency, I-621
analog, one MOSPOWER FET, III-593
antenna selector, electronic, IV-538-539
audio/video switcher circuit, IV-540-541
auto-repeat switch, bounce-free, IV-545
bidirectional relay switch, IV-472
bistable switch, mechanically controlled, IV-545
contact, I-136
dc static, II-367
debouncer, III-592
debouncer, computer switches, IV-105
debouncer, computer switches, auto-repeat, IV-106
debouncer, computer switches, flip-flop, IV-108
delay, auto courtesy light, III-42
DTL-TTL controlled buffered analog, I-621
fax/telephone switch, IV-552-553
FET dual-trace (oscilloscope), II-432
Hall-effect, III-257, IV-539
high-frequency, I-622
high-side power control switch, 5 V supply, IV-384, IV-385
infrared-activated, IV-345
latching, SCR-replacing, III-593
light-operated, II-320, III-314
light-operated, adjustable, I-362
MOSFET power control switch, IV-386
on/off inverter, III-594
on/off switch, IV-543
on/off switch, transistorized op-amp on/off switch, IV-546
optically coupled, high-voltage ac, III-408
optically coupled, zero-voltage, solid-state, III-410
over-temperature switch, IV-571
photocell memory, ac power control, I-363
photoelectric, II-321
photoelectric, ac power, II-326
photoelectric, synchronous, II-326
proximity, III-517
push on/off, II-359
pushbutton power control switch, IV-388
remote, on/off, I-577
remote, ring extender, I-630
rf, low-cost, III-361
rf, power switch, III-592
satellite TV audio switcher, IV-543
solar-triggered, III-318
solid-state stepping, II-612
sonar transducer/, III-703
sound-activated, II-581, III-580, III-600, III-601, IV-526-527
sound-activated, two-way, I-610
speed, I-104
SPDT, ac-static, II-612
switching controller, III-383
temperature control, low-power, zero-voltage, II-640
tone switch, narrowband, IV-542
touch switches (*see* touch switches)
touchomatic, II-693
triac, inductive load, IV-253
triac, zero point, II-311
triac, zero voltage, I-623
two-channel, I-623
ultrasonic, I-683
under-temperature switch, IV-570
VHF/UHF diode rf switch, IV-544
video, IV-618-621
video, automatic, III-727
video, general purpose, III-725
video, high-performance, III-728
video, very-high off isolation, III-719
voice-operated, I-608, III-580
voice-operated, microphone-controlled, IV-527
zero crossing, I-732
zero point, I-373, II-311
zero-voltage switching, closed contact half-wave, III-412
zero-voltage switching, solid-state, optically coupled, III-410
zero-voltage switching, triac design, I-623
switched-mode power supplies, II-470, III-458
50 W, off-line, III-473
100 kHZ, multiple-output, III-488
converter, +50V push pull, I-494
switched light, capacitance, I-132
switching inverter, 500 kHz, 12 V systems, II-474
switching power amplifier, I-33
switching regulators
3 A, III-472
5 V, 6 A, 25 uHz, separate ultrastable reference, I-497
6 A variable output, I-513
200 kHz, I-491
application circuit, 3W, I-492
fixed power supplies, 3 A, IV-408
high-current inductorless, III-476
low-power, III-490
multiple output MPU, I-513
positive, I-498
step-down, I-493
step-up, 6V battery, II-78
switching/mixing, silent audio, I-59
sync separators
single-supply wide-range, III-715
video circuits, IV-616
synthesizers
four-channel, I-603
frequency, programmable voltage-controlled, II-265
music, I-599

T

tachometers, I-100, I-102, II-175, III-335, III-340, III-595-598

tachometers (*cont.*)
analog readout, IV-280
calibrated, III-598
closed-loop, feedback control, II-390
digital, II-61, III-45, IV-268-269, IV-278
frequency counter, I-310
gasoline engine, I-94
low-frequency, III-596
minimum component, I-405
motor speed control, II-378, II-389
optical pick-up, III-347
set point, III-47
tandem dimmer, II-312
tap, telephone, III-622
tape-recorder circuits, I-21, I-419, III-599-601, IV-547-548
amplifier, I-90
amplifier, playback mode, IV-36
audio-powered controller, IV-548
automatic tape-recording switch, I-21, II-21
automotive-battery power circuit, IV-548
cassette-deck motor speed calibrator, IV-353
extended-play circuit, III-600
flat-response amplifier, III-673
interface for, II-614
playback amplifier, III-672, IV-36
position indicator/controller, II-615
preamplifier, I-90
sound-activated switch, III-600, III-601
starter switch, telephone-activated, I-632
telephone-activated starter switch, I-632, II-622, III-616
telephone-to-cassette interface, III-618
telemetry demodulator, I-229
telephone-related circuits, II-616-635, III-602-622, IV-549-564
amplifier, III-621, IV-560
answering machine beeper, IV-559
auto answer and ring indicator, I-635
automatic recording device, II-622
blinking phone light monitor, II-624, II-629
call-tone generator, IV-562
cassette interface, III-618
decoder, touch-tone, IV-555
dial pulse indicator, III-613
dialed-phone number vocalizer, III-731
dialer, pulse/tone, single-chip, III-603
dual tone decoding, II-620
duplex audio link, IV-554
duplex line amplifier, III-616
eavesdropper, wireless, III-620
fax-machine switch, remote-controlled, IV-552-553
flasher, phone-message, IV-556
flasher, tell-a-bell, IV-558
flasher, visual ring indicator, IV-559, IV-561
frequency and volume controller, II-623
hands-free telephone, III-605
handset encoder, I-634, III-613
hold button, II-628, III-612
in-use indicator, II-629, IV-560, IV-563
intercom, IV-557
light for, II-625
line interface, autopatch, I-635
line monitor, I-628
message-taker, IV-563
musical hold, II-623
musical ringer, II-619
night light, telephone controlled, III-604
off-hook indicator, I-633
optoisolator status monitor, I-626
parallel connection, III-611
piezoelectric ringer, I-636
power switch, ac, IV-550
pulse-dialing, III-610
recording calls, I-632, III-616
recording calls, auto-record switch, IV-558
recording calls, telemonitor, IV-553
redial, III-606
relay, I-631
remote monitor for, II-626
repeater, III-607
repertory dialer, line powered, I-633
ring detector, II-623, III-619, IV-564
ring detector, optically interfaced, III-611
ringers, IV-556
ringers, extension-phone ringer, IV-561
ringers, high isolation, II-625
ringers, multi-tone, remote programmable, II-634
ringers, musical, II-619
ringers, piezoelectric, I-636
ringers, plug-in, remote, II-627
ringers, relay, III-606
ringers, remote, II-627, III-614, IV-562
ringers, tone, I-627, I-628, II-630, II-631
scrambler, II-618
series connection, III-609
silencer, IV-557
sound level meter monitor, III-614
speaker amplifier, IV-555
speakerphone, II-632, III-608
speech activity detector, II-617, III-615
speech network, II-633
status monitor using optoisolator, I-626
switch, solid-state, line-activated, III-617
tap, III-622
tape-recorder starter controlled by, I-632
toll-totalizer, IV-551
tone-dialing, III-607
tone ringers, I-627, I-628, II-630, II-631
Touchtone generator, III-609
touch-tone decoder, IV-555
vocalizer, dialed-phone number, III-731
television-related circuits (*see also* video circuits)
amplifier, audio, III-39
amplifier, IF detector, MC130/MC1352, I-688
amplifier, IF/FM IF, quadrature, I-690
amplifier, RF, UHF TV-line amplifier, IV-482, IV-483
audio/video switcher circuit, IV-540-541
automatic turn-off, I-577
cross-hatch generator, III-724
data interface, TTL oscillator, II-372
decoder, stereo TV, II-167
IF detector, amplifier, MC130/MC1352, I-688
modulators, I-439, II-433, II-434
preamplifier, UHF, III-546
rf up-converter for TVRO subcarrier reception, IV-501
satellite TV audio switcher, IV-543
stereo-sound decoder, II-167
transmitter, III-676
transmitter, amateur TV, IV-599
temperature-related circuits (*see also* thermometers), IV-565-572
alarms, II-4, II-643
alarms, adjustable threshold, II-644
automotive temperature indicator, II-56, IV-48
automotive water-temperature gauge, IV-44
Centigrade thermometer, II-648
control circuits, I-641-643, II-636-644, III-623-628, IV-567
control circuits, defrost cycle, IV-566
control circuits, heater element, II-642

control circuits, heater protector, servo-sensed, III-624
control circuits, heat sniffer, electronic, III-627
control circuits, liquid-level monitor, II-643
control circuits, low-power, zero-voltage switch,II-640
control circuits, piezoelectric fan-based, III-627
control circuits, proportional, III-626
control circuits, signal conditioners, II-639
control circuits, single setpoint, I-641
control circuits, thermocoupled, IV-567
control circuits, zero-point switching, III-624
converters, temperature-to-frequency, I-646, I-168, I-656, II-651-653
converters, temperature-to-time, III-632-633
defrost cycle and control, IV-566
heater control, I-640, II-642, III-624
heat sniffer, III-627
hi/lo sensor, II-650
indicator, IV-570
indicator, automotive temperature, PTC thermistor, II-56
measuring circuit, digital, II-653
measuring sensor, transistorized, IV-572
meter, I-647
monitor, III-206
monitor, thermal monitor, IV-569
oscillators, crystal, temperature-compensated, I-187
oscillators, temperature-stable, II-427
over-temperature switch, IV-571
over/under sensor, dual output, II-646
remote sensors, I-649, I-654
sensors, I-648, I-657, II-645-650, III-629-631, IV-568-572
sensors, 0-50-degree C four channel, I-648
sensors, 0-63 degrees C, III-631
sensors, 5 V powered linearized platinum RTD signal conditioner, II-650
sensors, automotive-temperature indicator, PTC thermistor, II-56
sensors, Centigrade thermometer, II-648
sensors, coefficient resistor, positive, I-657
sensors, differential, I-654, I-655
sensors, over/under, dual output, II-646
sensors, DVM interface, II-647
sensors, hi/lo, II-650
sensors, integrated circuit, I-649
sensors, isolated, I-651, III-631
sensors, remote, I-654
sensors, thermal monitor, IV-569
sensors, thermocouple amplifier, cold junction compensation, II-649
sensors, thermocouple multiplex system, III-630
sensors, zero-crossing detector, I-733
signal conditioners, II-639
thermocouple amplifier, cold junction compensation, II-649
thermocouple control, IV-567
thermocouple multiplex system, III-630
transconducer, temperature-to-frequency, linear, I-646
transducer, temperature-transducer with remote sensor, I-649
under-temperature switch, IV-570
zero-crossing detector, I-733
temperature-to-frequency converter, I-168, I-656, II-651-653
temperature-to-frequency transconducer, linear, I-646
temperature-to-time converters, III-632-633
ten-band graphic equalizer, active filter, II-684
Tesla coils, III-634-636
test circuits (*see* measurement/test circuits)
text adder, composite-video signal, III-716
theremins, II-654-656
digital, II-656
electronic, II-655
thermal flowmeter, low-rate flow, III-203
thermocouple circuits
digital thermometer using, II-658
multiplex, temperature sensor system, III-630
pre-amp using, III-283
thermometer, centigrade calibrated, I-650
thermocouple amplifiers, I-654, II-14
cold junction compensation, II-649
high stability, I-355
thermometers, II-657-662, III-637-643, IV-573-577
0-50 degree F, I-656
0-100 degree C, I-656
adapter, III-642
add-on for DMM digital voltmeter, III-640
centigrade, I-655, II-648, II-662
centigrade, calibrated, I-650
centigrade, ground-referred, I-657
differential, I-652, II-661, III-638
digital, I-651, I-658
digital, temperature-reporting, III-638
digital, thermocouple, II-658
digital, uP controlled, I-650
electronic, II-660, III-639, IV-575, IV-576
Fahrenheit, I-658
Fahrenheit, ground-referred, I-656
high-accuracy design, IV-577
implantable/ingestible, III-641
kelvin, zero adjust, I-653, II-661
kelvin, ground-referred, I-655
linear, III-642, IV-574
low-power, I-655
meter, trimmed output, I-655
remote, II-659
single-dc supply, IV-575
variable offset, I-652
thermostats
electronic, remote ac, two-wire, I-639
electronic, three-wire, I-640
three-in-one test set, III-330
three-minute timer, III-654
three-rail power supply, III-466
threshold detectors, precision, III-157
tilt meter, II-663-666, III-644-646
differential capacitance measurement circuit, II-665
sense-of-slope, II-664
ultra-simple level, II-666
time base
crystal oscillator, III-133, IV-128
function generators, 1 Hz, for readout and counter applications, IV-201
time delays, I-668, II-220, II-667-670, III-647-649
circuit, precision solid state, I-664
constant current charging, II-668
electronic, III-648
generator, I-218
hour sampling circuit, II-668
integrator to multiply 555 timers, low-cost, II-669
long-duration, I-220
relay, I-663
relay, ultra precise long, I-219
timing threshold and load driver, III-648
two-SCR design, II-670
time division multiplex stereo decoder, II-168

timers, I-666, I-668, II-671-681, III-650-655, IV-578-586
0.1 to 90 second, I-663
741 timer, I-667
adjustable, IV-585
adjustable ac .2 to 10 seconds, II-681
alarm, II-674
appliance-cutoff timer, IV-583
CMOS, programmable precision, III-652
circuit, II-675
darkroom, I-480
elapsed time/counter timer, II-680
electronic egg, I-665
IC, crystal-stabilized, II-151
interval, programmable, II-678
interval, programmable, thumbwheel, I-660
long-delay, PUT, I-219
long-duration, PUT, II-675
long-duration, time delay, IV-585
long-interval, programmable, IV-581, IV-582
long-interval, RC, I-667
long-term electronic, II-672
long-time, III-653
mains-powered, IV-579
one-shot, III-654
photographic, I-485
photographic, darkroom enlarger, III-445
photographic, photo-event timer, IV-379
reaction timer, game circuit, IV-204
SCR design, IV-583
sequential, I-661-662, I-663, III-651
sequential UJT, I-662
slide-show, III-444
slides, photographic, III-448
solid-state, industrial applications, I-664
ten-minute ID timer, IV-584
three-minute, III-654
thumbwheel-type, programmable interval, I-660
time-out circuit, IV-586
transmit-time limiter, IV-580
triangle-wave generator, linear, III-222
variable duty-cycle output, III-240
voltage-controlled, programmable, II-676
washer, I-668
watchdog timer/alarm, IV-584
timing light, ignition, II-60
timing threshold and load driver, III-648
tone alert decoder, I-213
tone annunciator, transformerless, III-27-28
tone burst generators, I-604, II-90
European repeaters, III-74
tone controls (*see also* sound generators), I-677, II-682-689, III-656-660, IV-587-589
active bass and treble, with buffer, I-674
active control, IV-588
audio amplifier, II-686
Baxandall tone-control audio amplifier, IV-588
equalizer, ten-band octave, III-658
equalizer, ten-band graphic, active filter, II-684
guitar treble booster, II-683
high-quality, I-675
high-z input, hi fi, I-676
microphone preamp, I-675, II-687
mixer preamp, I-58
passive circuit, II-689
preamplifier, high-level, II-688
preamplifier, IC, I-673, III-657
preamplifier, microphone, I-675, II-687
preamplifier, mixer, I-58
rumble/scratch filter, III-660
three-band active, I-676, III-658
three-channel, I-672
tremolo circuit, IV-589
Wien-bridge filter, III-659
tone decoders, I-231, III-143
dual time constant, II-166
24 percent bandwidth, I-215
relay output, I-213
tone-dial decoder, I-631
tone detectors, 500-Hz, III-154
tone-dial decoder, I-630, I-631
tone-dial encoder, I-629
tone-dial generator, I-629
tone-dialing telephone, III-607
tone encoder, I-67
subaudible, I-23
tone-dial encoder, I-629
two-wire, II-364
tone generators (*see* sound generators)
tone probe, digital IC testing with, II-504
tone ringer, telephone, II-630, II-631
totem-pole driver, bootstrapping, III-175
touch circuit, I-137
touch switches, I-131, I-135-136, II-690-693, III-661-665, IV-590-594
CMOS, I-137
bistable multivibrator, touch-triggered, I-133
double-button latching, I-138
hum-detecting touch sensor, IV-594
lamp control, three-way, IV-247
low-current, I-132
On/Off, II-691, III-663, IV-593
line-hum, III-664
momentary operation, I-133
negative-triggered, III-662
positive-triggered, III-662
sensor switch and clock, IV-591
time-on touch switch, IV-594
touchomatic, II-693
two-terminal, III-663
Touchtone generator, telephone, III-609
toxic gas detector, II-280
toy siren, II-575
TR circuit, II-532
tracers
audio reference signal, probe, I-527
bug, III-358
closed-loop, III-356
receiver, III-357
track-and-hold circuits, III-667
sample-and-hold circuit, III-549, III-552
signal, III-668
tracking circuits, III-666-668
positive/negative voltage reference, III-667
preregulator, III-492
track-and-hold, III-667
track-and-hold, signal, III-668
train chuffer sound effect, II-588
transceivers (*see also* receivers; transmitters), IV-595-603
CE, 20-m, IV-596-598
CW, 5 W, 80-meter, IV-602
hand-held, dc adapter, III-461
hand-held, speaker amplifiers, III-39
HF transceiver/mixer, IV-457
ultrasonic, III-702, III-704
transducer amplifiers, III-669-673
flat-response, tape, III-673
NAB preamp, record, III-673
NAB preamp, two-pole, III-673
photodiode amplifier, III-672
preamp, magnetic phono, III-671, III-673
tape playback, III-672
voltage, differential-to-single-ended, III-670
transducers, I-86
bridge type, amplifier, II-84, III-71
detector, magnetic transducer, I-233
sonar, switch and, III-703
temperature, remote sensor, I-649
transistors and transistorized circuits
flashers, II-236, III-200
frequency tripler, nonselective, saturated, II-252
headphone amplifier, II-43

on/off switch for op amp, IV-546
pulse generator, IV-437
sorter, I-401
tester, I-401, IV-281
transmission indicator, II-211
transmitters (*see also* receivers; transceivers), III-674-691, IV-595-603
2-meter, IV-600-601
acoustic-sound transmitter, IV-311
amateur radio, 80-M, III-675
amateur TV, IV-599
beacon, III-683, IV-603
broadcast, 1-to-2 MHz, I-680
carrier current, I-144, I-145, III-79
computer circuit, 1-of-8 channel, III-100
CW, 1 W, III-678
CW, 10 W, one-tube, I-681
CW, 40 M, III-684
CW, 902 MHz, III-686
CW, HF low-power, IV-601
CW, QRP, III-690
fiber optic, III-177
FM, I-681
FM, infrared, voice-modulated pulse, IV-228
FM, multiplex, III-688
FM, one-transistor, III-687
FM, (PRM) optical, I-367
FM, snooper, III-680
FM, voice, III-678
FM, wireless microphone, III-682, III-685, III-691
half-duplex information transmission link, low-cost, III-679
HF, low-power, IV-598
infrared, I-343, II-289, II-290, III-277, IV-226-227
infrared, digital, III-275
infrared, FM, voice-modulated pulse, IV-228
infrared, remote control with receiver, I-342
line-carrier, with on/off, 200 kHz, I-142
low-frequency, III-682
multiplexed, 1-of-8 channel, III-395
negative key-line keyer, IV-244
optical, I-363, IV-368
optical, FM, 50 kHz center frequency, II-417
optical, receiver for, II-418
oscillator and, 27 and 49 MHz, I-680
output indicator, IV-218
remote sensors, loop-type, III-70
television, III-676
ultrasonic, 40 kHz, I-685
VHF, modulator, III-684
VHF, tone, III-681
treasure locator, lo-parts, I-409
treble booster, guitar, II-683
tremolo circuits, I-59, III-692-695, IV-589
voltage-controlled amplifier, I-598
triac circuits
ac-voltage controller, IV-426
contact protection, II-531
dimmer switch, II-310, III-303
dimmer switch, 800W, I-375
drive interface, direct dc, I-266
microprocessor array, II-410
relay-contact protection with, II-531
switch, inductive load, IV-253
trigger, I-421
voltage doubler, III-468
zero point switch, II-311
zero voltage, I-623
triangle-to-sine converter, II-127
triangle/square wave oscillator, II-422
triangle-wave generators, III-234
square-wave, III-225, III-239
square-wave, precision, III-242
square-wave, wide-range, III-242
timer, linear, III-222
trickle charger, 12 V battery, I-117
triggers
50-MHz, III-364
camera alarm, III-444
flash, photography, xenon flash, III-447
optical Schmitt, I-362
oscilloscope-triggered sweep, III-438
remote flash, I-484
SCR series, optically coupled, III-411
sound/light flash, I-482
triac, I-421
triggered sweep, add-on, I-472
tripler, nonselective, transistor saturation, II-252
trouble tone alert, II-3
TTL circuits
clock, wide-frequency, III-85
coupler, optical, III-416
gates, siren using, II-576
Morse code keyer, II-25
square wave to triangle wave converter, II-125
TTL to MOS logic converter, II-125
TTL oscillators, I-179, I-613
1MHz to 10MHz, I-178
television display using, II-372
crystal, I-197
sine/square wave oscillator, IV-512
tube amplifier, high-voltage isolation, IV-426
tuners
antenna tuner, 1-to-30 MHz, IV-14
FM, I-231
guitar and bass, II-362
turbo circuits, glitch free, III-186
twang-twang circuit, II-592
twilight-triggered circuit, II-322
twin-T notch filters, III-403
two-state siren, III-567
two-tone generator, II-570
two-tone siren, III-562
two-way intercom, III-292
two's complement, D/A conversion system, binary, 12-bit, III-166

U

UA2240 staircase generator, III-587
UHF transmissions
field-strength meters, IV-165
rf amplifiers, UHF TV-line amplifier, IV-482, IV-483
source dipper, IV-299
TV preamplifier, III-546
VHF/UHF rf diode switch, IV-544
wideband amplifier, high performance FETs, III-264
UJT circuits
battery chargers, III-56
metronome, II-355
monostable circuit, bias voltage change insensitive, II-268
ultrasonic circuits (*see also* sound-operated circuits), III-696-707, IV-604-606
arc welding inverter, 20 KHz, III-700
induction heater, 120-KHz 500-W, III-704
pest-controller, III-706, III-707
pest-repeller,I-684, II-685, III-699, IV-605-606
ranging system, III-697
receiver, III-698, III-705
sonar transducer/switch, III-703
sound source, IV-605
switch, I-683
transceiver, III-702, III-704
transmitter, I-685
undervoltage detector, IV-138
undervoltage monitor, III-762
uninterruptible power supply, II-462
+5V, III-477
unity-gain amplifiers
inverting, I-80
inverting, wideband, I-35
ultra high Z, ac, II-7
unity-gain buffer
stable, with good speed and high-input impedance, II-6
unity-gain follower, I-27
universal counters
10 MHz, II-139

universal counters (*cont.*)
40-MHz, III-127
universal mixer stage, III-370
universal power supply, 3-30V, III-489
up/down counter, extreme count freezer, III-125

V

vacuum fluorescent display circuit, II-185
vacuum gauge, automotive, IV-45
vapor detector, II-279
varactor-tuned 10 MHz ceramic resonator oscillator, II-141
variable current source, 100 mA to 2A, II-471
variable duty-cycle oscillator, fixed-frequency, III-422
variable-frequency inverter, complementary output, III-297
variable-gain amplifier, voltage-controlled, I-28-29
variable-gain and sign op amp, II-405
variable-gain circuit, accurate null and, III-69
variable oscillators, II-421
audio, 20Hz to 20kHz, II-727
four-decade, single control for, II-424
sine-wave oscillator, super low-distortion, III-558
wide range, II-429
variable power supplies, III-487-492, IV-414-421
adjustable 10-A regulator, III-492
current source, voltage-programmable, IV-420
dc supply, SCR variable, IV-418
dc supply, step variable, IV-418
dual universal supply, 0-to-50 V, 5 A, IV-416-417
regulated supply, 2.5 A, 1.25-to-25 V
regulator, Darlington, IV-421
regulator, variable, 0-to-50 V, IV-421
regulator/current source, III-490
switch-selected fixed-voltage supply, IV-419
switching regulator, low-power, III-490
switching, 100-KHz multiple-output, III-488
tracking preregulator, III-492
transformerless supply, IV-420
universal 3-30V, III-489
variable current source, 100mA to 2A, II-471
voltage regulator, III-491
vehicles (*see* automotive circuits)
VFO, 5 MHz, II-551
VHF transmissions
crystal oscillator, 20-MHz, III-138
crystal oscillator, 50-MHz, III-140
crystal oscillator, 100-MHz, III-139
modulator, I-440, III-684
tone transmitter, III-681
VHF/UHF diode rf switch, IV-544
video amplifiers, III-708-712
75-ohm video pulse, III-711
buffer, low-distortion, III-712
color, I-34, III-724
dc gain-control, III-711
FET cascade, I-691
gain block, III-712
IF, low-level video detector circuit, I-689, II-687
JFET bipolar cascade, I-692
line driving, III-710
log amplifier, I-38
RGB, III-709
summing, clamping circuit and, III-710
video circuits (*see also* television-related circuits), III-713-728, IV-607-621
audio/video switcher circuit, IV-540-541
camera-image tracker, analog voltage, IV-608-609
camera link, wireless, III-718
chroma demodulator with RGB matrix, III-716
color amplifier, III-724
color-bar generator, IV-614
composite-video signal text adder, III-716
converter, RGB-to-NTSC, IV-611
converter, video a/d and d/a, IV-610-611
cross-hatch generator, color TV, III-724
dc restorer, III-723
decoder, NTSC-to-RGB, IV-613
high-performance video switch, III-728
line pulse extractor, IV-612
loop-thru amplifier, IV-616
mixer, high-performance video mixer, IV-609
modulators, I-437, II-371, II-372
monitors, RGB, blue box, III-99
monochrome-pattern generator, IV-617
multiplexer, cascaded, 1-of-15, III-393
PAL/NTSC decoder with RGB input, III-717
palette, III-720
picture fixer/inverter, III-722
RGB-composite converter, III-714
signal clamp, III-726
switching circuits, IV-618-621
switching circuits, remote selection switch, IV-619
switching circuits, remote-controlled switch, IV-619-621
sync separator, IV-616
sync separator, single-supply wide-range, III-715
video op amp circuits, IV-615
video switch, automatic, III-727
video switch, general purpose, III-725
video switch, very-high off isolation, III-719
wireless camera link, III-71
vocal eliminator, IV-19
voice scrambler/descrambler, IV-26
voice scrambler/disguiser, IV-27
voice substitute, electronic, III-734
voice-activated circuits (*see also* sound-operated circuits), III-729-734, IV-622-624
ac line-voltage announcer, III-730
allophone generator, III-733
amplifier/switch, I-608
computer speech synthesizer, III-732
dialed phone number vocalizer, III-731
scanner voice squelch, IV-624
switch, III-580
switch, microphone-controlled, IV-527
switch/amplifier, I-608
voice substitute, electronic, III-734
VOX circuit, IV-623
voltage amplifiers
differential-to-single-ended, III-670
reference, I-36
voltage-controlled amplifier, I-31, I-598
attenuator for, II-18
tremolo circuit, I-598
variable gain, I-28-29
voltage-controlled filter, III-187
1,000:1 tuning, IV-176
voltage-controlled high-speed one shot, II-266
voltage-controlled ramp generator, II-523
voltage-controlled resistor, I-422
voltage-controlled timer, programmable, II-676
voltage-controlled amplifier, IV-20
tremolo circuit or, I-598
voltage-controlled oscillators, I-702-704, II-702, III-735, IV-625-630
3-5 V regulated output converter, III-739
10Hz to 10kHz, I-701, III-735-741

555-VCO, IV-627
audio-frequency VCO, IV-626
crystal oscillator, III-135, IV-124
current sink, voltage-controlled, IV-629
driver, op-amp design, IV-362
linear, I-701, IV-628
linear triangle/square wave, II-263
logarithmic sweep, III-738
precision, I-702, III-431
restricted-range, IV-627
stable, IV-372-373
supply voltage splitter, III-738
three-decade, I-703
TMOS, balanced, III-736
two-decade, high-frequency, I-704
varactorless, IV-630
variable-capacitance diode-sparked, III-737
VHF oscillator, voltage-tuned, IV-628
waveform generator, III-737
wide-range, IV-629
wide-range, biphase, IV-629
wide-range, gate, IV-627
voltage-controller, pulse generator, III-524
voltage converters, III-742-748
12-to-16 V, III-747
dc-to-dc, 3-25 V, III-744
dc-to-dc, dual output ± 12-15 V, III-746
flyback, high-efficiency, III-744
flyback-switching, self-oscillating, III-748
negative voltage, uP-controlled, IV-117
offline, 1.5-W, III-746
regulated 15-Vout 6-V driven, III-745
splitter, III-743
unipolar-to-dual supply, III-743
voltage detector relay, battery charger, II-76
voltage followers, I-40, III-212
fast, I-34
noninverting, I-33
signal-supply operation, amplifier, III-20
voltage inverters, precision, III-298
voltage meters/monitors/indicators, III-758-772
ac voltmeter, III-765
ac voltmeter, wide-range, III-772
audio millivoltmeter, III-767, III-769
automotive battery voltage gauge, IV-47
battery-voltage measuring regulator, IV-77
comparator and, II-104
dc voltmeter, III-763
dc voltmeter, resistance, high-input, III-762
DVM, 3.5-digit, full-scale 4-decade, III-761
DVM, 4.5-digit, III-760
FET voltmeter, III-765, III-770
five-step level detector, I-337
frequency counter, III-768
high-input resistance voltmeter, III-768
HTS, precision, I-122
level detectors, I-338, II-172, III-759, III-770
low-voltage indicator, III-769
multiplexed common-cathode LED ADC, III-764
over/under monitor, III-762
peak program detector, III-771
rf voltmeter, III-766
solid-state battery, I-120
ten-step level detector, I-335
visible, I-338, III-772
voltage freezer, III-763
voltage multipliers, IV-631-637
2,000 V low-current supply, IV-636-637
10,000 V dc supply, IV-633
corona wind generator, IV-633
doublers, III-459, IV-635
doubler, cascaded, Cockcroft-Walton, IV-635
doublers, triac-controlled, III-468
laser power supply, IV-636
negative-ion generator, high-voltage, IV-634
tripler, low-current, IV-637
voltage ratio-to-frequency converter, III-116
voltage references, III-773-775
bipolar source, III-774
digitally controlled, III-775
expanded-scale analog meter, III-774
positive/negative, tracker for, III-667
variable-voltage reference source, IV-327
voltage regulators, I-501, I-511, II-484
0- to 10-V at 3A, adjustable, I-511
0- to 22-V, I-510
0- to 30-V, I-510
5 V, low-dropout, III-461
5 V, 1 A, I-500
6 A, variable output switching, I-513
10 A, I-510
10 A, adjustable, III-492
10 V, high stability, III-468
15 V, 1 A, remote sense, I-499
15 V, slow turn-on, III-477
−15 V negative, I-499
45 V, 1 A switching, I-499
100 Vrms, I-496
ac, III-477
adjustable output, I-506, I-512
automotive circuits, III-48, IV-67
battery charging, I-117
bucking, high-voltage, III-481
common hot-lead regulator, IV-467
constant voltage/constant current, I-508
current and thermal protection, 10 amp, II-474
dual-tracking, III-462
efficiency-improving switching, IV- 464
fixed pnp, zener diode increases output, II-484
fixed-current regulator, IV-467
fixed-voltages, IV-462-467
flyback, off-line, II-481
high- or low-input regulator, IV-466
high-stability, I-499
high-stability, 1 A, I-502
high-stability, 10 V, III-468
high-voltage, III-485
high-voltage, foldback-current limiting, II-478
high-voltage, precision, I-509
low-dropout, 5-V, III-461
low-voltage, I-502, I-511
linear, low-dropout, III-459
linear, radiation-hardened 125 A, II-468
mobile, I-498
negative, III-474, IV-465
negative, -15 V, I-499
negative, floating, I-498
negative, switching, I-498
negative, voltage, I-499
positive, floating, I-498
positive, switching, I-498
positive, with NPN/PNP boost, III-475
positive, with PNP boost, III-471
pre-, SCR, II-482
pre-, tracking, III-492
projection lamp, II-305
PUT, 90 V rms, II-479
remote shutdown, I-510
negative, IV-465
sensor, LM317 regulator sensing, IV-466
short-circuit protection, low-voltage, I-502
single-ended, I-493
single-supply, II-471
slow turn-on 15 V, I-499
switch-mode, IV-463
switching, 3-A, III-472
switching, 3 W, application circuit, I-492

voltage regulators (*cont.*)
switching, 5 V, 6 A 25kHz, separate ultrastable reference, I-497
switching, 6 A, variable output, I-513
switching, 200 kHz, I-491
switching, multiple output, for use with MPU, I-513
switching, step down, I-493
switching, high-current inductorless, III-476
switching, low-power, III-490
variable, III-491, IV-468-470
variable, current source, III-490
zener design, programmable, IV-470
voltage sources
millivolt, zenerless, I-696
programmable, I-694
voltage splitter, III-738
voltage-to-current converter, I-166, II-124, III-110, IV-118
power, I-163
zero IB error, III-120
voltage-to-frequency converters, I-707, III-749-757, IV-638-642
1 Hz-to-10MHz, III-754
1 Hz-to-30 MHz, III-750
1Hz-to-1.25 MHz, III-755
5 KHz-to-2MHz, III-752
10Hz to 10 kHz, I-706, III-110
accurate, III-756
differential-input, III-750
function generators, potentiometer-position, IV-200
low-cost, III-751
low-frequency converter, IV-641
negative input, I-708
optocoupler, IV-642
positive input, I-707
precision, II-131
preserved input, III-753
ultraprecision, I-708
wide-range, III-751, III-752
voltage-to-pulse duration converter, II-124
voltmeters
3 1/2 digit, I-710
3 1/2 digital true rms ac, I-713
5-digit, III-760
ac, III-765
ac, wide-range, III-772
add-on thermometer for, III-640
bar-graph, I-99, II-54
dc, III-763
dc, high-input resistance, III-762
digital, III-4
digital, 3.5-digit, full-scale, four-decade, III-761
digital, LED readout, IV-286
FET, I-714, III-765, III-770
high-input resistance, III-768
millivoltmeters (*see* millivoltmeters)
rf, I-405, III-766
wide-band ac, I-716
voltohmmeter, phase meter, digital readout, IV-277
volume amplifier, II-46
volume control circuits, IV-643-645
telephone, II-623
volume indicator, audio amplifier, IV-212
VOR signal simulator, IV-273
vox box, II-582, IV-623
Vpp generator, EPROM, II-114
VU meters
extended range, II-487, I-715
LED display, IV-211

W

waa-waa circuit, II-590
wailers (*see* alarms; sirens)
wake-up call, electronic, II-324
walkman amplifier, II-456
warblers (*see* alarms; sirens)
warning devices
auto lights-on warning, II-55
high-level, I-387
high-speed, I-101
light, III-317
light, battery-powered, II-320
low-level, audio output, I-391
speed, I-96
varying-frequency alarm, II-579
water-level sensors (*see* fluid and moisture detectors)
water-temperature gauge, automotive, IV-44
wattmeter, I-17
wave-shaping circuits (*see also* waveform generators), IV-646-651
capacitor for high slew rates, IV-650
clipper, glitch-free, IV-648
flip-flop, S/R, IV-651
harmonic generator, IV-649
phase shifter, IV-647
rectifier, full-wave, IV-650
signal conditioner, IV-649
waveform generators (*see also* burst generators; function generators; sound generators; square-wave generators; wave-shaping circuits), II-269, II-272
audio, precision, III-230
four-output, III-223
harmonic generator, IV-649
high-speed generator, I-723
precise, II-274
ramp generators, IV-443-447
sawtooth generator, digital, IV-444, IV-446
sine-wave, IV-505, IV-506
sine-wave, 60 Hz, IV-507
sine-wave, audio, II-564
sine-wave, LC, IV-507
sine-wave, LF, IV-512
sine-wave oscillator, audio, III-559
staircase generators, IV-443-447
staircase generator/frequency divider, I-730
stepped waveforms, IV-447
triangle and square waveform, I-726
VCO and, III-737
wavemeter, tuned RF, IV-302
weather-alert decoder, IV-140
weight scale, digital, II-398
Wheel-of-Fortune game, IV-206
whistle, steam locomotive, II-589, III-568
who's first game circuit, III-244
wide-range oscillators, I-69, III-425
variable, I-730
wide-range peak detectors, III-152
hybrid, 500 kHz-1 GHz, III-265
instrumentation, III-281
miniature, III-265
UHF amplifiers, high-performance FETs, III-264
wideband amplifiers
low-noise/low drift, I-38
two-stage, I-689
rf, IV-489, IV-490, IV-491
rf, HF, IV-492
rf, JFET, IV-493
rf, MOSFET, IV-492
rf, two-CA3100 op amp design, IV-491
unity gain inverting, I-35
wideband signal splitter, III-582
wideband two-pole high pass filter, II-215
Wien-bridge filter, III-659
notch filter, II-402
Wien-bridge oscillators, I-62-63, I-70, III-429, IV-371, IV-377, IV-511
CMOS chip in, II-568
low-distortion, thermally stable, III-557
low-voltage, III-432
sine wave, I-66, I-70, II-566
sine-wave, three-decade, IV-510
sine-wave, very-low distortion, IV-513
single-supply, III-558
variable, III-424
wind-powered battery charger, II-70
windicator, I-330
window circuits, II-106, III-90, III-776-

781, IV-655-659
comparator, IV-658
comparator, low-cost design, IV-656-657
comparator, voltage comparator, IV-659
detector, IV-658
digital frequency window, III-777
discriminator, multiple-aperture, III-781
generator, IV-657
high-input-impedance, II-108
windshield wiper circuits
control circuit, I-103, I-105, II-62
delay circuit, II-55
delay circuit, solid-state, IV-64
hesitation control unit, I-105
intermittent, dynamic braking, II-49
interval controller, IV-67
slow-sweep control, II-55
windshield washer fluid watcher, I-107
wire tracer, II-343
wireless microphones (*see* microphones), IV-652
wireless speaker system, IR, III-272
write amplifiers, III-18

X

xenon flash trigger, slave, III-447
XOR gates, IV-107
complementary signals generator, III-226
oscillator, III-429
up/down counter, III-105

Y

yelp oscillator/siren, II-577, III-562

Z

Z80 clock, II-121
zappers, battery, II-64
ni-cad battery, II-66
ni-cad battery, version II, II-68
zener diodes
clipper, fast and symmetrical, IV-329
increasing power rating, I-496, II-485
limiter using one-zener design, IV-257
tester, I-400
variable, I-507
voltage regulator, programmable, IV-470
zero-crossing detector, II-173
zero meter, suppressed, I-716
zero-point switches
temperature control, III-624
triac, II-311
zero-voltage switches
closed contact half-wave, III-412
solid-state, optically coupled, III-410
solid-state, relay, antiparallel SCR output, III-416

Other Bestsellers of Related Interest

ENCYCLOPEDIA OF ELECTRONIC CIRCUITS Vol. 1—Rudolf F. Graf

". . . schematics that encompass virtually the entire spectrum of electronics technology . . . This is a well worthwhile book to have handy." —***Modern Electronics***

Discover hundreds of the most versatile electronic and integrated circuit designs, all available at at the turn of a page. You'll find circuit diagrams and schematics for a wide variety of practical applications. Many entries also include clear, concise explanations of the circuit configurations and functions. 768 pages, 1,762 illustrations. Book No. 1938, $32.95 paperback, $60.00 hardcover

THE ILLUSTRATED DICTIONARY OF ELECTRONICS—5th Edition

—Rufus P. Turner and Stan Gibilisco

This completely revised and updated edition defines more than 27,000 practical electronics terms, acronyms, and abbreviations. Find up-to-date information on basic electronics, computers, mathematics, electricity, communications, and state-of-the-art applications—all discussed in a nontechnical style. The author also includes 360 new definitions and 125 illustrations and diagrams. 736 pages, 650 illustrations. Book No. 3345, $26.95 paperback

ELECTRONIC CONVERSIONS: Symbols and Formulas—2nd Edition

—Rufus P. Turner and Stan Gibilisco

This revised and updated edition supplies all the formulas, symbols, tables, and conversion factors commonly used in electronics. Exceptionally easy to use, the material is organized by subject matter. Its format is ideal and you can save time by directly accessing specific information. Topics cover only the most-needed facts about the most often used conversions, symbols, formulas, and tables. 280 pages, 94 illustrations. Book No. 2865, $14.95 paperback only

ELECTRONIC DATABOOK—4th Edition

—Rudolf F. Graf

If it's electronic, it's here—current, detailed, and comprehensive! Use this book to broaden your electronics information base. Revised and expanded to include all up-to-date information, this fourth edition makes any electronic job easier and less time-consuming. You'll find information that will aid in the design of local area networks, computer interfacing structure, and more! 528 pages, 131 illustrations. Book No. 2958, $24.95 paperback only

BUILD YOUR OWN TEST EQUIPMENT

—Homer L. Davidson

Build more than 30 common electronic testing devices, ranging from simple continuity and polarity testers to signal injectors and power supplies. Also learn how test instruments work, how they are used, and how to save money. Each project includes a complete parts list with exact part numbers. 300 pages, 324 illustrations. Book No. 3475, $17.95 paperback, $27.95 hardcover

ELECTRONIC SIGNALS AND SYSTEMS: Television, Stereo, Satellite TV, and Automotive—Stan Prentiss

Study signal analysis as it applies to the operation and signal-generating capabilities of today's most advanced electronic devices with this handbook. It explains the composition and use of a wide variety of test instruments, transmission media, satellite systems, stereo broadcast and reception facilities, antennas, television equipment, and even automotive electrical systems. You'll find coverage of C- and Ku-band video, satellite master TV systems, high-definition television, C-QUAM® AM stereo transmission and reception, and more. 328 pages, 186 illustrations. Book No. 3557, $19.95 paperback, $29.95 hardcover

Prices Subject to Change Without Notice.

Look for These and Other TAB Books at Your Local Bookstore

To Order Call Toll Free 1-800-822-8158

(in PA, AK, and Canada call 717-794-2191)

or write to TAB Books, Blue Ridge Summit, PA 17294-0840.

Title	Product No.	Quantity	Price

☐ Check or money order made payable to TAB Books

Charge my ☐ VISA ☐ MasterCard ☐ American Express

Acct. No. _____ Exp. _____

Signature: _____

Name: _____

Address: _____

City: _____

State: _____ Zip: _____

Subtotal $ _____

Postage and Handling ($3.00 in U.S., $5.00 outside U.S.) $ _____

Add applicable state and local sales tax $ _____

TOTAL $ _____

TAB Books catalog free with purchase; otherwise send $1.00 in check or money order and receive $1.00 credit on your next purchase.

Orders outside U.S. must pay with international money in U.S. dollars

TAB Guarantee: If for any reason you are not satisfied with the book(s) you order, simply return it (them) within 15 days and receive a full refund. **BC**