This is a digital copy of a book that was preserved for generations on library shelves before it was carefully scanned by Google as part of a project to make the world's books discoverable online.

It has survived long enough for the copyright to expire and the book to enter the public domain. A public domain book is one that was never subject to copyright or whose legal copyright term has expired. Whether a book is in the public domain may vary country to country. Public domain books are our gateways to the past, representing a wealth of history, culture and knowledge that's often difficult to discover.

Marks, notations and other marginalia present in the original volume will appear in this file - a reminder of this book's long journey from the publisher to a library and finally to you.

Usage guidelines

Google is proud to partner with libraries to digitize public domain materials and make them widely accessible. Public domain books belong to the public and we are merely their custodians. Nevertheless, this work is expensive, so in order to keep providing this resource, we have taken steps to prevent abuse by commercial parties, including placing technical restrictions on automated querying.

We also ask that you:

+ *Make non-commercial use of the files* We designed Google Book Search for use by individuals, and we request that you use these files for personal, non-commercial purposes.

+ *Refrain from automated querying* Do not send automated queries of any sort to Google's system: If you are conducting research on machine translation, optical character recognition or other areas where access to a large amount of text is helpful, please contact us. We encourage the use of public domain materials for these purposes and may be able to help.

+ *Maintain attribution* The Google "watermark" you see on each file is essential for informing people about this project and helping them find additional materials through Google Book Search. Please do not remove it.

+ *Keep it legal* Whatever your use, remember that you are responsible for ensuring that what you are doing is legal. Do not assume that just because we believe a book is in the public domain for users in the United States, that the work is also in the public domain for users in other countries. Whether a book is still in copyright varies from country to country, and we can't offer guidance on whether any specific use of any specific book is allowed. Please do not assume that a book's appearance in Google Book Search means it can be used in any manner anywhere in the world. Copyright infringement liability can be quite severe.

About Google Book Search

Google's mission is to organize the world's information and to make it universally accessible and useful. Google Book Search helps readers discover the world's books while helping authors and publishers reach new audiences. You can search through the full text of this book on the web at `http://books.google.com/`

THE
MINERAL INDUSTRY
ITS
STATISTICS, TECHNOLOGY & TRADE

1898

THE
MINERAL INDUSTRY,

ITS STATISTICS, TECHNOLOGY AND TRADE

IN THE

UNITED STATES AND OTHER COUNTRIES.

EDITED BY

RICHARD P. ROTHWELL,

					£	S	D
Vol. I.	Fro				0	10	5
Vol. II.	Su				1	0	10
Vol. III.					1	0	10
Vol. IV.					1	0	10
Vol. V.					1	0	10
Vol. VI.	“	Vol. I-V	“ “ “ 1897,	5.00	1	0	10

PUBLISHED ANNUALLY.

THE SCIENTIFIC PUBLISHING CO.,
PUBLISHERS,

NEW YORK:
253 Broadway,

LONDON.
20 Bucklersbury.

THE MINERAL INDUSTRY,

ITS

STATISTICS, TECHNOLOGY AND TRADE,

IN THE

UNITED STATES AND OTHER COUNTRIES

TO THE END OF

1897.

EDITED BY

RICHARD P. ROTHWELL,

Editor of the Engineering and Mining Journal; Ex-President American Institute of
Mining Engineers; Member American Society of Civil Engineers;
Fellow Royal Statistical Society, London; Member of
American Statistical Association, etc.

VOL. VI.

SUPPLEMENTING VOLUMES I TO V.

NEW YORK AND LONDON:
THE SCIENTIFIC PUBLISHING COMPANY.
1898.

MINERAL INDUSTRY, VOLUME VI, 1897.

ERRATA.

PAGE 214, the production of copper in the United States in 1894, 1895, and 1896 was respectively as follows, the first figure in each case representing long tons (2240 lbs.) and the figure immediately following the corresponding number of metric tons: 163,394 (166,018), 177,881 (180,737), 214,199 (217,638). The table showing the world's production should be corrected accordingly. The totals will consequently be changed to the following: 326,703 (331,956), 343,625 (348 142), 386,548 (392,717).

PAGE 235, ninth line. Cu. 75 per cent. should read Cu. 7.5 per cent.

PAGE 336, third line from the bottom. For "1897" read "1896."

PAGE 363, seventeenth line. For "stamp amalgamation mill: tailings treated by chlorination" read "ore crushed with ball mills and treated by chlorination."

PAGE 469, statistics of the world's production of manganese ore: The figures for the United States should be altered to agree with those on page 467, and consequently should read as follows: 1892, 201,929 metric tons: 1893, 152,806; 1894, 241,613; 1895, 173,237; 1896, 165,135.

PAGE 673, eleventh line. For "E. A. Ashcroft" substitute "Carl Schnabel."

nger
work
it of

the
well
the
ers,
and
able
so
ep-
ich
ent
ave
ate

to
ists

potency of courtesy, on which the success of this work is dependent.

Great pains have been taken in the revision of all statistics, both foreign and domestic, published in this volume, the latest revised foreign official reports being used and correction made wherever fuller and more accurate data justified it. It is the aim of this work to furnish the most reliable statistics that exist, so that those who use them can feel assured that the figures here given relating to the mineral industry are trustworthy and more accurate than those in any other publication. The latest volume should always be used for the statistics it contains; those for earlier years are found in preceding volumes, which together contain all the statistics of the industry that have been collected in every country.

Previous to the publication of the first volume of THE MINERAL INDUSTRY statistics had been collected or production had been estimated for 53 substances.

PREFACE.

THE MINERAL INDUSTRY has completed its sixth year. It is now no stranger in any part of the world, for we believe never before has a technical work received so promptly and so universally the warm approval and endorsement of experts in every department of the industry it represents.

It is no longer necessary to repeat in preface the plans and objects of the work. They are now well known, and the volumes themselves show how well and how far these objects are being attained. There remains, however, to the Editor the most agreeable duty of thanking the tens of thousands of producers, the professional men everywhere, and the merchants who all with uniform and boundless courtesy have furnished, from every part of the world, the valuable technical and trade information and statistics which render these volumes so useful and have secured the success of the work. It is with feelings of the deepest gratitude that we acknowledge the universal confidence and courtesy which have thus been extended to us in every country. They have proved more efficient in securing trustworthy information than the mandates of Government, and have evoked sentiments whose beneficent effects will far transcend these immediate fruits.

These volumes constitute an enduring monument, builded by themselves, to the technical achievements of mining engineers, of metallurgists, and of chemists throughout the world, and they also commemorate the potency of courtesy, on which the success of this work is dependent.

Great pains have been taken in the revision of all statistics, both foreign and domestic, published in this volume, the latest revised foreign official reports being used and correction made wherever fuller and more accurate data justified it. It is the aim of this work to furnish the most reliable statistics that exist, so that those who use them can feel assured that the figures here given relating to the mineral industry are trustworthy and more accurate than those in any other publication. The latest volume should always be used for the statistics it contains; those for earlier years are found in preceding volumes, which together contain all the statistics of the industry that have been collected in every country.

Previous to the publication of the first volume of THE MINERAL INDUSTRY statistics had been collected or production had been estimated for 53 substances.

Now detailed statistics of about 100 substances are collected for it and published in its pages, and with much greater accuracy than had then been attained. Each year increases the number of substances treated, technically and statistically, and adds to the knowledge given, and generally widens the field of usefulness of this work.

As usual the greatest attention has been devoted to subjects that are uppermost in practice, and a special study of mining accidents has also been made in this volume, from which it is shown that coal mining, far from being "extra hazardous," is one of the least dangerous occupations, and the insurance rate on coal miners should be no greater than it is on those following other non-hazardous occupations—a very important fact for coal miners everywhere.

The progress in mining and metallurgy is also well illustrated in the advertising pages of this work. The manufacturers of all the best and most popular types of mining and milling machinery and metallurgical processes and appliances most in vogue there describe and illustrate them; so generally, in fact, that the readers of these volumes have learned to consider the absence of anything from these pages as an indication that it is losing ground or is being superseded by something newer.

CONTENTS OF VOLUME VI.

[Articles marked with an asterisk (*) are illustrated.]

INTRODUCTION.

ABRASIVES.

ALUMINUM.

ANTIMONY.

ARSENIC.

ASBESTOS.

ASPHALTUM.

BARYTES.

BAUXITE.

BISMUTH.

BORAX.

BROMINE.

CALCIUM CARBIDE AND ACETYLENE.*

CEMENT.

PAGE

—*The Manufacture of Hydraulic Cement in the United States* (by Frederick H. Lewis, p. 91).—Historical and Statistical Data—Production of Cement in Europe—Distribution of Natural Cement Rock in the United States—List of Portland Cement Works in the United States—Statistics of Portland Cement Production—Slag Cement—Geological and Chemical Data Relating to Cement—Character of Rock Used for Natural Cement—Manufacture of Natural Cement at Rosendale—Composition of Various Natural Cements—The Raw Material Employed in Portland Cement Manufacture in the United States—Analyses of Various Raw Materials Used in the United States and Europe—Comparative Composition of American, French, German, English and Belgian Portland Cement—Effect of Magnesia on Portland Cement—Adulteration of Portland Cement—Sulphate of Lime as an Agent for Retarding the Setting Time of Portland Cement—Results of Tests—Plant and Processes Employed in Cement Manufacture in the United States—Practice in the Rosendale District—Type of Kiln Employed—The Campbell Grate—Furnace Practice in Portland Cement Manufacture—The English Dome Kiln—The American Rotary Cylinder Kiln—The Johnson Kiln—Kilns of the Dietzsch Type—Aalborg Kilns—Kinds of Kilns Used and Approximate Output of the Chief Cement Works of the United States—Preparation of the Raw Material for Cement Manufacture—Grinding the Rock—Making the Ground Rock into Bricks or Balls—Drying the Bricks—The Griffin Mill—The German Ball Mill—The Danish Tube Mill—Fineness of American Cements—Tensile Strength of American Cements—Criteria of Quality—Standards of the American Society of Civil Engineers—The Michaelis Boiling Test—Tests of Tensile Strength—European Standards—Uses of Cement—In Submarine Construction—For the Construction of Arches—In the Construction of Fireproof Buildings.. 89

CHEMICAL INDUSTRY.

Manufacture of Alkali in the United States—Statistics of Production—Aluminum and Sulphate of Aluminum—Ammonium Sulphate—Bluestone—Copperas—Potassium Chlorate—Sulphuric Acid—Imports of Chemicals into the United States—The New York Chemical Market in 1897—Prices and General Conditions—The English Chemical Industry in 1897—A Nitric Acid Chlorine Process—Continuous Processes for Rectifying Sulphuric Acid—Loss of Ammonia in the Ammonia Soda Process—Amount of Salt Used in Alkali Manufacture in Great Britain—Statistics of the Production of Ammonium Sulphate—Production of Ammonia by Gas Works—Exports of Alkali from the United Kingdom—The United Alkali Co., Ltd.—*The American Chemical Industry* (by Henry P. Weidig, p. 124).—Domestic Practice in Sulphuric Acid Manufacture—Nitric Acid—Liquid Carbonic Acid—Production of Carbonic Acid as a By-product in Brewing—*The Manufacture of Sulphuric Acid Without Lead Chambers* (by George Lunge, p. 127).—The Direct Manufacture of Salt Cake by the Hargreaves-Robinson Process—"Intense Production"—Other Projects for Reducing the Chamber Space—Patents of Hannay, Durand & Huguenin, Barbier and Staub—Improbability that Lead Chambers Can Ever be Totally Abolished—Use of Coke Towers—Imperfection of Lead as an Acid-Proof Material—"Plate Towers"—Theory of the Chamber Process—Processes Involving the Combination of Sulphurous Acid and Oxygen by Catalytic Action—Manufacture of Fuming Sulphuric Acid—*The Hargreaves-Bird Electrolytic Process of Soda Manufacture* (by Edward Walker p. 132).—Apparatus Employed—Advantages over Other Soda Processes—Efficiency of the Electrolytic Cells—Cost of Production—Cost of Plant—*Progress in Electrochemistry in* 1897 (by H. Borns, p. 135).—Electricity Direct from Coal—Secondary Batteries—Electrolytic Engraving—Electrogalvanizing Processes—Electric Furnaces—Advan-

COPPER.

CRYOLITE.

FLUORSPAR.

FULLER'S EARTH.

GEMS AND PRECIOUS STONES.

GOLD AND SILVER.

ports of Gold—French Imports and Exports—American Imports and Exports—Shipments of Silver from London to the East—Gold Holdings of the Principal Banks—Monthly Prices of Silver—*Geological Occurrence and Associates of the Telluride Gold Ores* (by J. F. Kemp, p. 295).—Identification of Tellurium as an Element—Minerals Containing Tellurium—General Geological Relations—Review of the Regions Productive of Tellurides—Hungary—Nagyag—Offenbanya—United States—Arizona—Southern States — Colorado — Maine—Montana—Oregon—South Dakota—Texas—Utah—Canada—Honduras—Mexico—Siberia—Spain—Westralia—Resumé—**Notes on Gold Mining in Siberia* (by Réné de Batz, p. 321).—Statistics of Production—Administration of the Mines of Siberia—Regulations Governing Gold Mining—Method of Acquiring Property—Land Rent and Tax on Gold Extraction—General Character of the Auriferous Deposits—Their Geographical Distribution and Extent—Average Yield of Sand in the Different Districts of Siberia—Methods of Placer Mining Employed—Economic Conditions of Mining in Siberia—Drawings of the Apparatus Employed—Future of the Siberian Mines—Table of Concordance of Metric, Russian, English, and American Measures—Statistics of Gold Production of Russia and Siberia by Districts—*The Working Costs of West Australian Mines* (by H. C. Hoover, p. 334).—The Scarcity of Water—Cost of Fuel—High Cost of Mining Timber and other Supplies—Inefficiency of the Labor—Average Size and Number of Mills in the Various Districts—Amount of Ore Crushed and the Yield in 1897—Average Cost of Milling—Resources of Low Grade Ore in Western Australia—**Progress in the Metallurgy of Gold and Silver* (by Walter Renton Ingalls, p. 336).—Decline in Importance of the Amalgamation and Lixiviation Processes for Silver Extraction—Amount of Gold Produced by the Cyanide Process—Relative Importance of Methods of Gold Extraction in the United States—The Cyanide and Chlorination Processes in the Cripple Creek District—The Cyanide Process in Utah, Nevada, and Arizona—Cyanide Tank Practice—Roasting Previous to Cyaniding—Cyanide versus Chlorination in South Africa—Mechanical Concentration in Connection with the Cyanide Process—Metallurgical Practice at Johannesburg—Precipitation of Gold from Cyanide Solution—Precipitation of Gold by Zinc Thread from Dilute or Foul Cyanide Solution—Zinc versus Electricity for the Precipitation of Gold from Cyanide Solution—Technical Results in South African Works—Smelting Cyanide Bullion—Slimes Treatment in South Africa—Use of Lime in Clarifying the Liquor—The Bromo-Cyanide Process—Its Application at Day Dawn, Western Australia, and at Deloro, Canada—Amount of Cyanogen-Bromide Required—Precipitation of Gold by Zinc Fume—Refining the Precipitate by Distilling off the Zinc—Advantages and Disadvantages of the Bromo-Cyanide Process—Results of the Pelatan-Clerici Process at De Lamar, Idaho—The Keith Mercurio-Cyanide Process—Andreoli's Electro-Cyanide Process—Design of a Cheap Cyanide Plant—The Waihi Reduction Works, New Zealand—Treatment of Zinc-Box Precipitate—Influence of Temperature in Gold Amalgamation—Latest Results of the Russell Process at the Daly Mill, Park City, Utah—Mechanical Concentration in Connection with Chlorination—Method of Assaying Old Graphite Crucibles—Gold and Silver Assaying at Guanajuato—Estimation of Cyanogen by Silver Nitrate—Gold and Silver Literature of the Year—River Dredging for Gold—Introduction of the Process into New Zealand—Description of Dredges Employed at Bannack, Mont.—A Suction Dredge on the Snake River, Idaho—Dredging on the Yuba River in California—On the Chestatee River in Georgia—Dredging Low Placers in Siberia—A Land Placer Mining Machine Used in Montana—Official Reports of Gold and Silver Mining Companies, Giving Costs of Mining and Milling—Alice, Montana—Alaska-Mexican, Alaska—Daly, Utah—De Lamar, Idaho—Elkton, Colorado—Eureka Hill, Utah—Frazer, Western Australia—Gold Coin, Colorado—Great Boulder, Western Australia—Harquahala, Arizona—Hauraki, New

GRAPHITE.

GYPSUM.

IODINE.

IRON AND STEEL.

LEAD.

MAGNESITE.

MAGNESIUM.

MANGANESE.

MEERSCHAUM.

MICA.

MINERAL PAINTS.

MOLYBDENUM.

MONAZITE.

THE RARE ELEMENTS.

SALT.

SLATE.

SODA.

SODIUM.

STRONTIUM SULPHATE.

SULPHUR.

TALC AND SOAPSTONE.

TELLURIUM.

TIN.

TUNGSTEN.

URANIUM.

VANADIUM.

ZINC AND CADMIUM.*

TUNNEL RIGHTS UNDER THE UNITED STATES MINING LAW.

PROGRESS IN ORE DRESSING IN 1897.

AUSTRIA-HUNGARY.

BELGIUM.

CANADA.

CHILE.

CHINA.

FRANCE.

GERMANY.

GREECE.

INDIA.

ITALY.

JAPAN.

MEXICO.

NORWAY.

PORTUGAL.

RUSSIA.

SPAIN.

SWEDEN.

TURKEY.

UNITED KINGDOM.

UNITED STATES.

TABLES FOR CONVERTING UNITED STATES WEIGHTS AND MEASURES TO METRIC.

LINEAR.					CAPACITY.							
Inches to Millimeters.	Feet to Meters.	Yards to Meters.	Miles to Kilometers.		Drams to Cubic Centimeters.	Ounces to Milliliters.	Quarts to Liters.	Gallons to Liters.	Cubic Inches to Cubic Centimeters.	Cubic Feet to Cubic Meters.	Cubic Yards to Cubic Meters.	Bushels to Hectoliters.
25.4000	0.304801	0.914402	1.60935	= 1 =	3.70	29.57	0.94636	3.78544	16.387	0.02832	0.765	0.35242
50.8001	0.609601	1.828804	3.21869	= 2 =	7.39	59.15	1.89272	7.57088	32.774	0.05663	1.529	0.70485
76.2001	0.914402	2.743205	4.82804	= 3 =	11.09	88.72	2.83908	11.35632	49.161	0.08495	2.294	1.05727
101.6002	1.219202	3.657607	6.43739	= 4 =	14.79	118.30	3.78544	15.14176	65.549	0.11327	3.058	1.40969
127.0002	1.524003	4.572009	8.04674	= 5 =	18.48	147.87	4.73180	18.92720	81.936	0.14158	3.823	1.76211
152.4003	1.828804	5.486411	9.65608	= 6 =	22.18	177.44	5.67816	22.71264	98.323	0.16990	4.587	2.11454
177.8003	2.133604	6.400813	11.26543	= 7 =	25.88	207.02	6.62452	26.49808	114.710	0.19822	5.352	2.46696
203. 004	2.438405	7.315215	12.87478	= 8 =	29.57	236.59	7.57088	30.28352	131.097	0.22654	6.116	2.81938
228.6004	2.743205	8.229616	14.48412	= 9 =	33.28	266.16	8.51724	34.06896	147.484	0.25485	6.881	3.17181

SQUARE.					WEIGHT.			
Square Inches to Square Centimeters.	Square Feet to Square Decimeters.	Square Yards to Square Meters.	Acres to Hectaers.		Grains to Milligrams.	Avoirdupois Ounces to Grams.	Avoirdupois Pounds to Kilograms.	Troy Ounces to Grams.
6.452	9.290	0.836	0.4047	= 1 =	64.7989	28.3495	0.45359	31.10348
12.903	18.581	1.672	0.8094	= 2 =	129.5978	56.6991	0.90719	62.20696
19.355	27.871	2.508	1.2141	= 3 =	194.3968	85.0486	1.36078	93.31044
25.807	37.161	3.344	1.6187	= 4 =	259.1957	113.3981	1.81437	124.41392
32.258	46.452	4.181	2.0234	= 5 =	323.9946	141.7476	2.26796	155.51740
38.710	55.742	5.017	2.4281	= 6 =	388.7935	170.0972	2.72156	186.62089
45.161	65.032	5.853	2.8328	= 7 =	453.5924	198.4467	3.17515	217.72437
51.613	74.323	6.689	3.2375	= 8 =	518.3914	226.7962	3.62874	248.82785
58.065	83.613	7.525	3.6422	= 9 =	583.1903	255.1457	4.08233	279.93133

1 chain = 20.1169 meters.
1 square mile = 259 hectaers.
1 fathom = 1.829 meters.
1 nautical mile = 1853.27 meters.
1 foot=0.304801 meter, 9.4840158 log.
1 avoir. pound = 453.5924277 gram.
15432.35639 grains = 1 kilogram.

TABLES FOR CONVERTING METRIC TO UNITED STATES WEIGHTS AND MEASURES.

LINEAR.					CAPACITY.							
Meters to Inches.	Meters to Feet.	Meters to Yards.	Kilometers to Miles.		Milliliters or Cubic Centiliters to Fluid Drams.	Centiliters to Fluid Ounces.	Liters to Quarts.	Dekaliters to Gallons.	Hektoliters to Bushels.	Cubic Centimeters to Cubic Inches.	Cubic Meters to Cubic Feet.	Cubic Merets to Cubic Yards.
39.3700	3.28083	1.093611	0.62137	= 1 =	0.27	0.338	1.0567	2.6417	2.8375	0.0610	35.314	1.308
78.7400	6.56167	2.187222	1.24274	= 2 =	0.54	0.676	2.1134	5.2834	5.6750	0.1220	70.629	2.616
118.1100	9.84250	3.280833	1.86411	= 3 =	0.81	1.014	3.1700	7.9251	8.5125	0.1831	105.943	3.924
157.4800	13.12333	4.374444	2.48548	= 4 =	1.08	1.352	4.2267	10.5668	11.3500	0.2441	141.258	5.232
196.8500	16.40417	5.468056	3.10685	= 5 =	1.35	1.691	5.2834	13.2085	14.1875	0.3051	176.572	6.540
236.2200	19.68500	6.561667	3.72822	= 6 =	1.62	2.029	6.3401	15.8502	17.0250	0.3661	211.887	7.848
275.5900	22.96583	7.655278	4.34959	= 7 =	1.89	2.368	7.3968	18.4919	19.8625	0.4272	247.201	9.156
314.9600	26.24667	8 748889	4.97096	= 8 =	2.16	2.706	8.4534	21.1336	22.7000	0.4882	282.516	10.464
354.3300	29.52750	9.842500	5.59233	= 9 =	2.43	3.043	9.5101	23.7753	25.5375	0.5492	317.830	11.771

SQUARE.					WEIGHT.			
Square Centimeters to Square Inches.	Square Meters to Square Feet.	Square Meters to Square Yards.	Hectares to Acres.		Kilograms to Grains.	Hectograms to Ounces Avoirdupois.	Kilograms to Pounds Avoirdupois.	Grams to Ounces Troy.
0.1550	10.764	1.196	2.471	= 1 =	15432.36	3.5274	2.20462	0.03215
0.3100	21.528	2.392	4.942	= 2 =	30864.71	7.0548	4.40924	0 06430
0.4650	32.292	3.588	7.413	= 3 =	46297.07	10.5822	6.61386	0.09645
0.6200	43.055	4.784	9.884	= 4 =	61729.43	14.1096	8.81849	0.12860
0.7750	53.819	5.980	12.355	= 5 =	77161.78	17.6370	11.02311	0.16075
0.9300	64.583	7.176	14.826	= 6 =	92594.14	21.1644	13.22773	0.19290
1.0850	75.347	8.372	17.297	= 7 =	108026 49	24 6918	15.43235	0.22505
1.2400	86.111	9.568	19.768	= 8 =	123458.85	28.2192	17.63697	0 25721
1.3950	96.874	10.764	22.2	= 9 =	138891.21	31.7466	19.84159	0.28936

The only material standard of customary length authorized by the U. S. Government is the Troughton scale, whose length at 59°.62 Fahr. conforms to the British standard. The yard in use in the United States is therefore equal to the British yard.

The only authorized material standard of customary weight is the Troy pound of the Mint. It is of brass of unknown density, and therefore not suitable for a standard of mass. It was derived from the British standard Troy pound of 1758 by direct comparison. The British avoirdupois pound was also derived from the latter, and contains 7000 grains Troy.

The grain Troy is therefore the same as the grain avoirdupois, and the pound avoirdupois in use in the United States is equal to the British pound avoirdupois.

The British gallon = 4.54346 liters.

The British bushel = 36.3477 liters.

By the concurrent action of the principal Governments of the world an International Bureau of Weights and Measures has been established near Paris. Under the direction of the International Committee, two ingots were cast of pure platinum-iridium in the proportion of 9 parts of the former to 1 of the latter metal. From one of these a certain number of kilograms were prepared, from the other a definite number of meter bars. These standards of weight and length were intercompared, without preference, and certain ones were selected as International prototype standards. The others were distributed by lot to the different Governments and are called National prototype standards.

The metric system was legalized in the United States in 1866.

The International Standard Meter is derived from the Mètre des Archives, and its length is defined by the distance between two lines at 0° Centigrade, on a platinum-iridium bar deposited at the International Bureau of Weights and Measures.

The International Standard Kilogram is a mass of platinum-iridium deposited at the same place, and its weight *in vacuo* is the same as that of the Kilogramme des Archives.

The liter is equal to a cubic decimeter of water, and it is measured by the quantity of distilled water which, at its maximum density, will counterpoise the standard kilogram in a vacuum, the volume of such a quantity of water being, as nearly as has been ascertained, equal to a cubic decimeter.

Long ton: 2240 lb. avoirdupois = 1016 kilogram.
Short ton: 2000 " " = 907.2 "
Pound avoirdupois = 453.6 grams
Flask of mercury = 76½ lb. avoir. = 34.700 kilogram.
Troy ounce = 31.104 grams.
Gallon = 3.785 litres.

Barrel of petroleum = 42 gal. = 1.59 hectoliter.
" " salt = 280 lb. = 127 kilogram.
" " lime = 200 " = 90.720 "
" " natural cement = 300 " = 136.080 "
" " Portland cement = 400 " 181.440 "
Gold coining value per oz. c. $20.6718 = $0.6646 per gram.
Silver " " " " c. $1.2929 = $0.04157 " "

OFFICIAL UNITED STATES VALUES OF FOREIGN COINS, APRIL 1, 1898.

Country.	Standard.	Unit.	Value in U.S. Gold.	Coins.
			cts.	
Argentina	Both	Peso	96.5	Gold: argentine ($4.824) and ½ argentine. Silver: peso and divisions.
Austria-Hungary	Gold	Crown	20.3	Gold: former system—4 florins ($1.929), 8 florins ($3.858), ducat ($2.287), and 4 ducats ($9.158). Silver: 1 and 2 florins. Present system—Gold: 20 crowns ($4.052) and 10 crowns $2.026).
Belgium	Both	Franc	19.3	Gold: 10 and 20 francs. Silver: 5 francs.
Bolivia	Silver	Boliviano	40.9	Silver: boliviano and divisions.
Brazil	Gold	Milreis	54.6	Gold: 5, 10, and 20 milreis. Silver: ½, 1, and 2 milreis.
Canada	Gold	Dollar	100.0	
Central America:	Gold	Colon	46.5	Gold: 2, 5, 10, and 20 colons. Silver: 5, 10, 25, and 50 centimos.
Costa Rica Guatemala Honduras Nicaragua Salvador	Silver	Peso	40.9	Silver: peso and divisions.
Chile	Both	Peso	36.5	Gold: escudo ($1.825), doubloon ($3.650), and condor ($7.300). Silver: peso and divisions.
China	Silver	Tael*	67.3	
Colombia	Silver	Peso	40.9	Gold: condor ($9.647) and double-condor. Silver: peso.
Cuba	Both	Peso	92.6	Gold: doubloon ($5.017). Silver: peso.
Denmark	Gold	Crown	26.8	Gold: 10 and 20 crowns.
Ecuador	Silver	Sucre	40.9	Gold: condor ($9.647) and double-condor. Silver: sucre and divisions.
Egypt	Gold	Pound	494.3	Gold: pound (100 piasters). 5, 10, 20, and 50 piasters. Silver: 1, 2, 5, 10 and 20 piasters.
Finland	Gold	Mark	19.3	Gold: 20 marks ($3.859), 10 marks ($1.93).
France	Both	Franc	19.3	Gold: 5, 10, 20, 50, and 100 francs. Silver: 5 francs.
German Empire	Gold	Mark	23.8	Gold: 5, 10, and 20 marks.
Great Britain	Gold	Pound	486.65	Gold: sovereign (pound sterling) and ½ sovereign.
Greece	Both	Drachma	19.3	Gold: 5, 10, 20, 50, and 100 drachmas. Silver: 5 drachmas.
Haiti	Both	Gourde	96.5	Silver: gourde.
India	Silver	Rupee	19.4	Gold: mohur ($7.105). Silver: rupee and divisions.
Italy	Both	Lira	19.3	Gold: 5, 10, 20, 50, and 100 lire. Silver: 5 lire.
Japan	Gold	Yen	49.8	Gold: 5, 10, and 20 yen. Silver: 10, 20, and 50 sen.
Liberia	Gold	Dollar	100.0	
Mexico	Silver	Dollar	44.4	Gold: dollar ($0.983), 2½, 5, 10, and 20 dollars. Silver: dollar (or peso) and divisions
Netherlands	Both	Florin	40.2	Gold: 10 florins. Silver: ½, 1, and 2½ florins.
Newfoundland	Gold	Dollar	101.4	Gold: 2 dollars ($2.027).
Norway	Gold	Crown	26.8	Gold: 10 and 20 crowns.
Peru	Silver	Sol	40.9	Silver: sol and divisions.
Portugal	Gold	Milreis	108.0	Gold: 1, 2, 5, and 10 milreis.
Russia	Gold	Ruble	51.5	Gold: imperial ($7.718) and ½ imperial ($3.859). Silver: ¼, ½, and 1 ruble.
Spain	Both	Peseta	19.3	Gold: 25 pesetas. Silver: 5 pesetas.
Sweden	Gold	Crown	26.8	Gold: 10 and 20 crowns.
Switzerland	Both	Franc	19.3	Gold: 5, 10, 20, 50, and 100 francs. Silver: 5 francs.
Turkey	Gold	Piaster	04.4	Gold: 25, 50, 100, 250, and 500 piasters.
Uruguay	Gold	Peso	103.4	Gold: peso. Silver: peso and divisions.
Venezuela	Both	Bolivar	19.3	Gold: 5, 10, 20, 50, and 100 bolivars. Silver: 5 bolivars.

*Haikwan (Customs).

RICHARD P. ROTHWELL.

CONTRIBUTORS.

It is impossible to name here all who have aided us in the collection of statistics and other information for the present volume, but we give in the following pages brief biographies of those who have contributed special articles in order that readers may appreciate the high professional standing of those who have assisted in the work.

Our special thanks are due to Mr. Walter Renton Ingalls, upon whom the heaviest portion of the editorial work has devolved, and who has performed his duties with great ability and untiring devotion.

While space prevents us from extending the list we desire to express our grateful appreciation of the ready assistance and co-operation we have received from Mr. Worthington C. Ford, Chief of the Bureau of Statistics of the Treasury Department, and the Hon. George E. Roberts, Director of the Mint, who courteously placed at our disposal official figures relating to imports and exports and gold and silver production: to William B. Cogswell, Esq., for statistics relating to the soda industry; to W. R. Shields, Esq., for statistics of bromine; to Mr. J. Langeloth, president of the American Metal Co., Ltd.; Mr. John Stanton, of the Copper Producers' Committee; A. Hecksher, Esq., of the New Jersey Zinc Co., and Mr. L. A. Cole, president of the National Lead Co.; to Robert R. Bulmore and Edward Strasburg, of California; O. B. Leonard, of New York; O. E. Thurber, of the New Trinidad Lake Asphalt Co., Ltd.; John F. Blandy, W. P. Blake, and R. M. Tuttle.

Special acknowledgment is due Mr. H. W. Woolf, Freight Auditor of the Southern Railway Co.; W. H. Allen, Auditor of Freight Accounts Boston & Maine Railroad Co.; Mr. R. B. Smith, Secretary of the Plant System; Alexander Douglas, General Auditor of the St. Louis & San Francisco Railroad Co.; J. E. Dennison, Auditor of the Mexican International Railroad Co., and the officials of the Atchison, Topeka & Santa Fe, Southern Pacific and Union Pacific Railway systems; T. W. Roby, Auditor of the Florida Central & Peninsula Railroad Co.; Geo. Strong, Auditor of the Fort Worth & Denver City Railway Co.; and L. H. Stewart, Local Auditor of the Delaware & Hudson Canal Co.

Special acknowledgment is also due to State officials who have been active in their co-operation: J. H. Calderhead, Commissioner of Agriculture, Labor and Industry, Montana; E. B. Braden, Helena, Mont.; David Ross, Secretary of Bureau of Labor Statistics of Illinois; Prof. Erasmus Haworth, State Geologist of Kansas; George E. Quinby, State Mine Inspector of Missouri; Eugene A. Smith, State Geologist of Alabama; A. S. Cooper, State Mineralogist, San Francisco; Harry A. Lee, Commissioner of Mines, Colorado; W. S. Blatchley, State Geologist, Indiana; G. W. Stone, State Geologist, Kentucky; George A. Newett, Commissioner of Minerals of Michigan; J. B. Caswell, State Salt Inspector of Michigan; J. F. Trask, Commissioner of Labor of New Hampshire; J. C. Smock, State Geologist of New Jersey; J. A. Holmes, State Geologist of North Carolina; J. E. Todd, State Geologist of South Dakota· and E. A. Birge, Director of Geological Survey of Wisconsin. Acknowledgment is due also to the inspectors of the coal mines in each of the States, who have, with great courtesy and promptness furnished us with their statistics of coal and coke production.

From abroad: E. Grohmann, for late mineral statistics of Greece; W. Van Esveld, of Paramaribo, Dutch Guiana; Hon. James C. Chambers, the United States Consul at Batoum; Luis Dufour, Mexican statistics; T. A. Coghlan, Statistician of New South Wales; J. R. Martin, Assistant Statistician, New South Wales; Henry W. Edwards, New Caledonia statistics; W. A. Abegg, Russian statistics; Henry R. Merton & Co. of London, and Jackson Bros. of Valparaiso.

The statisticians of foreign countries have been uniformly courteous in sending us their latest publications, but we have to make a special acknowledgment to Don Javier Stavoli, of the Secretaria de Fomento, Mexico; Senhor Luciano Augusto da Fonseca Monteiro, Chief of the Reparticao de Minas, Ministerio das Obras Publicas, of Portugal, and His Excellency Selim Melhame. Minister of Agriculture, Mines and Forests of Turkey, and the Grossherzogliche Badische Domänendirektion, for manuscript reports of mineral production specially prepared for THE MINERAL INDUSTRY. Also to Archibald Blue, Director of Bureau and Mines of Ontario; William A. Carlyle, Provincial Mineralogist of British Columbia; Elfric Drew Ingall, Mining Engineer to the Geological Survey of Canada, and E. Gilpin, for statistical information in advance of their own publications.

ADAMS, WILLIAM H., was born at White Lake, Mich., in 1843. His family removed to Syracuse, N. Y., in 1847, where he received his early education. At the beginning of the Civil War he entered the Federal army, and served until the summer of 1863, when he was invalided home. A journey to Canada in 1864 caused him to become interested in the mining and smelting of copper, and in 1865 he was given charge of the Hartford copper mine, which position he held until 1874. Between 1868 and 1876 he was also supervising engineer in the erection of chemical works at London and Quebec in Canada, and at Malden and Bridgeport, Conn., in which works he made various novel installations for the manufacture of sulphuric acid, certain of which he has described in papers in *The Engineering and Mining Journal* and the *Transactions of the American Institute of Mining Engineers*. Since 1870 his attention has been devoted almost entirely to the exploitation of pyrites mines and the manufacture of sulphuric acid from their ores. Mr. Adams contributes to this volume the review on "Pyrites."

ARGALL, PHILLIP, a well-known mining engineer and metallurgist, was born in 1854, near Belfast, Ireland, and gained his first experience in mining at the Wicklow copper mines in that island. Since then he has been engaged in important mining and metallurgical work in Wales, England, France, New Zealand, Mexico, and elsewhere. He came to the United States early in 1887 as manager of La Plata Mining and Smelting Co. of Leadville, Colo. During the last five years Mr. Argall has devoted his attention to the treatment of ores by the cyanide process, and has taken a leading position in this field. He designed the works of the Metallic Extraction Co. at Cyanide, Colo., in 1895, and has been their manager since that time. His success in the treatment of telluride ores on a large scale, and particularly in the introduction of roasting as an essential feature in cyanide treatment, has commanded much attention in metallurgical circles. For the present volume of he has written a paper on "Cyaniding Telluride Ores," which is up to date the most authoritative discussion of this subject.

AUSTIN, LEONARD S., is a graduate of Yale in the course of mechanical engineering, which profession he followed for five years. Having then prepared himself by a post-graduate course in chemistry and mining engineering, he went to Utah in 1880, and has since confined himself to the metallurgy of lead and copper at various Western smelting works as foreman, chemist, and superintendent, having been connected with the Germania Lead Works at Salt Lake City, the Standard Smelting and Refining Co. at Durango, Colo., the Viola Mining and Smelting Co. at Nicholia, Idaho, and elsewhere. He has made a number of contributions to *The Engineering and Mining Journal* and the *Transactions of the American Institute of Mining Engineers*, all on subjects relating to lead and copper smelting, and has written for this volume the paper on "Recent Smelting Practice in Colorado."

BAIN, H. FOSTER, graduated from Moores Hill College in Indiana in 1890. He studied geology and chemistry at Johns Hopkins from 1891 to 1893, and was a fellow of the University of Chicago in 1896 and 1897, receiving from the latter the degree of Ph. D. Since 1893 Dr. Bain has been Assistant State Geologist of Iowa and lecturer on economic geology at the State University. He contributes to this volume the article on the manufacture of clay ballast.

BARBOUR, ERWIN HINCKLEY, studied first at Miami University at Oxford, O., and then entered Yale, where he graduated in 1882. He received his doctor's degree at Yale in 1887. Upon graduation he was appointed assistant paleontologist in the United States Geological Survey, and occupied that position until 1888. In 1889 he was called to the chair of geology and natural history in Iowa College, and in 1891 to the University of Nebraska, where he has served to the present time. In connection with his professional duties, however, he has continued working for the United States Geological Survey, is Acting State Geologist of Nebraska,

SOME OF THE CONTRIBUTORS TO THE MINERAL INDUSTRY.

PHILIP ARGALL.

L. S. AUSTIN.

ERWIN H. BARBOUR.

P. R. BJORLING.

W. H. BLAUVELT.

H. BORNS.

W. Y. CAMPBELL.

SOME OF THE CONTRIBUTORS TO THE MINERAL INDUSTRY.

A. L. COLLINS.

ALFRED H. COWLES.

RENÉ DE BATZ.

JAMES DOUGLAS.

L. M. DENNIS.

G. P. GRINSLEY.

H. O. HOFMAN.

and Geologist for the State Board of Agriculture. He has written for this volume the article on the volcanic ash deposits of Nebraska.

Bjorling, Philip R., born in 1842 at Stockholm, Sweden, studied at the Academy in Westeras, and afterward at the technical school of Stockholm. In 1860 he began his engineering career at the Bergsunds Mekaniska Wärkstad, where he remained until 1863, when, on account of ill health, he removed to Scotland, and in 1864 to Leeds, where he became employed as draughtsman for John Fowler & Co., remaining in that position nearly seven years. He then became engaged as chief draughtsman for Carrett, Marshall & Co., remaining with them for several years. In 1878 he was chief draughtsman and general manager of the pumping engine department for May & Mountain, of Birmingham. The last four years Mr. Björling has been engaged in lecturing and literary work and as consulting engineer. He is the author of numerous technical treatises, especially on pumps and hydraulic machinery. He contributes to this volume the elaborate article on "Briquette Manufacture."

Blauvelt, William Hutton, after spending four years in chemical and blast-furnace work, entered Lafayette College, at Easton, Pa., and graduated from the mining and engineering course in 1886. He then returned to the iron business, but soon realizing the growing importance of the problems connected with the economical handling and use of fuel, he decided to enter that field, for which his previous training had well prepared him. In 1889 he began the study of fuel utilization, and has since devoted his whole time to the development of the manufacture and use of gas for fuel purposes, the manufacture of coke, and the economical use of fuel. Nearly three years of this time was spent in developing the use of the inferior coals of the far West and in improving the methods of using fuel in the smelteries of that region. Mr. Blauvelt contributes to Vol. VI. the article on "By-product Coke Ovens."

Borns, H., studied natural science in Germany, at Halle and Greifswald. Illness having compelled him to give up practical chemical work, he has become a journalist, writing especially on technical subjects. He contributes to this volume the paper on electrochemistry.

Campbell, W. Y., is actively engaged in mining operations at Johannesburg, South Africa, having charge of extensive investments in that district. He is a fellow of the Geological Society of London, a member of the North of England Institute of Mining and Mechanical Engineers, and a life member of the American Institute of Mining Engineers. Mr. Campbell contributed to *The Engineering and Mining Journal* in 1897 an exhaustive series of papers on the mining conditions in South Africa, and for this volume has furnished the statistics of production, etc., and a review of gold mining on the Witwatersand during the past year.

Collins, Arthur L., born in Cornwall, England, is a son of J. H. Collins, past president of the Institute of Mining and Metallurgy, under whom he was trained at the Rio Tinto mines in Spain. He was first employed in 1882 as assayer and underground surveyor by the Peninsular Copper Co., in Southern Spain. In 1884 he took charge of an experimental smelting works in Cornwall where he was engaged for two years, and then for three years lived in Norway as manager of an extensive zinc mine on the west coast. For the next few years he was engaged actively as partner in the firm of J. H. Collins & Sons, consulting engineers, of London, examining mines in many parts of the world, including Burma, Norway, Spain, Australia, and Tasmania. In 1892 he was appointed geologist and mining engineer to the Ameer of Afghanistan, and spent a year traveling in the wildest part of Central Asia. Since February, 1894, he has lived in Colorado as manager of the California mine at Central City, the Terrible mine at Georgetown, and other properties in the northern part of the State. He is also consulting engineer of the Gold Coin Mines Co. of New York, which operates extensive mines and mills in Gilpin County, Colo. Mr. Collins was elected a fellow of the Geological Society in 1892, and is a member of various English and American technical societies. He contributes to the present volume the article on "Gold Milling in Colorado."

Cowles, Alfred H., born in 1857, at Cleveland, O., studied at the Ohio State University, and afterward for four years at Cornell. Upon leaving college he devoted two years to mining in New Mexico. In 1884 and 1885, associated with his brother, the late Eugene H. Cowles, he invented the well known Cowles electric furnace and smelting process, establishing the

Cowles Electric Smelting and Aluminum Co., with works at Lockport, N. Y. In 1887 they organized the Cowles Syndicate Co. in England, erecting large works at Milton, near Stoke-on-Trent, which in 1894 was reorganized into the British Aluminum Co. In 1886 the Elliot Crescent gold medal and the John Scott Legacy medal was awarded to Cowles Bros. by the committee of Science and Arts of the Franklin Institute, this being only the second occasion when the two medals had been granted for the same process and apparatus. Mr. Cowles is now president of the Electric Smelting and Aluminum Co. of Cleveland, O., and the Cowles Electric Smelting and Aluminum Co. of Lockport, N. Y., the former being the present owner of his American patents. The Lockport works are engaged in the production of calcium carbide, and on this and the uses of acetylene Mr. Cowles contributes to this volume.

DE BATZ, RENE, baron, was born in 1865, in the south of France, and studied mining and metallurgy at the Ecole des Mines at Paris. In 1889 he came to the United States as engineer for the Lexington Mining Co. of Butte, Mont., and in 1893 was appointed by the French government an assistant commissioner to the World's Fair in Chicago. He then returned to France, where he has been employed as consulting engineer by French capitalists, examining mines in the United States, British Columbia, the Ourals and Eastern Siberia. He has traveled extensively in Siberia, and is one of the engineers most thoroughly acquainted with the gold mines of that country. He has published several papers descriptive of them in *Le Genie Civil*, and is also the author of a treatise on *The Auriferous Deposits of Siberia*, published in 1897, which is a very useful work.

DENNIS, L. M., studied at the University of Michigan, receiving the degree of Ph. B. in 1885 and B. S. in chemistry in 1886. After teaching one year at La Porte he was for two years instructor in chemistry at Cornell University. From 1889 to 1891 he studied under Fresenius in Wiesbaden, Classen in Aachen, Hempel in Dresden, and Krüss in Munich. In 1891 he returned to Cornell as assistant professor of analytical chemistry, became associate professor in 1893 and professor in 1897. Prof. Dennis has contributed to this volume the papers on the "Rare Elements," "Monazite," "Vanadium," "Tellurium" and "Uranium."

DONALD, J. T., graduated from McGill College in Montreal in 1878, receiving the Logan gold medal in geology and natural science. After a post-graduate course of two years in chemistry and assaying he visited mines and chemical works in Great Britain and the Continent, and since 1881 has been engaged as a consulting chemist and geologist at Montreal, being also professor of chemistry in the medical faculty of Bishop's College. Prof. Donald has given special attention to asbestos mining, on which subject he writes for the present volume.

DOUGLASS, JAMES, is a Canadian, who has made his home in the United States since 1875. His first experience in mining and metallurgy was acquired in trying to unravel the complicated affairs of an unsuccessful Canadian mining enterprise. He came to the States in order to take charge of copper works established in Phœnixville, Pa., for the utilization of local copper ores, whose supply, however, proved deficient, but he is best known through his connection with the copper industry of Arizona, with which he has been intimately associated almost since its initiation. He is president of the Copper Queen Consolidated Mining Co. and of other Arizona concerns, and is also president of the Arizona & Southern Railroad Co. Such original work as he has done was chiefly in connection with the late eminent chemist, Dr. T. Sterry Hunt, in the field of the hydrometallurgy of copper. Mr. Douglass contributes to this volume the article on "The Copper Industry of Arizona."

GRIMSLEY, G. PERRY, graduated from the Ohio State University in 1890 and received the degree of Ph. D. from Johns Hopkins in 1894. He was then connected with the Ohio Geological Survey for two years, being engaged on work on coal, clay, and building stone. In Maryland he made a study of the granite of the northeastern part of the State. For the last two years he has been assistant geologist on the University Geological Survey of Kansas, employed especially in studying the gypsum deposits, and has also been professor of geology and natural history in Washburn College at Topeka. He has written for the present volume the article on "The Gypsum Deposits of Kansas."

HOBART, FREDERICK, A. M. of the College of the City of New York, has been connected

SOME OF THE CONTRIBUTORS TO THE MINERAL INDUSTRY.

F. L. HOFFMAN.

WALTER RENTON INGALLS.

H. A. KELLER.

JAMES F. KEMP.

WILBUR C. KNIGHT.

HENRY LOUIS.

GEORGE LUNGE.

with the Jersey City Locomotive Works; Bullock Machine Co., Jersey City; Wrigley Machine Works, Newark, N. J.; Grant Locomotive Works, Paterson, N. J.; has been assistant editor of the *Railroad Gazette*, associate editor *Railroad and Engineering Journal*, assistant editor *Engineering and Mining Journal*, a contributor to various technical periodicals, and is the translator of *Notes on Steam Hammers* and *Economies in the Combustion of Fuel*. Mr. Hobart has contributed to this volume the reviews on "Iron and Steel" and "Coal and Coke."

HOFFMAN, FREDERICK L., was born at Varel, Germany, in 1865, and came to the United States at the age of 19. He became engaged in the life insurance business in 1887 and in 1893 accepted a position as statistical expert with the Prudential Insurance Co. of America, at Newark, N. J. Mr. Hoffman is the author of *Race Traits and Tendencies of the American Negro*, and has been a frequent contributor to statistical and insurance publications.

HOFMAN, H. O., was born in 1852 at Heidelberg, Germany. He studied at the Bergakademie at Clausthal, where he graduated in 1877 in mining engineering and metallurgy. He was then appointed chemist and assistant at the government smelting and refining works at Lautenthal in the Harz. In 1881 he came to the United States and was employed successively at Mine La Motte in Missouri, at the Argentine Smelting and Refining Works, and as metallurgist of the Delaware Lead Co. in Philadelphia. When the last-named works were closed he went to Colorado, and after running the Rico smeltery for a short time went to Park City, Utah, to study the amalgamation and lixiviation of silver ores at the Ontario Mill, where Russell was then making his experiments. After a short time spent in charge of a smeltery in Mexico he was appointed assistant to Prof. Richards at the Massachusetts Institute of Technology in Boston; from there he went to the School of Mines of South Dakota as professor of metallurgy and assaying, where he remained until called back to the Massachusetts Institute of Technology to the professorship of metallurgy, which he now holds. Dr. Hofman has made numerous contributions to technical literature, his most important work being the admirable treatise on *The Metallurgy of Lead*. For his paper on the "Dry Assay of Tin Ores" the degree of Ph.D. was conferred on him by the University of Ohio. For the present volume he has reviewed progress in metallurgy of lead, continuing the series of articles begun in the first volume.

HOOPER, F. C., graduated from the Columbia School of Mines in 1890, and during the next two years was assistant engineer with the De Lamar Mining Co. of Idaho. In 1892 he was associated with his father and brother in the graphite industry in the Adirondacks, and later in the same year undertook a series of experiments for the concentration of garnet from hornblende and feldspar which resulted successfully. He is now manager of the mines and concentrating works of the North River Garnet Co. and is associated with Prof. Monroe in the installation of the new mining laboratories of Columbia University.

INGALLS, WALTER RENTON, a well-known mining engineer and metallurgist, is a graduate of the Massachusetts Institute of Technology. In 1886–90 he was engaged in mining at Leadville and elsewhere in Colorado. In 1890–92 he was assistant editor of the *Engineering and Mining Journal*, resigning that position to go to Mexico to open tin mines in the State of Durango. In 1893 and 1894 he visited professionally various mining districts in the United States, Canada, Belgium, Germany, and Poland, devoting himself especially to the metallurgy of zinc. He also acted as assistant editor of THE MINERAL INDUSTRY, Vols. I. and II. During a part of 1894 he had charge of the operations of the Illinois Phosphate Co. in Florida, and later in the year became connected with the Gold and Silver Extraction Co. of America, Ltd., as metallurgist. In 1895 he was manager of cyanide reduction works at Cripple Creek, Colo., and in 1896 of copper-matte smelting works in Durango, Mexico, returning to New York in 1897. For the present volume he has written on the progress in the metallurgy of gold and silver and zinc.

KELLER, HERMAN A., was born at Philadelphia in 1860. After studying in Germany he entered the University of Pennsylvania, where he graduated in 1881 and received an appointment to the instruction staff as assistant in mining and metallurgy. In 1882 he went to Leadville, becoming assayer and chemist for the Arkansas Valley Smelting Co., of which he was appointed superintendent in 1886. In 1888 he was metallurgist of the Globe Smelting and Refining Co at Denver, and in 1889 superintendent of the Philadelphia Smelting Works at

Pueblo. From the latter he returned to the Arkansas Valley Smelting Works again as superintendent. In 1891 he was appointed superintendent of the Parrot Smelting Works at Butte, Mont., which position he held until 1896. Leaving the Parrot works he reconstructed the smeltery of the Mountain Mines at Keswick, Cal., and since 1897 has been a consulting engineer in San Francisco, paying special attention to the metallurgy of lead and copper. Mr. Keller contributes to this volume the article on the "Copper Deposits of California."

KEMP, JAMES FURMAN, graduated from Amherst College in 1881, and from Columbia in 1884. He was private assistant to Prof. J. S. Newberry in 1884 and 1885, studied in Germany and traveled in 1885 and 1886, was instructor in geology at Cornell University from 1886 to 1888, assistant professor of geology and mineralogy from 1888 to 1891, adjunct professor of geology at Columbia from 1891 to 1892, and professor from 1892. Prof. Kemp has written much on subjects connected with economic geology and petrography, his most important work being the *Ore Deposits of the United States*. He has written for this volume the elaborate monograph on the "Occurrence of Telluride Ores."

KNIGHT, WILBUR C., born in Illinois in 1858, was educated at the University of Nebraska, studying geology and chemistry. After graduating he was Assistant Territorial Geologist of Wyoming for two years, and for six years was superintendent and general manager of mining corporations in Wyoming and Colorado. In 1893 he was called to the chair of mining in the School of Mines, University of Wyoming, and in 1894 was elected to the chair of geology and mining in the same school. In 1897 he was appointed State Geologist of Wyoming. He contributes to the present volume the article on the "Natural Soda Deposits of Wyoming."

LEVAT, DAVID, born in 1855, at Montpellier, France, studied in the Ecolé Polytechnique and the School of Paris, 1877, graduating as a mining engineer in 1880. After four years experience in the copper mines of Montecateni in Tuscany and in Greece and Algeria, he was appointed in 1885 general manager of the "Societé le Nickel" and remained till the end of 1889 at the head of the company's works. As consulting engineer of various companies, Mr. Levat has visited and reported upon mines in many parts of the world, especially New Caledonia, Australia, California, Algeria, and Tunis.

LEWIS, FREDERICK H., studied civil engineering at the University of Pennsylvania, graduating in 1878. He then became heliotroper on the United States Coast Survey, serving during the summer of 1878, and for three years afterward was assistant engineer of the construction department of the Pennsylvania Railroad Co.'s lines west of Pittsburg. From 1882 to 1885 he was superintendent of bridges and buildings of the Northern Pacific Railway, being situated at St. Paul, Minn., and was also in charge of the location of the company's terminal lines between St. Paul and Minneapolis. In 1885 and 1886 he was resident engineer of the South Pennsylvania Railroad, at Sideling Hill Tunnel, Fulton County, Pa. From 1886 to 1893 he was Eastern manager of the Pittsburg Testing Laboratory at Philadelphia. Since 1893 he has been practicing as consulting engineer at Philadelphia, and has also been consulting engineer for the firm of Booth, Garret & Blair, in their department of physical tests and inspection. He contributes to this volume the paper on "The Manufacture of Hydraulic Cement in the United States."

LOUIS, HENRY, was born in London in 1855. He first attended school in Bavaria, then in London, and in 1873 entered the Royal School of Mines, the associateship of which he obtained in 1876. He was then engaged for some time in Dr. Percy's private laboratory, making some of the researches for Dr. Percy's treatise on *Silver*. Thence he was sent by Sir William Siemens to Nova Scotia, for the Steel Company of Canada. Later he went to South America, where he was employed in gold mining in Colombia and Ecuador; from there to the Gold Coast, and next to South Africa, where he spent over three years in gold and diamond mining. He then spent three years managing and inspecting mines and exploring in the far East, including the Malay Peninsula (gold and tin), Siam, Tonkin, and Bengal. Upon his return to Europe he devoted himself to consulting work and the management of an iron mine in Spain. In 1895 he was appointed professor of mining in the Durham College of Science, Newcastle-upon-Tyne, and in 1896 received from the University of Durham the honorary degree of M. A. Mr. Louis is the author of a *Handbook on Gold Milling* (1894), and a revised and enlarged edition of Phillips' *Treatise on Ore Deposits* (1896). To this volume he contributes the articles on the "Metallurgy of Tin," "Tin Smelting in Tasmania," and the "Occurrence and Treatment of Platinum."

LUNGE, GEORGE, was born in 1839 at Breslau, Silesia, Prussia. He studied at the University of Breslau, where he received the degrees of M. A. and Ph. D., and then at Heidelberg under Bunsen and Kirchhoff. In 1864 he went to Great Britain, where he became chemist and later superintendent of the coal-tar and ammonia works at Wolverhampton. In 1865 Dr. Lunge took a position as chemist at the sulphuric acid and alkali works at South Shields, of which he later became superintendent and finally part owner, his connection with them lasting until 1876, when he left England to accept the post made vacant by the death of Emil Kopp at the Swiss Federal Polytechnic School at Zurich, where he is now professor of technological chemistry and dean of the faculty of chemistry. Dr. Lunge has contributed to technical literature some of its most important works. His *Coal Tar and Ammonia*, *The Manufacture of Sulphuric Acid and Alkali* and *The Alkali-Maker's Hand-Book* are standard works on these subjects. His papers on various subjects of pure and applied chemistry number several hundreds. To the present volume Dr. Lunge has contributed "The Manufacture of Sulphuric Acid Without Lead Chambers."

MCCHARLES, A., was born in Nova Scotia in 1844. He studied geology and traveled extensively through the mining regions of America from Mexico to British Columbia. During the last ten years he has lived in the Sudbury district, prospecting and dealing in mines, and has made a special study of the mineral deposits of that region.

OBALSKI, J., was born in France in 1852, and studied at the Ecole des Mines at Paris; after graduation he occupied several positions in connection with the mining industry in France and Spain, and visited various mining districts in those countries and Belgium and Portugal. In 1881 he was called by the government of the Province of Quebec to fill the position of mining engineer and inspector of mines, which post he still occupies. He has contributed to the present volume the article on "Chrome Ore Mining in Quebec."

PERRY, GEORGE W., was born at Granger, N. Y., in 1846 and graduated from St. Lawrence University in 1868. Having entered the Universalist ministry he was in charge of churches in various cities in Massachusetts until 1884, when he removed to Rutland, Vt. Having always had a deep interest in scientific matters, especially geology, he received the appointment as State Geologist of Vermont in 1886. In 1889 he founded the Rutland English and Classical Institute and continued in charge of this until 1895, when poor health compelled him to give up the work. He contributes to this volume the article on "Talc in Vermont."

RAYMOND, ROSSITER WORTHINGTON, Ph. D., is well known from one end of the world to the other as the highest authority in America on Mining Law, and he contributes to this volume an article on "Tunnel Rights." For many years Dr. Raymond was the editor of the *Engineering and Mining Journal* and was practically its founder. He was for several terms president of the American Institute of Mining Engineers, and has for many years been its most efficient secretary. Educated as a mining engineer at Freiberg, Saxony, in the days before mining schools were established in the United States, he quickly became one of the most prominent engineers in this country, and was influential in framing its early mining laws.

RICHARDS, ROBERT HALLOWELL, professor of mining and metallurgy at the Massachusetts Institute of Technology, was born in 1844 at Gardiner, Me. He graduated in 1868 from the Massachusetts Institute, being a member of its first class, and became assistant in chemistry in the corps of instruction, passing successively to the posts of instructor, assistant professor of chemistry, professor of mineralogy and assaying, professor of mining engineering, and in 1884 to his present professorship of mining and metallurgy. Under his administration the mining and metallurgical laboratory, which was the first of its kind in an educational institution, has been developed to a high degree of excellence, and has been a model for similar laboratories in other colleges. In addition to his professional duties Prof. Richards has been actively engaged as a consulting engineer in mining and metallurgical work, and has been the inventor of several ingenious devices, which have found extended use in practice. He has contributed many valuable papers to the technical press and to the transactions of various scientific societies. His most recent work on the principles of ore dressing is the admiration of the entire body of engineers engaged in that branch of metallurgy. To the several volumes of THE MINERAL INDUSTRY he has contributed the comprehensive reviews of "Progress in Ore Dressing."

SMYTH, C. H., JR., graduated from the Columbia School of Mines in 1888, and after studying under Prof. Rosenbusch at Heidelberg was appointed professor of geology and mineralogy in Hamilton College, at Clinton, N. Y., in 1891, which position he still holds. Prof. Smyth has been a frequent contributor to the proceedings of technical societies and to scientific journals and to the reports of the State Geologist of New York. He has written for the present volume the article on the "Talc Industry of New York."

SPIREK, VINCENTE, who contributes to this volume an article on the "Quicksilver Industry of Italy," is well known as a specialist in the metallurgy of that metal in Italy and Austria. He was first employed at Idria under Exeli, and from 1876 to 1890 was associated there with Cermak, being actively engaged in the remodeling of the works and the design of the well known Cermak-Spirek quicksilver furnace. He had previously had experience in the laboratory of the Imperial zinc works at Cilli. After service as an officer in the army in Bosnia and Herzegovina, he resigned his post of Oberhütteningenieur in the State Mines Direction to go to Monte Amiata, Italy, where during the last seven years he has rebuilt the two quicksilver works which are described in this volume.

ULKE, TITUS, was born in 1866, at Washington, D. C. In 1889 he graduated from the Royal School of Mines at Freiberg, Saxony, as metallurgical engineer. After spending some time in visiting the various mines and metallurgical works in Europe, Mr. Ulke returned to this country and was engaged as chemist to the Harney Peak Tin Co., in South Dakota. In 1891 he became assayer for the United Smelting Co., and afterward was engaged by the Anaconda Mining Co. as chemist at its electrolytic copper refining works. In 1893 Mr. Ulke acted as metallurgist to the Mines and Mining Department of the Chicago Columbian Fair, and was later employed at the Guggenheim works at Perth Amboy, N. J. As triangulator for the U. S. Geological Survey in 1897, he had charge of a party to survey the Montana timber reserves, but is at present again at work in his specialty—the electrolytic production of copper, nickel, gold and silver. Mr. Ulke has contributed articles on "Progress in the Electrolytic Refining of Nickel," and progress in the "Electrometallurgy of Copper," to the present volume.

WALKER, EDWARD, London representative of the *Engineering and Mining Journal* and the Scientific Publishing Co., was born in 1865 and educated at Owens College, Manchester, England. Mr. Walker has served on the editorial staff of *Industries*, London, and the *Engineering and Mining Journal*, New York; he now practices as a consulting engineer chiefly in connection with law cases and patents, and is in charge of the London offices of the *Engineering and Mining Journal* and the Scientific Publishing Co. Mr. Walker contributes to this volume the article on the "Hargreaves-Bird Electrolytic Soda Process."

WEIDIG, HENRY P., was born at Giessen, Germany, in 1860. He graduated from the Grossherzogliche Realschule at Giessen in 1877, and spent the next three years in practical work at the Justus Iron Works. From 1880 to 1883 he studied at Giessen, Freiberg and Berne, receiving his degree as Ph.D. at the last place. In 1884 he was engaged in traveling and private studies. In 1885 he became chemist with Martin Kalbfleisch Sons, Brooklyn, and in 1886–88 was analytical chemist for Powers & Weightman of Philadelphia. In 1888 he was appointed technical manager for the chemical works of Charles Cooper & Co. at Newark, N. J., and in 1897 became a member of that firm. He contributes to this volume the paper on the "American Chemical Industry."

That most important department of this work, its business and financial administration, has been, as in previous years, under the control of Mrs. Sophia Braeunlich, who is treasurer and business manager of the Scientific Publishing Co. and of the *Engineering and Mining Journal*, and who has been for many years on the staff of that paper. To her remarkable business ability is due in no small degree the success which has crowned this undertaking.

SOME OF THE CONTRIBUTORS TO THE MINERAL INDUSTRY.

J. OBALSKI.

GEO. W. PERRY.

ROSSITER W. RAYMOND.

R. H. RICHARDS.

VINCENTE SPIREK.

TITUS ULKE.

SOPHIA BRAEUNLICH.

INTRODUCTION.

THE total value of the mineral production of the United States in 1897 was $742,294,733, against $737,958,806 in 1896. Of these amounts $264,538,485 represented the value of the metals produced in 1897, against $252,959,625 in 1896, the remainder in each year representing the value of non-metallic substances. These figures generally give the value of each substance at the mine, quarry, or works; but in the case of the metals and certain other substances they are calculated at their average quotation in the principal markets.

Some of the crude material reported in the table is used in the production of manufactured substances which are also reported. A deduction of $50,521,235 covers these duplications and leaves the net value of the mineral and metallurgical production in 1897 as $691,773,498, against $691,109,649 in 1896. The totals given in the table are of values only, since it would be impossible to present a total of quantities made up of such various products. While the quantities produced in 1897 in nearly all cases exceeded those in the previous year, the unit values of most of the substances declined, so that the total value of the mineral and metal output was only slightly greater in 1897 than in 1896.

The production of so-called "mineral waters" is omitted, as heretofore, from these statistics. All waters contain more or less mineral matter, and, indeed, absolutely pure water is properly a mineral substance. If the production of "mineral waters" is to include all the water sold, then the supplies of our town and city water works should be counted, and they amount to over 1,000,000,000,000 gals., or say 45,000,000,000 short tons a year, sold at an aggregate value of about $200,000,000; while our consumption of ice, natural and artificial, should not be omitted. Moreover, the vast amount of water sold for irrigating, for power, or other purposes, and not included in the above should not be neglected, while a comparatively infinitesimal amount, largely artificial mixtures, varying from carbon dioxide to "ginger ale," is cited by some authorities as the production of "mineral waters."

This crystallized statement of the mineral industry of the United States again demonstrates the boundless resources of the country and the enterprise of our people, and again emphasizes the very important fact that notwithstanding the higher rates of wages paid in the United States the cost of production is in nearly all cases lower than in any other country. Perhaps it would be more proper to say because the rates of wages are two or three times as high in the United States as in European countries the cost of production per unit of product is less. This apparent paradox may be explained as follows: First, because the high rates of wages necessitate greater economy in the use of labor, and lead to the adoption of labor-saving machinery and appliances which increase the efficiency of labor far beyond the difference in the rates of wages. Secondly, the rates of wages being so high, as compared with the cost of living, a workman can by intelligent industry accumulate a competence; a sufficient number of workmen appreciate this fact and "set the pace" that others have to keep up. Labor is thus much more efficient in the United States than in any other part of the world, and directed by the great experience and technical skill gained in making this vast output, the undeniable fact that the cost of production, and especially the cost of the products of our highest-priced labor, is lower here than that of similar articles anywhere else in the world is fully accounted for. This brief statement covers momentous facts which with their far-reaching consequences will well repay the careful consideration of the captains of industry throughout the world.

The ability of the United States to produce at a lower cost than others those firm foundations of commercial supremacy, coal and iron, is again demonstrated in the instructive and suggestive statistics collected in these volumes. The technical skill and experience which are at once the cause and the outgrowth of this vast and cheap production of minerals and metals are recognized everywhere, and create a demand from all countries for that skill and the appliances with which it has worked in producing these astounding results. The advertising pages of this book, which contain the cards of the prominent professional men and the enumeration of the best appliances they used in the achievement of the great results here recorded, form an appropriate, and even necessary part of a work which is devoted to the statistics and technology of this great industry.

The statistics given, like all those in THE MINERAL INDUSTRY, have been obtained, as a rule, directly from the producers themselves, and the greatest care has been taken in their collection and arrangement. It is true that no statistics of this kind, representing so many and varied products and in a country so large as the United States, can be absolutely correct, but we believe that these figures are the fullest and the most nearly accurate that have ever been obtained. In making the comparisons the figures for 1896, as published in Vol. V. of THE MINERAL INDUSTRY, have been revised wherever necessary in accordance with our practice, which is to present the latest and best information. Those using these statistics should therefore commence with the latest volume, where the latest and most accurate figures are recorded.

We have given the production of the different articles in metric tons (or kilograms in the case of precious metals), as well as the customary measures, for the reason that the metric measures are those recognized and used by almost all of the civilized world, and are rapidly gaining recognition in the few remaining countries which have not yet tully adopted them. In our own country they are already legalized, with the prospect of their compulsory and exclusive use at an early date.

UNITED STATES MINERAL AND METAL PRODUCTION.

Number.	Products.	Customary Measures.	1896.				1897.			
			Quantity.		Value at Place of Production.		Quantity.		Value at Place of Production.	
			Customary Measures.	Metric Tons.	Totals.	Per M. Ton.	Customary Measures.	Metric Tons.	Totals.	Per M. Ton.
	NON-METALLIC.									
	Abrasives:									
1	Carborundum......	Sh. T.	595	539	$365,612	*j*$0.68	621	563	$153,812	*j*$0.27
2	Corundum..........	Sh. T.	250	227	35,000	154.19	230	209	32,200	154.07
3	Crushed steel......	Sh. T.	326	296	50,624	171.00	324	294	51,821	176.00
4	Diatom. earth.....	Sh. T.	3,540	3,211	34,200	10.65	3,000	2,721	30,400	11.17
5	Emery............	Sh. T.	1,550	1,406	108,500	77.17	1,500	1,361	105,000	77.15
6	Garnet...........	Sh. T.	2,440	2,214	85,400	38.57	2,260	2,050	79,100	38.57
7	Grindstones........	Sh. T.	31,301	28,396	294,338	10.36	36,651	33,250	366,675	11.00
8	Pumice	Sh. T.	*Nil.*	....	....	......	1,700	1,542	8,500	5.51
9	Quartz crystal.....	Sh. T.	6,000	5,432	16,500	3.04	6,000	5,432	16,500	3.04
10	Tripoli............	Sh. T.	1,405	1,275	4,823	3.79	1,631	1,479	5,475	3.70
11	Whetstones........	......	....	....	105,201	......	....	....	80,220	......
12	Alum...............	Sh. T.	14,090	12,782	422,700	33.07	15,456	14,021	463,680	33.07
13	Aluminum sulphate.	Sh. T.	42,240	38,319	1,056,000	27.56	46,355	42,053	1,158,875	27.56
14	Ammonium sulphate	Sh. T.	257	233	10,280	44.12	3,111	2,822	124,440	44.09
15	Asbestos............	Sh .T.	716	650	12,670	19.49	770	698	15,400	22.06
16	Asphalt.............	Sh .T.	20,414	18,519	362,590	19.58	27,397	24,854	486,620	19.58
17	Asphaltic limestone..	Sh. T.	5,000	4,536	55,000	12.12	2,390	2,168	11,450	5.28
18	Bitumin's sandstone.	Sh. T.	51,956	47,134	132,500	2.81	41,185	37,363	125,555	3.36
19	Barytes.............	Sh. T.	21,900	19,867	87,600	4.41	27,316	24,781	109,264	4.41
20	Bauxite.............	L. T..	17,096	17,369	42,740	2.46	20,590	20,919	41,180	1.97
21	Borax (crude)........	Sh. T.	13,320	12,084	266,400	22.04	19,400	17,509	388,000	22.05
22	Bromine.............	Lb...	559,285	253	143,074	*j*0.57	487,149	221	136,402	*j*0.62
23	Calcium carbide.....	Sh. T.	860	780	48,000	61.54	1,925	1,746	134,750	77.17
24	Cement, nat. hydraul.	Bbls*a*	7,407,311	1,007,980	4,385,962	4.35	7,781,377	1,058,888	4,127,124	3.90
25	Cement, Portland....	Bbls*b*	1,577,283	286,181	2,502,479	8.74	2,272,971	412,405	3,521,489	8.54
26	Cement, slag........	Bbls*c*	*Nil.*	....	....	......	40,000	6,350	60,000	9.45
27	Chrome ore..........	L. T..	702	713	7,775	10.90	50	51	550	10.78
28	Clay products.......	Sh. T.	....	....	*f*65,000,000	......	....	....	56,121,101	......
29	Coal, anthracite......	Sh. T.	48,133,930	42,667,101	86,682,794	2.03	52,645,133	47,759,665	85,857,717	1.79
30	Coal, bituminous	Sh. T.	139,468,659	126,525,967	113,401,602	0.89	147,557,599	133,864,599	120,505,982	0.89
31	Coal, cannel.........	Sh. T.	54,661	49,588	146,491	2.95	56,511	51,267	153,145	2.98
32	Coke................	Sh. T.	10,369,015	9,406,770	17,311,828	1.84	12,742,340	11,563,673	23,367,879	2.02
33	Cobalt oxide.........	Lb. .	12,825	*j*5,817	17,814	*j*2.98	19,300	*j*8,754	32,810	*j* 3.75
34	Copperas	Sh. T.	11,170	10,133	52,662	5.19	11,924	10,818	56,565	5.23
35	Copper sulphate.....	Lb...	48,732,840	22,150	1,953,225	88.18	51,012,945	23,139	2,040,518	88.19
36	Feldspar............	L. T..	24,907	25,305	124,251	4.91	20,900	21,234	113,778	5.36
37	Fluorspar............	Sh. T.	6,000	5,432	48,000	8.83	9,025	8,187	74,456	9.09
38	Fuller's earth........	Sh. T.	11,326	10,275	68,476	6.66	17,049	15,467	91,684	5.93
39	Grahamite...........	Sh. T.	1,282	1,163	38,460	33.07	1,756	1,592	52,680	33.09
40	Graphite, crystalline.	Lb...	405,006	*j*183,709	18,225	*j*.10	993,138	*j*450,487	44,691	*j*.10
41	Graphite, amorphous	Sh. T.	574	520	3,850	7.40	1,200	1,090	11,400	10.45
42	Gypsum..............	Sh. T.	195,553	177,405	583,136	3.29	223,061	202,360	711,952	3.52
43	Iron ore.............	L. T..	16,000,056	16,256,057	31,200,889	1.93	18,316,967	18,610,038	31,138,844	1.67
44	Litharge.............	Sh. T.	6,500	5,897	540,000	91.57	9,900	8,981	899,100	100.11
45	Magnesite	Sh. T.	2,067	1,875	9,715	5.12	1,907	1,730	7,628	4.41
46	Manganese ore	L. T..	162,526	165,126	339,083	2.05	156,787	159,296	332,700	2.09
47	Mica, ground.......	Sh. T.	570	517	9,687	18.73	2,692	2,442	38,218	15.65
48	Mica, sheet..........	Lb...	17,630	*j*7,997	12,528	*j*1.57	92,335	*j*41,883	45,615	*j* 1.09
49	Mineral wool.........	Sh. T.	5,853	5,309	61,614	11.60	5,667	5,141	45,494	8.81
50	Monazite.............	Lb...	17,500	8	875	109.37	40,000	18	2,000	111.11
51	Natural gas..........	......	....	....	10,000,000	......	....	....	10,000,000	......
52	Paints, metallic......	Sh. T.	31,865	28,908	342,167	11.15	36,293	32,925	370,594	11.26
53	Paints, ocher, etc....	Sh. T.	17,835	16,179	178,793	11.05	11,151	10,116	110,165	10.89
54	Paints, venetian red.	Sh. T.	5,998	5,309	93,586	17.62	4,596	4,169	55,690	10.96
55	Paints, white, red ld.	Sh. T.	95,955	87,049	7,868,310	90.39	103,235	93,654	9,291,150	99.21
56	Paints, zinc oxide...	Sh. T.	15,863	14,391	1,189,725	82.67	26,262	23,825	2,100,960	88.18
57	Petroleum (crude)...	Bbls*d*	55,354,795	7,730.425	65,753,206	8.50	56,985,643	7,972.579	44,804,962	5.62
58	Phosphate rock.....	L. T..	937,372	952,370	2,812,116	2.95	906,080	920,577	2,718,240	2.95
59	Precious stones......	......	....	....	200,000	......	....	....	101,000	......
60	Pyrites	L. T..	109,282	111,030	292,626	2.63	128,468	130,523	379,699	2.83
61	Salt.................	Bbls *e*	15,707,908	1,995,017	5,328,250	2.67	13,153,524	1,670,592	4,859,864	2.91
62	Silica, sand & quartz.	L. T..	720,399	731,925	1,076,038	1.47	750,000	762,000	1,125,000	1.48
63	Slate, roofing	Sq'es.	699,100	....	2,260,862	*n*3.23	895,372	....	2,695,580	*n*3.01
64	Slate, manufactures.	......	....	....	467,578	......	....	....	547,645	......
65	Soapstone............	Sh. T.	14,350	13,018	143,500	11.02	18,974	17,213	189,740	10.91
66	Soda, natural........	Sh. T.	3,000	2,722	65,000	23.88	5,000	4,536	110,000	24.25
67	Soda, manufactured.	M. T..	....	157,475	3,621,925	23.00	....	277,072	5,774,656	20.84
68	Stone, for building..	......	....	....	30,599,804	......	....	....	30,000,000	......
69	Stone, limestone(flux)	L. T..	3,794,175	3,854,882	1,669,437	0.43	4,247,688	4,315,651	1,868,983	0.43
70	Strontium sulphate..	Sh. T.	*Nil.*	....	....	......	40	36	200	5.55
71	Sulphur..............	L. T..	3,800	3,861	72,200	18.70	1,690	1,717	34,814	20.27
72	Sulphuric acid.......	Sh. T.	1,019,501	924,885	17,331,517	18.74	1,128,741	1,023,987	21,446,079	19.19
73	Talc, common........	Sh. T.	7,098	6,439	63,585	9.87	9,563	8,675	82,795	9.54
74	Talc, fibrous.........	Sh. T.	51,816	47,007	256,080	5.45	58,836	53,376	288,185	5.39
75	Uranium ore.........	Sh. T.	*Nil.*	....	....	......	17	15	9,010	600.66
76	Zinc ore, exported...	L. T..	2,324	2,361	47,408	20.08	9,251	9,399	211,350	22.48
77	Est. prod. unspecified	......	....	....	5,000,000	......	....	....	5,000,000	......
	Total non-metals..	......	....	....	484,999,181	......	....	....	477,756,248	......

UNITED STATES MINERAL AND METAL PRODUCTION—*Continued.*

Number.	Products.	Customary Measures.	1896.				1897.			
			Quantity.		Value at Place of Production.		Quantity.		Value at Place of Production.	
			Customary Measures.	Metric Tons.	Totals.	Per M. Ton.	Customary Measures.	Metric Tons.	Totals.	Per M. Ton.
	Metals.									
78	Aluminum...........	Lb...	1,300,000	*j*589,676	$520,000	*j*$0.88	4,000,000	*j*1,814,400	$1,400,000	*j*$0.77
79	Antimony...........	Lb...	1,226,000	556	84,717	152.37	1,500,000	680	107,250	157.72
80	Copper (*m*)...........	Lb...	479,806,183	217,639	51,003,397	234.35	510,190,719	231,421	56,325,055	243.39
81	Gold...........	Oz.. *f*	2,558,433	*j*79,576	52,886,209	*j*664.60	2,864.576	*j*89,092	59,210,795	664.60
82	Iron, pig...........	L. T..	8,623,127	8,761,097	91,577,610	10.45	9,652,680	9,807,123	92,677,812	9.45
83	Iridium...........	Oz...	....	....	....	......	20.25	....	606	......
84	Lead, value at N. Y..	Sh. T.	174,692	158,479	10,411,648	54.07	197,718	179,366	11,784,098	65.73
85	Nickel...........	Lb...	17,170	*j*7,788	4,464	*j*0.57	33,700	*j*15,286	11,668	*j*0.76
86	Platinum...........	Oz.. *f*	200	*j*6.21	2,800	450.89	200	*j*6.21	8,000	482.39
87	Quicksilver...........	Flks *g*	29,868	1,036	1,104,997	1066.58	26,079	965	991,002	1026.94
88	Silver, comm'l value.	Oz.. *f*	58,488,810	*j*1,819,208	39,245,992	*j*21.58	56,457,292	*j*1,756,004	33,755,815	19.22
89	Zinc...........	Sh. T.	77,637	70,432	6,117,796	86.86	100,387	91,070	8,271,889	90.83
	Total metals........	......	....	....	252,959,625	......	....	....	264,538,485	......
	Grand totals.....	......	....	....	737,958,806	......	....	....	742,294,733	......

(*a*) Barrels of 300 lb.; (*b*) 400 lb.; (*c*) 350 lb.; (*d*) 42 gal.; (*e*) 280 lb. (*f*) Troy ounces. (*g*) Flasks of 76½ lb. (*h*) Bituminous coal includes brown coal and lignite. The anthracite production is the total for Pennsylvania, Arkansas, and Colorado. (*i*) Estimated. (*j*) Kilograms or per kilogram. (*m*) The value of the copper production is calculated at 0.25c. per lb. less than the average price of Lake copper at New York. (*n*) Value per square. (*p*) Value per cubic foot.

Abbreviations: Sh. T., short tons (2,000 lb.); L. T., long tons (2,240 lb.); M. T., metric tons (2204.6 lb.); Sq'es, squares (100 sq. ft., lapped and laid).

In the preceding table the statistics are limited strictly to our domestic production. In the cases of gold, silver, copper, lead, and nickel the representation is entirely inadequate, since large quantities of those metals are obtained from foreign ores and base bullion (chiefly from Mexico and Canada), which are smelted or refined here. These amounts are given in the following table:

METALS PRODUCED FROM FOREIGN ORES AND BULLION NOT INCLUDED IN THE PRECEDING TABLE.

Metals.	Customary Measure.	1896.			1897.		
		Quantities.		Values.	Quantities.		Values.
		Customary Measure.	Metric Tons.		Customary Measure.	Metric Tons.	
Copper............	Pounds....	27,608,590	12,323.000	$3,003,273	26,938,254	12,219,112	$2,973,983
Gold............	Troy ozs..	409,315	12.731	8,461,033	584,983	18.194	12,091,599
Lead............	Short tons.	80,159	72,266.000	4,769,780	92,117	83,568.000	6,595,577
Nickel............	Pounds....	3,697,089	1,677.000	1,220,022	4,099,390	1,859.000	1,419,209
Silver............	Troy ozs..	33,183,529	1,030.569	22,232,598	40,218,776	1,250.934	24,046,806
Total values...	....	....	....	$39,686,696	....	....	$47,127,174

We have not included in the above table the iron smelted from foreign ores, which is small in actual amount and insignificant in comparison with the total output; nor have we included the manganese in foreign ores which enters into the composition of the spiegeleisen and ferro-manganese that is made here.

METALS.

Aluminum.—The production in 1897 was 4,000,000 lb. ($1,400,000) against 1,300,000 ($520,000) in the previous year. The increase was due partly to the reduction in price and partly to a greatly increased export trade.

Antimony.—The output increased from 1,226,000 lb. ($84,717) to 1,500,000 ($107,250). This was produced chiefly from imported ores, although the production of domestic ores increased from 150 to 500 tons.

Copper.—The production increased from 214,199 long tons in 1896 to 227,763 long tons in 1897. The increase occurred chiefly in Arizona and Montana.

Gold.—The production in the United States increased from 2,558,433 troy oz. ($52,886,209) in 1896 to 2,864,576 ($59,210,795) in 1897. The more part of the increase was due to Colorado, which State is credited with an output of $19,579,637 and now leads all the others in point of gold production. The Cripple Creek mines furnish upward of 50% of the total yield of the State. Contrary to expectations at the beginning of the year there was a falling off in production both in California and in Utah. In the former State the camps of Nevada County fell far below their record of the previous year, while in Utah the production of the Mercur district was only a trifle more than in 1896, the new large mills not having been completed in time to add anything of consequence to the total. Although the increase in the gold production of the United States in 1897 was very large there is much probability that there will be a further increase in 1898. American refiners turned out 584,983 troy oz. ($12,091,599) of fine gold from ores and bullion imported chiefly from Canada and Mexico, making a total addition of $71,302,394 to the domestic supply of gold during the year.

Iron.—The make of pig iron in the United States increased from 8,623,127 long tons ($91,577,610) in 1896 to 9,652,680 ($92,677,312) in 1897. The production of iron ore was 16,000,056 long tons ($31,200,889) in 1896 and 18,316,967 ($31,138,844) in 1897. Upward of 66% of the production of iron ore was from the Lake Superior region. The production of pig iron in 1897 was the largest for any single year in the history of the United States.

Lead.—The production of lead from ores mined in the United States increased from 174,692 short tons ($10,411,643) to 197,718 ($11,784,093). Beside this there was a large amount of lead ore and silver-lead imported from British Columbia and Mexico and smelted and refined in the United States, part of it being re-exported. The increase in the domestic lead production in 1897 was due chiefly to southeast and southwest Missouri and the Cœur d'Alene district of Idaho. The production of lead in Colorado was 40,400 tons against 41,009 in the previous year. The production of the Cœur d'Alene mines increased from 37,250 short tons to 55,750. The output of Montana was 12,897 short tons against 11,260 short tons in the previous year. The production in southeast and southwest Missouri in 1897 was 45,710 short tons.

Nickel.—For several years, since the Lancaster Gap mine was closed, the only nickel produced in the United States from domestic ores has been a small amount derived as a by-product from lead smelters' matte from southeast Missouri. The output of nickel from this source was 33,700 lb. ($11,668) in 1897 against 17,170 ($4,464) in the previous year. There is a large production of nickel oxide and nickel salts in the United States from nickel-copper matte imported from Ontario.

Platinum.—A small amount of platinum is obtained annually in the United States as a by-product in the refining of certain gold bullion from California. We have estimated this at 200 troy oz. in 1897, the same amount as in the previous year. The Director of the Mint reports to us also the production of 20.25 troy oz. of iridium.

Quicksilver.—The output fell off from 29,863 flasks ($1,104,997) in 1896 to 26,079 ($991,002) in 1897. There have been no new discoveries of late years in the United States which have come to anything, and the entire production continues to be from California.

Silver.—The domestic production decreased from 58,488,810 troy oz. in 1896 to 56,457,292 troy oz. in 1897. This large decrease is attributable to the heavy decline in the value of silver, which compelled a good many mines (whose ores contained their chief value in silver) to close down, especially such mines as the Ontario and Daly, of Park City, Utah. The falling off in production would have been much greater had it not been for the comparatively high prices for copper and lead which stimulated the production of those metals, and, consequently, the silver carried with them. There was, therefore, a large increase in silver production from Butte, Mont., and the Cœnr d'Alene. Colorado and Utah showed a large falling off in production, while there was an increase from Montana and Idaho. Besides the silver produced from ores mined in the United States, American refiners turned out 40,318,776 troy oz. of silver derived from ores, bullion, and silver-lead imported from Canada and Mexico. The average price of silver in New York was 59.79c. per fine oz. in 1897 against 67.1c. in 1896.

Zinc.—The production increased from 77,637 short tons ($6,117,796) in 1896 to 100,387 ($8,271,889) in 1897. This increase, which took place especially in the western districts, was brought about by the high price established for the metal by a combination of part of the producers and the establishment of several new works, and enlargement of the capacity of others, outside of the combination. The production in 1897, which was thus increased so heavily, far outstripped consumption, and as a result the combination was obliged to market a good deal of its spelter abroad at comparatively low prices.

ORES AND NON-METALLIC SUBSTANCES.

Abrasives.—Under this caption are included carborundum, corundum, crushed steel, diatomaceous earth, emery, garnet, grindstones, millstones, pumice, quartz crystal, tripoli, and whetstones. The production of carborundum increased from 595 short tons ($365,612) to 621 short tons ($153,812). The decrease in value was due to a heavy reduction in price by the sole concern producing this substance. The production of corundum declined from 250 short tons ($35,000) to 230 short tons ($32,200). The make of crushed steel was 326 short tons ($50,624) in 1896 and 324 short tons ($51,824) in 1897. The output of diatomaceous earth fell off from 3,540 short tons ($34,200) to 3,000 short tons ($30,400). This substance is produced in Maryland, Virginia, Nevada, and California. Emery declined from 1,550 short tons ($108,500) to 1,500 ($105,000). In each year there was only a production in Massachusetts and New York. The production of garnet declined from 2,440 short tons ($85,400) to 2,260 ($79,100). The output was made in Pennsylvania, Connecticut, and the Adirondacks. Grindstones increased from 31,301 short tons ($294,338) to 36,651 ($366,675). For the first time in the United States a production of pumice was reported, 1,700 short tons having been obtained from Utah and Nebraska. The output of quartz crystal for wood finishing was 6,000 short tons ($16,500), the same amount as in the previous year. The production of tripoli, most of it from Missouri, increased from 1,405 short tons ($4,823) to 1,631 short tons ($5,475). The manufacture of whetstones, oilstones, and scythestones decreased from

$105,201 to $80,220. It is to be observed that there was generally a falling off in the production of abrasives in 1897. The conditions governing this industry are being changed considerably by the growing use of carborundum, and are likely to be further changed by the new discovery of corundum in Ontario.

Alum and Aluminum Sulphate.—The production of the former increased from 14,090 short tons to 15,456; of the latter, from 42,240 to 46,355. In each year the more part of the production was made from American bauxite.

Ammonium Sulphate.—There was a production of ammoniacal liquor recovered as a by-product in the manufacture of coke, which was equivalent to 257 short tons of ammonium sulphate in 1896 and 3,111 short tons in 1897. The recovery of this product is a comparatively new feature in the coke industry of the United States, and promises to increase a good deal in importance.

Asbestos.—The production increased from 716 short tons ($12,670) to 770 ($15,400), nearly the whole being obtained from Georgia.

Asphaltum.—The production of asphaltum proper, solid and liquid, increased from 20,414 short tons ($362,590) to 27,397 ($486,620), the entire output being derived each year from California. Owing to the closing of the mines in Texas the production of asphaltic limestone decreased from 5,000 short tons ($55,000) to 2,390 short tons ($11,450), the output in 1897 having been derived from Utah and the Indian Territory. Bituminous sandstone decreased from 51,956 short tons ($132,500) to 41,185 ($125,555). About 2,000 tons were produced in Kentucky in 1897 and the remainder came from California. Grahamite, or gilsonite, increased from 1,282 short tons ($38,460) to 1,756 ($52,680), the whole being the product of Utah.

Barytes.—The production, which is derived chiefly from Missouri, Virginia, and North Carolina, increased from 21,900 short tons ($87,600) to 27,316 ($109,264). The values are given for the crude mineral before grinding.

Bauxite.—The output, which is obtained entirely from Alabama and Georgia, increased from 17,096 long tons ($42,740) to 20,590 ($41,180). Last year was distinguished by the beginning of an export trade in this mineral, 2,537 long tons having been shipped abroad.

Borax.—The production of crude borax increased from 13,320 short tons in 1896 to 19,400 in 1897, by far the more part each year being colemanite from Southern California. The production of refined borax, including boracic acid, was 15,258,014 lb. in 1896 and 21,422,000 lb. in 1897. The average price of borax was 5c. per lb. in 1896 and 6c. in 1897.

Bromine.—The production of liquid bromine and bromine in the form of potassium bromide decreased from 559,285 lb. ($143,074) to 487,149 lb. ($136,402) in 1897. Of the output in the latter year 132,200 lb. were in the form of potassium bromide.

Calcium Carbide.—The production increased from 860 short tons ($48,000) to 1,925 ($134,750). There were four works engaged in the production in 1897. A considerable part of the output was exported.

Cement.—The production of natural cement increased from 7,407,311 bbl. to 7,781,377. The production of Portland cement rose from 1,577,283 bbl. to 2,272,971. The manufacture of slag cement was commenced in 1897 and an output of 40,000 bbl. was made. The barrel of natural cement, slag cement, and Portland cement is calculated at 300, 350, and 400 lb. respectively.

Chrome Ore.—This industry, which for many years has been carried on only in California, has come almost to a standstill, the production in 1897 having been only 50 long tons ($550) against 702 ($7,775) in the previous year. California mines cannot stand the high freight rate to market.

Clay.—The value of brick and other clay products made in 1897 was $56,121,101, against $65,000,000 (estimated) in the previous year.

Coal and Coke.—The production of anthracite coal in 1897 was 52,645,133 short tons, against 48,133,930 tons in the previous year. The output of bituminous coal increased from 139,468,659 short tons in 1896 to 147,557,980 short tons in 1897. There was a production of 56,571 short tons of cannel coal in 1897, entirely from Kentucky, against 54,661 short tons in 1896. The output of coke in 1897 amounted to 12,742,340 short tons, against 10,369,015 short tons in 1896. The average value of the bituminous coal was the same as in 1896, viz., 81c. per short ton, a figure lower than in any other country in the world, notwithstanding the high price of coal in some of the Western States.

Cobalt Oxide.—The production increased from 12,825 lb. ($17,314) to 19,300 lb. ($32,810). This was derived entirely from matte from Missouri.

Copperas.—There was little change in the business in this substance in 1897 which is entirely derived as a by-product from the pickling liquors of iron and steel works. The make was 11,170 short tons ($52,662) in 1896 and 11,924 short tons ($56,565) in 1897. This does not include copperas used for the preparation of venetian red.

Copper Sulphate.—The production in 1896 was 48,732,840 lb. ($1,953,225) and in 1897 51,012,945 lb. ($2,040,518). This was chiefly produced as a by-product by the gold and silver and copper refiners.

Feldspar.—The production was 24,907 long tons ($124,251) in 1896 and 20,900 tons (113,773) in 1897. This material is consumed entirely by potters.

Fluorspar.—The production increased from 6,000 short tons ($48,000) to 9,025 ($74,456). The entire amount came from southern Illinois and the opposite side of the Ohio River in Kentucky.

Fuller's Earth.—There was a production of 17,049 short tons ($91,634) in 1897 against 11,326 ($68,476) in 1896, most of which each year was mined in the vicinity of Quincy, Fla.

Graphite.—The production of crystalline graphite, practically all of it from Ticonderoga, N. Y., increased from 405,006 lb. ($18,225) to 993,138 ($44,691). The output of amorphous graphite, all of it from Rhode Island, increased from 574 short tons ($3,850) to 1,200 short tons ($11,400).

Gypsum.—The production increased from 195,553 short tons ($583,136) in 1896 to 223,061 ($711,952).

Litharge.—There was a manufacture of 6,500 short tons ($540,000) in 1896 and 9,990 ($899,100) in 1897. Practically all of this substance is made by the oxidation of refined lead.

Magnesite.—Of this mineral, which is produced only in California, there was an output of 2,067 short tons in 1896 and 1,907 short tons ($7,628) in 1897. It was used chiefly as calcined magnesia in the manufacture of wood pulp paper.

Manganese Ore.—The production decreased from 162,526 long tons ($339,083) in 1896 to 156,787 ($332,700) in 1897. These figures include the production of high-grade manganese ores, the franklinite residuum of New Jersey and the low grade manganiferous iron ores of Lake Superior, the last forming the largest part of the total. The manganiferous iron ore of Colorado, which is used as flux by the lead smelters, is not included.

Mica.—The production of ground mica increased from 570 short tons ($9,887) in 1896 to 2,692 short tons ($38,218) in 1897. The output of sheet mica increased from 17,630 lb. ($12,528) to 92,335 lb. ($45,615). The output of both ground and sheet mica was obtained chiefly from New Hampshire and North Carolina.

Mineral Paints.—The output of natural iron oxide (metallic paint) was 31,865 short tons ($342,167) in 1896 and 36,293 ($370,594) in 1897; venetian and indian red 5,998 ($93,586) in 1896 and 4,596 ($55,690) in 1897. The output of ocher, umber, and sienna decreased from 17,835 short tons ($178,793) to 11,151 ($110,165). White and red lead increased from 95,955 short tons ($7,868,310) to 103,235 ($9,291,150). This was made chiefly by the corrosion of pig lead, but there were two producers who made white lead direct from ores. The production of zinc white increased from 15,863 short tons ($1,189,725) to 26,262 ($2,100,960).

Mineral Wool.—The production decreased from 5,853 short tons ($61,614) in 1896 to 5,667 short tons ($45,495) in 1897.

Monazite.—There was a production of 40,000 lb. ($2,000), all from one place in North Carolina, against 17,500 ($875) in the previous year. Owing to the competition of the Brazilian monazite the industry in the United States is practically defunct.

Natural Gas.—The value of the consumption in 1897 is estimated at $10,000,000, the same as in 1896.

Petroleum.—The production of crude petroleum increased from 55,254,795 bbl. ($65,753,206) to 56,985,643 bbl. ($44,804,962). There was a considerable increase in the output of the Appalachian field and in California, while the yield of the Lima field showed a small decrease. A new discovery of petroleum was made in the vicinity of Corsicana, Texas. The average price of pipe-line certificates was 78⅝c. per bbl. in 1897 against $1.19 in the previous year.

Phosphate Rock.—The production decreased from 937,372 long tons ($2,812,116) to 906,080 ($2,718,240). The production of Tennessee more than doubled, but this was more than offset by the large decrease in the output of Florida and South Carolina, the conditions continuing unfavorable in those States.

Precious Stones.—The value of the production was estimated at $200,000 in 1896 and $101,000 in 1897. New finds of turquoise were reported in Nevada while some remarkable quartz crystals were discovered in California.

Pyrites.—The high price of brimstone induced several acid manufacturers to substitute pyrites and this led to an increased production. The output was 109,282 long tons ($292,626) in 1896 and 128,468 long tons ($379,699) in 1897. In both years the mines of Virginia were the largest producers.

Salt.—The salt industry of the United States experienced a very unfavorable year in 1897, and the production was only 13,153,524 bbl. ($4,859,364) against 15,807,908 bbl. ($5,328,250) in the previous year. The falling off would have been much larger if it had not been for the increased consumption of salt in the manufacture of alkali. New York salt makers suffered most severely, but there was also a decrease in the output of Kansas and the Ohio valley, while Michigan showed only a small increase.

Silica, Sand, and Quartz.—The production is estimated at 750,000 long tons ($1,125,000) against 720,399 ($1,076,038) in the previous year.

Slate.—The output of roofing slate increased from 699,100 squares ($2,260,862) in 1896 to 895,372 ($2,695,580) in 1897. The New York-Vermont and Pennsylvania districts each showed large increases. The most noteworthy feature of the year in this industry was the remarkable growth of the export trade. The value of slate manufactures increased from $467,578 to $547,645.

Soda.—The output of alkali reduced to a basis of 58% soda ash was 277,072 metric tons ($5,774,656) against 157,475 ($3,621,925) in the previous year. The rapid growth of this industry in the United States has a good deal disturbed the English alkali trade, and there is reason to believe that before long we shall be supplying our entire domestic consumption. There was a production of 3,000 short tons ($65,000) of natural soda in California in 1896 and 5,000 ($110,000) in 1897.

Stone.—The amount of limestone used for iron flux was 3,794,175 long tons ($1,669,437) in 1896 and 4,247,688 long tons ($1,868,983) in 1897. The output of building stone is estimated at $30,000,000 in 1897 against $30,599,804 in 1896.

Strontium Sulphate.—A lot of 40 tons was mined on an island in Lake Erie, near Put-in-Bay, O., for experimental purposes.

Sulphur.—There was a production of 1,690 long tons ($34,814) in 1897 against 3,800 ($72,200) in the previous year. This was partially the product of Utah and partially of Louisiana.

Sulphuric Acid.—The production increased from 1,019,501 short tons ($17,331,517) in 1896 to 1,128,741 ($21,446,079) in 1897. These figures are reduced to a common basis of 66° B. The amount of acid made from pyrites was 591,401 short tons against 470,044 in the previous year. There was a small output of acid as a by-product from blende roasting by two zinc works in Illinois.

Talc and Soapstone.—The output of fibrous talc, which is almost entirely ground for use in paper making, increased from 51,816 short tons ($256,080) to 58,836 ($288,185). This substance is produced only in St. Lawrence County, N. Y. The output of common talc, chiefly ground to powder, increased from 7,098 short tons ($63,585) to 9,563 ($82,795). This was produced in North Carolina, Georgia, Pennsylvania, and Vermont. The amount of soapstone quarried and sawed into slabs increased from 14,350 short tons, valued nominally at $10 per ton in 1896 to 18,974 short tons in 1897. This material was derived from New Hampshire, Vermont, and Virginia, chiefly from the last.

Uranium Ore.—A lot of 17 tons of pitchblende valued at $9,010 was shipped from Colorado, chiefly to France. This was largely an accumulation of previous years. The mineral is found in two mines near Black Hawk, Colo.

Zinc Ore.—The exports of zinc ore from the United States to Europe were 9,251 short tons ($211,350) in 1897 against 2,324 ($47,408) in the previous year. The more part of the exports in 1897 were zincite-willemite concentrates from New Jersey, but a considerable amount of blende was shipped from Missouri.

ABRASIVES.*

UNDER this caption are included corundum and emery, garnet, quartz, carborundum, diatomaceous earth, tripoli, pumice, rouge, crushed steel, and abrasive stones (whetstone, buhrstone, millstone, etc.). Some of these substances have other uses, especially quartz and diatomaceous earth, which are of more importance than their use as abrasives, but for convenience they will be considered in this group.

PRODUCTION OF ABRASIVES IN THE UNITED STATES.

Substances.	1895.			1896.			1897.		
	Tons of 2,000 lbs.	Value.		Tons of 2,000 lbs.	Value.		Tons of 2,000 lbs.	Value.	
		Total.	Per Ton		Total.	Per Ton		Total.	Per Ton
Carborundum	113	$67,800	$600	595	$365,612	$614.50	621	$153,812	$247.68
Corundum	385	53,900	140	250	35,000	140.00	230	32,200	140.00
Crushed steel	336	53,864	160	326	50,624	155.00	324	51,824	160.00
Diatomaceous earth	(*b*)	....	....	3,540	34,200	96.61	3,000	30,400	10.13
Emery	1,700	119,000	70	1,550	108,500	70.00	1,500	105,000	70.00
Garnet	2,065	93,850	45	2,440	85,400	35.00	2.260	79,100	35.00
Pumice	*Nil.*	....	....	*Nil.*	....	....	1,700	8,500	5.00
Quartz crystal	9,000	27,000	3	6,000	16,500	2.75	6,000	16,500	2.75
Tripoli	*a*1,783	26,049	15	1,405	4,823	3.43	1,631	5.475	3.35
Totals	15,382	440,963	29	16,106	700,659	43.53	17.266	482,811	27.97

(*a*) Includes diatomaceous earth. (*b*) Included with tripoli.

The above table does not exactly indicate the consumption of abrasives in the United States, since a considerable part of the tripoli produced (with which is included infusorial or diatomaceous earth) is used for other purposes, such as non-heat-conducting covering for steam pipes and boilers; in Europe a good deal of this substance is employed in the manufacture of dynamite, but very little is consumed for this purpose in the United States. It does not include, on the other hand, the immense quantity of sand which is used in the manufacture of sand-paper, and as the abrasive agent in sand-blast apparatus for cleaning castings, iron structures, etc.

The United States imports neither corundum nor garnet, but receives a good deal of emery from Turkey and Greece. The amount and value of these importations are found in the following table:

---

* For further data relating to infusorial earth and tripoli and the manufacture of carborundum and corundum, emery, crushed steel, rouge and garnet, refer to previous volumes of THE MINERAL INDUSTRY, especially to Vols. II. and III.

IMPORTS OF EMERY INTO THE UNITED STATES.

Year.	Grains.		Ore or Rock.		Other M'f'es.	Total Value.	Year.	Grains.		Ore or Rock.		Other M'f'es.	Total Value.
	Pounds	Value.	Long Tons.	Value.	Value.			Pounds	Value.	Long Tons.	Value.	Value.	
1890.	534,968	$20,382	3,367	$97,939	$5,046	$123,367	1894..	597,718	$18,645	2,304	$51,487	$1,847	$71,979
1891..	90,658	3,729	2,530	67,573	....	71,302	1895..	678,761	25,066	6,308	80,386	27,586	133,038
1892..	566,448	22,586	5,280	95,625	2,412	120,623	1896..	751,464	26,520	6,289	119,667	1,971	148,158
1893..	516,958	20,073	5,066	103,875	3,819	127,767	1897..	520,095	20,022	5,209	107,649	2,211	129,882

CARBORUNDUM.

By E. G. ACHESON.

THE production of carborundum in the United States (made entirely by one works as heretofore) was 1,242,929 lb., against 1,190,000 lb. in 1896. Of the production in 1897 about 25% was in the form of powder, and the remainder in grains ranging from No. 8 to No. 220. The present price of the powder is 8@10c. per lb., and of the grain 12@15c. The great falling off in the value of the carborundum product from 1896 to 1897 is explained as follows: The product in 1896 was reckoned at the list price, which was in fact the selling price in the early part of that year, although it was very much shaded toward the end. The value of the production in 1897 is calculated at the actual selling price at the end of the year. The discrepancy is increased, moreover, by the fact that a large part of the production in 1896 was carried over to 1897, and sold at a lower price than was reckoned in THE MINERAL INDUSTRY, Vol. V. At the end of 1897 stocks had been much reduced and carborundum was being marketed about as fast as produced, so that it was expected that accumulated stock of the material would be very small by April, 1898.

There was in 1897 a continued improvement in the introduction of carborundum in the granite trade, and at the present time about 60% of the work performed in finishing granite in the United States is done with it. Its rapid introduction into this work is readily understood, as it is claimed that 1 lb. of carborundum will finish 8 sq. ft. of granite, while the same weight of emery will finish but 1 sq. ft. This wonderful difference in the efficiency of the two materials would undoubtedly by this time have converted the entire trade to the use of carborundum were it not that a good deal of time and experience are necessary for the workmen to learn how to handle so small a quantity of cutting material upon their granite beds; the use of the small quantity being a necessity for the proper finishing of the stone, since during the process the cutting material must be broken down to a powder, thereby producing the proper fineness of cut. The natural tendency of the workman is to use the same quantity that he had been using of emery, and in so doing he finds it impossible to produce the proper finish, since the carborundum continues to cut with a rankness that precludes closing up the pores of the stone.

Up to the beginning of 1897 carborundum wheels were generally used in small sizes, and it was the common belief that the material would not quickly enter into the large wheel trade; but it is a singular fact that in 1897 there was a complete reversal of opinion, and at the present time the greater consumption is in wheels of large dimensions, and the material is rapidly demonstrating its value for the roughest and hardest classes of work, in foundries, car-wheel grinding, plow manufacturing, and other lines in which it is subjected to the roughest kind of treatment. Carborundum spread on cloth and paper, in the same manner that emery and garnet are, made a decided progress in 1897. So far the spreading of the material upon the cloth and paper has been done by several of the manufacturers of emery cloth and paper, and while the finished goods have not been as regular as is desirable, they have, nevertheless, proved their high efficiency, compared with the older materials. In the finishing of shoe bottoms carborundum paper shows much higher efficiencies than garnet paper. Carborundum on cloth in the metal trades has not so far been accurately fixed in the matter of its efficiency, but it has, nevertheless, been permanently adopted by some of the bicycle manufacturers, and in small quantities has been sold to many other lines of trade. The results obtained seem to indicate that its complete success as a substitute for emery cloth and paper and garnet paper is chiefly dependent on its proper mounting and spreading on the supporting cloth or paper, and to accomplish this with a reasonable uniformity the Carborundum Co. is now considering the building of a factory for the special work, in connection with its plant at Niagara Falls. Carborundum in grains and powders made rapid advances into the steel ball trade in 1897, and at the present time all of the manufacturers of bicycle bearing balls either have permanently adopted it in place of emery or are about finishing their tests preparatory to its adoption.

During the year a small factory for the manufacture of carborundum was established near Dresden, in Germany, and for the purpose of determining the value of the German market, preparatory to the construction of large works, American-made goods have been shipped there, where they are said to be meeting with great favor.

One of the most interesting developments of the year in the use of carborundum, or, as it should probably be considered in this particular case, silicide of carbon, was in the manufacture of steel. Its substitution for ferro-silicon in steel manufacture has received more or less attention during the last two years, and the subject was quite fully investigated and written up by F. Luhrmann of Germany, who stated that it fulfilled all the conditions of ferro-silicon and had many other properties not possessed by the older material, and that its introduction was purely a matter of cost. This controlling factor (the cost) has apparently been met by the Carborundum Co., as it has recently received a second order for several tons of the material from one of the large steel manufacturers in the United States, who, it is understood, has permanently adopted silicide of carbon as a substitute for ferro-silicon, heretofore used by him.

The carborundum used for steel making is included in the production as reported above. For this purpose carborundum is sold in the form of a fine powder, which holds the same relation to grain carborundum used as an abrasive that the fine emery holds to grain emery in the emery mills, accumulating to a considerable extent and having been difficult hitherto to dispose of. About 25% of the make of carborundum is in the form of powder, and for abrasive purposes the market has not yet called for so large quantities.

CORUNDUM.

The production of corundum in 1897 was 230 short tons, against 250 short tons in 1896, each year the whole coming from North Carolina. The largest producer was the Hampden Corundum and Emery Co. Other producers were the Savannah Mining Co. and the American Corundum Co. Two or three producers beside these had small quantities of corundum on hand at the end of the year, which not being ready for market has not been included in the statistics of production. Corundum mining in the United States is not a prosperous industry at the present time, and the conditions in the abrasive trade are such as to discourage the production of corundum. At present prices it is doubtful if the mining of corundum in North Carolina can be carried on at a profit.

The most successful mine, and that which has produced most of the corundum in this country in recent years, is the Corundum Hill at Cullasaga, Macon County, N. C. This is now operated by the Hampden Corundum and Emery Co. New mines are being opened on Buck Creek, in the same county, which are thought to have some promise, but long and expensive roads will have to be constructed to reach them, and some difficult problems in cleaning the mineral will have to be solved, it is said.

It seems to be recognized that pure, high grade corundum is unobtainable in any considerable amount at the present time, and the trade is taking mineral contaminated with garnet, which formerly it would not do. Garnet being of the same specific gravity as corundum cannot be separated from it by wet dressing, but it is now claimed that it can be done by the Wetherill magnetic machines.

Leverett S. Ropes of Franklin, Macon County, N. C., gives the following information concerning the corundum mining industry in the South: The development of these deposits has been retarded by their remoteness, most of them being 15 to 40 miles from rail connection, while the veins or pockets heretofore discovered have been erratic in occurrence and size, and the exploring of a vein has been consequently a very discouraging task. The product has been mainly from the mines of one company, three out of four of whose mines have been for about three years closed. Economy can be practiced. This is true of every mine that has been worked, and along every line of progress of the ore from its extraction to its sale. Practical mining and mill men put in charge of any of the closed mines could put them on a paying basis if they have in the past been at all self-sustaining. But the hope of the future in this industry lies in the recent discoveries made on the brink of the watershed of the Blue Ridge Mountains, on the Atlantic slope. The occurrence of corundum is here in very strong contrast with all other known deposits. Instead of detached pockets in a contact deposit with the dolomite, chrysolite or serpentine rocks, there is a continuous lode that can be traced for three miles.

On my last visit I was enabled to examine the lode for one and a half miles, but especially at one point, where development work had been carried on to a considerable extent by means of cross-cuts into the side of the mountain about 2,000 ft. above the river bed and 3,500 above sea level. At two points on the northern slope quarrying had been carried on, the vein dipping with the face of the hill at 45° from horizontal. A half-dozen cross-cuts at intervals of 150 to 300 ft. showed the lode to be 8 to 12 ft. wide, and to have three "pay streaks" 2 or 4 ft. each in width. Ore from the quarry called the "Gold Standard Pit" gave 45% clean corundum from about 20-mesh to nuggets (crystals) the size of a hickory nut. The corundum, unlike the chrysolite family of corundums, is exceedingly uniform in color and quality, different sections of the lode differing only in the size of the crystals, which are barrel-shaped even where so minute as to require a glass to examine them. The ore or gangue is a fine, tough blue mica schist. There are about 1,000 tons of the ore cribbed up at the Gold Standard, which from a distance looks much like the blue, hard iron ores of northern Michigan. The ore concentrates readily on the jig, yielding a very pure product.

CRUSHED STEEL.

The production was about the same in 1897 as in the previous years. A new abrasive, "Krushite," was introduced for sawing and polishing stone. It is made of the best quality of steel, tempered by a new process, which is claimed to make it tough and unbreakable under the saws and rubbers. It is said not to crumble to powder as ordinary crushed steel does, nor to split like ordinary shot, but, being perfectly round and evenly graded, it cuts faster and scratches but little. "Krushite" is an imported product. Only a small quantity of it was used in 1897.

EMERY.

The production of emery in the United States in 1897 was 1,500 short tons, against 1,550 short tons in the previous year. This was mined by one producer at Chester Mass., and by two at Peekskill, N. Y. The domestic emery industry suffered from the same causes that affected the corundum industry.

GARNET.

The production of garnet in 1897 was 2,260 short tons, of which 1,050 were mined by four producers in the Adirondacks, New York, and the remainder at Chelsea, Delaware County, Pa., by two producers, and at Roxbury, Conn., by one producer. The product was valued at $35 per ton at the mines. In 1896 the output was 2,440 tons, of which 990 tons came from the Adirondacks, and the remainder from Pennsylvania and Connecticut. The output was valued at $40 per ton. The number of producers was the same as in 1896. The garnet industry in the United States is described in a separate paper which follows this article.

GRINDSTONES.

The production of grindstones in the United States in 1897 was made entirely in Ohio and Michigan, chiefly in the former State. The stone which is used for this purpose is a hard sandstone obtained from deposits which extend along the shores of Lake Erie for a considerable distance, east and west of Cleveland, O., extending inland as far as Marietta, and on the shore of Lake Huron, above Detroit. The grindstone industry is practically controlled by one producer, which alone makes upward of 50% of the total output.

INFUSORIAL EARTH.

This mineral was mined in 1897 in Maryland, Virginia, Nevada, and California, besides a few other States where only a few tons were produced. A new deposit was opened in the White Mountains, Esmeralda County, Nev., on the line of the Carson & Colorado Railway, and several hundred tons were shipped from this. The mineral is of white color, assaying upward of 94% SiO_2, bulky, and apparently highly suitable for steam-pipe covering, for which it is being employed. The deposit extends over many acres, and is said to be of considerable thickness, one shaft showing more than 30 ft.

A new deposit was also opened at Lompoc, Cal., by the California Anti-Caloric Co., which produced 500 long tons in 1897, valued at $9 per ton unground at the mine, and $18 per ton ground at the works in San Francisco. The company did no mining during the rainy season (winter), its work commencing in May and ending the latter part of October. The earth was produced for its own consumption in the manufacture of non-conducting coating for steam-pipes, etc. The company is anticipating a market for its product in the East, provided it can get freights which will be satisfactory.

F. W. Smither, in the *American Chemical Journal,* Vol. XIX., pp. 235–236, reports three analyses of infusorial earth from Richmond and King George counties, Va., and Calvert County, Md. The second is of exceptional purity, containing 65.83% of amorphous silica. The chief impurities are quartz and clay, with only traces of lime and magnesia.

MILLSTONES.

The production of millstones and buhrstones in the United States was less in 1897 than in the previous year, and may be expected to fall off slowly but steadily in the future, since more modern machinery is being applied to the purposes for which they are employed. In the manufacture of flour wherein buhrstones were once largely used, they have now been supplanted entirely by the roller process.

The domestic production of millstones is a quartz conglomerate which is found in large bowlders at several localities in Ulster County, N. Y., where it is called Esopus stone; in Lancaster County, Pa., where it is known as Cocalico stone, and in Montgomery County, Va., where it is known as Brush Mountain stone. The buhrstone which is imported from Germany is a basaltic lava. That which comes from France and Belgium is a hard, porous material, consisting of small particles of silica in a calcareous cement. The foreign stone is brought into the United States in small pieces, and is dressed here to proper size and shape for building up into wheels. The domestic stone, on the other hand, is worked down to a solid wheel of the required size.

PUMICE.

There was a production of 1,700 short tons of pumice in the United States in 1897, which was mined near Black Rock, Millard County, Utah, and in Western Nebraska, the deposits at both places being operated by the Chicago Pumice Co. There was no production of this material in 1896, the establishment of the industry in this country dating back only to the beginning of 1897, although the existence of the mineral was known previously. Beside those mentioned, a deposit was opened in Idaho, but we are unaware of any production from the last. The Utah pumice is a highly silicious, somewhat porous, volcanic rock; in quality it does not appear to compare favorably with the Italian mineral. The Nebraska pumice is a volcanic ash, which, according to Prof. E. H. Barbour, is equal to the imported ground pumice of commerce, so far as the eye can determine. The product of the mines in both Utah and Nebraska is shipped to works in Chicago, where it is ground and otherwise prepared for market, the finished ground product selling there at $25 to $35 per ton. We are unable to distribute the production in 1897 according to States, but the greater part may be credited to Nebraska. Very little work was done at the Utah mines in the last portion of the year. The Utah mines are situated near the track of the Oregon Short Line Railway, but are 245 miles distant from Salt Lake City. The deposits which have been opened in Western Nebraska are situated directly on the line of the Chicago, Burlington & Quincy Railroad. There are numerous deposits in this part of Nebraska, and also in Northwestern Kansas, which have not been exploited. The volcanic ash deposits of Nebraska are described more specifically in one of the following special papers.

TRIPOLI.

The production of tripoli in the United States in 1897 was 1,631 short tons against 1,405 short tons in 1896, most of the output in each year coming from Newton County, Mo. The deposits of this district are thus described by George E. Quinby, State Inspector of Metal Mines:

"This deposit occupies a unique position in the scientific world. It has attracted considerable attention from geologists, but they have never agreed upon its classification, and they differ widely as to its character. This difference of opinion is partly due to the fact that in its solid state the deposit is without a prototype anywhere. By some authorities the stone is regarded as infusorial earth, or in other words, a deposit made up exclusively of minute fossils. By others it is declared to be a product resulting from the disintegration of quartz. This latter theory seems to have for its foundation the fact that in many places small bowlders, or 'nigger heads,' are found imbedded in the formation, which on being broken prove to be hollow shells. These shells are in layers, the outer one being of soft 'rotten' tripoli, the next being firmer, and the center layer, or heart, being of quartz. The aspect of the section suggests that the shell was originally pure quartz, and that disintegration took place from the center, or inner portion, to the surface. The tripoli stone lies near the surface, with many outcroppings. It is not stratified, but is an irregular bulk, like bowlders, yet having none of the regularity or shape of bowlders. Its appearance in the quarry suggests volcanic upheaval. Originally white, it is colored, or tinted, from a bright red to a pale cream, by the percolation of washings from a waxy red earth, which uniformly overlies it. The vertical thickness of the bed varies from 1 to 20 ft. The stone varies in density, some of it having the lightness and porosity of chalk. The largest single deposit of tripoli stone underlies 500 acres, owned by the American Tripoli Co. of St. Louis, and is situated at the western border of Newton County, near Seneca."

The production of tripoli in Missouri in 1896 was 1,380 short tons; in 1897 it was 1,561 short tons. Besides the American Tripoli Co., the producers were the Seneca Filter Co. of Seneca, and the Allen Tripoli Co. of Dayton.

The Toledo Tripoli Co. opened a pit in Georgia and produced a few tons of mineral in 1897; it expects to do more in 1898. Its product assays 98.7% SiO_2, 1.0% $Fe_2O_3+Al_2O_3$, and 0.26% MgO—total, 99.96%.

WHETSTONES, SCYTHESTONES, AND OILSTONES.

The production of oilstones, including the Hindostan, Indiana sandstone, Arkansas stone, and Washita stone, in 1897 was 900,000 lb., against 615,000 lb. in 1896. The production of scythestones in New Hampshire, Vermont, Ohio, and Michigan increased in value from $45,000 to $62,220. Scythestones are commonly sold by the gross, and it is consequently impossible to give figures that would enable comparisons as to the quantity of the output to be made. There was not much change in the market for these materials. There has been during the past three years a steady falling off in the domestic demand for carpenters' tools, and a nearly equal falling off in the sales of oilstones. The foreign demand has been steadily increasing, however, particularly for Washita oilstones, since the foreign mechanic is slowly but surely learning that the Washita stone is much superior to the Turkey oilstone for sharpening tools.

The production of oilstones, etc., in the United States is practically controlled by the Pike Manufacturing Co., of Pike Station, N. H., which owns quarries at French Lick, Ga.; Orangeville and Paoli, Ind.; at Haverhill, Piermont, Orford, and Lisbon, N. H.; at Truxton, N. Y.; at Westmore and Brownington, Vt., and in Garland County, Ark. A good deal of stone is mined by outside quarrymen, but these have contracted their output to the Pike Manufacturing Co., which thus markets the whole output. The production of Arkansas and Washita stone is made entirely in the vicinity of Hot Springs, Ark., where two grades of novaculite are quarried for the purpose. The Hindostan and Indiana stones are fine-grained sandstone quarried in Orange County, Ind. The production of the various stones is given in the following table:

PRODUCTION OF WHETSTONES, SCYTHESTONES, AND GRINDSTONES IN THE UNITED STATES.

Kind of Stone.	1894.		1895.		1896.		1897.	
	(*a*) Quantity.	Value.	(*a*) Quantity.	Value.	(*a*) Quantity.	Value.	(*a*) Quan.	Value
Oilstones, etc.:								
Hindostan (finished product)	300,000	$9,000	300,000	$6,250	275,000	$10,000	250,000	$5,625
Indiana sandstone (finished product)	150,000	3,375	100,000	7,500			200,000	4,000
Arkansas stone (" rough rock ")	100,000	4,000	460,000	10,800	*b*340,000	50,000	100,000	4,000
Washita stone (" rough rock ")	250,000	3,125	203,200	10,614			350,000	4,375
Scythestones:								
New Hampshire (Indian Pond, etc.)	11,000	30,250	12,000	33,000	15,000	35,000	12,000	33,000
Vermont (**Lamoille, etc.**)	4,700	16,450	3,500	12,250	907	3,176	4,200	14,700
Ohio and **Michigan grit**	7,000	19,250	4,814	12,889	4,129	7,025	8,377	14,520
Grindstones:								
Ohio and **Michigan**	29,989	257,596	36,389	290,378	*c*31,301	294,338	36,651	366,675

(*a*) Quantities given for oilstones are pounds; for scythestones quantities are gross; for grindstones short tons. (*b*) Finished product in 1896. The product in 1894 and 1895 was "rough rock." (*c*) Michigan had no output in 1896.

CORUNDUM IN ONTARIO.

BY THOMAS W. GIBSON.

MR. W. FERRIER, an officer of the Canadian Geological Survey, had in his possession for several years some specimens labeled "Pyroxene Crystals" from the southern part of the township of Carlow, in the northern part of Hastings County. An examination of these specimens in 1896 disclosed that they were not pyroxene but corundum, and Mr. Ferrier was instructed to proceed to Carlow to locate the mineral, which after some difficulty, he succeeded in doing. The mineral was found in well-developed crystals, often of large size, and generally of a grayish or brownish color, as well as in irregular masses inclosed in a coarse-grained red feldspathic rock, having the appearance of pegmatite. Tests showed the mineral to be of good commercial quality, and the occurrence was considered sufficiently promising to lead to a further investigation of the deposits, which was undertaken in the autumn of 1896 and the summer of 1897 by W. G. Miller, of the Kingston School of Mining. He found that the corundum belt extended through the townships of Carlow, Bangor, Raglan, Radcliffe, Brudenel, Lynedoch, and Sebastopol. So far as ascertained the belt had a length of not less than 30 miles, and an average width of about two miles, extending in a northeasterly direction, with strong probability that it will be found to reach into the county of Renfrew. In some of the deposits discovered by Mr. Miller the mineral occurs in the comparatively rare rock, nepheline syenite, this mode of occurrence being believed not to have been observed in any other part of the world. The country rock of the district is gneiss, which in many places is intersected by coarse-grained dikes in which red or light-colored feldspar is a principal constituent. In some of these dikes corundum is found, while in others it is absent. The corundum-bearing dikes contain little or no quartz, but in the dikes not carrying corundum quartz is present in considerable quantity.

There are numerous places where the deposits of corundum are large and the total quantity in the field is believed to be very great. The Madawaska River furnishes abundant water and also is available for power, while other conditions of exploitation are favorable. There is steamboat communication via the York branch and Madawaska River with Barry's Bay, a station on the Ottawa, Arntrion & Barry Sound Railway.

Further west and south, in the township of Methuen, Peterborough County, corundum of a somewhat different variety has also been found. The mineral here occurs in a mica mine and is more translucent and sapphire-like than the Carlow variety. Some specimens are ultramarine blue in color.

Tests of the Ontario corundum at the Kingston School of Mining have shown that successful concentration is feasible on a large scale. The material examined contained about 28% corundum and 4.6% magnetite. Crushing tests demonstrated that the coarser sizes contained a larger percentage of corundum than the finer. After elimination of the magnetite, which can be done easily, concentrates containing as much as 92% of corundum were obtained without difficulty. The commercial standard is 80%.

It is believed that the amount of corundum available in these deposits is so large that the mineral can be supplied economically to the manufacturers of aluminum, for whom it will have a decided advantage over bauxite and cryolite owing to its much higher tenor in alumina. The Ontario government has not yet made known on what terms it will dispose of these deposits, which exist on Crown lands.

THE AMERICAN GARNET INDUSTRY.

BY F. C. HOOPER.

MINES or quarries in the States named below, in the order of their importance, furnished practically all of the garnet for the abrasive trade in 1897.

New York.—The Adirondack mineral still holds the supremacy by reason of its extreme hardness (8.0), and the improvements made in the methods of separating it from the associated minerals. Experiments carried out by the North River Garnet Co. of North River, Warren County, have resulted in placing the production of this garnet on a sound commercial basis, and have, as suggested by Mr. Merrill in THE MINERAL INDUSTRY for 1894, "revolutionized the methods of working."

Formerly the garnet, which occurs in pockets more or less scattered through a hard, compact hornblende-feldspar rock, was picked out by hand after breaking down by pick or blasting. Only the very richest beds could be exploited with profit, and the decomposed or surface portions usually determined the extent of the working in depth. The best garnet in the hard rock was left, and usually covered up with debris. The percentage of impurities varied, owing to the method of letting out small contracts to individual miners, who limited the amount of rock mixed with the garnet only when closely watched. Hence the garnet obtained was not only soft, for Adirondack mineral, but impure, rarely averaging over 70% and often below 50%. To keep the quality of his paper uniform the garnet-paper manufacturer had to go to the expense of having the mineral hand-sorted after its receipt at the factory.

By the new mechanical process brought out by the company referred to, the rock is broken down with steam drills, crushed and the garnet concentrated to over 95%. This degree of concentration is very unusual when the specific gravities of the two minerals are so nearly the same. The principal minerals associated with the garnet are feldspar and hornblende; the latter being much the heavier, is the only one that needs to be compared with the garnet. Determination on two clean pieces of garnet and hornblende gave 3.7 and 3.2 respectively as their specific gravities. As this company is not engaged in the manufacture of paper all the sandpaper companies are able to get a high-grade mineral of uniform quality.

The mineralogy and geology of these deposits have been determined by Prof. Kemp from specimens from the North River Garnet Co.'s deposit. He finds that the immediate associate of the garnet is a rock containing about 60% hornblende, and a very basic triclinic feldspar, properly anorthite. The wall rock contains a very large percentage of quartz, fully 50%. With it are oligoclase and small amounts of orthoclase, microperthitic feldspar, hornblende, green augite and considerable pyrrhotite and zircon. This is a not uncommon rock in this section of the

Adirondacks. Its granulation is due to pressure, and all the above minerals are shattered and strained by mountain-making upheavals. It was probably a rather feldspathic sediment originally that became metamorphosed to a gneiss, but it may have been a granite or similar rock now crushed and granulated. The garnet bed must be either a metamorphosed and originally impure limestone, which is most probable, or a very basic eruptive rock changed by metamorphism to its present state. The production for 1897 from this section was over 1,200 tons, with no change in price.

Pennsylvania.—This State continues to supply a large part of the garnet used in the shoe trade. The mineral is the ruby or rose-colored variety. The deposits are situated in Delaware County and occur in a quartzose gneiss.

Connecticut.—For three or four years the Shepaug Valley, in the neighborhood of Roxbury Falls, has supplied more or less garnet for the shoe trade in competition with the Pennsylvania mineral. The production of shoe garnet in 1897 from these two States was about 1,200 tons, by the following companies: Herman Behr & Co. of New York, Union Sand Paper & Emery Wheel Co. of Boston, and the Boston Flint Co. of Hallowell, Me.

Other States.—Garnet is found in several States in very rich deposits, but the quality and hardness of the mineral thus far discovered have been very low. The North Carolina beds were about the first to be exploited, but they were abandoned by all the garnet-paper manufacturers as being of inferior quality. Maine supplies a variable amount of second-grade mineral.

Uses, etc.—The application of garnet in the trades can be placed under the following heads: 1. Woodworking: It is in this line that the Adirondack mineral is chiefly used. Its hardness (8.0) being greater than quartz (7.0), combined with the fact that the garnet, unlike the quartz, never wears smooth, but always by its cleavage presents new cutting edges, makes it more desirable. Although common sandpaper is not so expensive it does less work in a given time and wears away much faster. For smoothing and finishing wagons, cars, carriages, wooden parts of bicycles, furniture, etc., the garnet is placed on a variety of machines which have special adaptations. Rapidly revolving cylinders with a lateral oscillating motion, to prevent the formation of lines in the woodwork, horizontal and vertical disks, and the leather or cotton belt all run at a high speed are types.

2. Boot and Shoe Trade: In these factories it is used for smoothing and scouring heels and soles. The garnet paper is applied to various cylinders or wheels revolving at a high speed and covered with felt to give a yielding surface, and sometimes a garnet paper belt running in a horizontal plane is used. Paper molded in various forms and applied to wheels with rims of the same cross-section are adapted to smoothing the extreme curved heels. Carborundum has been tried in the shoe trade, but it is not only too expensive but has proved very unsatisfactory, according to several firms.

3. Miscellaneous Uses: While the bulk of the garnet is used in the industries mentioned above, considerable amounts are employed in other lines. It will do excellent work on brass and any iron joint when the abrasive is confined between two surfaces. A prominent manufacturer of paper-mill machinery uses it in place of emery to grind steam joints, taking one-half the material and one-third

the time as compared with emery. While it is considered an adulterant when used in emery and corundum wheels, it undoubtedly increases their efficiency when added in proper amounts. The following illustrates its value in such wheels: A belt at the works of the Jos. Dixon Crucible Co. was covered with garnet and emery so as to make two narrow strips of the two abrasives side by side. In about 10 days, while the emery had not worn away so rapidly, its surface was glazed over and perfectly smooth, while the garnet would drag and cut as the hand was passed over it. From tests of a series of wheels made of different abrasives Mr. Jenks found that certain softer wheels cut faster in the long run than similar wheels made of a harder abrasive, which soon cease to cut and merely rub shoulders, although cutting with great rapidity a few moments without dressing. There is no doubt that if the emery and corundum wheelmakers would use a certain percentage (determined by experiment) of the best garnet in their wheels there would be no glazing over and the general efficiency of the wheels would be much increased.

NOTES ON THE ASH BEDS OF NEBRASKA AND THE GREAT PLAINS.

BY ERWIN HINCKLEY BARBOUR.

DURING the summer of 1897 it was the writer's privilege to accompany N. H. Darton, of the United States Geological Survey, throughout Western Nebraska and beyond into the edge of Wyoming and north into South Dakota. Probably between 7,000 and 8,000 sq. miles were surveyed at this time, and it is safe to say that the party was never out of sight of beds of volcanic dust, or "geyserite," as it is locally called. Some of these beds were plainly local, and could be traced to the point where they thinned rapidly, or were pinched out altogether. Other beds were of such constant recurrence that Mr. Darton was enabled to ascribe to them definite stratigraphic characteristics and relations, especially in the case of

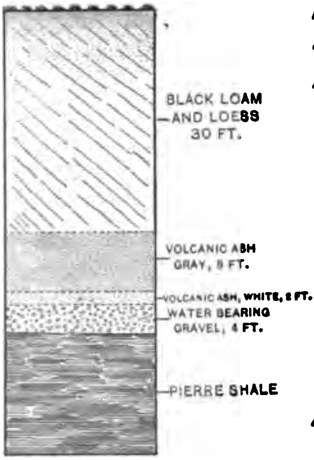

FIG. 1.

Section in Harlan Co. on the Kansas Line.

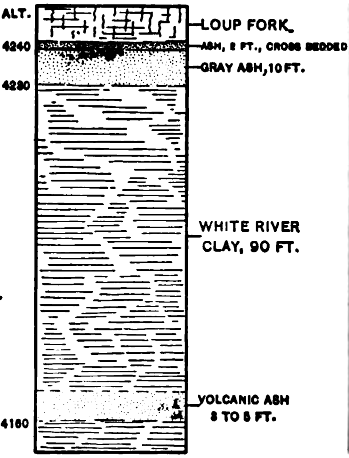

FIG. 2.

Section in Scotts Bluff Co. on the Wyoming-Nebraska Line.

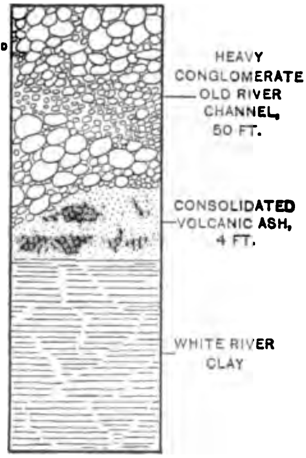

FIG. 3.

Section in Banner Co. Nebraska.

a lower and an upper layer. It is fair to say that the entire State is overlaid by these beds of natural pumice, which are less continuous, and thin out, and grow finer in texture as we go east, the region of Omaha being about the eastern limit.

Individual beds differ in purity, texture, and physical condition. Some beds are faultlessly pure and silvery white, making lines along the bluffs which are distinctly visible for miles. Others are adulterated with silt, sand, clay, lime, iron, diatom frustules and sponge spicules, often rendering it difficult to tell by the eye whether a given layer is impure ash, or simply a bed whitened by it. This much is certain, it is distributed over an area little less than the Great Plains, and in vertical range extends throughout the "Miocene" (Oligocene) up to and through the Loup Fork, and into the Loess. The clays of the Bad Lands are noticeably whitened by it in places. In other localities where too widely disseminated through the sediment to be visible in this way, it becomes apparent

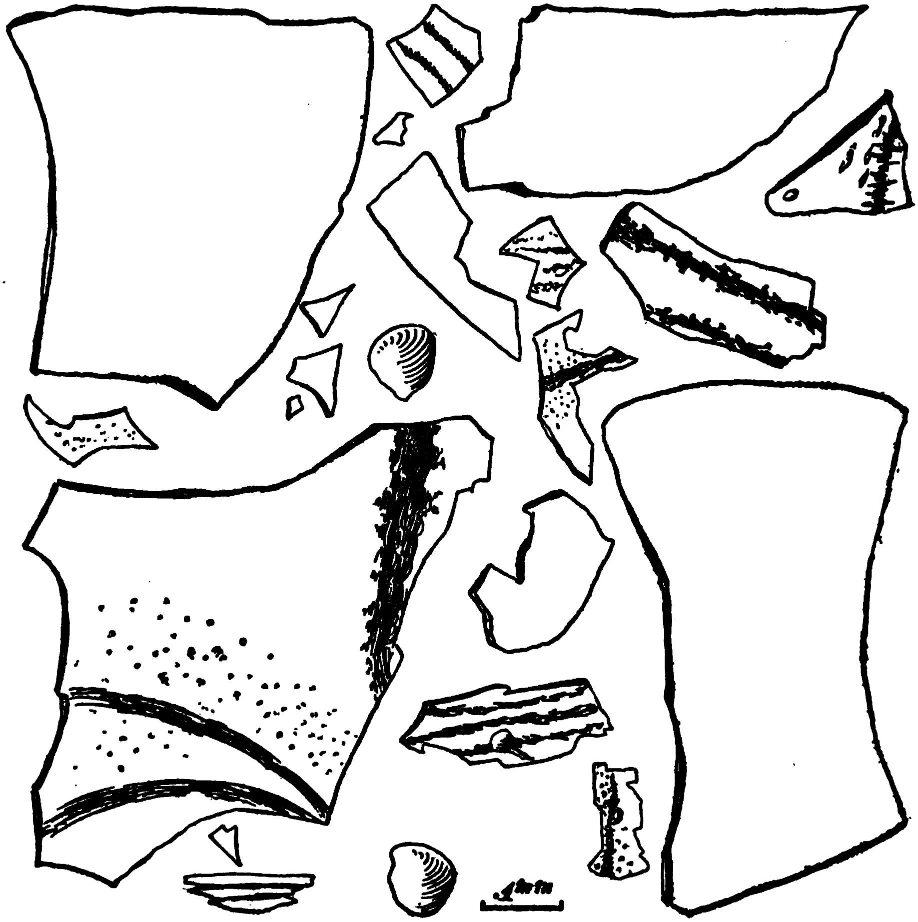

FIG. 4.

Characteristic volcanic ash from Chase County on the western boundary of Nebraska, showing coarse, glassy grains with some vesicular ones, and occasional grains of silt.

as the banks wash down, being assorted into thin, white layers by the running water.

As to texture, there are varying degrees of coarseness and fineness, glassiness, and vesicularity. As already reported, the coarser ash of the western counties grows finer toward the east. The coarser ash is inclined to lose its sparkling whiteness and become a dirty, ochreous color on going further west, as evidenced by specimens from Colorado, Wyoming, and Montana. The writer now has at hand a large amount of this ash from various localities, extending from Oklahoma north through Kansas, Nebraska, and South Dakota, all of it as a rule being so strikingly white and so fine in texture as to resemble the pumice of commerce. West of these States the samples at hand are coarser and more earthy in color.

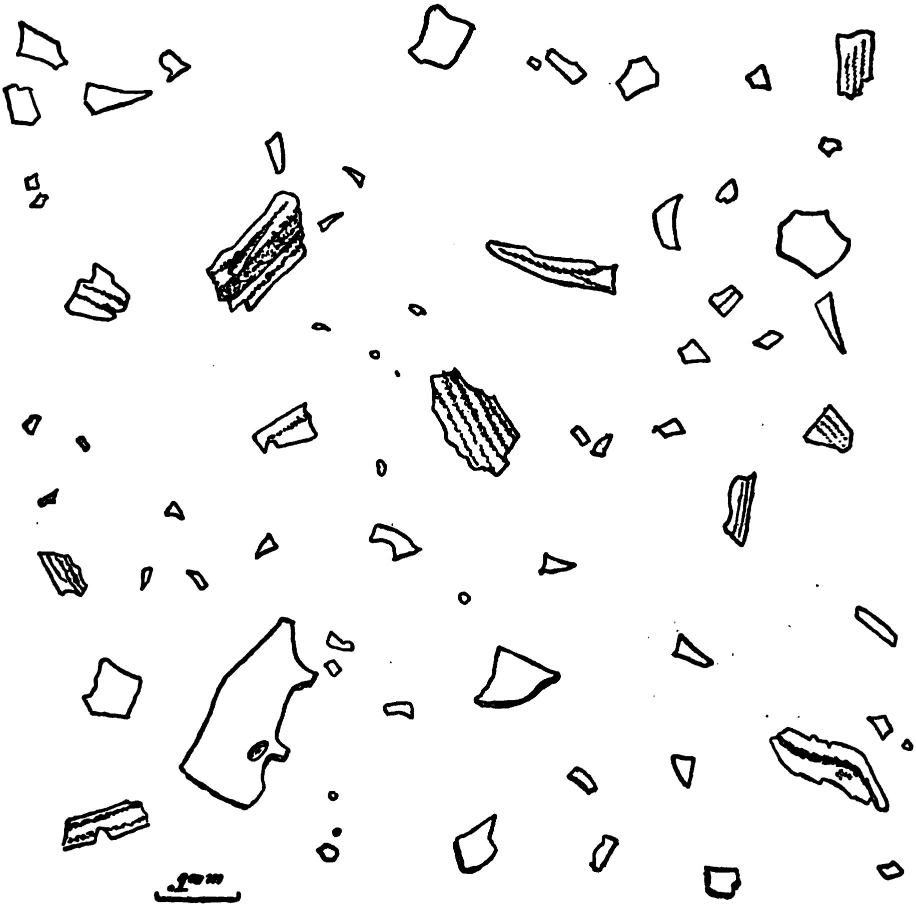

FIG. 5.

Volcanic ash from York County in Eastern Nebraska, showing glassy and vesicular grains. This is nearly as fine as common ground pumice, and is quite as free from foreign matter.

Though of æolian origin, no beds could show more distinctly than these that they were finally laid in water. They occur interbedded between layers of clay and sand; they are distinctly laminated and cross-bedded, in some cases highly so; they contain fresh water snails—Limnea, Physa, Planorbis and other forms. Very interesting fossiliferous ash beds were found by Mr. Darton along the very western line of the State, in southern Sioux County. The fossils are admirably preserved, being clean-cut, pure white and silicious, and in such abundance as to make it possible to prepare a fair account of the invertebrate forms of the time. Scattered vertebrate remains also occur in these ash beds.

The alternating beds of sand and clay are often characterized by pipes, or great concretions, which extend uninterruptedly through the beds of volcanic dust. Physically the volcanic ash occurs in every intermediate stage from that which is incoherent dust to that consolidated into fairly compact rock. The extent and thickness of the beds stand in evidence of extraordinary volcanic activity. Even as far north as Sheep Mountain, in the heart of the Big Bad Lands of South Dakota, beds were visited which measured from 10 to 15 ft. in thickness. Further south such beds were not uncommon, and still further south, in Chase County, are beds—not yet visited and vouched for personally—which are reported to be 30 ft. in thickness; and reports of similar beds come from Kansas and Oklahoma. It is certain that we saw in Scotts Bluff and Banner counties beds 100 ft. thick, which, although not consisting of volcanic ash wholly, were rendered nearly white by it.

Economically considered, it seems improbable, if not impossible, in the case of such extensively deposited and nicely assorted material, that uses for it should not be devised. It is reasonable to believe that here is a natural resource to be developed. At present the ash is used chiefly as a polishing powder, being put up as such by local dealers throughout Nebraska, Iowa, and Kansas. It is also used in the manufacture of scouring soap by firms in Denver, Colo., and Burlington, Iowa. The main shipments have been from Harlan County by way of the Burlington and Missouri River Railroad. Recently six carloads were shipped to Chicago and sold as pumice. It must be confessed that the shipment did not prove a wholly satisfactory substitute for the imported pumice. This is due largely, if not wholly, to the fact that much of the ash is in the form of flat, non-vesicular, glassy scales. But this does not represent all the ash beds, some of which seem to be as vesicular, as angular, and as well suited to purposes of abrasion as the best pumice of our markets. At present this natural pumice can be furnished at about $2.50 per ton, loaded on cars at the nearest station. However, this could easily be reduced to a few cents per ton in case of demand. As nearly as the writer can estimate it, about $5,000 represents the profits from the sale of this natural pumice during 1897. In this is included the annual income of $600 each, said to be earned by several local dealers in Nebraska and one in Iowa; also that of a number of druggists and others in frontier towns (who retail it in small packages as a polishing powder under various trade names), together with the larger amounts shipped out of the State.

THE MANUFACTURE OF CARBORUNDUM.

THE raw material for carborundum manufacture consists of coke 34.2 parts, sand 54.2, sawdust 9.9, and salt 1.7. At Niagara Falls two men can prepare the mixture for ten furnaces. At present only five furnaces are in use, each being operated successively. The walls are pulled down to allow the removal of the carborundum, so only the beds and ends of each furnace are permanent. This has been found advantageous owing to the walls becoming incrusted, and consequently to some extent conducting, when used repeatedly, thereby causing a decreased yield of carborundum. Each furnace, which is built of firebrick, is 16 ft. long, 5 ft. wide, and 5 ft. high. The end walls are 2 ft. in thickness. In the center of each end are the terminals, which consist of 60 carbon rods, 30 in. long and 3 in. in diameter, into the outer ends of which small pieces of ⅜-in. copper rod are fixed. A square copper plate bored with 60 holes connects and holds the carbon electrodes in place. The carbons having been put in position from the inside of the furnace the spaces between them are packed tightly with graphite, which prevents oxidation of the carbons and adds materially to their durability. The side walls of the furnace having been built up the charge is thrown in until it is rather more than half full, when a semi-circular trench of about 10.5 in. radius is made lengthwise in the furnace from end to end. Into this the weighed "core" of coke is placed, a mixture of old and new core being generally used. The bottom of the trench reaches a little above the bottom row of carbons. The core is built up so as to form a solid cylinder 21 in. in diameter and the whole length of the furnace. The side walls are raised to the full height of 5 ft. and more charge is thrown in and heaped up to a height of about 8 ft. The furnace is then ready for operation.

In a charge smelted June 28, 1897, 29,900 lb. of new mixture, together with a considerable amount of old mixture, were used. The core weighed 986 lb., of which 153 was old. The yield of carborundum was 6,735 lb. and of amorphous carbide 4,960 lb. At the start the current was 190 volts and 1,700 ampères; when nearly constant it was 124 volts and 6,000 ampères. The time was 35.75 hours. The kilo watt hours were 26,400, kilo watt hours per lb. 3.9, and pounds per hour 188. On starting the furnace no change is apparent until about half an hour, when the sawdust begins to burn. Carbon monoxide is gradually evolved, and after three or four hours comes off in sufficient quantity to ignite, when the sides and top of the furnace become enveloped in flames. At the end of five or six hours yellow sodium flames appear, fissures begin to form in the charge, and the upper portion sinks down as much as 3 in. This decrease in bulk continues to the end of the run, but more charge is thrown on, from 0.5 to 1 ton being thus added. After 36 hours the heating is finished. The furnace is then allowed to cool for 24 hours, when the side walls are partially pulled down and the loose mixture on the top of the furnace is raked off. This is used over again. Below this is a well-defined layer of amorphous silicon carbide, for which so far no use has been found, although it forms over 40% of the total carbide produced. The change from the amorphous carbide to carborundum is well marked, the latter forming a layer from 10 to 12 in. thick around the core. Below the carborundum is a thin layer of beautifully crystallized graphite. The carborundum broken out of the furnace is crushed and treated with dilute sulphuric acid (1:2) for three days at 100° C., whereby iron and alumina are removed. The clean carbide is then washed with water, dried, and graded according to fineness.*

---

* Charles A. Kohn, *Journal of the Society of Chemical Industry*, Nov. 30, 1897.

ALUMINUM.

THE production of aluminum in the United States in 1897 amounted to 2,000 short tons, or 4,000,000 lb., against 1,300,000 lb. in 1896. This was entirely the make of the Pittsburg Reduction Co., which continues to control the manufacture of this metal in the United States. It operates works at New Kensington, Westmoreland County, Pa., and at Niagara Falls, N. Y., the latter being the more important.

The remarkable increase in the production of aluminum in the United States in 1897 is attributable to the increasing demand for it to replace brass, aluminum now being sold about 10% cheaper than brass, to the increased use of aluminum for electrical conductors, and to a very large extension of the export trade, there having been large purchases for Japan, whence it is to be inferred that Europe and America will shortly be inundated with Japanese art work in this metal.

In Great Britain the British Aluminum Co. was the only producer of aluminum in 1897. On the continent of Europe the Aluminum Industrie Actien Gesellschaft, of Neuhausen, Switzerland, curtailed its output by the application to the manufacture of calcium carbide of a part of its water power, which has been used heretofore in the manufacture of aluminum. This concern has been erecting new works of about 5,000 h. p. at Rheinfelden, further down the Rhine, which will be in operation early in 1898, after which its aluminum production may be expected to increase again. The works at La Praz and St. Michel, both in France, made small outputs in 1897. These were the only concerns engaged in the production of aluminum in 1897.

The Pittsburg Reduction Co. maintained the average price of No. 1 metal, 98% pure, in ingots at 39½c. per lb. up to October, when it dropped to 38½c. In November another reduction was made, to 37c., at which it closed the year. No. 2 metal, 90% pure, was kept at an average of 32½c. throughout 1897.

PRODUCTION, IMPORTS, AND CONSUMPTION OF ALUMINUM IN THE UNITED STATES.

Year.	Production.		Imports.		Consumption.	
	Pounds.	Value.	Pounds.	Value.	Pounds.	Value.
1892............	295,000	$191,750	43	$51	295,043	$191,801
1893............	312,000	202,800	7,816	4,683	319,816	207,483
1894............	817,600	490,560	5,303	2,524	822,903	493,084
1895............	900,000	495,000	25,294	7,814	925,294	502,814
1896............	1,300,000	520,000	698	591	1,300,698	520,591
1897............	4,000,000	1,400,000	*Nil.*	....	4,000,000	1,400,000

In Great Britain the aluminum industry is now controlled by the British Aluminum Co., Ltd. That company brought actions against all persons who had imported aluminum from America and Germany, as a result of which all those who had disputed the monopoly submitted. Under the arrangements thus agreed to none of the companies which manufacture aluminum in foreign countries may supply aluminum to Great Britain. The British Aluminum Co. has now the right for a limited time to the use of Hall patents Nos. 5,669 and 5,670 for Great Britain, and has also an injunction granted on the Heroult-Henderson patent. The Pittsburg Reduction Co.'s selling agent, the Aluminum Supply Co., Ltd., has become the selling agent of the British Aluminum Co., that company having taken a half share in the Aluminum Supply Co., which had previously worked up a very good business as agent for the Pittsburg Reduction Co. The Pittsburg Reduction Co. consequently made no more sales of aluminum in Great Britain, except through the British Aluminum Co., and the firms which had been importing German aluminum into Great Britain having also submitted to the injunction and agreed to a similar arrangement, it left the British Aluminum Co. in possession of the field. This company has, however, contracted to take 3,000,000 lb. of aluminum from the Pittsburg Reduction Co. in 1898.

The British Aluminum Co., which was organized in 1894, has been more or less profitable, having accumulated earnings to the amount of £6,867 up to the beginning of 1897, out of which a dividend of 7% was declared at its annual meeting in May, 1897. The Neuhausen Co. has been vastly more profitable, however. Its net earnings in 1896 were 806,018 fr. against 761,397 in 1895, and its receipts from patents 200,000 fr., against 272,518 in the previous year. It paid a dividend of 10% on its capital of 11,000,000 fr. in 1896, which was the same rate it paid in 1893, 1894, and 1895, and up to date has returned its shareholders 50% of their principal. The Pittsburg Reduction Co. of the United States is a close corporation, and nothing is known publicly as to its earnings. It has made a large outlay in plant.

The seven works at present producing aluminum are using either the Hall or the Heroult process. There have recently been hints in one of the papers devoted to the interests of this metal of a possible combination of the various producing firms for regulation of the output and the price. The current price quoted for the best grade aluminum in England is 33.2c. per lb. A recently published estimate of the cost of production by Roberts-Austen was 27.2c. per lb., of which only 2.2c. is for electrical energy, while 12c. is for the raw material of the manufacture.

Minet's process for the production of aluminum, which was worked at St. Michel by Bernard Brothers of Paris from 1890 to 1894, when it was displaced by Hall's process, has recently been further experimented with at St. Michel. The process consists in the electrolysis of a fused mixture of aluminum fluoride and common salt, and it is said that a pressure of only three volts is required to effect the separation of the aluminum from this electrolyte.

Blackmore of New York has suggested the use of aluminum sulphide, manufactured by a cheapened method, in place of the oxide. Kershaw has examined this proposal and shown that it would not effect any reduction in the cost of the metal. Blackmore has also described a metallurgical method for producing aluminum which is more promising. Molten iron in shot form is allowed to descend through aluminum sulphide dissolved in molten fluorides of the alkali metals; the aluminum sulphide is robbed of its sulphur by the iron, and molten aluminum collects at the bottom of the vessel. Blackmore states that this process has been tried on an experimental scale with satisfactory results, but no details of the purity of the aluminum obtained by it have yet been published.

The influence of small amounts of carbon upon the physical properties of iron is so remarkable that it is interesting to note that repeated attempts have been made to obtain aluminum with a small percentage of it as carbide. The difficulty has been to get the carbide formed at temperatures below that of the electric arc. Dr. Roman has, however, patented a method for effecting the combination indirectly by means of calcium carbide. The aluminum and calcium are melted together in the required proportions, and in this way the carbon is transferred to the aluminum at a comparatively low temperature. Aluminum containing from 0.1 to 1.5% carbon has been produced by this method, and this is said to possess great elasticity and hardness.

ALLOYS OF ALUMINUM.

The useful binary alloys fall into two groups, one with not more than 15% of aluminum, and the other with not more than 15% of the other metal with the aluminum.* Tin improves the strength and rigidity in heavy castings of aluminum; it gives also sharpness of outline with a decrease in the shrinkage of the metal. With from 7 to 10% of nickel, the best aluminum is produced for casting where toughness combined with hardness is desired. Two new alloys for jewelry work consist of (*a*) 20 parts of nickel and 8 of aluminum; and (*b*) 40 parts of nickel, 10 of silver, 30 of aluminum, and 20 of tin. Manganese is one of the best hardeners, and is added as a rich ferro-manganese for castings, and as a pure oxide of manganese to the electrolytic bath in which aluminum is produced for rolling purposes. Tungsten alloys are specially used for rolled sheets and plates, to be afterward "spun," and generally in conjunction with other metals, such as copper, iron, and manganese. Aluminum hardened with chromium retains its hardness after annealing or heating better than almost any other of the alloys. Titanium increases the resilience, and with chromium, copper, and aluminum produces some very hard and tough light alloys. Alloys containing zinc up to 30% are successfully used. Cadmium does not harden aluminum, but with it produces a solder. Bismuth produces fusible and brittle alloys, which oxidize rapidly when melted.

An alloy of aluminum which possesses some interesting properties is the aluminum-zinc alloy recently described by Prof. Durand of Cornell University. It consists of about two-thirds aluminum and one-third zinc. Comparative experiments made between small bars of this alloy and similar bars of cast iron show that the new alloy is the equal of good cast iron in strength, and is superior in elastic limit. The color is white, it takes a fine, smooth finish, and it does not readily oxidize. It melts at a dull-red heat or slightly below, probably at about 800° to

---

* *Journ. Franklin Institute*, CXLIII., p. 145-147.

900° F. It can, therefore, be readily melted in an iron ladle over an ordinary open fire. It is very fluid, and runs freely to the extremities of the mold, filling perfectly small or thin parts. In this particular it is said to be much superior to brass, but it is brittle, like cast iron, and hence not suited to pieces which require the toughness possessed by brass. The tensile strength of the small bars referred to was found to be about 22,000 lb. per sq. in., and the sp. gr. 3.3. Aluminum-zinc alloys are not new. The difficulty with them is said to be that they tarnish more readily than other aluminum alloys, and are apt to be irregular in strength.

The alloy known as Margot's alloy exhibits a curious modification of color; it is purple with ruby-red reflections. It is a compound of 22% gold with 78% aluminum. It is very beautiful, but it is deficient in malleability. Margot is of opinion that its color is due to microscopic crystals of alumina disseminated in the mass; but this is open to doubt. The yellow alloy of platinum and aluminum can, by a modification of the proportions, be rendered violet or greenish. A rose-colored alloy is obtained with 750 parts gold, 200 parts silver, and 50 parts copper.

Romanium is a nickel-tungsten-aluminum alloy with 94 to 95% Al, 1% Ni, and 1% W—patented by R. I. Roman, London. Its sp. gr. is 2.74%, and its strength is said to be equal to that of a good phosphor-bronze. It possesses the color of pure aluminum, but takes a finer polish.

F. J. Davis says that the alloy of copper with from 10 to 11% aluminum is one of the strongest known, its tensile strength ranging from 80,000 to 90,000 lb. per sq. in. It also has a high elastic limit, but a low percentage of elongation (5% in 1 in.). The presence of silicon increases its strength and hardness, but decreases its ductility. Of the brasses the one containing 3.50% aluminum, 33.3% zinc, the rest being copper, is the best and strongest, having a tensile strength of from 75,000 to 85,000 lb. per sq. in. The addition of 0.1% silicon to melted copper before pouring makes the bath more fluid and gives clean and solid castings free from blowholes. Silicon acts in a similar way upon brass and tin bronze mixtures. Two silicon copper alloys (bronzes) are commonly used to-day, the alloy of 5% silicon and 95% copper, which is strong and tough, having a tensile strength of 75,000 lb. per sq. in., and 8% ductility, and the alloy of 3% silicon and 97% copper, which has a tensile strength of about 55,000 lb. per sq. in. and from 50 to 60% ductility. If more than from 5 to 5½% silicon be added to the copper it becomes brittle. Of the manganese bronzes free from iron, the one having the composition Cu 53, Zn 42, Mn 3.75, Al 1.25, makes a very strong and tough alloy, suited for propeller wheels, gears, etc., and for mining screens, as it is not attacked by acid mine waters.

In a paper communicated to the American Institute of Mechanical Engineers, Dr. Waldo points out that aluminum bronze is a very suitable material for the manufacture of the seamless tubes for water-tube boilers, for which brass and steel are now commonly used. He examined a series of alloys of aluminum and copper and obtained evidence of the existence of the following definite chemical compounds: Cu_2Al, Cu_3Al, Cu_4Al, Cu_5Al, Cu_6Al, Cu_8Al, $Cu_{10}Al$, $Cu_{12}Al$, $Cu_{14}Al$, $Cu_{16}Al$, $Cu_{18}Al$, $Cu_{32}Al$.

The evidence which Dr. Waldo adduces as proof of this may be summarized as follows: (1) A rise of temperature occurs when the molten metals are mixed; (2)

the alloys are crystalline, when carefully made; (3) chemical analysis and microscopical examination show them to be homogeneous; (4) There is no "sweating out" of either metal when the alloys are worked at a red heat. Of these alloys he recommends those having the composition Cu_8Al or $Cu_{10}Al$ as most suitable for industrial use.

A comparison of the tensile strengths of aluminum bronze with those of Swedish open-hearth steel and brass at different temperatures gave the following results:

Temperature of Experiment.	Aluminum Bronze.	Brass.	Swedish Open-Hearth Steel.
15° C.	96,000	81,900	79,800
980° C. to 1010° C.	6,100	2,770	17,500
1300° C. to 1400° C.	4,100	250	1,950

UTILIZATION OF ALUMINUM IN THE ARTS.

A paper by Alfred E. Hunt, printed in the *Journal of the Franklin Institute*, Vol. CXLIV., August and September, 1897, is an excellent summary of the properties of aluminum and the utilization of the metal in the arts. The following is an abstract of this paper:

One of the most important uses of aluminum has been in the manufacture of steel ingots and steel castings. In the manufacture of open-hearth ingots, from 2 to 4, or at most 5 oz. of aluminum to the ton of steel is used, the aluminum being added in the ladle, as in the case of steel castings, or (with more economy) as the steel is being poured into the ingot molds, the latter being the general practice in the United States. Bessemer steel ordinarily requires from 1 to 3 oz. more aluminum per ton of steel than similar grades of open-hearth steel to produce the same effect. A steel which has become "wild," as it is called by the melters, or oxidized and overheated, requires considerably increased amounts of aluminum over that used in ordinary cases.

Aluminum in steel manufacture (1) increases the soundness of tops of ingots, the consequent decrease of scrap and other items of loss more than compensating for the cost of the aluminum added. (2) It quiets the ebullition in molten steel, thereby allowing the successful pouring of "wild" heats. (3) It improves the homogeneity of the steel: (*a*) By preventing oxidation. (*b*) By the property of aluminum of rapidly permeating the steel, thereby increasing the ease with which other metals will alloy homogeneously with steel. (*c*) By decreasing the time that steel will remain fluid after being poured into molds and causing the steel when solidifying to do so more evenly, preventing a central core remaining molten longer than the outside portion of the metal, and in this way stopping the segregation of phosphorus and other impurities in the "mother liquor" of the metal remaining molten the longest. (4) It increases the tensile strength of steel without decrease of ductility. (5) It removes any oxygen or oxides that may be in the steel, acting, as does manganese, as a deoxidizer. (6) It renders steel less liable to oxidation in casting, by preventing the continued exposure of fresh surfaces of the molten steel in its ebullition in the molds after pouring. (7) It permits the production of smoother surfaced castings and ingots than it is possible to obtain without its use.

The chief advantage is in increasing the soundness of the tops of steel ingots and decreasing the scrap and other loss; and for this purpose its use is now becoming almost universal.

There is danger in adding too large a quantity of aluminum to ingot steel, in that the metal will settle very solidly and will be liable to form deep "pipes" in the ingots. To add just the right proportion requires some experience on the part of the manufacturer.

R. A. Hadfield of Sheffield, England, says that the influence of aluminum in steel appears to be like that of silicon, though acting more powerfully; and he (confirmed by Howe and Osmond) claims that an addition of aluminum does not lower the melting point of steel, *i.e.*, that the critical point is about the same whether aluminum be present or not. It is the aim, however, in adding aluminum to iron or steel, to add just enough to combine with all the oxygen present, but to leave no trace in the ingot or casting; any more than this is not required.

There are no such metals as "aluminum steels" in the same sense that there are "nickel steels" and "chromium steels." Aluminum is not a hardener of steel, and none of its alloys with steel in material proportions has so far proved advantageous.

Aluminum is the principal deoxidizer known to metallurgists, the next in efficiency being silicon. Their relative values are as follows: 100 parts by weight of oxygen will combine with 114 parts of aluminum, or with 140 parts of silicon, or with 350 parts of manganese. This, however, does not correctly express the value of aluminum as a deoxidizer of iron and steel, as it has so great an affinity for oxygen that it will entirely disappear if there is any oxygen present, and will be found in the steel and iron only after all the oxygen contained therein has been absorbed, which is not the case with either silicon or manganese. Moreover, the use of silicon will add from 87c. to $1.12 per ton to the cost of steel, while sufficient aluminum will not add over 10c., and in many cases not more than 6c. per ton to the cost. The saving in bad castings, or unsound ingots, will repay this many times over. One large English steel maker estimates his savings from this source alone at over $10,000 per annum.

In most common practice aluminum is added to steel in the form of the pure metal. It has then the advantage of quickly melting and homogeneously alloying, and the manufacturer knows just how much aluminum he is adding. Some manufacturers, however, prefer to use ferro-aluminum, which contains 5 or 10 or even 20% of aluminum alloyed with iron. Most users make their own ferro-aluminum by adding known weights of pure aluminum to known weights of steel or iron, casting the mixture into convenient molds.

In cast iron, from 1 to 2 lb. of aluminum per ton is put into the metal as it is being poured from the melting furnace. To soft gray No. 1 foundry iron it is doubtful whether the metal does much good; but where difficult castings are to be made, where much loss is occasioned by defective castings, or where the iron will not flow well or give sound and strong castings, the aluminum certainly in many cases allows better work to be done, and stronger and sounder castings to be made, having a closer grain, and hence much easier tooled. The tendency of the aluminum is to change combined to graphitic carbon, and it lessens the tendency of the metal to chill. Aluminum in proportions of 2% and over materially decreases the shrinkage of cast iron.

The effect of aluminum in wrought iron is not very marked in the ordinary puddling process. It seems to add somewhat to the strength of the iron, but not sufficiently to induce its general use for this purpose. The peculiar property of aluminum in reducing the long range of temperature between that at which wrought iron first softens and that at which it becomes fluid is taken advantage of in the Mitis process for making "wrought-iron castings."

The extreme ductility of aluminum makes it one of the easiest metals to roll. It is best to roll the larger ingots at a low annealing heat. Aluminum becomes hard and loses its ductility under rolling, and therefore requires frequent annealing during the process. It can be rolled so as to be quite stiff. The hardest rolled aluminum has about the temper of hard brass. Either in the pure state or alloyed with a small percentage of hardening ingredients it can be rolled into any sections into which steel is rolled.

In annealing an even heat should be maintained, and the metal allowed to cool slowly. The temperature should be such that a piece of iron or steel placed in the muffle in the dark will show a red heat; for annealing the sheet a much lower temperature will suffice. The proper heat is when the metal will char a pine stick so that it will leave a black mark when drawn over the plate.

Aluminum under pressure can be "squirted" through dies into almost any shape at a temperature of from 900° to 1000° F. In most of the devices for retaining the heat in the molten aluminum after it is poured into the pressure cylinder the casting cylinder is on trunnions, so that the metal can be poured with the cylinder in a vertical position, after which it is changed to a horizontal position and the piston-plunger inserted and made to act on what was the bottom of the ingot as cast, while the die, giving the desired shape to the metal when drawn, is inserted at the other end. An improvement, patented in England, is to have the cylinder in which the metal is cast a composite one, consisting of several cylinders of metal, one within the other, the space between the various metal cylinders being filled with some good non-conducting material, such as powdered granite, which has a high crushing strength. By means of this device the pressure on the interior metal cylinder is conducted to the outer, thick, cool, and therefore strong cylinders, without the heat of the contained aluminum being conducted away.

"Nickel-aluminum" is a trade name for aluminum alloyed with a small percentage of hardening ingredients, such as copper, nickel, zinc, manganese, tin, chromium, titanium, tungsten, and vanadium, the proportions varying according to the purpose for which the alloy is to be employed. Each of these metals produces a different characteristic in the alloy, as do also silicon and iron, the common impurities of aluminum, the ordinary commercial metal generally containing about 94.4% pure aluminum.

Cast aluminum can be very much improved in rigidity and tensile strength by drop-forging. For special light-running machinery, drop-forgings of nickel-aluminum are particularly well adapted.

The lightness, difficulty of corrosion, ease of keeping clean, high thermal conductivity, and comparatively high specific heat of aluminum make its use for cooking utensils particularly advantageous. Many attempts have been made to use soldered joints with aluminum cooking utensils, but have proved unsuccessful because of the galvanic action occasioning corrosion, set up between the aluminum and the metal of the solder.

Aluminum cooking utensils sometimes turn black by wear, especially where the metal has been subjected to the action of sulphuretted hydrogen, and where the aluminum contained a sufficient amount of copper alloyed with it to form a black sulphide of copper on its surface; and by the action of ammonium salts, which gradually attack the surface of the aluminum, leaving behind a coating containing silicon, which, although rapidly attacked by concentrated alkali, resists very many solutions of organic matter, as well as moist or dry air. An aluminum surface which has thus been treated has a brown or blackish color. It is really a very serviceable way to treat the metal for a durable finish, to withstand corrosion; but it has occasioned complaint on the part of those who do not understand the phenomenon as being caused by impurities in the aluminum. There is no injurious action in the discolored coating, which may be removed by treatment of the aluminum with caustic alkali; rubbing the metal with a rag dipped in alkali in a way to avoid too serious corrosion of the aluminum. If simply boiling water in a pure aluminum cooking utensil causes this marked black discoloration of the metal, it usually indicates that the water contains a considerable proportion of free ammonia in solution, which may be occasioned by contaminating sewage. One of the great advantages of aluminum is that the salts which are occasioned by its corrosion are not in any way poisonous.

As a reducing agent aluminum is already receiving important use. On April 28, 1891, a patent* was issued to Prof. John W. Langley for the use of aluminum as a reducing agent in the preparation of alloys of aluminum; also for an alloy of aluminum and titanium,† and an alloy of aluminum, titanium, and chromium.‡

Drs. Greene and Wahl,§ in 1893, devised and patented a method of producing metals free from alloying constituents by reducing their oxides with aluminum. The purity of the products depends on the purity of the oxides employed. By using an excess of the metallic oxide no aluminum remained in the product. In this way these investigators demonstrated that manganese, chromium, and certain other metals electro-negative to aluminum could be obtained from their oxides in a state of high purity by reduction with aluminum. This fact has been applied commercially to the manufacture of manganese and chromium.

M. Moissan has since called attention to the properties of aluminum as a reducing agent for the difficultly reducible metals, using aluminum in fine filings for the purpose, and has prepared many of the rare metals and has improved on the process of Prof. Langley in obtaining these metals in almost a state of purity. The general method is to throw a mixture of aluminum filings and the oxide of the particular metal into melted aluminum. Part of the aluminum burns, and there is so energetic a development of heat that the most refractory oxides are reduced, the metal mingling with the excess of aluminum. In this way alloys of aluminum with nickel, molybdenum, tungsten, uranium,

---

* U. S. Patent No. 451,404. † U. S. Patent No. 451,405. ‡ U. S. Patent No. 451,406.

§ Garrison, *Trans. Am. Inst. Min. Eng.*, XXI., p. 887; *Journ. Frank. Inst.*, CXXXV., p. 218.

and titanium have been prepared. An alloy can be obtained containing as much as 75% of tungsten. An aluminum-chromium alloy is readily obtained, and dissolves in all proportions in fused copper, forming a copper-aluminum-chromium alloy, from which the aluminum is readily eliminated by stirring in cupric oxide, a copper-chromium alloy being left. A similar method can be applied for the introduction of tungsten and titanium into open-hearth steel.

Aluminum has been used quite largely and increasingly for bicycle parts during the past few years. Many special alloys have been used in the making of bicycle frames, handle-bars, etc., which are simply pure aluminum hardened with a percentage (ordinarily less than 10) of nickel, copper, titanium, manganese, zinc, tin, and similar metals. Copper and nickel, while hardeners to a certain extent, do not render the metal as hard as do many other metals. They are advantageous, however, as carriers, permitting the proportion of the hardening material to be increased, and to give toughness and ductility to the product; but where extreme hardness is desired, zinc, manganese, and titanium give much more efficient results, although all of these, unfortunately, render the alloy more brittle than does nickel or copper alone.

In Great Britain the latest forms of aluminum bicycles do not have the frames made in one piece; but aluminum tubes are used, which are drawn on mandrels from hollow tube ingots and have the advantage over castings in both strength and ductility. These tubes are brazed by a secret process, and by the use of the X-ray apparatus are shown to be perfectly welded joints.

Aluminum has been used successfully for lithographic work, light plates being substituted for the heavy and expensive lithographic stone which has been used in the past. They are grained either by sand-blast, with a sand which is not too fine, or by placing them in a horizontal position in a sort of cradle with marbles about an inch in diameter, which are used for graining zinc plates, etc. These plates are rocked in this cradle with the marbles, sand and water, in the usual way. After the plates have been either sand-blasted or grained, their surfaces are cleaned with benzine, then dipped in caustic potash, then in a solution of nitric acid, and washed in hot water. After this, the plate can be worked on with pen and ink, and will take impressions from the specially prepared transfer paper which is used by lithographers.

In another lithographic process the plate is covered with a very thin coating of copper. The transfer is then put on with a prepared ink, which the acid does not attack, after which the plate is treated with an acid which attacks the copper, but not the aluminum. The copper is eaten away down to the aluminum, and leaves a printing surface which stands in relief like an electrotype.

For letters and signs aluminum has become quite extensively used in the form of fine powder or bronze, and in heavy cast letters, which can readily be attached to glass or wood.

Aluminum has been proposed for use in the roof and sides of passenger cars, and for fittings around windows.* Aluminum is already being used in metal appliances in street cars. For handle-bars there is a particular advantage in this

---

* The Minister of Railways in France has given permission for all parts of railway carriages formerly made of brass, copper, and iron to be made of aluminum, with the exception of axles, wheels, bearings, springs, brake-gear, and couplings. It is calculated that aluminum in other metallic parts of the structure will effect a saving in weight of 30 tons in every train of 20 carriages.—[Ed. Mineral Industry.

use, since with brass handles the operators are apt to suffer from sore eyes and affections of the mucous membranes, contracted by the hands becoming impregnated with copper salts.

Aluminum bronze powder, as it is called in the trade, has almost entirely replaced silver bronze powder. It is simply finely-powdered aluminum, which is more durable than silver powder, since aluminum corrodes less rapidly than silver and is entirely unacted upon by sulphuretted hydrogen. Aluminum bronze powder is used as a paint on signs and in bronze printing work, as well as for interior decorations.

Aluminum of over 99% purity is rolled into sheets of only 0.0005 to 0.0007 in. in thickness, and such sheets are hammered into leaf nearly as thin as gold leaf can be beaten. Aluminum leaf is largely used for decorative work, and on account of its relative cheapness and non-tarnishing qualities it has almost entirely superseded the use of silver leaf. It is ground up into powder and used in large quantities for the preparation of a decorative paint, called by the trade "aluminum bronze paint."

Aluminum, especially in forms where it is alloyed with a small percentage of hardening ingredients, is now employed largely in castings of all descriptions where lightness, non-corrodibility, or a silver color is desired. The alloys most used in general castings have a tensile strength of about 20,000 lb. to the square inch, and are about one-third the weight of brass.

The same general method is followed as in making brass castings. The metal should be poured as cold as possible, in order to insure sound castings, free from blowholes (caused by the very great absorption of gas by overheated molten aluminum), or cracks and depressions due to shrinkage. It is also desirable in most cases to use large gates and risers, as a further safeguard against these defects. The gate should be put in such a place on the casting that the metal will not "draw away" where the gate joins the piece.*

The practice of some molders is to immerse small quantities of niter in molten aluminum to purify it, the oxidizing effect of this salt undoubtedly acting somewhat beneficially if care is taken to see that all of the potash salts are allowed to come to the surface and are skimmed off, to prevent contamination of the metal.

In adding niter after the metal is removed from the fire, and before pouring, slightly dampen a sheet of writing paper with water and put therein one tablespoonful of nitrate of potash to about 100 lb. of metal. It should then be placed on the top of the molten metal, and instantly, with an iron ladle or stick, pushed to the bottom of the pot. By the time it reaches the bottom the paper burns, and the niter comes up through the metal, combining with the oxide as it comes to the surface. It is then skimmed off.

---

* *Chemiker Zeitung* in a recent issue says that in aluminum castings a distinction must be drawn between castings which are practically finished on leaving the mold and castings which are subsequently subjected to a forging or rolling process The difficulty of producing sound aluminum castings lies in the great contraction of the metal on cooling. This difficulty can be overcome by adding phosphorus to the molten metal in the proportion of about 1 g. to 1 kg. Thoroughly sound castings are obtained in this manner, but they are rather brittle, and therefore unfit for rolling purposes. Castings suitable for the last-named process are obtained by pouring some rape oil upon the surface of the metal, which is fused in iron crucibles. When all the oil is burned off the metal is run into the hot iron molds, and as soon as the contraction begins more metal is added. The ingots obtained in this manner are excellent for rolling, forging or wire-drawing purposes. Aluminum fused in graphite crucibles always has a tendency to crack in the rolling or forging, the more so the oftener it has undergone the process of melting in this kind of crucible. This appears to be due to the fact that aluminum takes up silicon from the crucible.—[ED. MINERAL INDUSTRY.

Charcoal is the best fuel to use in melting aluminum, and should be employed in all cases where especially good castings are desired; but both coke and natural gas are also successfully used. Care should always be taken not to overheat the metal and to prevent the occlusion of gases in aluminum. Both nitrogen and hydro-carbon gases are especially likely to be absorbed by molten aluminum. The flasks should be well vented.

Aluminum is melted in ordinary plumbago crucibles, such as are used for melting brass. If it be not overheated it will absorb no appreciable amount of silicon from the crucible. It does not unite with or absorb carbon in any considerable quantity when heated in contact with it, unless the metal be heated much above its melting point, which is 1157° F., or 625° C. At about 1000° F. the metal becomes granular and can easily be broken. (The melting point of copper is 1929° F.; that of cast iron, 2372° F.)

No flux is needed to cover aluminum, for it is non-volatile at any temperature that can be attained with an ordinary coke fire without blast. A very thin film of oxide forms on the surface of the molten metal, which, while not enough to injure either ingots or castings, protects the metal from further oxidation. The shrinkage of aluminum and certain other metals in casting is as follows: Pure aluminum ($\frac{13}{64}$ in.), 0.2031 in. per ft.; "Nickel Aluminum Casting Alloy" ($\frac{3}{16}$ in.), 0.1875; "Special Casting Alloy" of the Pittsburg Reduction Co. ($\frac{11}{64}$ in.), 0.1718; iron, small cylinders, 0.0625; thin brass castings, 0.167; thick brass castings, 0.150; zinc, 0.3125; lead, 0.3125; copper, 0.1875; bismuth, 0.1563.

The use of aluminum in the galvanizing bath has become so universal that at the present time it is considered a necessity in order to produce the best and most economical work. It is added in the form of aluminized zinc, which is made according to a process patented by Joseph Richards* of Philadelphia. Aluminized zinc is used in such proportions that the total amount of aluminum in the bath will be about 1 lb. per ton of bath, or in using a 5% aluminized zinc, 20 lb. of aluminized zinc per ton of bath. These proportions, however, are varied according to the grade of zinc which is being used, and also upon the class of material to be galvanized.

When aluminized zinc is used, it has been found unnecessary to use sal-ammoniac for clearing the bath of oxide, as the aluminum accomplishes the same purpose; and if the two are used together they seem to counteract the effects of each other. Aluminized zinc should be added to the galvanizing bath gradually; as the bath is consumed fresh aluminized zinc is added in the proportion of about 1 lb. at a time for a 5-ton bath when a 5% aluminized zinc is used. Aluminum first makes the bath more liquid. A larger amount seems to combine with the impurities in the zinc and comes to the surface in the form of a scum, which should then be removed, some sal-ammoniac being added to counteract the effects of the aluminum; the proportion of the aluminized zinc added should then be reduced. In starting with a new bath it is especially important that these suggestions should be followed.

Aluminized zinc is made by first melting the aluminum in a plumbago crucible and adding thereto zinc in proportions necessary to form the alloy required, ordinarily 5 to 10% of aluminum.

---

* U. S. Patent No. 456,204, July 21, 1891.

Aluminum has been used extensively in improving the quality of brass castings in all proportions from 0.1 to 10%; and the best results have been obtained by introducing the aluminum in the form of aluminized zinc added in the same manner as zinc is ordinarily introduced into copper. The effect of aluminum in brass thus added in quantities of less than 1% is mainly to make the brass flow freely and present a smooth surface, free from blowholes, and from one-half to one-third more of small patterns can be used on a gate than can be used without the presence of aluminum. In quantities of over 1% the effect of the aluminum commences to be very perceptible, from the fact that it imparts to the brass additional strength, which is increased directly with the percentage of aluminum up to about 10%. One per cent. of aluminum in brass is very extensively used for electrical purposes. By the use of a small percentage of aluminum a cheaper grade of brass can be employed to do the same work than would otherwise be possible. In all cases if maximum results are desired care must be taken that only pure metals are used. For aluminum alloys, metal containing more than 0.25% iron, arsenic, or antimony, or more than 0.02% of bismuth, should be excluded. Alloys should be poured at a low heat as soon as fluid. The presence of aluminum in these alloys lowers the point at which they become fluid, which is at lower temperatures than either gun-metal or ordinary brass mixtures; therefore the average brass founder is very likely to overheat them, and great care must be taken to prevent this.

The use of aluminum in cheap ordinary brass mixtures has sometimes occasioned the complaint that the surface of the brass castings is made black, due to the sweating out of the lead from the brass mixture which the impure brass has contained.

It is not advisable to use aluminum in brass which is to be dipped in acid, as the aluminum, even in small quantities, makes the metal withstand the action of the acid so completely that the dipping is not successful. For this reason brass which is exposed to corrosion is found to last better if it contains a proportion of aluminum up to say 10%.

The main objection to the considerable addition of aluminum to brass is the increased shrinkage of the alloy caused by it. This has to be provided for by pouring the metal not too hot and using large gates and risers.

Aluminum-brass has an elastic limit of about 30,000 lb. per sq. in. and an ultimate strength of 40,000 to 50,000 lb., with an elongation of 3 to 10% in 8 in., which makes it a desirable metal, but on account of the difficulty of making sound castings, and especially in rolling ingot slabs capable of turning out sound sheets, the business has grown rather slowly. It is necessary now in the preparation of rolling slabs of aluminum-bronze that each ingot shall be planed off on the top until sound metal is obtained below the blowholes, which always exist on the surface of the castings.

In the manufacture of aluminum-bronze both the copper and the aluminum should be pure. The copper should be placed in a plumbago crucible, and melted over a charcoal, coke, oil, natural gas, or producer-gas fire. It is impossible to make satisfactory aluminum-bronze over an ordinary coal fire, for the reason that the copper will absorb the gases from the coal. The copper should be covered with charcoal to prevent oxidation and the absorption of gases. When melted, the crucible should be removed instantly from the fire and the necessary percentage of aluminum dropped into the pot through the charcoal. The first action will be a cooling one, caused by the actual temperature of the aluminum; but as it and copper form natural alloys (*i.e.*, combinations in atomic proportions), it enters into combination with the copper, by which a large quantity of latent heat is set free (or made sensible) by the chemical union of the two metals, and consequently the temperature of the mass is raised. This occurs immediately after the aluminum is introduced; then if the crucible has remained on the fire it should instantly be removed, the charcoal skimmed from the surface, and the metal, which is now aluminum-bronze, poured into molds, keeping the liquid metal in agitation by constant stirring until it is poured, to be sure that the aluminum is well disseminated through the alloy. After cooling it should be remelted and poured into molds, for the purpose of manufacturing finished castings. Aluminum-bronze is found to improve with each successive remelting and casting, until this has been done three or four times; this apparently giving it a better chance to become more freely disseminated, and form a more uniform alloy with the copper.

The amount of aluminum in aluminum-bronze varies from but little up to 11%, depending upon the purpose for which the metal is intended. The strongest mixture contains between 10 and 11%. Beyond this point the bronze is hard to work, and becomes brittle. In soldering this alloy no such difficulty is encountered as is found in soldering pure aluminum. The best method of soldering is to use pure block tin with a flux made from zinc filings and muriatic acid. It is well to "tin" the two surfaces before putting them together.

As a conductor of electricity aluminum has received considerable use in the arts. Pure aluminum has a conductivity of 63 to 64%. It is practically non-magnetic, and may, therefore, be used for many purposes in electrical work where a magnetic metal would be useless. It may, therefore, in the future be largely used in the windings of field-magnets on dynamos where saving of weight is an object, and for switches, brushes, brush-holders, and apparatus, where its non-tarnishing and non-corrosive qualities should render it specially valuable. The conducting power of aluminum is greatly decreased by the presence of alloying metals. Pure aluminum has a much higher conductivity relatively to pure copper than is ordinarily given in the books.

Several hundred miles of aluminum wire for movable telephone and telegraphic work are in use. The weight of copper being 3.3 times greater, and the tensile strength of the two metals not very different, the use of aluminum wire for field military telephones and telegraph lines is especially advantageous.

Aluminum, alloyed with about 5% of copper to harden it, is just beginning to be used to replace brass castings in electrical apparatus. The electrical conductivity of the alloys used has been fully up to that of ordinary brass, and better even than that of ordinary copper castings, for the reason that copper, as it is ordinarily treated in making castings, absorbs a great deal of oxygen, which causes it to have markedly lower electrical conductivity than rolled copper, which, although reckoned at 100%, is often lowered to 30% in copper castings. Nickel-aluminum castings have been made with a conductivity of 50% in the same scale.

The best lubricant to use on aluminum when being turned in the lathe is either kerosene or water; and in the press, when the metal is being drawn or stamped, vaseline. The best results in working aluminum can be derived by using a "shearing tool," more resembling one used in working wood than for working iron or brass, which gives the metal an opportunity to free itself, rather than clog the cutting edge.

For the purifying of drinking water aluminum is destined to take an important part. Dr. Lugo has suggested the placing of aluminum plates as electrodes in the water to be purified, passing an electric current therethrough, the decomposition of the aluminum largely depending on the amount of impurities in the water. It has been shown that by this process the impurities in the water are coagulated with the hydrated oxide of aluminum around the anodes, and the water thus materially purified.

A patented process consists in subjecting water to the action of a coagulant composed of a comminuted alloy of aluminum and then separating the coagulum from the water through a suitable filter. The inventor prefers an alloy of aluminum with tin, or some other metal electro-negative to aluminum, with the idea that the aluminum will be decomposed and the water purified more readily than by the use of pure aluminum for the purpose.

Dr. Lugo, with his plant using the electric current, proposes to force the current (of about four volts) through the liquid from anode to cathode, and estimates that with the plant which he has in hand he will decompose about 3 lb. of aluminum per day per horse power.

The rationale of the process is that the gelatinous hydrate of alumina is one of the best purifying agents for water, and that this can be produced in more effective form from aluminum plates immersed in the water than by the addition of a salt to produce the alumina, which, in the case of sulphate of alumina, would leave considerable sulphuric acid in the water.

Aluminum hydroxide, freshly precipitated, has the property of coagulating animal or vegetable matter held in solution or suspension in the water, and of entangling a considerable portion of the minerals held in suspension, and these impurities are carried down with the precipitated hydrate. The addition of chemically prepared hydrate of alumina to the water does not seem to give the same desirable result, the action of the nascent hydrate, when this is generated in the water, seeming to be much more effective than when the already formed hydrate is added to the water.

Aluminum has been used largely for military equipments, especially in European armies, in canteens, buttons, belt-plates, rings for shelter tents, shoe-pegs scabbards, etc.

The soldering of aluminum has so far proved a difficult task. Most solders, such as ordinary hard solder, composed of silver and tin, or ordinary soft solder, composed of lead and tin, will not stick, owing to the high heat conductivity of aluminum. The heat is very rapidly drawn away from any of the molten solders, causing them to "freeze" before flowing sufficiently. Good joints, however, can be made by carefully cleaning the surfaces to be joined, and with very hot soldering bits, or careful work with the blowpipe, "tinning" the surfaces with some of the special solder used before attempting to join the metals. Several such solders are successfully employed, pure tin, with a little phosphor-tin, being the basis of the majority of them.

"Green's Aluminum Solder" is not used with any flux, simply requiring the aluminum faces to be cleaned and first coated with the solder; then with a clean, hot soldering bit to "wipe" the solder joint to be made. This solder is composed of: Zinc, 50.03%; tin, 47.99%; aluminum, 1.76%; phosphorus, 0.22%.

Many fluxes have been proposed in soldering aluminum. Common stearine, as used in wax candles, has been found as efficient as any. Soldering bits of nickel are best, and especially good work has been done with those kept hot by a gasoline torch or electric appliance. Special care should be taken to clean the surfaces to be soldered, which can be successfully accomplished by the mechanical means of scratch-brushing, scraping or filing the surfaces, thus exposing fresh metal free from the thin film of oxide of aluminum and the oxide of silicon (silica), which form a resistant and protecting coating over the surface of the metal, preventing either the soldering or plating of aluminum.

Another way to clean the surface of aluminum is to dip the sheets into nitric acid diluted with three times its volume of hot water, and just enough hydrofluoric acid to make the solution act on the surface of the metal, this action being denoted by the evolution of gas bubbles. The solution can be kept in either a wooden or lead-lined tank. The amount of hydrofluoric acid added need not be more than 5%, or at most 10% of the volume of the solution. The hydrofluoric acid required is the cheap fluid of commerce, sold in lead jugs and costing about 5c. per lb. The aluminum thus cleaned is again dipped into hot water for rinsing, and dried in hot sawdust.

The difficulty of making durable soldered joints of aluminum lies in the galvanic action which takes place between the aluminum and the metals composing the solder. The common metals are electro-negative to aluminum in a voltaic couple, and as the electro-positive element is the one attacked first and most severely, and the electro-motive force (or force produced by the difference in chemical action between aluminum and any of the common metals with which it comes in contact in a voltaic element) is equal to the sum of the electro-motive forces between all the intervening metals, it follows that care should be taken that aluminum exposed to water or other solutions should not come in contact with any other metal which will cause a voltaic couple to be formed.

Aluminum can be protected in places where it is exposed to galvanic action by insulating with rubber or canton flannel soaked in a mixture of white lead and oil, or some other non-conducting substance. It can also be protected by placing between the aluminum and the metal with which it is in contact a more electro-positive metal, such as magnesium, where the metal from which the aluminum is insulated is electro-negative to it, as is the case with most metals.

In the electroplating of aluminum the surface film of oxides should first be completely removed by immersing in caustic alkali, alkaline carbonate, or in a dilute solution of nitric acid with hydrofluoric acid as before, or by boiling in a strong solution of washing soda, which gives a rough surface, with a good "bite" for the plating. The aluminum is then washed and dipped for a moment in a hot solution of hydrochloric acid, say 50%. It is then plunged for about one-half second into a vessel of clean water and instantly transferred to a 0.3% solution of copper sulphate with a trace of acid. The solution will deposit copper on the aluminum in an adherent layer. Some gas is also evolved during the process. As soon as a uniform deposit of copper is obtained, which takes place in three or four minutes, the aluminum is washed with water and the plating continued in the usual way with copper, brass, silver, gold, or other metal.

The following is a method for plating on aluminum: The aluminum is immersed first in a bath of acetate of copper dissolved in vinegar, to which oxide of iron, some sulphur and aluminum chloride have been added (*sic*). This gives a deposit of copper over the surface. After this the article is brushed with a soft brass wire brush and well rinsed in clear water, and is then placed in the electrolytic bath to be plated in the usual manner. If the work is well done, this plating is so strong that no amount of bending will cause it to chip off or crack. After being plated with silver or copper the article may be treated by the sulphide process for "oxidizing," giving the same effect as "oxidized silver."

Aluminum has been suggested for many purposes for which it is not adapted: As where much soldering or brazing has to be done, where gas or liquids are to be confined at high pressure (although it is so porous that in the form of castings it is incapable of withstanding more than 100 lb. per sq. in. without leaking), or where it is to be exposed to high temperature. The melting point of aluminum is 1200° F. The point where it begins markedly to lose tensile strength is between 300° and 400° F. This will preclude its use for steam boilers and steam apparatus where the pressure is high. It has been found that a small percentage of iron materially raises the melting point.

Aluminum does not volatilize at any temperature ordinarily produced by the combustion of carbon, even though the high temperature be kept up for a considerable number of hours. It, however, is not good practice in making castings of aluminum to heat it much above its melting point, or to allow it to remain melted for any great length of time, on account of its capacity for absorbing gases.

ANTIMONY.

The production of antimony in the United States in 1897 was 750 short tons, against 613 short tons in 1896. The average price realized at the works in 1897 was 7c. per lb. Nearly the whole output was made at the works at Chelsea, Staten Island, N. Y. A little was made in San Francisco, where there are two small concerns which smelt occasionally. As in the previous year, the domestic make of metal was derived chiefly from imported ores, although there was a considerable increase in the domestic production of antimony ore. In 1897 the latter amounted to 500 short tons, averaging about 45% antimony, against 150 short tons in 1896. Antimony ore was mined in 1897 in Utah, Montana (near Thompson's Falls), Idaho (by the Idaho Antimony Co. of Kingston), California, and Nevada. In the last State the Big Creek mines, not far from Austin, which were considerable producers a few years ago, remained idle. The location of the California antimony mines was described in detail in Vol. V.; a new discovery was made in 1897 in Kern County, in the Laguna Mountains, 65 miles east of San Diego, from which some ore was shipped. Some exploration work was done in Arkansas, but there was no production in that State.

PRODUCTION AND IMPORTS OF ANTIMONY IN THE UNITED STATES.

Year.	Production.				Imports.				
	Metal.		Ores.		Crude and Regulus.		Ores.		Total Value.
	Pounds.	Value.	Pounds.	Value.	Pounds.	Value.	Pounds.	Value.	
1892........	400,000	$36,000	1,700,000	$51,000	3,950,864	$392,761	192,344	$7,338	$400,099
1893........	700,000	63,000	1,700,000	41,000	2,780,432	243,341	116,495	5,253	248,594
1894........	440,000	39,000	330,000	9,075	1,205,752	79,265	375,468	18,068	97,333
1895........	932,000	70,332	2,166,000	37,905	3,449,901	251,850	668,610	31,893	230,946
1896........	1,226,000	84,717	300,000	4,750	3,588,390	117,092	1,180,828	21,392	226,684
1897........	1,500,000	107,250	1,000,000	16,000	1,146,696	49,955	5,502,132	167,373	337,578

The mines of the United States Antimony Co. in Arkansas have been idle for the past two years, but it is said to be the intention to resume operations in 1898. The suspension is said to have been due to a falling out among the shareholders. The equipment of one of the main shafts was recently destroyed by fire, and this will have to be replaced before work can be resumed. The property of this company has been opened by 17 pits. Several new antimony mines were opened in this district in 1897, including the Wolftone which has a 9-in. vein of stibnite, the Pet which has a 14-in. vein, the Blucher with a 10-in. vein, and the Abbott with a 6-in. vein. Of these mines the Pet has already been equipped with hoisting machinery. All of these mines are in Sevier County. A small amount of antimony ore was mined in Utah in 1897, shipments amounting to 32 short tons in November and 45 short tons in December. The Idaho Antimony Co. of Kingston, Idaho, erected a 10-ton liquating furnace and is now shipping out its product as a concentrated mineral.

This table does not include the production of antimony in the form of antimonial lead, which is very important and is included under the caption "Lead" further on in this volume. It is consumed chiefly as an inferior kind of lead, for purposes for which lead might be used, and consequently is classified properly with that metal. As to "antimonial lead," its production, uses, etc., the reader is referred to THE MINERAL INDUSTRY, Vol. V.

There were no new discoveries of antimony ore in foreign countries which are worthy of special note. The chief sources of supply continue to be Austria-Hungary, France, Italy, and Japan as heretofore. The world's production is given in the following table:

WORLD'S PRODUCTION OF ANTIMONY ORE. (*a*) (IN METRIC TONS.)

Year.	Austria.		France and Algeria.		Hungary.		Italy.		Japan.		Mexico. (*b*)	
	Tons.	Value.	Tons.	Value.	Tons.	Value.	Tons.	Value.	Tons.	Value.	Tons.	Value.
1892....	97	$5,647	5,151	$137,769	868	$35,280	621	$45,672	1,343	(*c*)	....	....
1893....	441	24,339	7,250	134,809	881	32,160	1,193	40,402	1,527	(*c*)	9	$300
1894....	686	32,943	6,269	86,231	1,298	33,648	1,504	45,059	1,170	(*c*)	80	2,836
1895....	695	26,688	5,703	75,367	1,233	31,680	2,241	40,254	....	....	600	14,281
1896....	905	38,702	6,358	76,496	861	14,739	5,086	60,590	....	....	3,231	32,093

Year.	New South Wales.		New Zealand.		Portugal.		Queensland.		Spain.		United States.		Victoria.	
	Tons.	Value.	Tons.	Value.	Tons.	Value.	Tons.	Value.	Tons.	Value.	Tons.	Value.	Tons.	Value.
1892....	740	$73,400	370	$24,500	......	....	26	$1,390	395	$12,467	744	$51,000	299	$11,390
1893 ...	1,802	125,460	336	17,335	666	$51,789	30	1,440	88	2,784	771	41,000	90	2,155
1894....	1,270	93,720	45	3,805	803	47,698	28	1,400	15	300	150	9,075	36	875
1895....	486	36,255	55	7.430	753	33,889	(*c*)	....	44	700	982	37,905	(*c*)	....
1896....	135	9,170	21	2,250	595	26,775	(*c*)	....	54	1,385	136	4,730	(*c*)	....

(*a*) The foreign statistics are derived from the official reports of the several governments; those for the United States were collected specially for THE MINERAL INDUSTRY. (*b*) Export figures. (*c*) Not yet reported.

At Neronde, in the department of the Loire, France, a rich vein of antimony ore was discovered during the progress of explorations for iron pyrites. The ground in which the discovery was made forms part of the concession of the Violay antimony mines, thus bringing the number of known and workable veins in this concession up to three.

Antimony mining in Italy was described by G. B. Traverso, in his treatise *L'Antimonio* (1897). The chief antimony deposits of this kingdom are situated in the Province of Tuscany and in the island of Sardinia. The Pereta mine in Tuscany is opened in a mass of chalcedonic quartz, in which stibnite is sparsely and irregularly distributed, which makes its winning difficult and costly, especially since the quartz is very hard. The quartz deposit exists in the form of a great ellipsoid of which neither the hanging nor foot wall can be exactly determined. On account of the expense of working and the low price of antimony this mine is now idle. At Monte Auto there is a peculiar occurrence of antimony ore. Antimony glance is found in great blocks distributed in a black clay, in which no other kind of rock occurs except occasionally masses of dolomite which are impregnated by stibnite. Search for the original deposit has so far proved unsuccessful. The Cettine di Cotorniano mine at Siena is opened in a vein of blackish quartz-like rock, in which, at the surface, antimony occurs as oxide, changing to very pure crystalline sulphide at a little depth. The deposits at Su Suergiu, in Sardinia, exist at the contact of the Rhaetic limestone with Permian slate. Antimony glance accompanied by pyrites is found in the mica schist, Signor Traverso, who had opportunity for a thorough study of these deposits, expresses the opinion that they are of sedimentary origin rather than of vein formation. Mining is vigorously carried on at Su Suergiu, where the production is quite as important as at any place in Europe. There is a good dressing works and a large smeltery, in which the ore is purified by liquation, after which it is shipped to Livorno for reduction. There are several other places in Sardinia where antimony deposits have been exploited with good results, but most of these mines are now idle on account of the low price of the metal.

In the metallurgy of antimony there was little improvement, the same process that has been in use many years being still adhered to by the smelters. Siemens & Halske propose to treat gold-bearing stibnite by dry chlorination, lixiviation with water, drying, and again subjecting to the action of chlorine gas. After a second lixiviation the gold is supposed to be mostly in solution. The residue is then treated with HCl, whereby the antimony is converted to chloride, which is dissolved, and the solution electrolyzed, metallic antimony and chlorine gas being produced. The gold is precipitated from the first solutions by electrolysis, or any practicable method.

According to A. Irmler, *Chemiker Zeitung*, 1897, 111, the ore of the mines at Dublovic and Pricov, Hungary, ranges from 50 to 90% in antimony sulphide, and from 0.001 to 0.003% in gold. It is smelted in pots and retorts to crude antimony (sulphide). The purified sulphide is then reduced according to the roast-reduction method in reverberatory furnaces or according to the precipitation method in shaft furnaces. Irmler chambers are used for the condensation of the fumes of Sb_2O_3.

THE NEW YORK ANTIMONY MARKET IN 1897.

THE main supplies of refined star antimony are still drawn from Europe and Japan, as the quantities produced from home ores and foreign regulus are far from sufficient to supply the demand, although the latter has hardly held its own. This is principally due to the low prices at which antimonial lead has been selling recently, the quantity of which appears to increase from year to year. These supplies necessarily influenced the price of refined antimony to quite an extent, the more so as ores in Europe appear to be rather plentiful, and the output was fairly large. The selling prices have, notwithstanding, been remarkably steady, and would have shown hardly any variation had it not been for the duty of ¾c. per lb. levied by the Dingley tariff, while under the Wilson law the metal was free.

Throughout the first six months of the year the quotations were: For Cookson's, 7@7¼c.; Hallett's, 6½@6¾c.; Japanese, 6⅝@6⅞c., and U. S. French

Star, 6⅞@7⅛c. When it became evident that a duty would be levied, very large quantities of the different brands of antimony were imported, and thus heavy stocks accumulated. When the duty was declared in August, the accumulated stocks weighed on the market, and prices advanced only slowly; but by degrees, and as the supplies were consumed, prices crept up, and after the end of October shipments again commenced to arrive from abroad. At the end of the year quotations were: For Cookson's, 7⅝@7¾c.; Hallett's, 7¼@7⅜c.; Japanese, 7¼@7⅜c., and U. S. French Star, 7⅜@7½c.

AVERAGE MONTHLY PRICES OF ANTIMONY IN NEW YORK, IN CENTS PER POUND.

Year.	Brand.	Jan.	Feb.	Mar.	April.	May.	June.	July.	Aug.	Sept.	Oct.	Nov.	Dec.	Year
1891....	Cookson's	19.00	18.00	17.50	17.13	16.00	14.50	13.63	12.00	11.63	13.25	16.00	16.25	15.50
	Hallett's.........	16.50	16.75	16.00	15.50	14.75	13.00	12.00	10.63	10.00	11.00	12.25	12.75	13.50
	L. X..............	17.13	17.00	16.75	16.00	15.13	13.63	12.50	11.88	10.63	12.00	15.25	15.13	14.38
1892....	Cookson's	15.88	15.00	14.90	15.00	15.13	14.40	14.20	13.50	11.50	11.80	12.00	11.50	13.75
	Hallett's.........	14.40	11.00	10.90	11.00	11.50	11.25	11.00	10.75	10.50	10.50	10.63	10.75	12.10
	L. X..............	12.13	12.13	12.50	12.50	13.00	12.75	12.50	11.88	11.25	11.20	11.19	10.80	12.00
1893....	Cookson's	11.00	10.75	10.75	10.75	10.13	10.50	10.50	10.25	10.30	10.25	10.00	10.25	10.50
	Hallett's.........	10.25	10.38	10.00	10.00	10.00	9.90	9.88	9.75	9.60	9.75	9.50	9.25	9.88
	L. X..............	10.50	10.63	10.38	10.25	10.38	10.00	10.13	10.00	10.00	10.00	10.00	10.00	10.20
1894....	Cookson's	10.25	10.00	10.13	10.13	10.13	9.75	10.00	10.00	9.50	9.63	8.50	8.38	9.63
	Hallett's.........	9.50	9.38	9.50	9.38	9.25	9.13	8.75	8.88	8.88	8.25	8.25	8.13	8.88
1895....	Cookson's	8.00	8.25	8.15	8.00	8.00	8.00	8.00	7.85	7.85	7.75	7.75	7.75	7.95
	Hallett's.........	7.25	7.25	7.10	7.00	7.00	7.05	7.10	7.20	7.25	7.13	7.00	7.00	7.11
	U. S. Star........	8.25	7.50	7.38	7.50	7.35	7.50	7.50	7.75	7.50	7.50	7.50	7.50	7.56
	Japanese	7.00	7.00	6.88	6.88	6.88	7.00	7.00	7.20	7.00	6.88	6.88	6.88	6.94
1896....	Cookson's	7.55	7.43	7.37	7.44	7.50	7.37	7.00	7.00	7.00	7.00	7.00	7.18	7.23
	Hallett's.........	7.10	6.90	6.87	6.81	6.75	6.75	6.75	6.50	6.50	6.50	6.46	6.68	6.71
	U. S. Star........	7.25	7.09	7.00	7.00	7.00	6.91	6.75	6.75	6.75	6.75	6.75	6.93	6.91
	Japanese	6.75	6.75	6.75	6.75	6.75	6.75	6.75	6.75	6.75	6.75	6.75	6.75	6.75
1897....	Cookson's	7.12	7.31	7.37	7.44	7.25	7.25	7.25	8.00	8.00	8.00	7.81	7.81	7.55
	Hallett's.........	6.80	6.90	7.06	7.00	7.00	7.00	7.00	7.28	7.37	7.50	7.40	7.40	7.14
	U. S. Star........	6.80	7.00	7.06	7.22	7.05	6.78	6.87	7.28	7.37	7.50	7.40	7.50	7.15
	Japanese	6.75	6.80	6.75	7.00	6.75	6.78	6.87	7.15	7.25	7.25	7.15	7.18	6.91

ARSENIC.

Reference was made in The Mineral Industry, Vol. V., to the resources of the United States in arsenic ores, together with the suggestion that the preparation of arsenic and arsenic compounds should be undertaken from this material at home instead of importing them from abroad. There is much prospect that this end will be attained soon, since the Puget Sound Reduction Co. of Everett, Wash., undertook the erection of an arsenic department in the latter part of last year, and it will probably be put in operation during the current year. The works are being constructed on the Saxon model. They will use arsenical pyrites, of which a large supply is said to be available.

The world's supply of arsenic and arsenic compounds continues to be derived almost entirely from Prussia, Saxony (Freiberg), and Cornwall. The methods of arsenic winning employed in Cornwall were fully described in The Mineral Industry, Vol. III.; those of Saxony in Vol. IV.; while in Vol. V. there was a description of an interesting plant for the treatment of an arsenical gold ore, with recovery of the arsenic, at Bovisa, Italy. The world's production of arsenic compounds is given in the following table:

ARSENIC PRODUCTION IN GERMANY AND ENGLAND. (*a*)

Year.	Prussia.		Saxony. (*b*)		Total Germany.		England. (*c*)	
	Metric Tons	Value.	Metric Tons	Value.	Metric Tons	Value.	Metric Tons	Value.
1892..........	592	$27,740	1,075	$81,387	1,667	$109,127	5,196	$218,430
1893..........	710	31,939	1,084	87,648	1,794	119,588	6,172	288,470
1894..........	1,147	57,377	1,229	109,113	2,389	166,798	4,878	243,070
1895..........	1,788	98,368	1,217	108,826	3,014	207,416	4,875	260,990
1896..........	1,750	130,539	882	90,626	2,637	221,397	3,674	227,415

(*a*) From the official reports of the respective countries. (*b*) Includes arsenious acid, red, yellow and white glass, and metallic arsenic. (*c*) Arsenious acid.

The active demand for arsenic products and the money which is being made at present in their production led to a considerable search for arsenic ore in Cornwall in 1897. A new company was organized to purchase a property in the Liskeard district for the purpose of working an arsenic lode which exists there. The Devon Great Consols mine, which is the largest producer of arsenic in Cornwall, has realized from the beginning £534,636 from the sale of arsenic and £3,463,144 from copper ore. Working expenses have been £2,500,401 and dividends £1,210,758.

White arsenic, containing 98% arsenious oxide, and gray arsenic, containing 92% arsenious oxide, are now produced at the Spottiswoode Smelting Works, near Melbourne, Australia, and some of it has been exported recently to London.

Native arsenic of superior quality is reported to have been discovered in several of the deep levels of the Kapanga mine in New Zealand, and the find is said to be a valuable one. The existence of native arsenic in this mine is by no means a new discovery, however, the occurrence having been noted by Dana in his "System of Mineralogy" (Sixth Edition, 1896).

Native arsenic is not uncommon in other parts of the world. It generally occurs in veins in crystalline rocks and the older schists and is often accompanied by ores of antimony, ruby silver, realgar, blende and other metallic minerals. The silver mines of Freiberg, Annaberg, Marienberg, and Schneeberg in Saxony afford it in considerable quantities; also Joachimsthal in Bohemia, Andreasberg in the Harz, Kapnik and Orawitza in Hungary, Kongsberg in Norway, Zmeov in Siberia (where it is found in large masses), and at St. Maria aux Mines in Alsace; also at Mt. Corna dei Darden, Valtellina, Italy. It is abundant at the silver mines at Chanarcillo, and elsewhere in Chile, and at the mines of San Augustin, Hidalgo, Mexico. The occurrences in the United States are probably no less numerous, although fewer localities have been mentioned.

ASBESTOS.

THE production of asbestos in 1897 was 770 short tons, which was a very little more than in 1896. As in the previous year, this production was made chiefly in Georgia, where a true asbestos of short fiber is mined by the Sall Mountain Asbestos Co. A few tons were mined in California. A small amount of mineral was produced in Lawrence County, S. Dak., in 1896, by the Black Hills Asbestos Co. of Deadwood, but it made no output in 1897. A new discovery of asbestos was reported from the Chihuahua mining district, near Oak Grove, San Diego County, Cal., and samples have been sent us from the State of Washington, but there has been no production to speak of at any of these points. There is no doubt as to the existence of asbestos, either true asbestos or chrysolite, at many places in the United States, but the mineral is generally of poor quality—of short fiber, little strength, and woody texture—or the deposits are so small and unfavorably situated that they cannot be worked profitably.

Recently a vein of silky asbestos of long fiber was discovered in Georgia. This mineral is said to be the best yet found in the United States, but the vein has not yet been opened sufficiently to say how much of it there is.

The asbestos trade in the United States was quiet during the first half of 1897, but improved in the autumn, and the prospects are thought to be good for the present year.

ASBESTOS STATISTICS OF THE UNITED STATES.

Year.	Production.				Imports.		
	Short Tons.	Metric Tons.	Value.	Value per Metric Ton.	Manufactured.	Unmanufactured.	Total.
1890	71	64	$4,560	$71.25	$5,342	$252,557	$257,879
1891	66	60	3,960	66.00	4.872	353,589	358,461
1892	100	91	5,000	54.94	7,209	262,433	269,642
1893	120	109	6,000	55.00	9,408	175,602	185.005
1894	265	240	4,300	18.91	15,989	240.029	256,018
1895	664	602	11,837	19.66	19,731	225,147	244,878
1896	716	650	12,670	19.40	15,654	229,084	244,738
1897	770	698	15,400	22.06	10,570	264,220	274,790

The world's supply of asbestos continues to be drawn as heretofore from four sources: 1. Canada, whence the asbestos is white, silky, very unctuous, having supple fibers from 5 to 25 mm. in length; of all varieties it is that which spins the most easily. 2. Siberia, whence the mineral is yellowish, some species nearly straw yellow. The fiber is less flexible than the Canadian, more woody and dry, but stronger. Their length is about the same as the Canadian, but large masses of long fiber mineral are rarer. 3. The Cape of Good Hope asbestos has a characteristic blue color. It comes in larger pieces than either the Canadian or Russian, and their fiber is generally longer and stronger. In spinning or other manipulation, however, it is difficult to handle them, a good deal of the fiber being reduced to powder. 4. In Italy there are different kinds of asbestos, varying from the long silky fibers employed for spinning to the very short which are fit only to make heat-retaining coverings and the powder which is used for paint, etc. Canada and Italy are the most important sources of supply. The asbestos of Newfoundland has not yet come into the market.

Asbestic.—The use of "asbestic" increased considerably in 1897. This is the name given to the product obtained from the waste rock of one of the mines in Quebec. It is essentially a compact variety of chrysolite which, when ground to powder, gives a pulp full of short fiber that can be applied as plaster to wall surfaces and dries to a smooth, hard coating, very similar in character to an asbestos millboard. It is strong and durable, exceedingly refractory, and a remarkable non-conductor of heat. It is tough and elastic so that it will not crack with any slight unequal settlements, or from any ordinary expansions or contractions of the metal parts of a building. It stands outside exposure to weather without disintegrating. Asbestic, although quite recently introduced, has already been applied upon a very considerable scale in some of the newer buildings in the United States.

Acid-Resisting Asbestos.—F. Schrader* states that asbestos fabrics to resist acids, such as are required in the chemical industry, should be made of hornblende asbestos in which the proportion of bases to silica is as 1 : 1, or of the formula $RSiO_3$ (R being mostly magnesia). Asbestos of the composition 3 : 2 (that is to say serpentine asbestos) is attacked by very weak acids, like acetic acid, which remove the bases and leave almost pure silicic acid without apparently destroying the fibrous condition. Boiling for four hours with dilute hydrochloric acid (5%) effects the same result. Serpentine asbestos, on account of its fine and soft fiber, is particularly suitable for weaving and many technical applications other than chemical; while hornblende asbestos, owing to its acid-resisting character, is capable of employment in chemical works.

Testing Asbestos Board.—According to *L'Industrie*, asbestos board of good quality weighs about 1 kg. per sq. m. for each mm. of thickness; it ought to resist a dynamometric tension of 400 to 500 g. per sq. mm. of section. In order to judge the purity of asbestos board it should be reduced to a paste with warm water and thoroughly macerated. The paste is then transferred to a sieve of No. 30 to 32 wire cloth, and washed several times to remove foreign matter. The residue is then dried, without calcination, and weighed. The loss in weight from the amount originally taken should not exceed 20 to 25%. Testing asbestos board by calcination is less conclusive than the washing test, since it does not show if it contains such foreign matter as china clay.

---

* *Chem. Ztg.*, 1897, p. 285.

ASBESTOS IN CANADA.

By J. T. DONALD.

QUEBEC has been for many years the world's chief source of supply of asbestos; for asbestos it is in commerce, although mineralogists persist in saying that it is chrysotile, and not asbestos. Some noteworthy changes have marked the course of the asbestos industry in Quebec during 1897. Thetford and Black Lake, on the Quebec Central Railway, have heretofore been the chief mining centers, while Danville, on the Grand Trunk Railway, 86 miles east of Montreal, has been considered a minor factor in the industry.

The Danville deposit is interesting in more ways than one. It is situated about 90 miles from any other productive asbestos area, and moreover, the asbestos-bearing serpentine appears to be concentrated in a single hill. Knolls and hills abound in the district, which is fertile and well-tilled—in marked contrast to the sterile fields on the Quebec Central Railway. These have been carefully prospected, but as yet nothing has been found of sufficient value to lead to development.

The Danville estate, formerly known as the Jeffrey mine, has been worked since 1879, and has long been known as a producer of good fiber, not of as great length as that of some of the Thetford mines, but of good color, strength, and texture. During 1897 this property was an object of much interest to all connected with the asbestos industry. It is now owned by the Asbestos and Asbestic Co., Ltd., capitalized at £500,000, and is exceedingly well equipped. The company has built a line of railway, about four miles in length, to connect the mine with the Grand Trunk Railway at Danville, and uses its own locomotive. The factory in which the products of the mine are worked up contains machinery said to be valued at $175,000. Among the shareholders and directors are found representatives of firms largely interested in manufacturing asbestos goods, and in this way the company has within itself, as it were, a market for a considerable part of the produce of its mine. But the Danville mine does not produce fiber as long as that of some of the Thetford mines, and when users of the Danville goods went to Thetford for long fiber they found the miners there disinclined to sell their long fiber only. The outcome has been that consumers have been forced to buy from other than the Danville mine, even though interested in the latter, and on this account the disturbing influence of this mine on the trade has been less than some timorous operators expected.

Another interesting feature in the asbestos situation has been the discovery by B. A. Boas, the managing director of the Asbestos and Asbestic Co., of a new product, and the successful exploitation of the same.

It is well known that in the asbestos-bearing serpentine there are numerous small and very narrow veins of fiber. These until very recently have been considered valueless. The Danville serpentine is particularly rich in these minute veins. It occurred to Mr. Boas that this material instead of being considered waste might be converted into a source of profit. He began experimenting, and soon became convinced that this finely fibrous serpentine when crushed would make an excellent substitute for plaster. The new article was at once put on the market under the name of "Asbestic," and has already been largely used. It has many advantages over ordinary plaster. The unsanitary hair is replaced by the short fibers of asbestos, and when the asbestic is dry it is not so brittle as plaster, but on the other hand is so flexible that a wall may sink to a certain extent and there will be no cracking of the asbestic.

The Asbestos and Asbestic Co. claims that it owns the only asbestos mine that possesses serpentine so constituted as to make good asbestic, but the claim does not seem to be well founded. The writer has seen similar material made from the waste of asbestos mines in other parts of the field, and it was impossible to detect any difference in the two, either in the natural condition or when laid upon lathing.

The mines in the Thetford district have all been in active operation during the year, and their output for 1897 is larger than that of any preceding year. At Black Lake, on the other hand, all the mines have been closed.

The fiber in the latter camp is not so good in color or so free from iron as in Thetford, and as a consequence will not fetch so high a price. At present, therefore, the situation in brief is that there is no money in mining at Black Lake at existing prices, and the miners deem it wiser to reserve their store of mineral in sight until business can be done at a profit. They believe that before long the condition of the industry will be such that mining at Black Lake will again be profitable. For a time one of the Black Lake companies, which is also engaged in manufacturing asbestos goods, found it more profitable to purchase from the Asbestos and Asbestic Co. than to work its own mine.

The asbestos found in the Laurentian rocks to the north of the Ottawa River, in Ottawa County, is very free from iron oxide, and as a consequence has found favor with electrical manufacturers. A company known as The Non-Magnetic Asbestos Co. was formed in 1896 to work a deposit at Pointe au Chene, on the Ottawa River. Before work was properly under way disaster overtook the company from the fact that some of the promoters became involved in other connections. It is not improbable that Laurentian serpentine will afford an excellent field for the manufacture of asbestic when this new plastering material becomes more widely known. The serpentine is very light in color, and practically all the asbestos is in small interlacing veins, the very conditions most suitable for a high-grade asbestic for a final coat.

From time to time there have been rumors that Newfoundland would become a producer of asbestos and enter the lists as a competitor with Quebec. The building of the railway which is now in operation through a part of the island has rendered more accessible the asbestos and other mineral deposits. But on the matter being looked into it was found that, although the island contains what would most likely prove valuable asbestos deposits, the present conditions of the industry did not warrant any outlay in the attempt to open them. The well-equipped Canadian mines could very easily produce several times the amount actually put out each year, and when some of these mines are lying idle because work is unprofitable at present prices there is no inducement to invest in new mines.

The statistics of production in Quebec for the year are as follows:

Asbestos.—Thetford, 8,055 tons; Black Lake, none; Danville, 4,000 tons; Ottawa County, none. *Asbestic.*—Danville, 11,000 tons.

ASPHALTUM.

The asphaltum products of the United States are classified as (1) asphaltum proper, (2) bituminous limestone, (3) bituminous sandstone, and (4) grahamite or gilsonite. Bituminous limestone and bituminous sandstone are, as indicated by their names, limestone and sandstone impregnated with asphaltum. The production of these materials during the three years last elapsed is shown in the following table:

PRODUCTION OF ASPHALTUM AND BITUMINOUS ROCK IN THE UNITED STATES.

(IN SHORT TONS.)

States.	1895.			1896.			1897.		
	Tons.	Value.	Per Ton.	Tons.	Value.	Per Ton.	Tons.	Value.	Per Ton.
Bituminous sandstone:									
California	(a)38,921	(a)$121,586	$3.12	(a)49,456	(a)$122,500	$2.47	39,185	$117,555	$3.00
Kentucky	2,859	11,795	5.00	2,500	10,000	4.00	2,000	8,000	4.00
Total	41,280	$133,381	$3.23	51,596	$132,500	$2.57	41,185	$125,555	$3.05
Asphaltic limestone:									
Utah	92	$460	$5.00	800	$4,000	$5.00	2,140	$10,700	$5.00
Texas	6,000	30,000	5.00	4,200	51,000	12.14	None.	....	....
Indian Territory	....	....	....	....	....	....	250	750	3.00
Total	6,092	$30,460	$5.00	5,000	$55,000	$11.00	2,390	$11,450	$4.79
Asphaltum:									
California	(a)25,525	(a)170,500	6.68	(a)20,414	(a)362,500	17.76	27,397	486,620	17.76
Grahamite:									
Utah	1,702	51,060	30.00	1,282	38,460	30.00	1,756	52,680	30.00

(a) Statistics of California State Mineralogist.

California.—The production of asphaltum and bituminous sandstone in this State is derived from Santa Barbara, Santa Cruz, and San Luis Obispo counties. The asphaltum proper exists in two forms, solid and liquid, the latter being known also as maltha. These products are produced largely at the La Patera and Las Conchas mines, both in Santa Barbara County. The bituminous sandstone of Santa Cruz County contains about 20% of bitumen, while that of San Luis Obispo County has about 18%. The rock is worth $3 per ton at the mines and sells in San Francisco at $4.50. It makes a very good pavement, one ton being calculated to cover 100 sq. ft. of surface 2 inches thick.

An analysis of Santa Cruz bituminous sandstone gave the following result: bitumen, 20.04%; silica, 74.45%; carbonate of lime, 4.75%; water, 0.76%; total, 100%. The San Luis Obispo rock assays 16·77% bitumen, 82.60% silica, and 0.63% water.

Heretofore the more part of the asphaltum production of California has been marketed in San Francisco, but this city is no longer considered an important market and large quantities are now being sent to the Atlantic coast and to Europe. During 1897 the Alcatraz Asphaltum Co. closed a contract for asphaltum to be used in laying pavements in Glasgow, Scotland. This company made large outlays in the development of its property in the Sisquoc and Gaviota districts in Santa Barbara County, partly in the construction of the works which were mentioned in THE MINERAL INDUSTRY, Vol. V.

Indian Territory.—There was a production of 250 tons of asphaltic limestone at the Brunswick mines situated 3 miles east of Daugherty, where four deposits have been opened. The rock contains from 12 to 14% of asphaltum. The Hayes, Turner & Cooper Mining Co. erected at the mines a plant for the manufacture of mastic for floors, paving material, etc., which was put in operation Dec. 15. The Dennison & Northern Railway is expected to be built this spring, when the company will have direct railway communication.

Kentucky.—The asphaltum production of this State is entirely in the form of bituminous sandstone which is mined in Logan County, the deposits of which have been described in previous volumes of THE MINERAL INDUSTRY, especially in Vol. V. The Kentucky asphalt is said to be giving good results as paving material.

Texas.—There was no production of asphaltum-bearing rock in this State in 1897, the quarries near Uvalde, which were formerly operated by the Litho-Carbon Co., having been idle on account of its financial difficulties.

Utah.—The asphaltum production of Utah is made in the form of asphaltic limestone and grahamite, or as it is commonly called, though improperly, gilsonite. The latter is a valuable material which can stand a heavy freight, and, there being a more or less steady demand for it, the output does not vary greatly. Most of the product is shipped to St. Louis, Mo. The production of asphaltic limestone fluctuates largely, chiefly according to the local demand for it as paving material. Last year, however, a considerable quantity of asphaltic limestone from this State was shipped to Chicago by the Wasatch Asphaltum Co.

Manjak.—Attention was called last year to large deposits of bitumen, locally called "manjak," which exist in Barbados, an island of the West Indies, and is thought to bid fair to outrival in point of utility the similar substances that occur elsewhere in the world. Manjak is a mineral of black color, high luster, and bright, conchoidal fracture, in appearance closely resembling freshly broken pitch.

Two years ago, when the only use for the mineral appeared to be for fuel, it was sold at $5 to $10 per ton, but now it commands the same price as grahamite (gilsonite), i.e., $60 per short ton in New York, and the demand for it in the United States is said to be greater than the supply. It is used for making varnish, insulating electric wires and coating wooden pipe, in india-rubber manufacture, for making water-proof paper, car roofing, paving, for paint, and in making phenacetin and antipyrin, besides various new purposes to which it is being applied every day. As a result of this its use as a fuel has been given up. W. Merivale of Bridgetown, Barbados, is authority for the statement that the exports in 1896–97 were about 3,000,000 lb. and in 1897–98 3,250,000, the more part each year being "Merivale manjak," which sells at present (April, 1898) at £10 per 2240 lb. c. i. f. London, guaranteed free from dirt, earth, etc., but not guaranteed free from dust.

The other quality of "manjak" exported from Barbados is more like Trinidad glance pitch in character and brings about £2 per ton less than the "Merivale manjak."

THE WORLD'S PRODUCTION OF ASPHALTUM AND ASPHALTIC ROCK.(*a*) (IN METRIC TONS.)

Year.	Austria.	France.	Germany.	Hungary.	Italy.	Russia.	Spain.	Trinidad.	United States.
1892	78	14,690	53,279	(*b*)	34,580	150,000	668	113,200	42,675
1893	88	13,608	47,238	(*b*)	25,980	155,000	820	93,090	31,655
1894	116	14,336	55,961	4,432	60,493	160,544	985	93,965	35,098
1895	404	15,705	59,568	4,370	46,718	(*c*)	790	87,531	67,676
1896	390	17,717	61,552	(*b*)	45,456	(*c*)	1,117	97,931	71,096

(*a*) From the official reports of the respective countries. (*b*) Not stated in the reports. (*c*) Statistics not yet published.

EXPORTS OF PITCH-LAKE ASPHALT FROM TRINIDAD, 1886 TO 1896 INCLUSIVE.

Year.	To United States.			To Europe.			To Other Countries.			Grand Total of Exports in Crude Equivalent.
	Crude.	Dried.	Total Equivalent in Crude.	Crude.	Épuré and Dried.	Total Equivalent in Crude.	Crude.	Épuré and Dried.	Total Equivalent in Crude.	
	Tons.	Tons.	Tons.	Tons.	Tons.	Tons.	Tons.	Tons.	Tons.	Tons.
1886	22,225	....	22,225	5,130	5,394	13,221	....	....	....	35,446
1887	21,915	....	21,915	10,205	5,771	18,861	....	....	....	40,776
1888	24,321	....	24,321	8,445	8,248	20,817	....	....	....	45,138
1889	45,410	....	45,410	9,738	9,581	23,750	....	....	....	69,160
1890	39,907	....	39,907	11,755	9,951	26,681	668	....	(*a*) 668	67,256
1891	52,510	....	52,510	9,984	9,969	24,937	901	....	(*a*) 901	78,348
1892	70,806	....	70,806	11,596	9,458	25,783	1,076	....	(*a*) 1,076	97,665
1893	65,436	....	65,436	10,640	6,650	20,615	....	....	....	86,051
1894	71,860	....	71,860	8,967	9,418	23,086	....	....	....	94,946
1895	61,702	2,256	64,976	5,058	7,365	16,104	....	....	....	81,080
1896	60,637	....	60,637	8,320	8,052	20,391	....	1,800	(*b*) 1,918	82,946
1897	71,969	1,769	74,407	14,629	13,510	34,856	....	500	680	109,948

(*a*) Australia. (*b*) Argentina and Mexico.

EXPORTS OF LAND ASPHALT FROM TRINIDAD, 1886 TO 1896 INCLUSIVE.

Year.	To United States.			To Europe.			To Other Countries.			Grand Total of Exports in Crude Equivalent.
	Crude.	Épuré.	Total Equivalent in Crude.	Crude.	Épuré.	Total Equivalent in Crude.	Crude.	Épuré.	Total Equivalent in Crude.	
	Tons.	Tons.	Tons.	Tons.	Tons.	Tons.	Tons.	Tons.	Tons.	Tons.
1886	2,297	....	2,297	....	....	....	....	....	....	2,297
1887	1,195	2,100	4,345	220	....	220	....	....	....	4,565
1888	5,316	1,536	7,620	619	....	619	....	....	....	8,239
1889	10,490	2,052	13,568	....	....	....	833	....	(*a*) 833	14,401
1890	15,406	1,341	17,417	....	....	....	....	....	....	17,417
1891	20,507	7	20,517	139	....	139	40	....	(*b*) 40	20,696
1892	17,406	....	17,406	699	....	699	....	....	....	18,105
1893	3,450	....	3,450	2,432	1,862	5,225	110	178	(*b*) 377	9,052
1894	3,365	325	3,853	2,200	4,699	9,249	13	94	(*b*) 154	13,256
1895	4,445	199	4,744	1,770	2,368	5,322	....	169	(*b*) 254	10,320
1896	11,943	71	12,049	842	1,988	3,824	....	....	....	15,873
1897	19,248	*Nil.*	19,243	293	700	1,343	415	178	682	21,268

(*a*) Australia. (*b*) Canada, Venezuela, and West Indies.

Manjak is a hydrocarbon, the best quality containing only 2.5 per cent of water and impurities. It occurs in seams in blue clay, a stratum which is covered by a deposit of infusorial earth. The seams are ⅛ in. wide at the outcrop and gradually increase in thickness as they descend. No vein has yet been explored below 200 ft. At that depth one vein is 6 ft. wide, though higher up it was 30 ft. wide. The length of the veins is unknown, but it is believed that they begin beyond the sea on the south coast, pass under the coral in the center of the island, and end in the sea beyond the north coast. The strike is N.N.E and the general dip about 30°.

Ozokerite.—The production of this substance in Galicia, which is the only place in the world where it is mined at present, is practically controlled by a syndicate which possesses the greater part of the shafts in the Boryslaw, Truscawiec, Dwiniacz, and Starunia districts. The few outsiders are unable to produce enough to satisfy the requirements of any ceresin works, most of whom are, moreover, under engagement to buy from the syndicate alone. A few of the ceresin makers, having mines of their own, are able to make better terms than the bulk, who have to put up as best they may with the increased rates for raw material.

At the end of 1896 there were 44 ozokerite mines in active operation in Galicia, with a production of about 7200 tons per annum. There were 289 shafts, varying in depth from 74 to 214 m. against a range of 27 to 176 m. in 1892. Since the Länderbank acquired a controlling interest in the Boryslaw mines great improvements in the methods of working have been introduced.

The barren rock excavated with the ozokerite is freed from small pieces of the latter by washing and is then employed for filling the old workings. If, however, as at Starunia, the rock is impregnated with matter containing paraffin, the latter is extracted by the aid of boiling water. At Dwiniacz in particular a quantity of oil collects in the workings and is drained to the shafts sump, whence it is pumped. The crude ozokerite is worked up for ceresin, paraffin being extracted from the residue, which then forms "ozokerite pitch." In distilling for paraffin a burning oil comes over at 150° C.; that which comes over between 200° and 300° C. consists of a mixture of heavy oil and paraffin and is worked up for the latter or for vaseline. The chief yield of paraffin comes over between 300° and 350° C. The average yield at Boryslaw is: Light oil, 6%; heavy oil, 32%; paraffin, about 55%.

Although the whole of the crude ozokerite is melted on the spot, the more part is exported for refining. Germany takes about 31%, Austria-Hungary 35.5%, and Russia 27.4% of the total output. The manufactured ozokerite products are classified into normal (melting-point 65° C.), high prime, special high prime, seconds, and hard. Special high prime forms 50% of the total. The distinctive characteristics of Galician ozokerite are its high paraffin contents and low percentage of resinous matter, the latter not exceeding 5%, whereas American, Russian, and Rumanian ozokerite contain as much as 30%.

BARYTES.

The production of barytes in the United States in 1897 was 27,316 short tons, against 21,900 short tons in 1896. The increase was due partly to the general improvement in business and partly to the advance in the import duty on ground barytes. The improvement in this trade was more marked in the East than in the Central States. The price of ground barytes in New York during the early part of the year was very low, No. 1, or refined barytes, having been sold at $13 per ton, which was probably less than the cost of manufacture and transportation to New York. Since the new tariff has been in effect, however, imported barytes has been practically out of the market, and prices for the domestic article have advanced from 10 to 20%, with a demand at the end of the year greater than the supply. Reports from St. Louis, the chief Western market, however, indicate that the trade in 1897 was only fair, with no improvement in prices. This difference between the New York and St. Louis markets is not incomprehensible, the latter never having been subject to the competition of the foreign product to the same extent as the former. At the works in St. Louis and vicinity, ground barytes sold in 1897 at $11 per ton f. o. b. works. The Eastern market is supplied by grinders at Lynchburg, Va., and Hot Springs, N. C., who derive their supply of mineral from mines in the vicinity of Lynchburg, Hurt, Toshes, and Otter River, Va., and Sandy Bottom and Hot Springs in North Carolina. A few tons were mined in 1897 at Del Rio and Woolf Creek, Tenn. The St. Louis grinders obtain mineral from the vicinity of Cadet, Old Mines, Mineral Point, Morrellton, and Potosi, Mo. A small amount of barytes imported from Mackellar Island, Lake Superior, and ground at Michigan City, Ind., is not included in the following statistics.

PRODUCTION, IMPORTS, AND CONSUMPTION OF BARYTES IN THE UNITED STATES.

(In tons of 2,000 lb.)

Year.	Production.			Imports.			Consumption.	
	Quantity.	Value Per Ton.	Value.	Quantity.	Value Per Ton.	Value.	Quantity.	Value.
1893..........	26,632	$5.00	$133,360	4,459	$4.21	$18,791	31,091	$152,151
1894..........	23,758	4.00	95,032	2,720	5.80	15,826	26,478	110,858
1895..........	20,255	4.89	99,020	4,680	5.27	24,673	24,935	123,693
1896..........	21,900	4.00	87,600	3,333	7.38	24,619	25,233	112,219
1897..........	27,316	4.00	109,264	1,802	7.99	14,401	29,118	123,665

BAUXITE.

THE production of bauxite in the United States in 1897 was derived as heretofore from Alabama and Georgia. The output of Alabama was 13,083 tons; that of Georgia was 7,507 tons. The companies engaged in the production were as follows: Republic Mining and Manufacturing Co., Rock Run, Ala., and Hermitage, Ga.; Georgia Bauxite Co., Linwood, Ga.; Southern Bauxite Co., Cave Springs, Ga.; and the American Bauxite Co., Rome, Ga. The last concern was a new organization in 1897, which purchased extensive properties in Floyd County, Ga., and erected a washing and drying plant for the preparation of the mineral.

The occurrence and extent of the bauxite deposits of Alabama and Georgia have been described thoroughly in previous volumes of THE MINERAL INDUSTRY, to which reference should be made. There were no new developments of importance in 1897. The greatest depth to which the mineral has been mined up to the present time is about 100 ft.; so far there have not been any indications to give rise to apprehension as to the exhaustion of the deposits in the near future.

Of the recent improvements in the bauxite mining industry the most noteworthy is the installation of washing and drying plants. By this means the Georgia Bauxite Co. was able in 1897 to utilize several hundred tons of excellent mineral which would otherwise have been wasted, because it had been already consigned to the dump of worthless material. The Republic Mining and Manufacturing Co. uses a drying kiln, which is simply a revolving cylinder about 30 ft. long, through which the ore passes, and is heated by a furnace placed beneath the cylinder. The other companies employ either a homemade device or a Davis-Colby furnace, somewhat modified from that which is used for roasting iron ore.

The drying of bauxite requires considerable care, since it is not desirable to eliminate all the water in combination with the alumina. The proportion of water which it is proper to expel depends upon the purpose for which the bauxite is to be used. The work consequently requires careful supervision.

An important development in the bauxite industry in 1897 was the beginning of an export trade, a considerable quantity of the mineral having been shipped for this purpose by the Southern Bauxite Co. The statistics of bauxite production, etc., are given in the following table:

PRODUCTION, IMPORTS, EXPORTS, AND CONSUMPTION OF BAUXITE IN THE UNITED STATES.

Year.	Production.				Imports.		Exports.		Consumption.	
	Alabama.	Georgia.	Total.							
	Lg. Tons.	Lg. Tons.	Lg. Tons.	Value.	Lg. Tons.	Value.	Lg. Tons.	Value.	Lg. Tons.	Value.
1893......	7,063	3,965	11,028	$55,205	5,103	$28,217	....	....	16,131	$83,422
1894.....	8,687	2,045	10,732	42,928	1,028	6,661	....	....	11,760	49,589
1895......	14,000	4,800	18,800	56,400	5,797	34,782	....	....	24,597	91,182
1896......	9,796	7,300	17,096	42,740	2,119	10,477	....	....	19,215	53,217
1897......	13,083	7,507	20,590	41,180	2,645	10,515	2,537	5,074	20,698	46,621

The price of bauxite in 1897 averaged $7 per ton delivered at the works of the consumer. The miners, therefore, did not realize over $2 per ton. In 1891 the price at Pittsburg, New York, etc., was $10 per ton. The small profit which is now won in this industry and the limited demand for the mineral explain why there is not more competition in its production.

BISMUTH.

A DISCOVERY of rich bismuth ore in the Boss Tweed mine at Mammoth, Utah, was reported in 1897, but investigation proved that it did not amount to anything. Small pockets of bismuth ore are frequently found in the Tintic mines, but there has never yet been disclosed a regular seam from which any considerable amount of the mineral could be obtained. A discovery of bismuth ore was also made in a mine in Colorado, where a seam carrying bismuth was found alongside of a seam of gold-bearing copper ore. About 800 lb. of bismuth ore from this mine was taken out incidentally in getting the copper ore. It averaged 40% bismuth and 8 to 12 oz. silver per ton. The existence in New Mexico of an ore assaying 12.54% bismuth, 11.61% tellurium, 74.2% silica, and 3.4 oz. gold per ton was also reported.

In the metallurgy of bismuth the only novelty of the year was the description of an electrolytic method for the refining of the impure commercial metal. According to this the anode is formed of the crude metal, and placed in a tank with a solution containing nitric acid as an electrolyte. Carbon, pure bismuth, or platinum, may be employed as the cathode. A current density of 15 ampères per sq. ft. of active bismuth surface is recommended, and the density must not exceed 30 ampères. Pure bismuth is deposited on the cathodes, whence it falls, or may be easily removed. It is then washed with dilute HNO_3, dried and fused. When the electrolyte has become too rich in lead, which is invariably present in considerable quantities, it may be freed from it by electrolysis, or the contained bismuth may be precipitated by metallic lead, and the remaining solution of lead nitrate utilized in any way found expedient.

The occurrence of bismuth ores, the methods of reduction, and the uses of the metal were fully described in THE MINERAL INDUSTRY, Vol. II. The metallurgical methods employed in the production of bismuth in Saxony were described specifically in THE MINERAL INDUSTRY, Vol. V. The world's supply of bismuth continues to be derived from Saxony, and from Johnson, Matthey & Co., of London, who reduce Australian and Bolivian ores. No description of the method employed by them has ever been published. Mr. Edward Matthey has, however, made numerous contributions concerning the metallurgy of bismuth to the Proceedings of the Royal Society. Special reference may be made to a paper in Volume 42, 1886, and to papers in Volume 43, 1887, and Volume 49, 1890.

BORAX.

THE borax industry of the United States in 1897 was more than ever in the control of the Pacific Coast Borax Co., which secured an increase in the tariff on crude and refined products in the Dingley bill, and was thereby enabled to shut off more completely competition on the Atlantic coast, the independent refiners of the East having previously imported large quantities of borate of lime, while California mineral was being exported to Liverpool, where it was sold at very low prices, say 1½@2c. per lb. for crude mineral.

The history of the American borax industry, with record of prices, statistics of production, account of the deposits, domestic and foreign, etc., may be found in previous volumes of THE MINERAL INDUSTRY, to which reference should be made. In 1897 as in every year since 1890 the greater part of the American product came from California. A small amount was obtained last year from Southeastern Oregon, about 150 miles north of Winnemucca, Nev., to which place the mineral is hauled by mule-teams.

An important event of the year was the decision of the Pacific Coast Borax Co. to transfer a part of its refining operations from Alameda, Cal., to the vicinity of New York. Works to cost about $100,000 are now being erected on land fronting on the Kill von Kull, at Bayonne, N. J. These works are intended to supply the Eastern market, while those in California will supply the Western.

The price of refined borax in barrels in New York, which was 5c. per lb. January 1, 1897, rose to 5¼c. on February 13, 5¾c. on October 26, 6¼c. on November 22, and 6¾c. on December 31. The quotation for borax in sacks was uniformly ¼c. per lb. less than these figures, and for "concentrated" ⅜c. per lb. less. It is thought in the trade that the price cannot rise much above the present quotations without seriously curtailing the demand, as has been found by previous experience. The price of refined borax in England was a little less than 2c. per lb. under the New York quotations. On January 31, 1898, the price of refined borax was raised to 7c. per lb. and that of refined lump in sacks to 6¾c.

When the price was high, borax was used more or less sparingly, but when the low range of values was established by the tariff law of 1894, makers succeeded in largely increasing the consumption of borax, and what they lost in profit by the reduction in the tariff they made up by increased sales. The packing industries are now using larger quantities of borax than ever; tanners have been induced to use it in softening the water for the soaks, cleansing and preserving the hides and skins, and preventing the withdrawing of their gelatine, and the household use has largely increased.

PRODUCTION AND IMPORTS OF BORAX IN THE UNITED STATES. (*a*)

Year.	Production. (*b*)							Imports.					
	California.	Nevada.	Total.		Value.			Borax—Crude.		Borax. Refined.		Boracic Acid.	
	Pounds.	Pounds.	Pounds.	Met. Tons.	Total.	Per Lb.	Per M. Ton.	Pounds.	Value.	Lbs.	Value	Pounds.	Value.
1893..	7,999,562	1.199,438	9,199,000	4,173	$689,925	7½c.	$165	543,967	$13,659	11,230	$1,327	771,775	$40,568
1894..	11,540,099	1,600,595	13,140,594	5,950	919,842	7c.	155	441,066	11,427	1,812	225	292,990	19,262
1895..	11,919,141	1,587,215	13,506,356	6,126	742,850	5½c.	121	4,234,261	105,604	612,730	26,429	925,158	42,056
1896..	13,609,614	1,648,400	15,258,014	6,649	762,900	5c.	110	4.307,100	104,951	11,876	796	555,769	21,899
1897..	....	....	21,422,000	9,717	1,285,320	6c.	132	5,204,612	79,268	19,087	1,128	....	....

(*a*) The figures of production are for calendar years; those of imports are for fiscal years ending June 30. Included with the production of borax in 1896 are 621,000 lb. of boracic acid, worth 7½c. per lb. The manufacture of boracic acid in the United States was begun only in 1896. (*b*) Calculated on basis of refined borax.

In a new German process* of preparing either boracic acid or borax from calcium borates, the mineral, finely powered, is mixed with water to a paste and hydrofluoric acid and carbonate of sodium are added. Calcium fluoride is quickly precipitated and the boracic acid or sodium borate may be obtained in good crystals on evaporating the filtered liquid. The reaction that takes place is as follows:

$$Na_2O(B_2O_3)_2+(CaO)_2(B_2O_3)_3+4\ HFl=2\ CaFl_2+Na_2O(B_2O_3)_2+3\ B_2O_3+2\ H_2O.$$

THE COLEMANITE DEPOSITS OF CALIFORNIA.

The colemanite deposits 12 miles northeast of Daggett, in the Mojave Desert, occur in a borate formation 100 ft. or more in width, and traceable for fully 10 miles over two detached groups of hills, and presumably passing under the intervening plain. The greater portion of the belt or formation consists of strata of clay, in some places more or less permeated with boracic acid, the leading constituent of the borax of commerce. At the easterly end of this belt there occur in the formation two well-defined lodes of white crystalline colemanite (borate of lime), containing from 15 to 50% anhydrous boracic acid. Colemanite is readily dissolved by carbonate of soda, the resulting crystal being borax. The mineral occurs in shoots throughout the seams, ranging from a few inches to 12 ft. in width, and extending for two miles along the formation, which here is otherwise barren. The deposits are very irregular and pockety; but as they are known to extend to a depth of 400 ft. and there is so great an extent of unexplored territory in which it is probable that mineral exists, the quantity available is undoubtedly large.

This portion of the great borate belt is the property of the Pacific Coast Borax Co., and is at present the principal source of supply of borate material in this country. The production of the mines upon it is constantly increasing, being at present between 1,600 and 2,000 tons per month. Of this

---

* Schuster & Wilhelmy of Görlitz. D. R. P. 94,050, Feb. 19, 1897.

amount, 400 to 500 tons of the richest mineral goes to England, 200 to 400 tons to New York, and the remainder to the company's factory at Alameda, Cal. Four 20-mule teams and a traction engine haul the mineral from the mines to the crushing plant at Daggett. The mineral is extracted through shafts, levels, and stopes, as in a quartz mine. Few if any of the borax-marsh deposits of California and Nevada are worked at present, owing to the abundance of high-grade colemanite in these seams.

Boracic acid is manufactured by only one firm on the Pacific Coast, the Stauffer Chemical Co. of San Francisco, which owns and is developing a large deposit of borate of lime in clay on the great borate formation, six miles north of Daggett, and has a concentrating plant near by from which enriched material is shipped to its works in San Francisco. The ore is treated with sulphuric acid, the boracic acid being thereby set free from the lime. The amount of workable clays at this point is beyond all probable requirements, the deposit being immense, and improving with depth. The stuff mined ranges from 8 to 30% anhydrous boracic acid.

THE WORLD'S PRODUCTION OF BORAX, ETC. (IN METRIC TONS.)

Year.	United States. Refined Borax	Chile. Ulexite, etc.	India. Borax.	Germany. Boracite.	Italy. Boric Acid, Crude.	Peru. Ulexite.	Turkey. Pandermite
1894............	5,962	6,700	367	176	2,746	800	9,081
1895............	6,126	4,582	400	150	2,633	4,000	12,626
1896............	6,649	8,486	....	184	2,616	....	11,875

THE BORAX INDUSTRY OF CHILE AND PERU.

Workable deposits of calcium borate occur extensively in Northern Chile, but of these at the present time only Carcote and Ascotan are worked extensively and rationally. The reason that the others, especially Pedernales and Maricunga, are not exploited is lack of communication and the general difficulty of mining in the provinces of Antofagasta and Atacama.

Ascotan and Carcote are situated near the Bolivian boundary, not far from the railway from Antofagasta to Bolivia, respectively 361 and 411 km. from Antofagasta. The Ascotan deposits are worked by the Empresa de Ascotan, which is the principal producer in Chile. They form the bottom of an old lake and are 25 English miles long and 8 miles wide. The stratum is from 1 to 3 ft. thick. The company is equipped to produce 15,000 tons of calcium borate per annum. Its shipments in 1896 amounted to 6,974 tons. The exports of calcium borate, calcined borax, etc., from Chile are given in the following table (in metric tons):*

Year.	Calcium Borate.	Calcined Borax.	Year.	Calcium Borate.	Calcined Borax.	Year.	Calcium Borate.	Calcined Borax.	Year.	Calcium Borate.	Calcined Borax.
1885.....	1,869	94	1888....	1,132	538	1891....	6,342	808	1894....	6,700	*Nil.*
1886.....	200	1,519	1889....	3,670	*Nil.*	1892....	2,908	108	1895....	4,425	107
1887.....	1,453	3,053	1890....	3,536	37	1893....	4,587	*Nil.*	1896....	8,486	*Nil.*

* From a German Consular Report.

BROMINE.

The total production of bromine in the United States in 1897 was 487,149 lb. against 550,285 lb. in 1896. The falling off is attributed to the coal miners' strike, which caused a general disturbance of industrial conditions in the Ohio Valley during the summer. Otherwise there was no change in the bromine industry or in the market, except an advance of 2c. per lb. in the price, which is controlled by agreement among the producers. Of the production in 1897, 356,949 lb. was in the form of liquid bromine, and the remainder as bromide of potassium, calculated upon the bromine tenor of the latter. There has been no progress in the bromination and bromocyanogen processes of gold extraction as substitutes for chlorination and cyanide lixiviation, and consequently there has been no increased demand for bromine in that direction.

PRODUCTION OF BROMINE IN THE UNITED STATES.

Year.	Michigan.	Ohio.	Pennsylvania.	West Virginia.	Total.	Metric Tons.	Value.	
							Total.	Per Pound.
	Pounds.	Pounds.	Pounds.	Pounds.	Pounds.			
1893	42,565	113,575	111,408	80,852	348,395	158	$87,100	25c.
1894	29,116	146,501	100,623	103,304	379,544	172	98,655	26c.
1895	30,280	152,360	104,647	107,567	394,854	179	102,662	26c.
1896	42,000	212,850	154,600	149,835	559,285	249	143,074	26c.
1897	147,256	124,972	116,967	97,954	487,149	221	136,402	28c.

H. Daubigny, in concert with P. Rivals, has devised a procedure for the decomposition of the bromides, founded on the action of a mixture of permanganate and a soluble salt of copper.* He has sought for a practical means of deciding if this decomposition is complete at a given moment. This has been found in fluoresceine paper. The fluoresceine paper is obtained very easily. Fluoresceine is prepared by heating for three hours the desired proportions of orthophthalic acid and resorcin, to 190° to 200° C.; it is purified, and then treated with pure acetic acid at 40° to 30° C. Into the filtered solution the paper is plunged, and allowed to dry. To use this paper it is moistened, when the least trace of bromine gives a distinct rose color. Organic matter must be excluded.

---

* *Comptes Rendus*, 125, No. 18.

CALCIUM CARBIDE AND ACETYLENE.

By Alfred H. Cowles.

The gas fraternity, the world over, has been thrown recently into a fever of speculation over calcium carbide, its properties, its cost, and the chemical compounds that may be formed through its aid, among which is acetylene, with its brilliant flame threatening to revolutionize the great light industry. Calcium carbide is produced in the electric furnace by the action of the heat of large electric currents upon a mixture of finely granulated lime and coke. The accepted chemical reaction involved in its formation is:

$$\underset{(56)}{CaO}+\underset{(36)}{3C} = \underset{(64)}{CaC_2}+\underset{(28)}{CO}$$

Thus the theoretical proportions of lime and carbon required for the production of 100 lbs. of calcium carbide are 97½ lb. of lime and 56½ lb. of carbon. As a result of the reaction 43¾ lb. of carbonic monoxide gas pass away from the furnace, burning in the air.

Properties.—The calcium carbide so produced, when cooled, is a hard crystalline body. Its color varies from bluish-black to reddish-brown. It is opaque. There are no known solvents for it. Its electrical conductivity is not definitely known, but it approximates to that of carbon. Its molecular weight is 64 and its sp. gr. from 2.22 to 2.26. It may be submitted to the action of a powerful gas flame without exhibiting fusion or change. Under the influence of electric heat it may be softened and even made to melt. In an atmosphere of nitrogen it may be highly heated without decomposition, but when heated in an atmosphere of oxygen it readily ignites and burns, forming calcium carbonate, with a strong development of light. Its heat of formation, as given by Forcrand,* is —0.65 calories, according to the kilogram centigrade system.

Upon adding water to calcium carbide there is an immediate foaming evolution of the hydrocarbon gas, acetylene. The reaction which takes place is as follows:

$$\underset{(64)}{CaC_2}+\underset{(36)}{2(H_2O)} = \underset{(74)}{Ca(OH)_2}+\underset{(26)}{C_2H_2}$$

From this it may be seen that 100 lb. by weight of pure calcium carbide will react with 56.2 lb. of water and produce 40.6 lb. of acetylene gas and 115.6 lb.

---

* *Comptes Rendus*, No. 120, p. 482.

of calcium hydrate, or 1 lb. will produce 5.93 cu. ft. of gas at 60° F. and 30 in. barometric pressure, weighing 0.406 of a lb.

Calcium carbide may also be decomposed by bringing it in contact with snow.

Commercial calcium carbide evolves about 5 cu. ft. of acetylene. This smaller production is due to certain small amounts of lime, carbon, and some other impurities which it ordinarily contains.

When treated with water in a closed vessel properly cooled, according to Messrs. Willson and Suckert, acetylene gas continues to be evolved at a pressure exceeding five atmospheres. The carbide readily abstracts moisture from the atmosphere, but its hardness and density protect it from slacking to a degree, so that in large masses it does not deteriorate as fast as might be expected. A large lump slowly turns white over its surface, due to the gradual formation of a layer of hydrate of lime, which in the course of a few days or weeks, according to the humidity of the atmosphere, will penetrate to the center of the lump. Upon slacking a mass of calcium carbide of 85% purity, Dr. F. J. Wing found that 1 lb. yielded 756 British thermal units of heat. This is about 1¾ times as much heat as lime evolves upon slacking.* Calcium carbide abstracts moisture readily from alcohol, acetone, and liquified ammonia, rendering the last named anhydrous.†

Dr. H. Schweitzer of New York has shown that when the carbide is treated at a red heat with dry hydrochloric acid it is decomposed with the formation of free carbon and small quantities of a yellow substance easily soluble in ether. When treated with steam at different temperatures up to 428° F., and different pressures up to 35 atmospheres, the material was decomposed with the formation of small quantities of the same yellow substance, but not in sufficient amount for further examination.

Benzol, nitrobenzol, phenol, aniline, toluidine, and many other organic compounds give no reaction when treated with the carbide of calcium alone, nor when in the presence of water at various temperatures and pressures.

Calcium carbide has never been produced directly from lime, excepting by the aid of the very intense heat attainable with the electric current. James, in a lecture before the British Society of Arts, has told of an attempt made by him to produce calcium carbide in an oxyhydrogen furnace. He failed to make the carbide even when he used a solvent for the lime, so that there was no doubt that it came in contact with carbon.

History.—Calcium carbide was first made by Wöhler in 1862.‡ In 1860 Caron had succeeded in making an alloy of zinc and calcium in considerable quantity by fusing together calcium chloride, zinc, and sodium. The existence of calcium itself in lime had been proved through the classic researches of Sir Humphry Davy with the great battery of the laboratory of the Royal Institution in 1808. By heating Caron's calcium zinc alloy with carbon to a high temperature, Wöhler succeeded in producing a black amorphous mass which he found would decompose on contact with water, forming calcium hydrate and acetylene, which he stated to be the same carburetted hydrogen gas as had been discovered by Edmond Davy, a close

---

* *American Gas Light Journal*, March, 1896. † J. J. Suckert, *Journal Franklin Institute*, March 17, 1895

‡ *Ann. Chem. Pharm.*, Vol. CXXIV., p. 220.

relation of Sir Humphry Davy, in 1836. The latter at that early time had produced acetylene by adding water to a carbide of potassium accidentally formed during the process of producing potassium by heating in a retort a mixture of potassium carbonate and carbon. The acetylene gas which Davy produced was named by him klumene.[*] Added interest was given to Wöhler's discovery because of the work of the great French chemist, Berthelot, who rediscovered this gas previous to 1860, made its composition and properties known to the world, and gave it its present name of acetylene.[†] Berthelot produced the acetylene in his early work from organic products and caught it in the form of a precipitate of acetylide of copper (C_2H_2, Cu_2O) by passing hydrocarbon gases containing it in small proportions through a solution of ammoniacal cuprous chloride. From this compound he was enabled to liberate acetylene by the action of acid on it, and in 1855 he produced the wonderful result of changing acetylene first into ethylene (C_2H_4), then into ethylic alcóhol (C_2H_5OH), and from the latter into ether and other organic products;[‡] but he had started from the compound C_2H_2. It was still producing an organic product from an organic product. It was the synthesis of words into a sentence, but not of letters into words and then into sentences. Berthelot apparently was not familiar with Edmond Davy's early experiment, which was a synthesis of acetylene from hydrogen and carbon. Wöhler's production of calcium carbide, therefore, gave added interest to Berthelot's work, for it enabled the building up of complicated organic substances in an experimental manner from inorganic products and elements. It, together with Berthelot's difficult synthesis of hydrogen and carbon into acetylene through the agency of a high tension electric arc between carbon points,[§] unlocked the door between inorganic and organic chemistry, that was formerly closed to chemists. It enabled and pointed out the way how to build up from the inorganic elements highly complex organic bodies. At the great exhibition in 1862 a bottle of alcohol thus prepared from acetylene was exhibited. A few years later Berthelot propounded his highly plausible hypothesis, to the effect that petroleums are formed at deep-seated points in the earth's crust by water or steam coming into contact with metallic carbides, thus producing hydrocarbon gases which are polymerized to petroleum by heat and pressure.[‖] All this early work was in the domain of pure science.

In 1886 began the first commercial application of electric smelting. In that year the Cowles Electric Smelting and Aluminum Co. completed a 1,200 h. p. plant, operated by water power, at Lockport, N. Y., for the purpose of manufacturing possible products of the electric furnace. In 1887 a similar plant was erected at Milton, near Stoke-on-Trent, in England, by the Cowles Syndicate Co. The latter was reorganized in December, 1894, into the British Aluminum Co. In 1888 Thomas L. Willson began a series of experiments relating to the reduction of refractory metallic oxides by carbon in an electric furnace, and he erected, through the aid of financial support given him by J. Turner Morehead,

---

[*] *Ann. Chem. Pharm.*, Vol. XXIII., p. 144; *Brit. Ass. Rep.*, 1836, Part II., pp. 62, 64; *Thomson's Records*, Vol. IV., 1836, pp. 821, 823.

[†] *Ann. Chim. Phys.*, (3) LXVII., 52; (4) IX., 413; XIII., 143.

[‡] *Ann. Scientific Discovery*, 1856, p. 268; 1864, p. 181.

[§] *Comptes Rendus*, Vol. LV., p. 640.

[‖] *Ann. Scientific Discovery*, 1868, p. 188.

an electric smelting plant at Spray, N. C. His experiments and work were first largely in the direction of the manufacture of aluminum bronze, but later he produced calcium carbide.

The *Revue Generalé des Sciences*, in 1895, quotes M. Henri Moissan as disputing the claim of Thomas L. Willson to priority for the commercial preparation of calcium carbide, and since that date there has been considerable discussion in the technical papers, particularly of France and England, over this point. The French publications have made many ill-advised although patriotic attempts to claim the discovery for France and for this celebrated French chemist. M. Moissan stated that his first researches in electrical reverberatory furnaces with movable electrodes were published in the *Comptes Rendus* of December 12, 1892, and that he then demonstrated the reduction by carbon, under the action of electric heat, of oxides previously regarded as incapable of reduction, citing the oxides of uranium, manganese, and chromium, and the accidental formation of calcium carbide. It was not until well into the year 1893 that he made a careful investigation of this interesting product, calcium carbide. The writer is loath to disparage the careful and brilliant investigations that M. Moissan has given to the products of the electric furnace. In justice, however, to Thomas L. Willson, to whom the great credit of interesting the world in the subject of calcium carbide is due, he calls attention to the following publications in relation to the Cowles electric furnace:

Paper by Prof. Charles Mabery, Eugene H. Cowles, and Alfred H. Cowles before the American Association for the Advancement of Science, August 28, 1885; paper by Eugene H. Cowles, "The Production of Aluminum and Its Alloys and the Electric Furnace," before the Franklin Institute, published February, 1886; "Report of the Committee of Science and the Arts on the Process and Furnace for the Reduction of Refractory Ores and the Production of Metals, Alloys and Compounds Invented by Eugene H. and Alfred H. Cowles," *Journal of the Franklin Institute*, July, 1886; paper by Prof. T. Sterry Hunt, before American Institute of Mining Engineers, September 16, 1885; paper by Alfred H. Cowles before the Boston Society of Arts, February 11, 1887.

In these publications all that bears upon the subject of metallic carbides produced in Moissan's furnace, as described by him in December, 1892, were described by the writer's brother, himself, and his associates between the years 1884 and 1887. At these early times the smell of acetylene mystified us, but such mystification did not teach the world that this strange gas was knocking for entrance as a new and economical source of light, heat, and power. It was left for Mr. Willson to accomplish this. Lord Kelvin, on October 3, 1892, acknowledged the receipt of a sample of calcium carbide sent him by Mr. Willson September 16, 1892. Carbide of calcium had been made by Mr. Willson long before this, and mentioned in his American patent applications. In his letter to Lord Kelvin, Mr. Willson says: "The great affinity of the combined calcium for oxygen enables this material to decompose water rapidly, liberating hydrogen combined with carbon, which upon ignition burns." There can, therefore, be no doubt that Mr. Willson is to be credited with priority over M. Moissan.

Development of the Industry.—Until the summer of 1897 two factors had retarded the more rapid development of the calcium carbide production and the introduction of acetylene for lighting. The first was the difficulty found in securing a burner for pure acetylene that would not smoke under long-continued use. This difficulty was overcome by the invention of the Napheys burner in Philadelphia, and another by a firm in Chicago. The second factor was official restrictions placed upon the use of acetylene and the storage and shipping of calcium carbide.

In the latter part of the year 1896 the few plants that were manufacturing calcium carbide found a ready sale for all they could produce at prices ranging from $80 to $100 per ton, but in February, 1897, calcium carbide was classed under the Petroleum Acts in England because of an unwarranted fear in the public mind developed through explosions which had taken place in experiments with liquefied acetylene. The public knew that this substance had something to do with calcium carbide, and evidently thought they were "pretty much of a muchness," and made no distinction between then. In July, 1897, the regulations placing it under the Petroleum Acts in England were so modified as to permit 5 lb. of calcium carbide to be purchased and kept without a license. The insurance companies on the continent had refused to grant policies in cases where calcium carbide was kept in buildings, but in May they began to do so under certain restrictions. In England during the early part of the year the insurance companies had absolutely refused to permit the gas to be used. The same condition of affairs existed largely in this country, but underwriters have been brought gradually to look at the subject in a more reasonable light through their investigations into the real properties of calcium carbide and acetylene, and at the close of 1897 we find the market demand for calcium carbide rapidly extending both in America and in Europe. Frank H. Mason, U. S. Consul-General at Frankfort, who has written a valuable consular report on this subject, writes to the author under date of December 2, 1897, as follows: "One fact you can, however, accept, viz., that the present supply in Europe is inadequate to meet the demands, and production will increase so long as present prices are maintained."

In the United States calcium carbide is being produced at the following places: At Niagara Falls by the Acetylene, Light, Heat and Power Co. of Philadelphia. In the early part of the year it had about 1,000 h. p., which was increased to 3,000 h. p. in August, 1897. It has a 5,000 h. p. installation, and expects soon to put in furnaces to utilize it all, as its orders had so increased at the close of the year as to seem to justify such an enlargement.

At Sault Ste. Marie, Mich., is located the Lake Superior Carbide Works, which are owned by a company doing business in Chicago and Cook County, Ill. At present its plant has a capacity to turn out 12,000 lb. of carbide per day, though the water-wheels and buildings are erected for a 24,000-lb. daily production, and electric furnaces are being put in place for such larger output.

At Appleton, Wis., the Illinois Acetylene Co. has a small plant which, at the close of the year, was putting out 2,500 lb. of calcium carbide a day.

The small original Willson Works, at Spray, N. C., have been destroyed by fire, but the Willson Aluminum Co. is just completing, at Holcomb Rock, Va., a new plant of 2,400 h. p., and the writer is informed that the American Carbide Co. has in contemplation the erection of a 12,000 h. p. plant on the New River, at Hinton, in West Virginia.

The works of the Cowles Electric Smelting and Aluminum Co., at Lockport, N. Y., ceased producing calcium carbide during the winter of 1896-97 on account of its water power being temporarily shut off because of the State work of deepening the Erie Canal, and during the summer of 1897 the Acetylene Co. of Washington, which was securing its supply from Lockport, found it could buy it equally cheap at Niagara Falls, and therefore the work was not resumed. The work on the Erie Canal will be completed during the winter of 1897-98, and there will be about 2,000 h. p. available at this plant for the production of calcium carbide.

In Canada Thomas L. Willson has operated a 1,500 h. p. plant at St. Catharines.

In Europe the largest producer in 1897 was the Aluminium Industrie Actien Gesellschaft, at Neuhausen, Switzerland. It derived its water power from the Falls of the Rhine. The works are equipped with dynamos for 5,000 electrical h. p., but most of the power is engaged in the production of aluminum. U. S. Consular Clerk C. H. Day of Berlin, in a consular report, is authority for the statement that this company is at present supplying 132,000 lb. of carbide annually to the Prussian State Railways, to be used to purify and enrich oil gas for the illumination of railway cars as well as stations, shops, and other buildings. Across the Swiss line in Germany, as the writer is informed by Jules Neher of Neuhausen, this same company has, during the year, erected a 16,000 h. p. plant at Rheinfelden. In November, 1897, its selling price of carbide capable of producing from 300 to 320 liters of acetylene per kg. for lots of from 1 to 1,000 kg., was 60 centimes per kg., which equals $115.80 per metric ton (2204.6 lb.), and for lots of from 1,000 to 5,000 kg., 50 centimes per kg., or $96.50 per metric ton, and for lots of 5,000 kg. or over 45 centimes per kg., or $86.95 per metric ton. There are added small charges for packing.

An electric light plant at Geneva, Switzerland, is devoting its surplus power to the production of calcium carbide. Its daily production is said to be about six tons.

In Prussia calcium carbide has been produced at the Electro-Chemische Werke at Bitterfield.

The use of carbide is extending most rapidly in France. Works are erected, or in course of erection, at the following places:

St. Michel (Savoie), Schilienne (Isère), St. Beron (Savoie), Lancy (Isère), Chapareillon (Savoie), Epierne (Savoie), Nôtre Dame de Briançon (Savoie), La Batie (Savoie), Bellegarde (Ain), Froges (Isère), and La Praz (Isère).

In Italy there are works at Terni.

The only company producing carbide in England is the Acetylene Illuminating Co., whose offices are at No. 62 Queen Victoria St., London. This was the first company in Europe to begin the manufacture of calcium carbide. Its work up to date has been largely of an experimental nature. It began with a small steam plant in 1895. F. G. Worth, the manager, writes the author that its plant at Foyers, Scotland, at the works of the British Aluminum Co., is capable of turning out about 16 tons of carbide a week, though it is not selling that quantity at present (December 4, 1897). He says: "In view of the probable future enormous demand we intend to make provision at an early date for a large increase of output at permanent works to be constructed elsewhere than at Foyers, with a capacity of 5,000 or 6,000 tons a year, and where the conditions will be such as to allow the cost of manufacture to be reduced to the lowest limit." The price for carbide as charged by this company was £16 per long ton for fairly large quantities in December 1897. By January 1898, this price had advanced to £20.

Calcium Carbide Production.—It is impossible to secure the statistics of European output for the year 1897 with any degree of accuracy, but the restricted demand for calcium carbide in the early part of the year, and even through the summer months, undoubtedly resulted in a smaller production than the capacity of the plants would indicate.

In the United States the production for the year was: Sault Ste. Marie, 600,000 lb. ($21,000); Appleton, 450,000 lb. ($15,750); Niagara Falls, 2,800,000 lb. ($98,000)—total, 3,850,000 lb. ($134,750). In Canada the production was: * St. Catharines, 1,200,000 lb. ($42,000). In England the production was: * Foyers, Scotland, 801,000 lb. ($28,035).

The December, 1897, list selling price of calcium carbide, in tin packages encased in wood, f. o. b. Niagara Falls or Sault Ste. Marie, was 3¾c. per lb. for 1,000 lb. and over; 4½c. per lb. for quantities under 1,000 lb.; sample packages containing 50 lb., 6c. per lb. A special price of $70 a ton was made on carload lots. In January, 1898, this price had advanced to $81 a ton, due to the demand exceeding the supply.

Cost of Calcium Carbide.—Much speculation has taken place as to the cost of production of calcium carbide. This, of course, is a variable figure dependent upon many conditions, such as the size of the plant employed in its production, the cost of the power, the cost of the lime and coke, and the continuity of operation of the plant. The report made by a commission formed of Prof. Edward J. Huston, Dr. Arthur E. Kennelly, and Dr. Leonard P. Kinnicutt, to the *Progressive Age*, in April, 1896, throws much light on this subject, and little can be added thereto. They reported that at the Spray works in North Carolina, which were capable of producing only 2,000 lb. of calcium carbide a day, which carbide was capable of evolving on an average 4.696 cu. ft. of pure acetylene per lb., the cost was $32.76 per short ton, including all items such as interest on investment, water power, labor, materials, etc. This is equal to $3.48 per 1,000 cu. ft. of pure dry acetylene.

With a plant of 10,000 lb. gross output of carbide per day, favorably located and running 300 days in the year, allowing $5 per year for the cost of horse power at the turbine shaft, their estimate made 2,000 lb. of average gross carbide cost $20.04, which is equivalent to $2.13 as the cost of 1,000 cu. ft. of pure dry acetylene. Their estimates were based upon the actual efficiency of a small plant whose furnaces they found producing 9.372 lb. of carbide per electrical horse power per day, each pound giving on an average 4.696 cu. ft. of gas. Hence the equivalent in dry acetylene, which they found was 44 cu. ft. per electrical horse power per day.

---

* Partially estimated.

The output attained by more recent and improved furnaces averages as high as 54 cu. ft. of acetylene per electrical horse power per day. At both Niagara Falls and Sault Ste. Marie economies have been effected by the introduction of labor-saving devices.

In connection with the output of calcium carbide and acetylene per day per electrical horse power it is interesting to note the efficiency that has thus far been attained in operating electric furnaces. Walter R. Addicks, in the *American Gas Light Journal*, about March 1, 1896, made a calculation on thermochemical data of the amount of energy that is absorbed in the production of calcium carbide, as follows:

ESTIMATE OF THE ENERGY THEORETICALLY REQUIRED TO MAKE CALCIUM CARBIDE ACCORDING TO THE FORMULA:

$$\underset{(56)}{CaC} + \underset{(36)}{3\ C} = \underset{(64)}{CaC_2} + \underset{(28)}{CO}.$$

Heat required:	Disassociation of CaO (Julius Thompson)	−131.70 cal.
	Formation of CaC_2, *Comptes Rendus*, No. 120, p. 482 (Forcrand).	− 0.65
		−132.35 cal.
	Association of CO yields	+ 28.60
	Net heat required	−103.75 cal. for 64 g.

103.75 cal. $\times \frac{1,000}{64} = 1,621.1$ cal. for 1 kg. (2.2 lb.) CaC_2. 746 Watt hours = 647.7 cal. $\frac{1,621.1}{647.7} = 2.50$ E. H. P. per kg., or 1.13 E. H. P. per lb. per hour.

To raise CaO from 0° to 3,000° C. requires 0.0108 cal. × 3,000° = −32.40 cal.

$32.40 \times \frac{1,000}{64} = 506.2$ cal. for 1 kg. (2.2 lb.) CaC_2.

$\frac{506.2}{647.7} = 0.78$ H. P. per kg., or 0.35 E. H. P. per lb. CaC_2 per hour.

$1.113 + 0.35 = 1.48$ E. H. P. hours per lb. of pure carbide of 5.94 cu. ft. C_2H_2 at 60° F. and 30″ mercury, or 5.53 cu. ft. at 32° F.

NOTE.—1 cal. = 3.96 B. H. U. ∴ 1 E. H. P. H. = $\frac{33,000 \times 60}{772} \div 3.96 = 647.7$ cal. 746 Watt hours = 1 H. P. H.

24 E. H. P. hours should produce 16.22 lb. pure carbide.

Again consider now the two formulæ $(CaO + 3\ C = CaC_2 + CO)$ and $(CO + CaC_2) + (H_2O)_2 = C_2H_2 + Ca(OH)_2 + CO$.

Heat obtained:	CaC_2 slacked to form C_2H_2 yields		30.15 cal.*
	Burning C_2H_2 yields		315.70
			345.85 cal.
	Burning CO yields		68.20
			414.05 cal.
We obtain from the			
	$CaO + H_2O = Ca(OH)_2$	18.10	
	$3\ C + 3O_2 = 3\ CO_2$	290.88	
			308.98
			105.27 cal.

NOTE.—There has been considerable discussion in regard to the heat value from burning acetylene. Thompson gives 310.75. If it were 313.70, then our result (105.27) would become 103.75, or the electric energy put into the process, as determined by the preceding paragraph. We see from above that the heat of slacking is nearly 10% of the heat of the gas burning, and this amount (30.15) is equivalent to $30.15 \times \frac{1,000}{64} \times \frac{2.2 \times 1.8}{2.2} = 848.25$ B. H. U. per lb. of carbide treated with water.

Mr. Addicks, in the foregoing calculation, has neglected the heat that would be necessary to raise 36 g. of carbon 3,000°. Assuming the specific heat of carbon constant for variation in temperature, this would be $0.036 \times 3,000 \times 0.22 = 23.66$ cal. absorbed. It is undoubtedly fair that this should be omitted, for in the electric furnace process a portion of the heat that is stored in the highly heated calcium carbide and carbon monoxide is given to new material that is constantly being fed to the furnace, while these two products are cooling down at points away from the center of reduction; hence to the extent that heat energy is thus reused, electrical energy is economized, and allowance should be made for the same. It is also to be noted that the temperature 3,000° C. of the reaction is not definitely known, but has been assumed by Mr. Addicks.

He found that were all the heat generated from the electric current utilized in heating the mixture of lime and carbon, then one horse power, operat-

---

* Dr. Wing finds this figure to be 30.70.

ing one day, should produce 16.22 lb. of pure calcium carbide. As each pound of pure carbide is capable of producing 5.93 cu. ft. of dry acetylene gas, this would be equivalent to a production, per electrical horse-power day, of 96.17 cu. ft. of acetylene. The above figure, 54 cu. ft. of acetylene, is 55.8% of this latter figure. Therefore we may assume that the electric furnace in producing calcium carbide, including the leads that run to it from the dynamos, has attained approximately an efficiency of 58.8% as an average result. Some runs do much better than this. More experience will, undoubtedly, still further heighten this efficiency, and contribute toward the cheaper production of calcium carbide. We may look for an additional cheapening of the cost of production through the introduction of some method of pre-heating the charge before the electric heat is brought to bear upon it. The attainment of moderate temperatures through the combustion of fuel, when the heat is effectively applied, is much more economical than securing the same heat energy from electricity, but in working with the highest temperatures the reverse becomes true, and electric heat is far the cheaper; but in the latter case a combination of the two methods will probably prove far cheaper than either alone, and could a blast furnace and an electric furnace, for example, be successfully combined, we might hope to see calcium carbide produced at figures under $10 a ton.

Impurities.—The impurities in commercial calcium carbide may be classed under two heads: Those non-decomposable by water, and hence having no effect upon acetylene when generated by contact with water, and those decomposable by water, and a source of impurity to acetylene.

Under the first head may be placed free graphitic carbon; hard fine crystals of silicide of carbon (SiC), known as carborundum; metallic carbides and silicides, originating from metallic oxides in the coke and lime employed; and alloys of copper with silicon and calcium, the copper sometimes coming from the melting of electrode holders. Some of the latter compounds while not decomposable by water alone are decomposable by the action of water and acid, and will liberate siliciuretted hydrogen which is spontaneously inflammable.

Under the second head are calcium phosphide, which gives up, under action of water, phosphuretted hydrogen; aluminum sulphide, yielding sulphuretted hydrogen; free calcium, yielding free hydrogen; and metallic nitrides, yielding slight quantities of ammonia. The last is the slowest to be decomposed by water, and after the calcium carbide has become entirely slacked, and all the acetylene has passed off, small quantities of ammonia frequently continue to be evolved.

H. Le Chatelier says:* "The study of the impurities of carbide of calcium is interesting on account of the indications it can give as to the reciprocal affinities of certain bodies when heated to a temperature of about 2000° C.

"After calcium and carbon, the two most abundant elements present are silicon and iron. It is possible that definite combinations of either of these bodies may exist with each of the other three. Which are those, we may ask, which are formed by preference at the temperature of solidification of calcium carbide?

"The iron, which is the least abundant of the four elements under consideration, might be entirely saturated by one or the other of the remaining three.

---

* *Bull. Soc. Chim.*, Series 3, XVII., XVIII., Nos. 16, 17.

As a matter of fact it is combined exclusively with the silicon. It is detected by treating the hydrated carbide with an acid and suspending the insoluble residue in iodide of methyl. Small crystals of silicide of iron are precipitated. These have been studied by H. Moissan, and by analysis they have been proved to be $SiFe_2$.

"The excess of silicon combines either with the carbon or with the calcium, according to the relative proportions of these two bodies; if the quantity of carbon present is in excess of the calcium a silicide of carbon is formed, crystallizing apparently in hexagonal plates, and generally of a blue color. It is found with the excess of graphite floating on the surface of the iodide of methyl. If, on the contrary, the quantity of calcium is in excess of the quantity of carbon present, a silicide of calcium is formed, which is disseminated throughout the mass of the carbide in the form of metallic grains, having the color and luster of zinc. These can be isolated by rapidly quenching the carbide in a large excess of cold water, separating by levigation the coarser residues, and washing them for a few moments with a solution of acetic acid. The final residue is composed of silicide of iron, and of the coarsest grains of silicide of calcium, which have withstood the rapid washings intended to isolate them. In such a case there would be neither graphite nor silicide of carbon present, for the reason that the calcium must be in excess to allow of the formation of silicide of calcium. In fact, the determining affinities which govern the combination of these elements are those of iron for silicon and of calcium for carbon. These are first satisfied, and the remaining bodies combine among themselves in a manner varying according as one or the other is in preponderating proportion.

"There seem to exist two distinct silicides of calcium; one of them is hardly attacked by nitric acid, but is, on the contrary, easily attacked by hydrochloric acid, with the formation of an insoluble yellow matter, called *silicone* by Wöhler. The other, easily attacked by nitric and acetic acids, gives, with hydrochloric acid, a deposit not yellow but white, which, like *silicone*, is soluble in potash, with an abundant disengagement of hydrogen.

"In the attack of silicide of calcium we more frequently get the yellow and white compounds together. The analysis of these mixtures leads one to suspect compounds between those corresponding to $Si_2O_4H_4$ and $Si_2O_3H_4$. For example, one analysis gave: Yellow matter, 0.52 g.; hydrogen given off (0° and 760 mm.), 630 c.c.; silica, 0.57 g.; which corresponds exactly to the second formula.[*]

In connection with the foregoing it is instructive to call attention to the monoxide of silicon, SiO, first described in 1888 by Charles F. Mabery as a product of the electric furnace,[†] and also to the experiment of Dr. D. Chalmot.[‡] By heating a mixture of silica, quicklime, and carbon in such proportions as to produce the substance $CaSi_2$ in the electric furnace he obtained chiefly calcium carbide, containing some silicide; but by reducing the proportions of carbon, and increasing that of silica, a silicide of metallic appearance was produced. The substance contained some carbide and considerably more silicon than would be needed for the above formula, iron silicide also being present.

Calcium Carbide as a Reducing Agent.—The *Chemical News* states that re-

---

[*] *Bull. Soc. Chim.*, Series 3, XVII., XVIII., Nos. 16, 17.

[†] *American Chemical Journal*, IX., p. 14.

[‡] *Ibid.*, 1896, XVIII., p. 319.

searches of a somewhat lengthy description, which have lately been carried out at the Liverpool Research Laboratory, involve the use of calcium carbide as a metallurgical reducing agent. In the first instance an excess of litharge was heated in a clay crucible to redness in contact with the carbide, the reaction being accompanied by vivid incandescence, resulting in the formation of metallic lead and calcium oxide, CaO. A further portion was now selected, in which the proportion of carbide exceeded that of the litharge; this was further subdivided into various smaller portions, each portion being exposed to various temperatures, resulting in a regulus of calcium and lead of varying percentage, together with the expulsion of carbon monoxide.

The alloys thus formed are all more or less brittle, and to a certain extent sonorous when struck, their melting point ranking below that of pure lead, and are slowly, but completely, decomposed in contact with aqueous vapor, the reaction being much less energetic than that afforded by alloys of lead with the alkaline metals. Stannic oxide, cupric oxide, and also ferric oxide, at corresponding higher temperatures, were readily reduced, yielding results of no practical value; in the case of the copper alloys, those samples containing under 1% of calcium were rendered cold-short and broke under very small strain; while, on the other hand, iron containing calcium approaches ferro-manganese in appearance, being even more brittle, and very oxidizable in contact with water.

In a further operation, oxides of manganese, nickel, cobalt, and even chromium, molybdenum, and tungsten were rapidly reduced, yielding calcium alloys. Results of experiments comprising the reductive action of the carbide upon the earthy chlorides and other haloids will be shortly at hand. The already partial success of these reactions seems to point most conclusively toward a new and powerful reducing agent, which, at the same time, considering the market value of the carbide in question, could not fail to replace both sodium and potassium.

Alcohol from Calcium Carbide.—At a meeting of the Academy of Science in New York, in April, 1897, there was described a striking modification of M. Berthelot's old process of producing alcohol synthetically. By the new process acetylene is formed in the presence of nascent hydrogen, by combining calcium carbide, zinc, and diluted sulphuric acid. This results in the production of ethylene (C_2H_4), which on coming in contact with hot concentrated sulphuric acid forms ethyl sulphuric acid, which is changed to alcohol and sulphuric acid on the addition of water. It was claimed that a 96% alcohol can probably be manufactured in this way for 14c. per gal. This last statement is open to doubt, for were all the acetylene generated from pure calcium carbide utilized in the transformation, it would theoretically require from 10 to 11 lb. of calcium carbide to produce 1 gal. of alcohol. Inasmuch as the zinc sulphate formed could probably be utilized and the sulphuric acid remaining could be largely used over and over again, the proposed process is a promising one, and the field open for its operation is almost limitless.

The generation of acetylene for illuminating purposes has in it such great possibilities that an article on calcium carbide would not be complete without a presentation of the properties and the methods of utilizing this interesting gas.

Properties of Acetylene.—Pure acetylene burned in the air, when its illuminating value is properly developed, emits a light greater than that given by any other known gas. Calculated upon the basis of burning 5 cu. ft. per hour, which is the average consumption of an ordinary coal-gas jet, it emits a light equal to from 240 to 248 candle power, according to Vivian B. Lewes, who is the chief gas examiner for the London authorities, and is well fitted to make the foregoing statement. The same result has been found by many other investigators. Thus it is that, when acetylene is burned in suitable burners, its lighting value is from 15 to 20 times that obtained from ordinary coal gas burned at its best in open-flame burners. How to best secure the full lighting value of acetylene, either when burned alone or in conjunction with diluting gases, and avoid both the smoking of the flame, and possible dangers such as are common to inflammable gases, has led to a very great amount of careful investigation, both in this country and in Europe, and finally to a clear insight into the problem, and a thorough knowledge of the properties of the gas.

Acetylene, sometimes called ethine, is an unsaturated hydrocarbon compound of the series C_2H_{2n-2}. It contains in 100 parts by weight, 92.3 parts of carbon and 7.7 parts of hydrogen. In composition it is almost a gaseous coal. The gas is colorless. Its sp. gr. compared to air is 0.91. One liter of acetylene, according to Hempel, at 0° C. and 760 mm. barometrical pressure, weighs 1.16219 g. At 32 F. and 30 in. barometrical pressure, 1 cu. ft. weighs 0.07346 lb. According to experiments made by G. Manouvier and J. Fournier,* the mean of 43 determinations gave the specific heat of acetylene as 1.26. The ratio of its specific heats under conditions of constant pressure and constant volume in accordance with $\frac{C\ P}{C\ V}$ has been found by them to be 1.273, quite different from the ratio in the case of air, but nearer to that of carbonic acid gas (1.29). The heat of combustion of acetylene is very great as compared to other combustible gases. One cu. ft. gives 1,576 British thermal units with the vapor of water produced condensed, or 1,522 with the latter uncondensed; whereas ordinary coal gas gives only from 600 to 700 British thermal units upon burning 1 cu. ft. Its heating value, pound for pound as compared to carbon, is as 1.48 : 1, and its heating value, volume for volume as compared to hydrogen, is as 4.53 : 1. This high heating value renders the gas especially valuable for combustion purposes where a high temperature is to be attained. It enables 1 cu. ft. of the gas to do the work of 3 cu. ft. of coal gas in gas engines.† It has enabled the production of a light 2.5 brighter per unit surface than when coal gas is used in a mantle similar to that employed in the Welsbach burner.‡ It has enabled a chemist in a German assay office to melt nickel with acetylene, employing a Bunsen burner, in 30 minutes where formerly it took 80 to accomplish the same result.

H. Le Chatelier, in a paper before the Academy des Sciences,§ has calculated the temperature of combustion of several mixtures of acetylene with the following results:

Acetylene, 7.74 parts to 100 parts air, gives 2420° C. or 4388° F.; acetylene, 12 parts to 100 parts air, gives 2260° C. or 4100° F.; acetylene, 17.34 parts to 100 parts air, gives 2100° C. or 3812° F. Burned with its own volume of

---

* *Comptes Rendus*, Vol. CXXIV., p. 188; also Vol. CXXIII., July, 1896.

† Paul Chivillard: *Revue Industrielle*, June 19, 1897; A. Von Ihering: *Journal für Gasbeleuchtung*, August, 1896.

‡ *Bulletin Technologique*, June 12, 1897.

§ *Progressive Age*, Vol. XIV., p. 345.

oxygen it will give a temperature of 4000° C. or 7232° F., which is 1000° C. or 1872° F. higher than the calculative temperature of the products of combustion of the oxyhydrogen flame. The products of combustion are carbonic monoxide and hydrogen, both reducing gases. Le Chatelier also found that when he burned a mixture of 7.74 parts of acetylene and 92.26 parts of air in a tube the products formed were carbonic acid gas and water. In mixtures containing from 7.74 to 17.37 parts of acetylene to the total volume, the products of combustion are carbonic acid, carbonic oxide, water vapor, and hydrogen. In the case of mixtures above 17.47 in 100 parts the reactions are incomplete, carbonic oxide, hydrogen, and free carbon being formed, and a certain amount of acetylene remaining unconsumed. He also found that the ignition temperature of acetylene mixed with 35% of air was 482° C. or 900° F., which is much lower than for other illuminating gases, which ignite usually at 600° C. or 1132° F.

Acetylene is a very highly endothermic body. Twenty-four grams of carbon (C_2) uniting with 2 g. of hydrogen (H_2) absorb sufficient heat to raise 58,100 g. of water one degree centigrade, if the carbon employed be in the diamond form; but if the carbon be in the amorphous state then this figure would become 51,400, assuming that the temperature of the reacting products be maintained at 15° C. and the pressure at 760 mm. during the initial and final stages of the operation.* When pure acetylene is heated to 780° C. or 1436° F. it decomposes with a strong evolution of heat and light, thus giving up the heat which it has absorbed in its formation. Prof. Vivian Lewes has pointed out that when acetylene is diluted with other gases the temperature of dissociation increases about 100° C. or 180° F. for each 10% of diluting gas added to it. It is the heat that has become latent in the formation of acetylene which enables it to produce such a high temperature when its carbon and hydrogen contents burn in the air or in oxygen.

Acetylene has a strong smell, and when present in the air, even in such small amounts as not to be determinable by analysis, its odor is very marked. This is of the greatest importance in household illumination as it renders the slightest escape of the gas in a room easily detectible. According to M. P. Villard,† at 32° F. acetylene gas becomes a liquid when submitted to 26.05 atmospheres pressure. It is said to be the lightest known liquid. Its specific gravity varies greatly with temperature. According to Ansell,‡ its gravities at different temperatures are as follows:

Temperature.	Sp. Gr.	Temperature.	Sp. Gr.	Temperature.	Sp. Gr.	Temperature.	Sp. Gr.	Temperature.	Sp. Gr.	Temp.	Sp. Gr.
—7° C.	.460	0° C.	.451	9° C.	.432	20.6° C.	.418	30° C.	.397	35.8° C.	.364
—3° C.	.456	4.4° C.	.441	16.4° C.	.420	26.25° C.	.404	34° C.	.381		

Its coefficient of expansion is probably greater than that of any other known substance. It has been said that some of the explosions that have occurred by using cylinders charged with liquified acetylene have been due to an ignorance of this property, the cylinders having been filled so full that no allowance was

---

* Berthelot: *Progressive Age*, Vol. XIV., p. 538.

† *Comptes Rendus*, June 10, 1895.

‡ *Chemical News*, Vol. XL., p. 136.

made for this expansion. At ordinary temperatures 1 cu. ft. of liquified acetylene weighs about 25 lb. and is capable of evolving about 400 cu. ft. of acetylene gas. One pound of the liquid, on expanding at a temperature of 64° F., produces 14½ cu. ft. of gas at atmospheric pressure. The liquid is said to have a less degree of refrangibility than any other known liquid or solid.

If acetylene in a liquid state be released suddenly from pressure it takes on a solid condition like snow, which may be burned with a sooty flame. This snow is more dense than liquified acetylene, according to Villard, but it floats on water, according to Willson and Suckert. It is therefore probably lighter than water, though the floating might be due to an evolution of gas. A spirit thermometer placed in it is said to show a temperature of —83.3° C. or —118° F. Crystals of solid acetylene, like those of carbonic acid, are said to have absolutely no effect upon polarized light. M. P. Villard* has found the points of liquification of pure acetylene gas slightly greater than those found by Ansell when he investigated the subject in the early eighties. Villard's results are as follows:

Temperatures.		Atmospheres. Pressure	Temperatures.		Atmospheres. Pressure	Temperatures.		Atmospheres. Pressure	Temperatures.		Atmospheres. Pressure
—90° C.	—130° F.	*a*0.69	—60° C.	—76° F.	3.55	0° C.	32° F.	26.05	20.2° C.	68.4° F.	42.80
—85° C.	—121° F.	*b*1.00	—50° C.	—58° F.	5.30	5.8° C.	42° F.	30.30	(*a*) Acetylene (solid).		
—81° C.	—114° F.	*c*1.25	—40° C.	—40° F.	7.70	11.5° C.	52.7° F.	34.80	(*b*) Liquid (boiling point).		
—70° C.	—94° F.	*c*2.22	—23.8° C.	—11° F.	13.20	15° C.	59° F.	37.90	(*c*) Liquid.		

The critical temperature, as determined by Ansell, was 37.05° C. or 98.6° F., at which temperature the pressure was 1,000 lb. Above this temperature the gas cannot be liquified and is governed by the laws of permanent gases. Cylinders have been charged with the gas up to 600 lb. pressure and have been heated to 212° F. when the pressure registered was 4,800 lb.†

Dissociation of Acetylene.—MM. Berthelot and Vieille, the chief engineer of the French explosive department, have recently made extensive investigations on the explosive dissociation of acetylene according to the reaction $C_2H_2=C_2+H_2$, due to a shock or heat applied at one of its points. Their conclusions are as follows:‡

Under pressures less than two atmospheres, decompositions so produced in acetylene do not extend to any notable distance from the center of disturbance; hence there is no danger of using acetylene at ordinary pressures. For higher pressures the disruption extends through the whole mass. The explosive force of liquid acetylene was found to give a pressure of 5,280 atmospheres, or about the same as gun cotton.

The nature of the shock necessary to cause an explosion was studied in various ways. Cylinders containing liquid acetylene were dropped from a height of 59 ft. on a steel anvil without explosion. The same charged to 10 atmospheres pressure did not explode when crushed under a pile driver of 617 lb. weight falling 20 ft., or when subjected to a shock of a bullet moving with sufficient velocity to penetrate one wall and indent the other. An electric spark, a heated

---

* *Comptes Rendus*, June 10, 1895. † *Progressive Age*, Vol. XV., p. 141.

‡ *Proceedings of the Academie des Sciences*, October meeting, 1896.

platinum wire, or the detonation of a fulminate, was found sufficient to cause explosion of the gas or liquid when the pressure was over two atmospheres. They also point out that other causes of danger in industrial operations may result from the phenomena of sudden compression at the time of charging reservoirs of the gas, as well as from the phenomena of adiabatic compression accompanying the sudden opening of a receiver of acetylene into another vessel, and particularly one of small capacity. It has been well established by experiments upon bottles of liquid carbonic acid that the sudden opening of the cock into an attached vessel causes in the latter such a rise of temperature that chips of wood placed in it become carbonized. In the case of acetylene temperatures of this kind might involve a local decomposition capable of spreading through the gas under pressure, and thence into the reservoir. They conclude that compressed gaseous acetylene may be safely handled in cylinders under the same precautions as in the cases of other compressed gases. Liquified acetylene is under the same conditions more dangerous. In this connection Messrs. Berthelot and Vieille say: "We would, however, hasten to add that, in our eyes, the drawbacks do not make up for the advantages which this material presents, and should not limit its use. It is easy to guard against these risks by suitable means, such as, for example, avoiding too rapid a flow of the compressed gas into small reservoirs, also taking care to absorb a portion of the heat produced by the compressions and reactions inside of the apparatus, thus preventing too great an evolution of pressure.

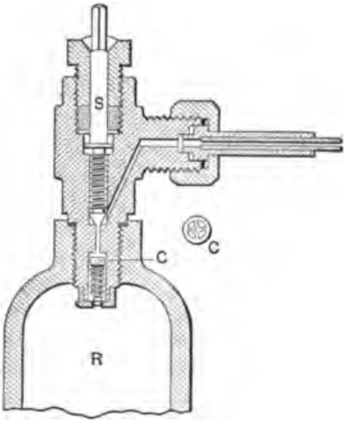

VALVE FOR LIQUEFIED ACETYLENE.

A valve has been described before the Academy designed to correct the danger of suddenly expanding acetylene into a vessel of small capacity. The valve does not allow rapid exit of the gas even by a sudden movement of the screws. In the interior of the valve casing is a check valve *C*, having an exit opening permanent and adjustable. This check valve allows rapid entrance of the gas in charging the reservoir *R*, but prevents its quick outflow.*

Explosive Mixtures.—M. Ravel† places the range of explosive mixtures of

---

* *Progressive Age*, Vol. XV., p. 173. † *Journal de l'Eclairage au Gas*, 1896, pp. 266–268.

acetylene and air as between 4.7 and 57% by volume of acetylene, while the maximum force is developed by a volume percentage of acetylene of 7.8%, or 12.8 volumes of air to one of acetylene. These determinations differ somewhat from Le Chatelier, who has shown that mixtures of acetylene and pure oxygen in large masses to be inflammable must contain more than 2.8% and less than 93% of acetylene, and with air the mixture must contain between 2.8% and 65% of acetylene. In tubes he found these limits contract as the diameters decrease. The following table gives Le Chatelier's results, using mixtures of air and acetylene:

Diameter of Tube. Millimeters.	Limits of Inflammability.		Diameter of Tube. Millimeters.	Limits of Inflammability.	
	Inferior. Per Ct. Acet.	Superior. Per Ct. Acet.		Inferior. Per Ct. Acet.	Superior. Per Ct. Acet.
0.5	No propagation.		6	4.0	40
0.8	7.7	10	20	3.5	55
2.0	5.0	15	30	3.1	62
4.0	4.5	25	40	2.9	64

The velocity of propagation of the flame in large masses of mixed acetylene and air varies with the composition. At the proportion for complete combustion the velocity is about 4.7 m. per second. The maximum is obtained with a slight excess of acetylene, or at 10% acetylene, giving 6 m. per second. This is much in excess of that found in the case of coal gas, and gives to the explosion more of a detonating character.

The report of Le Chatelier's experiments does not state whether his tubes were of metal or glass; but assuming that they were of metal it is apparent that it is not advisable to mix acetylene with air for the purpose of burning the same unless it is done at the burner, or other precautions are taken, for the flame is liable to fire back and explode the contents of the pipes and reservoir, even when burned under pressure. If, however, the mixture were made to pass through bunches of fine metallic tubes, each tube less than 0.02 in. in diameter, mixing the gas with air might become as safe as the present method of burning explosive mixtures of gasoline and air, especially if the mixing is done away from the generator, thus enabling but small volumes of mixed acetylene and air to exist in the supply system. Of course, in such practice it would not be necessary to employ mixtures which give the maximum explosive effect. It has been found that by burning acetylene with air the full lighting value of the acetylene can be obtained without any danger of the flame smoking, but thus far no practical applications have been made of this method of burning the gas. L. M. Bullier,* Vivian Lewes,† W. W. Goodwin,‡ and H. Gordes,§ have all pointed out methods of burning acetylene diluted with other gases without admixture of air, whereby the full lighting value of acetylene is obtained.

Storing Acetylene in Acetone.—MM. Berthelot and Vieille have made some interesting researches in relation to the process of MM. Claude and Hess of storing and transporting acetylene in solutions of acetone.

At a temperature of 15° C. acetone dissolves about 25 times its volume of

---

* English Patent No. 6,101, 1895.

† *London Institute Lecture*, Nov. 25, 1897.

‡ *Progressive Age*, Dec. 15, 1897.

§ *Ibid.*, Oct. 1, 1897.

acetylene. At this temperature one liter of acetone will dissolve about 26 g. of acetylene for each atmosphere of pressure. With increase of temperature this factor lessens. When acetone is thus dissolved under pressure the acetone is attended at 15° C. by an increase of volume of the solution of about 0.04 for each atmosphere increase in pressure. They have found that acetylene dissolved in acetone under pressures less than 10 atmospheres is entirely removed from liability to explosion. A decomposition or explosion started at one point in such a mass will not spread. In attempts to explode such masses the maximum pressures secured were less than one-tenth as great as that corresponding to the decomposition of all the acetylene in the containing vessel.

The acetylene gas above the solution in the containing vessel is, however, liable to explode the same as though the solution were not present, but earlier experiments determined that, in relation to such explosion of the gaseous atmosphere above the liquid, in all cases where the initial pressures are less than 10 atmospheres it will not produce final pressures greater than 90 atmospheres.

In cases where the pressure was raised greatly above 10 atmospheres it was found that the whole mass within the vessels, acetone and all, became liable to explosion, and in some cases the pressure evolved would become as high as 5,000 atmospheres.

An experiment was made with a flask of 13.5 liters capacity which had previously been tested at 250 atmospheres. This received 7 liters of acetone which was then saturated with acetylene at a pressure of about 8 atmospheres. Upon applying heat by means of an incandescent wire, the upper part of the flask became hot to the hand, while the bottom remained cool, showing that only the gaseous acetylene above the acetone solution had decomposed. The pressure rose to 150 atmospheres. The flask was not injured and acetylene was found remaining that was afterward used for other experiments. Upon opening there was found suspended in the acetone a mass of pulverulent carbon.

With increase of temperature it was found that the pressure increases very rapidly within flasks containing solutions of acetylene. Thus in a flask containing 311 g. (376 c.c.) of acetone and 60 g. of acetylene, with a full capacity of 824 c.c., the following pressures and temperatures were observed:

Temperature.	Atmospheres. Pressure.	Temperature.	Atmospheres. Pressure.
7.8° C.	5.42	50.1° C.	13.50
14.0° C.	6.52	59.6° C.	15.77
26.3° C.	8.42	74.5° C.	19.86
35.7° C.	10.21		

From this it is seen that a solution of acetylene, which at ordinary temperatures would be safe, might become explosive when highly heated by the sun; hence it is recommended that a pressure of saturation of not more than from 7 to 10 atmospheres, at a pressure of 15° C., would be found safe in practice.

Under such conditions a flask of one liter capacity charged with 0.7 of a liter of acetone, and with acetylene to 7 atmospheres, would contain safely 127 g. of acetylene. If no acetone were used, and the same flask were charged to a pressure of 10 atmospheres with pure acetylene, it would contain only 11 g. The pressure that would be produced by an explosion would be about the same in both cases, but the chances of such taking place, and the probable disaster should the flask rupture, would be vastly greater with the pure acetylene.

The energy required to compress, and the amount of water to cool a given weight of gas is much less where acetone is used. For the foregoing reasons this method of storing acetylene in solution in acetone gives a practical method of transporting the same and supplying reservoirs from which the gas may be drawn for lighting purposes.

Diluting Acetylene.—H. Gordes, chief engineer of the Julius Pintsch Co. of Berlin, has read an exhaustive paper before the Association of German Technical Engineers,* reporting a series of experiments made by his firm and the Prussian Railway Management upon the explosive properties of acetylene, alone and diluted with Pintsch and coal gas under various degrees of compression; also upon the lighting value of various mixtures. As a result of these experiments the Prussian State Railways are adopting mixtures of Pintsch gas and acetylene for car lighting.

These experiments developed the fact that it was not safe to use pure acetylene, when under heavy pressure, for car lighting. A tank was filled with acetylene under a pressure of 6 atmospheres and connected with a pipe of 0.02 in. bore, and 0.1 in. outside diameter. At a point 59 in. from the tank the pipe was heated by a water-gas flame to a red heat. The tank violently exploded.

At moderate pressure a tank was filled with acetylene, and at a distance of 59 in. a ¾-in. pipe connected with the tank was heated to a white heat, causing only local decomposition of the acetylene within the pipe and no explosion. These results are confirmatory of those secured by MM. Berthelot and Vieille, and disclose that pure acetylene unmixed with air below one or two atmospheres is non-explodable by local application of heat.

With compressed mixtures of 30% acetylene and Pintsch or coal gas, it was found that the temperature that could cause explosion was so high that the fusible solder employed in the joints of the tanks would melt long before the danger point was reached; also that applying high heat to the pipes connected with the tanks would not cause explosion. Hence it was concluded that such mixtures were perfectly safe for train lighting.

Mr. Gordes gives a table of the comparative tests of acetylene, pure and mixed with Pintsch gas and coal gas. This table discloses the following facts: Acetylene, pure, burned in a Bray burner, gives 12.18 times as much light as an equal volume of less pure grade Pintsch gas, burned in its own burner.

Pintsch gas with 10% acetylene added thereto gives 2.5 times as much light per equal volume as pure Pintsch gas. Pintsch gas with 20% acetylene added thereto gives an illuminating value 3.95 times greater than pure Pintsch gas. Pintsch gas with 30% acetylene added thereto gives 4.26 times greater lighting power than pure Pintsch gas. Pintsch gas with 40% acetylene added gives 4.93 times the lighting power of pure Pintsch gas.

These results are not maximum results, but the average secured from testing a large number of burners, and it was pointed out that special burners might

---

* *Progressive Age*, Vol. XV., p. 432.

give higher results. The usual Pintsch gas burner does not show with the mixed gases any unsteadiness or interruptions of any kind.

Mr. Gordes says: "One can well understand how such an improvement in lighting power ought to be looked upon as a tremendous advance. Figuring at the present market price of carbide necessary for a cubic meter (7 lb. of calcium carbide, or 35.3 cu. ft.) of acetylene, in a compressed state, at 50c. per cu. m., or (7c. per lb. for carbide) and Pintsch gas at 10c., then the unmixed Pintsch gas flame (the use of impure gas is supposed), with a consumption of 4.92 liters per candle per hour, will cost 0.078c. per candle.

"Pintsch gas with an admixture of 20% acetylene costs 18c. per cu. m. at the above prices. When the mixture is used there is consumed only 1.65 liters per candle per hour, and the cost of lighting amounts in this case to but 0.048c. per candle. Mixed gas containing 20% acetylene is therefore cheaper than the cheaper grade of Pintsch gas on an illumination basis.

"Mixed gas composed of 50% by volume of acetylene, and 50% by volume of Pintsch gas, costs 30c. per cu. m. It gives 3.4 times the lighting power that is obtained with the unmixed Pintsch gas, and consumes 1.45 liters per candle per hour, and costs 0.0435c. per candle per hour."

When acetylene can be purchased for 25c. per cu. m. (3½c. per lb., or $70 per ton) the calculation in regard to the 50% admixture of acetylene will figure out 0.025c. per candle hour, which is less than one-third the cost of the poorer grades of Pintsch gas. If there is used instead of the impure gas a better article to mix with acetylene, the improvement in lighting power does not amount to threefold increase, but at all events the admixture of 20% acetylene at least doubles the lighting power of the best Pintsch gas. These calculations are based upon using the same kind of a burner that is at present in use in Germany for burning Pintsch gas. Tests show that special types of burners give a greater improvement in the lighting power with the mixed gases than has been used in obtaining these figures of cost.

Prof. Vivian B. Lewes,* in a lecture before the London Institution, November 25, 1897,† made the following statements:

"The great trouble which has presented itself in diluting acetylene with any cheap diluent is that the illuminating power of acetylene is reduced to an enormous extent, and it has been found that hydrogen, carbon monoxide, and water gas are useless for this purpose, as 10% of acetylene mixed with either of them gives a practically non-luminous flame, while if the acetylene is used in sufficient quantity to give a satisfactory light the percentage of acetylene needed is too high to be commercially possible.

"It has been proposed to use air, carbon dioxide, and even nitrogen in order to dilute acetylene down to the limit at which it can be burned in large burners without fear of smoking. When air is used a factor of real danger is introduced, while carbon dioxide is worse than water gas, and nitrogen nearly as bad.

"Feeling strongly that the only way to secure good illuminating effect, freedom from smoking, and safety when compressed for railway and tram lighting,

---

* Professor of Chemistry at the Royal Naval College, Greenwich, and Gas Engineer for the City of London Authorities.

† *Progressive Age*, Vol. XV., p. 600.

was to find a cheap diluent which should maintain the enrichment value of the acetylene at something near the value of the gas when burned alone, I instituted a long and exhaustive series of experiments, and not only found the reason for the failure of water gas, hydrogen, and carbon monoxide, but also discovered that methane was the only gas that would do the work required, and further that the presence of 30% of methane when mixed with hydrogen, carbon monoxide, or water gas, converted it into an excellent diluent with which 10% of acetylene gave a 20 candle-power gas capable of being burned in ordinary gas fittings, distributed through the ordinary mains and pipes, and, indeed, behaving in every way like ordinary coal gas.

"Further researches also showed that dilution reduced the possibility of exploding the gas *per se* well below the limit of safety, as acetylene, which under a pressure of two atmospheres could be detonated at a dull red heat, when diluted had the temperature necessary to bring about explosion raised 100° C. (180° F.) for each 10% of diluting gas mixed with it, so that with a mixture containing enough acetylene to make a brilliant illuminant for compression in cylinders for carriage and tram lighting, a temperature which would melt the metal cylinder would be required to cause explosion.

"Even at the present time there are many small towns and villages where, owing to position and other causes, coal gas costs $1.20 to $1.45 per thousand cu. ft., while hundreds of villages exist where the consumption would not admit of the heavy initial expense of a coal-gas plant. The apparatus needed for making the diluting gas and enriching it with acetylene is comparatively cheap, and 10% of acetylene will give a 20 to 22-candle gas.

"A carbide company starting gas works for villages and small towns could well afford to debit itself with carbide at $50 a ton, which would provide 12,000 cu. ft. of acetylene and the lime needed for purification.

"The diluting gas can be made at 16c. per thousand, but for argument it may be called 24c.; 12,000 cu. ft. of acetylene and 108,000 cu. ft. of the diluent would then cost $74.50 or 62c. per thousand, and adding 22c. a thousand for charges on capital, distribution, profit, etc., the 20-candle gas could be sold at 84c. per thousand. Although there is a very big field for pure acetylene in country-house lighting, I am inclined to think it will be the diluted gas which will offer the largest field for speculative industry."

These facts may prove especially valuable and important to communities in the United States living in districts where natural gas is available, for this is composed almost entirely of methane.

Burning Pure Acetylene.—There are but few burners at present manufactured that can be relied upon to consume it in such a way as to develop its wonderful illuminating power for any great length of time without smoking, and therefore a proper selection of burner is of the greatest importance. What is called the Napheys burner, which is seen in the accompanying cut, practically solves the problem of a burner. It is so made that two jets of acetylene impinge against each other, thus producing a flat flame at right angles to the spread of the two arms of the burner. In most ordinary burners, on continuous use, a little carbon begins to deposit around the orifice through which the gas discharges. This is due to the flame being too close to the burner. It has been found that mixtures of air and acetylene can be burned without encountering this difficulty. The Napheys burner, it will be noted, has little orifices at the back portion of its lava tips which enter a small chamber inside the tip, through which the gas passes, and during this passage some air is sucked in and discharges with the gas. Thereby the burner is practically burning a mixture of air and acetylene, and the pressure behind the gas is regulated sufficiently high to throw the point of combustion some distance away from the lava tips, where the two jets impinge upon each other, thus preventing the opportunity for the carbon to build up around the orifices. For domestic consumption a burner burning more than 1 cu. ft. of acetylene per hour gives too intense a light to be practically useful.

Ed. Hospitalier, before the Société Internationale des Electriciens,* gives the quantity of heat given off and the net cost of lighting by the principal illuminants: *Stearine Candles*—Produce 1.2 candles. Consumption 120 to 150 grains per hour at 18c. per lb. *Carcel Lamp*—Consumes 463 grains of pure colza oil per hour at 13c. per lb. *Petroleum Lamps*—Consume 48 grains per candle hour at 56c. per gal., or 8c. per lb. *Gas Burners*—$1.70 per thousand cu. ft. Renewals of incandescent mantels are not included in the net cost. *Incandescent Lights*—3 watts per candle, 20c. per thousand watt hours. *Acetylene*—125 cu. ft. for $1, or $8 per thousand, or 12c. per lb.

NAPHEYS' ACETYLENE BURNER.

On this basis the following results were obtained, the figure following each illuminant representing the cost per hour per 10 candles, and the next figure in parenthesis the heat in B. T. U. given off per hour per 10 candles:

Stearine candles, 4.16c.; oil lamp, 9.9c.; petroleum, 0.56c. (1,240); gas candle (7.3 ft. per 10 candles), 1.25c. (4,300); flat flame burner (4.3 ft. per 10 candles), 0.79c. (2,730); Bengal burner (3.7 ft. per 10 candles), 0.53c. (2,150); Welsbach burner (1.2 ft. per 10 candles), 0.12c. (413); incandescent lamp, 0.53c. (107); acetylene, 0.21c. (306).

The heat given off by different sources of light in proportion to the quantities of light which they evolve is as follows, the first figure being the number of calories (kg-d) per carcel-hour, and the second in parenthesis, the B. T. U. per candle-hour: Ordinary 10-ampère arc lamp, 5 (2); incandescent lamps, pushed,

---

* *Progressive Age*, Vol. XIV., p. 200.

20 (8); incandescent lamps, not pushed, 26 (11); acetylene, 75 (31); Denayrouze burner, 50 (20); Welsbach burner, 100 (41); Bengal burner, 500 (206); flat flame burner, 600 (252); gas-candle, 1,000 (413).

It will be noted that acetylene ranks next to the incandescent lamp in the small amount of heat which it evolves for producing light.

The following table, made by Vivian B. Lewes, shows the relative amount of carbon dioxide that is discharged in a room lighted by various illuminants, including acetylene, to produce therein a light equal to 48 candles, which may be taken as that necessary to light a fair-sized London dining-room. In the last column is given the number of adult human beings that would exhale an equal amount of carbon dioxide.

Illuminants.	Gas Consumed.	CO_2.	Adults.	Illuminants.	Gas Consumed.	CO_2.	Adults.
Sperm candles (48)	....	20.0	32.7	London gas, Argand burner	15.00	7.9	13.1
Paraffine lamps	....	13.6	22.5	Acetylene	1.25	2.5	4.5
London gas, Burner No. 5	22.90	12.1	20.0				

Thus, it will be seen, to produce the same light effect acetylene vitiates the air to only one-fifth the extent of ordinary coal gas.*

Acetylene Lamps.—Last year a series of exhaustive tests were conducted under the direction of Mr. E. Stine, who was early known in connection with the development of the Welsbach light in this country, with a view of developing portable lamps wherein calcium carbide should be made to displace oils. Such lamps are now on the market and include designs for all possible uses. All are very simple in operation and require little attention. The gas is generated very slowly by the dripping of water upon calcium carbide contained in a small tin cartridge within the chamber of the lamp. The water, by a nicely regulated valve, is admitted just as fast as the generated acetylene is consumed. When the water valve is closed generation ceases. The dangers of the coal-oil lamp entirely disappear with non-combustible calcium carbide displacing oil. Among the lamps is a bicycle lamp which is very striking on account of the brilliancy of the light it emits. Acetylene has the valuable characteristic, different from all other illuminating gases, of being able to supply very small but brilliantly luminous points. A bright spherical flame as small as 0.1 in. in diameter may be burned, consuming as little as $\frac{1}{10}$ cu. ft. per hour of the gas. This property of the gas enables its application to bicycle lamps.

The lamp referred to is 4½ in. in height and weighs 18 oz. The cartridges of carbide with which it is charged weigh 2 oz., which supplies the small single-jet flame with sufficient gas to give a four candle-power light for four hours, when a new cartridge may be slipped into the lamp. It is anticipated that we will send or telephone our orders for the requisite supply of cartridges, specifying their sizes, to be sent up from the corner grocery. The power of the acetylene light to penetrate a fog or mist has been determined by Prof. Vivian Lewes.† He shows that acetylene light loses 14.7%, while the Welsbach incandescent light loses

---

* *American Gas Light Journal*, Jan. 4, 1897.

† Lecture before the Naval Architects, London, April 8, 1897.

20.8%, and the electric arc 26.2% in penetrating fog or mist. This is another quality that renders acetylene particularly fitted for bicycles and carriage side lights, as well as for ships at sea and buoys.

It is interesting to compare the cost of this method of lighting to other portable lights. Assuming calcium carbide capable of evolving 5 cu. ft., and that acetylene will eventually become as cheap as 2½c. per lb., the following table can easily be calculated from well-known data:

Illuminants.	Consumption Per Hour.	Light Evolved Candle Hours.	Price.	Candle Hours for a Cost of One Cent.
Stearine candles	135 grains.	1.20	18c. per lb.	3.45
Paraffine candles	122 grains.	1.46	7½c. per lb.	11.16
Carcel lamp	463 grains.	9.60	13c. per lb.	11.28
Kerosene, Argand burner	106 pints.	15.00	12c. per gal.	94.50
Acetylene, in small burners	1 cu. ft.	50.00	5c. per cu. ft.	100.00

Toxic Effects of Acetylene.—Previous to 1896 reports of researches made as to the poisonous properties of acetylene were few and disagreed in their conclusions. This was due to the great difficulty in securing the gas in quantity. In that year Dr. Rudolf Rosemann* published a very elaborate investigation of this subject. A translation of this paper appears in the *Progressive Age*, March 1, 1896. In *Comptes Rendus*, Vol. CXXI., p. 564, N. Grehart publishes a paper upon the same subject. The conclusions arrived at by Rosemann were:

"A very long time and very large quantities of acetylene are necessary to bring about symptoms of sickness, and finally death, to such animals as he experimented upon.

"Comparing acetylene with ordinary illuminating gas he found that the latter acts more quickly and more energetically upon animals, and that they are killed more quickly with illuminating gas than with acetylene.

"Acetylene is much less poisonous than carbon monoxide and less than illuminating gas.

"He could detect no difference between purified acetylene and the unpurified in their effects; and he concluded that the impurities in the commercial product were so diluted that their effects were practically *nil*.

"As a first sign of acetylene intoxication of the animals he experimented upon he regularly observed a gradually increasing sleepiness."

As to the manner in which acetylene acted upon the organism, it is almost sure that acetylene does not influence the coloring matter of the blood as does carbon monoxide. Acetylene is absorbed by the blood in the lungs without changing the same directly, and circulating with the blood acts upon the organism.

N. Grehart placed a dog in a mixture of acetylene with air and oxygen, so formed that it contained 20% oxygen and 20% acetylene. At the end of 35 minutes the dog showed no signs of distress. Blood which was taken from the dog after this experiment, and its contents of acetylene determined, showed the presence of 10 c.c. of acetylene to 100 c.c. of blood. A dog exposed to a mixture containing 40% acetylene and 20% oxygen for 55 minutes died after it had

---

* *Journal of the Pharmacological Institute of the University of Greifswald.*

breathed 112 liters of the gas. A dog lived for 27 minutes in a mixture containing 79% acetylene.

L. Brocuir,* in discussing Grehart's paper, stated that, "Spectroscopic investigation of blood containing acetylene does not increase our knowledge, shows no changes from normal blood, and is reduced in the usual manner by ammonium sulphohydrate. Should any connection between acetylene and the white blood corpuscles exist it is not very stable, and not at all to the same extent as holds with illuminating gas."

The foregoing results agree with those obtained by Dr. Frank and Dr. Weil, who in 1895 claimed to have found the proof that acetylene does not possess the poisonous properties attributed to it.† They found that mice and rabbits could remain in a 4% acetylene atmosphere without exhibiting any evil effects.

Purifying Acetylene.—The elimination of impurities from acetylene has been ably investigated by A. Berge and A. Reychler,‡ and the following methods suggested: *Hydrogen sulphide* is readily removed by passing the gas through a solution of caustic potash or caustic soda, from which the sulphur may be precipitated by copper sulphate as a black copper sulphide, if its gravimetric determination is desirable. *Phosphuretted hydrogen* can be removed by bromine water, though this is not of commercial advisability. The method proposed is to pass the gas through a solution of chloride of mercury—water, 80 parts; hydrochloric acid, 20 parts; chloride of mercury (corrosive sublimate), 8 to 12 parts—the acidity of which prevents the precipitation of chloride of mercury by acetylene. This makes a perfect separation; the yellowish white precipitate formed may be boiled with dilute nitric acid and converted again into chloride of mercury by adding a little hydrochloric acid; thus no loss in mercury results and nothing is used up but acids.

Then the complete process would consist in (1) passing the gas through a solution of caustic soda, removing all the sulphuretted hydrogen, which can easily be converted into barium sulphate for analytic determination, then (2) passing it through a solution of mercuric chloride, treating the sediment with nitric acid to convert it into phosphoric acid, which can be quantitatively determined if so desired by the Sonneuschein molybdate of ammonium and magnesia method. The sulphur and phosphorus determinations in two samples gave the following results:

	No. 1.	No. 2.
In one cubic meter of acetylene H_2S.....	1,082 cu. cm.	1,417 cu. cm.
In one cubic meter of acetylene PH_3......	945 cu. cm.	985 cu. cm.

These impurites, if not removed, would eventually attack metals.

---

* *Comptes Rendus*, Vol. CXXI., p. 773.

† *National German Gazette*, June 15, 1895.

‡ *Bulletin de la Société Chimique de Paris*, Feb. 27, 1897; Vols. XVII.-XVIII., No. 4.

CEMENT.

THE condition of the cement industry in the United States in 1897 is shown in the following tables, in which the most striking feature is the enormous increase in the manufacture of Portland cement, especially in New York, New Jersey, and Pennsylvania. The causes which have contributed to the great development of this industry are described in detail in the exhaustive paper by Mr. Lewis, which is appended. In connection with the cement industry reference should also be made to the very important paper on cement manufacture in Great Britain by Messrs. Stanger and Blount, which was published in the THE MINERAL INDUSTRY, Vol. V.

PRODUCTION OF PORTLAND CEMENT IN THE UNITED STATES.

(In barrels of 400 lb.)

States.	1896.			1897.		
	Barrels.	Value at Works.		Barrels.	Value at Works.	
		Total.	Per Barrel.		Total.	Per Barrel.
California	8,985	$17,970	$2.00	17,060	$51,180	$3.00
New Jersey	270,858	400,999	1.48	440,454	641,421	1.45
New York	266,482	445,594	1.67	361,994	592,676	1.64
Ohio	163.182	320,364	1.96	147,332	291,640	1.98
Pennsylvania	825,000	1,225,000	1.49	1,200,000	1,740,000	1.45
South Dakota	23,776	47,552	2.00	39,900	75,810	1.90
Texas	15,000	38,000	2.53	7,778	19,912	2.56
Other States (*a*)	4,000	7,000	1.75	58,453	108,850	1.86
Total barrels	1,577,283	$2,502,479	$1.59	2,272,971	$3,521,489	$1 55

(*a*) Includes Arkansas, Illinois, Michigan, and Utah.

The manufacture of slag cement was begun in the United States in 1897 by three concerns, namely: the Illinois Steel Co. of Chicago, the Knickerbocker Cement Co., and the Standard Silica Cement Co., while the Maryland Cement Co., of Sparrows' Point, Md., and at least one other concern made preparations to enter the business. The Illinois Steel Co., which was the largest producer, is carrying on the manufacture at its North Works. The slag issuing from the blast furnaces is granulated by water and after a preliminary pulverization through an 80-mesh sieve is ground in tube mills so that 95% of the product will pass through a 200-mesh sieve.

PRODUCTION OF NATURAL HYDRAULIC CEMENT IN THE UNITED STATES.

(In barrels of 300 lb.)

States.	1896.			1897.		
	Barrels.	Value at Works.		Barrels.	Value at Works.	
		Total.	Per Barrel.		Total.	Per Barrel.
Illinois	246,755	$86,364	$0.35	500,000	$175,000	$0.35
Indiana and Kentucky	1,434,337	504,049	.35	1,539,818	615,927	.40
Kansas	171,017	109,747	.64	140,661	56,226	.40
Maryland	188,050	95,846	.51	180,000	70,000	.39
Minnesota	53,098	26,591	.50	81,731	40,865	.50
New York:						
Ulster County	3,497,594	2,518.393	.72	3,402,261	2,099,912	.61
Onondaga County	102,816	52,881	.51	90.625	51,106	.56
Schoharie County	28,465	20,898	.73	27,000	16,600	.62
Erie County	955,970	553,027	.57	880,050	460,253	.52
Ohio	32,319	24,795	.77	26,085	21,341	.82
Pennsylvania	312,041	185,397	.59	458,857	274,834	.59
Virginia	3,749	2,249	.60	12,384	7,430	.60
Wisconsin	356.400	178.200	.50	400,000	200,000	.50
Other States (a)	24,700	17,525	.71	42,455	37,630	.89
Total barrels	7,407,311	$4,385,962	$0.59	7,781,377	$4,127,124	$0.53

(a) Includes Georgia, Tennessee, and Texas.

CEMENT PRODUCTION, IMPORTS, EXPORTS, AND CONSUMPTION IN THE UNITED STATES.

(In barrels of 300 lb.)

Year.	Production.				Imports.		Exports.		Consumption.	
	Natural Hydraulic.	Portland.	Total Barrels.	Value.	Barrels.	Value.	Barrels.	Value.	Barrels.	Value.
1892..	8,211,181	547,440	8,758,621	$7.152,750	3,254,183	$3,878,824	107,894	$169,538	11,905,000	$10.361,543
1893..	7,445,950	673,989	8,119,939	6,063,131	3,565,582	3,470,169	112,518	174,663	11,573.451	9,358,737
1894..	7,895,259	738,196	8,633,455	5.478,051	3,540,820	3,396,729	120,967	180,881	12,137.955	8,859,708
1895..	7,694,053	998,745	8,692,798	6,027,374	3.996,520	3,873,123	95.559	131,541	12,676,798	9,931,572
1896..	7,407,311	2,103,044	9,510,355	6.888,441	3,561.160	3.394.426	69,632	108.315	12.195,959	9,869,700
1897..	7,781,377	3,030,628	10,812,005	7,648,613	2,787,760	2,688,122	61,759	103,389	13,538,006	10,233,346

IMPORTS OF CEMENT INTO THE UNITED STATES ACCORDING TO SOURCE.

Year.	Belgium.		British North America.		France.		Germany.	
	Short Tons.	Value.	Short Tons.	Value.	Short Tons.	Value.	Short Tons.	Value.
1894	107,426	$654.642	1,239	$11,938	3,175	$20,084	209,361	$1.391,643
1895	141,775	865,687	2,083	18,894	4.567	27,842	259,984	1,737,442
1896	140,197	818,887	2,006	17.272	6.532	38.317	246,666	1,629,785
1897	109,580	649,675	981	9,311	7,545	41,574	221,856	1,467,845

Year.	United Kingdom.		Other Countries.		Total.		Exports.	
	Short Tons.	Value.	Short Tons.	Value.	Short Tons.	Value.	Short Tons. (a)	Value.
1894	200,780	$1,255.575	9,142	$62,847	531,123	$3,396,729	18.145	$180.881
1895	161,376	1,014,816	29,693	208,942	599,478	3.873,123	14,334	131.541
1896	126,267	806,550	12,056	86,615	534,174	3,894.426	10.445	108,315
1897	68,869	451,256	9,388	65.461	418,104	2,688,122	9,264	103,389

(a) Estimated from number of barrels reported; at 1 bbl. = 300 lbs.

THE MANUFACTURE OF HYDRAULIC CEMENT IN THE UNITED STATES.

BY FREDERICK H. LEWIS.

I. HISTORICAL AND STATISTICAL.

THE use of calcareous mortars is very old. "Introduced already by the Egyptians in the joints of their immense edifices, lime mortars were applied by the Greeks to more varied usage. Following these people, the Romans (the only people whose writings on this subject have reached us) in their constructions made a continuous use of lime, and its principal properties they appear to have known. Thus St. Augustine describes in his *City of God* the phenomena which accompany the slaking of quicklime, and Pliny and Vitruvius treat in their works of the different modes of application to which it is susceptible. Without stopping to describe some strange mixtures, we note only a custom to which Pliny ascribed, not without reason, the good condition of mortars made before his time, and by virtue of which the ancient laws prohibited contractors from using lime until it had three years' slaking.*

"Besides sand, and sometimes even to the exclusion of the latter, the Romans generally used with lime fine particles of burnt earth or volcanic cinders coming from Pouzzola, at the foot of Vesuvius, and which they called *pulvis putolaneus.* These materials, especially the latter, rendered mortars capable of hardening under water, a fact which Pliny and Seneca described with an exaggerated admiration."

But in spite of such ancient use of hydraulic cement the industry producing such products is entirely a development of the present century, and nine-tenths of it the growth of the last forty years. So, too, rational explanations of the phenomena involved belong to nineteenth-century science, and have only attained a reasonably satisfactory basis within the last ten years. The manufacture of hydraulic cement is then a recent industry, and in America only a partially developed industry, as yet inadequate to supply home markets.

The development of the theory and the art of making cement has been so often and so fully set forth that only the most salient facts will be noted here, in order to afford convenient reference to them. In 1791 John Smeaton published in England a *Narrative of the Building, etc., of the Eddystone Lighthouse,* and in it he described the series of experiments on hydraulic mortars which he made about 1756 for the purpose of determining the best mortar for the lighthouse. Finding that some limes were much better than others, he "was very desirous to get some light into some of the sensible qualities that might probably occasion the difference, or at least be a mark of distinction." He learned a simple method of analysis, conducted a considerable series of tests, and as a result records the conclusion that "in containing a considerable quantity of clay I have found all water-limes to agree." This, it is true, was not an explanation, but it was the essential fact quickly determined by simple inductive processes. Numerous investigators dealt with the subject early in the nineteenth century, and a number

---

* Feret, *Étude Spéciale des Matériaux d'Agrégation des Mortiers.* Paris, 1897.

of hypotheses were advanced variously attributing the hydraulic effect to iron, to manganese, and even to magnesia.

In 1813 Collet-Descotils, mining engineer and professor in the École des Mines, at Paris, called attention to the fact that the silica found in limestones, which is insoluble in acids, *became soluble when the limestone was calcined at a red heat.* He deduced from this that the silica combined with the lime during calcination, and that this was the reason for the hydraulic properties of certain limestones. This was the correct explanation of hydraulicity.

In 1818 L. J. Vicat, the distinguished French engineer, placed the whole subject on a rational basis by the publication of his *Recherches expérimentales sur les Chaux de Construction, les Bétons et les Mortiers ordinaires.* Vicat continued to be the leading authority on this subject until his death in 1861.

The first patent for cement manufacture was taken out by Parker, in England, in 1796, for a "certain cement or terras to be used in aquatic and other buildings and stucco-work." He gave it the misleading name of Roman cement, but it was essentially what is known now as natural-rock cement.

In 1818 St. Leger took out a French patent for making hydraulic lime by calcining a mixture of chalk and clay, a process which is said to be continued by one French works until this day. In 1822 James Frost took out an English patent for "a new cement or artificial stone;" in 1825 he established works on the Thames, and became the first manufacturer of artificial cement. In 1824 John Apsdin took out the Portland cement patent, described as an "improvement in the modes of producing an artificial stone," and called it Portland cement, from the similarity in appearance of this artificial stone to a building-stone much used in London which was quarried on a bold headland extending out into the English Channel, known as the Portland Bill.

The growth of the Portland cement industry abroad has been chiefly in the Thames and Medway districts of England, where the raw materials are the soft white and gray chalks with river-mud; in Northern and Western Germany, employing chiefly soft chalks and marls with suitable clays; in Southern Germany, Austria, and Switzerland, employing usually hard limestones; and in Northern France, where chalks, marls, and clays are used.

Prior to 1860 the industry abroad was a small one, but at the present date (end of 1897) the European production is estimated to be fully 30,000,000 barrels per annum, as follows:

Germany	14,000,000	Denmark	420,000
England	8,750,000	Norway	90,000
France	2,400,000	All others	1,840,000
Russia	1,750,000		
Switzerland	750,000	Total	30,600,000
Sweden	500,000		

Austria, Roumania, and Portugal also manufacture Portland cement, but statistics are lacking. The Austrian product is said to be large.

In America, water-lime rocks were first discovered in 1823. At this time the Delaware & Hudson Canal was under construction through Ulster County, N. Y., and a lime which was burnt from certain rock strata near the village of Rosendale was found to set and harden under the action of water, instead of slaking as ordinary limes do. During the progress of the early public works, chiefly canals, similar discoveries were made accidentally at other places. Thus water-lime rocks were found in Western and Central New York, in the Lehigh Valley in Pennsylvania, in the James, the Potomac, and the Ohio River valleys, and natural-rock cements were made in all these localities at comparatively early dates. The early development of manufacture was entirely in these lightly burned natural-rock cements.

At the present time there are manufactures of natural-rock cement in 14 states, operating something like 100 plants, conducted by 70 different manufacturing firms or companies. The localities, number of concerns manufacturing, etc., are as follows:

NATURAL-ROCK CEMENTS.

District of Locality.	Number of Concerns.	Approximate Annual Output in Barrels.	Per Cent of Total.
Rosendale District, Ulster County, N. Y....	15	3,500,000	41.9
Louisville District, Kentucky and Indiana..	15	1,750,000	20.9
Pennsylvania District, Lehigh Valley.......	6	750,000	8.97
Erie County, N. Y.......	4	550,000	6.59
Illinois....................................	2	550,000	6.57
Milwaukee District, Wis.....................	1	475,000	5.68
Maryland and West Virginia	5	275,000	3.28
Schoharie and Onondaga District, N. Y....	10	200,000	2.39
Kansas.........................	2	140,000	1.68
Minnesota..................................	2	85,000	1.02
Ohio.....................	3	35,000	0.42
Virginia.................................	3	20,000	0.24
Georgia..............	1	15,000	0.18
Texas.................	1	15,000	0.18
Total....................	70	8,360,000	100.00

It will be seen that the Rosendale district in New York produces about 42% of the total output, and the three districts in New York State about 51%. This is on the basis of quantity of product. In value of product the New York State quota is at least 60% of the whole, and the State easily holds a leading position in this manufacture.

The actual total production of natural cement as reported for recent years is as follows: 1882, 3,165,000 bbl.; 1885, 4,000,000 bbl.; 1890, 7,308,734 bbl.; 1891, 7,607,067 bbl.; 1892, 8,211,181 bbl.; 1893, 7,445,950 bbl.; 1894, 7,895,259 bbl.; 1895, 7,694,053 bbl.; 1896, 7,407,311 bbl., and 1897, 7,781,377 bbl. This enormous product of natural-rock cement is unequaled in any other country; nowhere else is there anything like it. In Europe the nearest approach to it is in France, where there is a very large production of both hydraulic limes and hydraulic cements, estimated, all told, at about 6,000,000 to 7,000,000 bbl. per year; of this perhaps 2,000,000 bbl. is natural-rock cement.

The pre-eminence of the United States in this manufacture is unquestionably due to the excellence and abundance of the raw materials. It will be seen that the maximum production was in 1892. The product has since been less and the price lower. There is also a rapidly growing Portland-cement industry which seems likely to check further rapid growth of the natural-cement industry, and may even to some extent displace the natural product.

The first manufacture of Portland cement began experimentally at Coplay, Lehigh County, Pa., in 1872. Mr. David O. Saylor and his associates of the Coplay Cement Company, having been manufacturing natural-rock cement at

Coplay for several years prior to this date, began an investigation to demonstrate the practicability of making Portland cement from their raw materials. They first produced (in 1875) a grade of cement testing over 300 lb. neat at seven days, and in 1876 were awarded a medal for Portland cement at the Centennial Exhibition. A second American Portland cement was also on exhibition at the Centennial Exposition, representing the product of a new plant built at Wampum, Lawrence County, Pa., by Messrs. J. K. Shinn & Brother. It was made from a mixture of fossiliferous limestone, found in the coal measures, with clay.

In 1877 a plant was built at South Bend, Ind., by Messrs. Millen & Sons, and in 1884 the American Cement Co. built works at Egypt, Lehigh County, Pa. Since then the growth of the industry has been rapid. The following list gives the principal works, with the dates of their establishment:

Company.	Brand of Cement.	Locality.	Date of Establishment.
Coplay Cement Co	Saylors, Commercial.	Coplay, Pa	1875
J. K. Shinn & Brother.	Wampum.	Wampum, Pa.	1876
Millen & Sons.	Millen.	South Bend, Ind.	1877
" " "	"	Wayland, N. Y.	1892
American Cement Co.	Giant and Egypt.	Egypt, Pa.	1884
" " "	Giant.	Jordan, N. Y.	1891
Empire Portland Cement Co	Empire.	Warners, N. Y.	1886
Atlas Cement Co.	Atlas.	Coplay, Pa.	1889
Alpha Portland Cement Co.	Alpha.	Whitaker, N. J.	1891, rebuilt 1894.
Western Portland Cement Co.	Western.	Yankton, S. D.	1890
Buckeye Cement Co.	Buckeye.	Bellefontaine, Ohio.	1892
Sandusky Cement Co	Medusa.	Sandusky, Ohio.	1893
Diamond Portland Cement Co.	Diamond.	Middle Branch, Ohio.	1893, rebuilt 1897.
Bonneville Cement Co.	Star.	Siegfrieds Bridge, Pa.	1894
Vulcanite Cement Co	Vulcanite.	Vulcanite, N. J.	1895
Glens Falls Cement Co.	Iron Clad.	Glens Falls, N. Y.	1895
Bronson Portland Cement Co.	Bronson.	Bronson, Mich.	1897
White Cliffs Portland Cement Co.	Setter.	White Cliffs, Ark.	1897

There are small plants also operated by the following companies: California Portland Cement Co., Colton, Cal.; Williamson Portland Cement Co., Deer Park, Ill.; Chicago Portland Cement Co., Chicago, Ill.; Peerless Portland Cement Co., Union City, Mich.; Wayland Portland Cement Co., Wayland, N. Y.; Casadaga Cement Co., Burnhams, N. Y.; Columbus Portland Cement Co., Columbus, Ohio; Art Portland Cement Co, Sandusky, Ohio; Alamo Cement Co., San Antonio, Texas; Portland Cement Co. of Utah, Salt Lake City, Utah.

The total present capacity of existing works (Dec. 31, 1897) is a little in excess of 3,000,000 bbl. per annum, and it seems quite certain that the 1898 product will equal and perhaps exceed these figures. Of this productive capacity fully 70% is found in the great plants of the Lehigh Valley in Eastern Pennsylvania and Western New Jersey, and from 55 to 60% in the Eastern Pennsylvania district alone. Pennsylvania, accordingly, has a similar pre-eminence in Portland cement manufacture to that which New York holds in the natural-rock cement industry.

The Saylors, American, and Atlas companies are enlarging their plants in Eastern Pennsylvania and a new plant is under construction there; the Vulcanite works in New Jersey are being doubled; a new plant is under construction at Castalia, Ohio, and there are a number of new works projected East and West.

The production of Portland cement in America and the importations from foreign countries in recent years are reported as follows:

	1882.	1885.	1890.	1891.	1892.	1893.	1894.	1895.	1896.	1897.
Production*........	85,000	150,000	335,000	455,000	410,580	505,492	558,647	749,509	1,577,283	2,272,971
Imports*...........	370,000	554,000	2,160,000	2,820,000	2,440,687	2,674,149	2,655,615	2,997,390	2,670,870	2,090,820

* Barrels of 400 lbs.

During 1897 the increase in home production reduced prices at the Atlantic seaboard to lower figures than ever before, and since the demand in foreign markets was unusually good, imports fell off considerably. So far as the North Atlantic seaboard is concerned, this state of affairs is quite likely to continue, with the great increase in production of Portland cement in New York, New Jersey, and Pennsylvania, unless importers are prepared to accept considerably reduced prices.

In 1895 the manufacture of hydraulic cement of the Puzzuolana class, using blast-furnace slag, was commenced by the Illinois Steel Co., of Chicago, and this company is now marketing a large product of this cement. A similar enterprise is being established by a Baltimore company, which will utilize slag produced by the Maryland Steel Co.

GEOLOGICAL AND CHEMICAL.

Natural Cement.—The natural cements of America are made from argillaceous limestones, and practically all of them are derived from beds of the Trenton and Niagara limestones (Nos. 2 and 6 of the Pennsylvania geology) in the great Silurian formation.

In New York, Pennsylvania, Maryland, Virginia, Georgia, Kentucky, Indiana, and Wisconsin the natural cement-rocks are all from the same geological horizon; all of them Silurian limestones. For the most part these limestones are magnesian. The following analyses reported by various authorities show in a general way the character of the deposits worked for cement:

	SiO_2.	Al_2O_3.	Fe_2O_3.	$CaOCO_2$.	$MgOCO_2$.	Authority.
	Per Cent.	Per Cent.	Per Cent.	Per Cent.	Per Cent.	
Lehigh Valley, Pa..................	18.10	6.40	1.33	65.00	3.41	Pa. Geol. Rep.
Rosendale, N. Y., av. of dark rock	24.29	4.54	2.19	37.07	26.25	Gillmore.
Cumberland, Md..................	24.74	16.74	6.30	41.80	8.60	"
Erie Co., N. Y.....................	33.80	....	....	35.60	19.26	"
Hancock, Md......................	27.10	....	....	65.00	5.30	"
Louisville, Ky....................	21.10	....	....	54.00	14.70	A. E. Hunt.
Utica Rock, N. Y..................	21.12	....	....	42.25	31.98	Gillmore.
Balcony Falls, Va..................	34.20	7.8	....	31.00	20.00	"
Milwaukee, Wis....................	17.00	4.25	1.25	44.00	25.00	Mfrs'. analysis.

It is evident that with some exceptions most of these rocks would not yield after calcination a normal cement. And in fact there is in manufacturing many of the natural cements a variety of strata worked and blended in grinding, and so much variation in the rocks themselves, that no single analysis of the raw materials in such cases could be considered representative. There is a great deal of sorting of strata in manufacturing, rejecting some and mixing others after calcination to produce the qualities desired. Nor is the selection usually based on chemical analyses, but on practical experience of trial and error. Thus Gillmore describes the mixtures before grinding adopted in a number of cement works, the following mixture employed by one of the Rosendale factories serving as an example :

20% from first quarry, strata 1 to 4, inclusive, rejecting most of No. 3.
60% " second " " 9 to 16, "
20% " third " " 1 to 4, " rejecting No. 3.

So there is a good deal of "artificial" mixing in the so-called natural cements. The purest and most homogeneous deposit, and the one presenting the largest accessible working beds, is the Lehigh Valley deposit in Pennsylvania. This deposit, however, offers such advantages for manufacturing Portland cement, and is being so rapidly developed for this product, that the manufacture of natural cement has taken a secondary place.

The following analyses of natural cements indicate the character of the product of different localities, certain foreign products being given for comparison :

	SiO_2.	Al_2O_3.	Fe_2O_3.	CaO.	MgO.	Authority.
	Per Cent.	Per Cent.	Per Cent.	Per Cent.	Per Cent.	
Lawrenceville	29.00	10.40		32.85	19.92	A. W. Dow, Washington
Norton's Rosendale	24.30	7.22	5.06	33.70	20.94	Booth, Garrett, Blair.
Old Newark Rosendale	24.42	8.16	3.96	36.30	16.98	" " "
Lawrence "	22.77	10.43		34.54	21.85	S. B. Newberry.
Utica, N. Y.	35.48	9.92		33.67	20.98	Gillmore.
Cumberland	28.30	10.12	4.42	49.60	3.76	A. W. Dow.
Milwaukee, Wis	25.16	6.33	1.71	36.08	18.38	Mfrs' analysis.
Lehigh Valley, Pa.	26.50	9.40	2.00	53 50	2.40	Pa. Geol. Survey.
Louisville, Ky. (a)	21.10	7.51		30.16	7.00	
Cumberland	36.60	14.58	5.12	37.50	2.73	A. W. Dow, Washington
"	25.70	12.28	4.22	52.69	1.44	" "
Round Top	30.02	13.55	3.00	44.58	2.76	" "
"	28.36	9.85	3.07	45.04	2.82	" "
Potomac	26.65	12.38	2.14	33.20	12.56	" "
Vassy (French)	22.60	8.90	5.30	52.69	1.15	E. Candlot.
Yonne "	23.40	12.90	3.30	47.70	1.05	"
Argenteuil (French)	29.55	8.35	4.10	47.50	3.85	"
Tsckerkasoff (Russian)	24.29	6.53	5.80	42 10	10.15	"
Sheppey (English)	....	45.60	....	50.30	2.85	Redgrave.
Harwich "	....	47.00	....	48.00	4.00	"

(a) Also carbonate of lime, 25.42%, and sulphate of lime, 6.85%.

Portland Cement.—American Portland cements are made from a variety of raw materials, regardless of their geological horizon. Since the cement is made by an artificial mixture of two or more raw materials, all grades of calcium carbonate are available, provided the addition of other substances will produce normal mixtures. Statuary marbles, limestones more or less pure, marls, chalks, sea-shells, and corals may yield equally satisfactory mixtures, and under suitable conditions any of them may be commercially practicable. So, too, there are many other suitable clay-bearing substances, slates, shales, argillaceous lime-rocks, brick-clays, and river-mud which may be successfully employed. In the Lehigh Valley of Pennsylvania the raw materials are Silurian argillaceous limestones, the same rocks that are employed for making natural cements there. The New Jersey Portland plants employ the same materials. At Glens Falls, N. Y., the Trenton limestone of the Silurian formation, analyzing 85 to 95% calcium carbonate, is mixed with clay. At Warners and Jordan, in Central New York, the raw materials are soft marls and clays, also of the Silurian formation. In Western Ohio, at Sandusky and Bellefontaine, and in Southern Michigan, at Bronson, similar soft marls and clays of the Silurian and Devonian are used. In Western Pennsylvania (Wampum, Lawrence County) and in Eastern Ohio (Middle Branch) hard limestones of the Carboniferous formation are used with clay. At Yankton, S. D., and White Cliffs, Ark., the chalks of the Cretaceous formation yield Portland cement. Thus in theory and practice there is a wide range in choice of raw materials. Yet, while neither the geological position nor physical condition of the raw materials are of essential importance, it must not be assumed that first-class deposits for successful manufacture of Portland cement are numerous. The cement formula is somewhat narrow, and ready access to a market is absolutely essential. Given proper materials and a market, the commercial success of a cement enterprise will then depend entirely on the intelligent adaptation of plant to the raw materials and to the local conditions. There is thus afforded a wide range of choice both of raw materials and plant, and there is opportunity for the exercise of much special technical skill.

The following table gives general analyses of raw materials as reported by the manufacturers or by chemists who have recorded results of analyses:

	SiO_2.	Al_2O_3.	Fe_2O_3.	$CaOCO_2$.	CaO.	$MgOCO_2$.	MgO.	$CaOSO_3$.	SO_3.	Insol.	Water and Organic.
	P. Ct.	P. Ct.	P. Ct.	P. Ct.	P. Ct.	P. Ct.	P. Ct.	P. Ct.	P. Ct.	P. Ct.	P. Ct.
Lehigh Valley, Pa., cement rock	14.68	5.32	1.12	69.26	....	3.67	......	2.29	......	......	1.68 (*c*)
" " " " "	15.40	4.26	1.38	74.66	......	2.66	.....	0.86	......	......	1.88 (*c*)
" " " limestone	5.87	1.59		88.00	......	4.00	......	......	......	......	..... (*d*)
" " " cement mixture	13.97	5.07	1.88	74.10	......	2.04	......	......	......	......	1.82 (*c*)
Lawrence County, Pa., limestone	4.14	0.21	1.77	90.47	......	1.00	......	......	......	......	2.03 (*c*)
Warren County, N. J., cem. mixture	14.16	6.64		73.96	......	3.13	......	.....	......	......	.... (*d*)
Glens Falls, N. Y., limestone	3.30	1.30		.....	52.15	......	1.58	......	0.30	(*a*)	8.87
" " " clay	55.27	28.15		......	5.84	......	2.25	......	0.12		
Warners, N. Y., marls	0.26	0.10		94.89	.....	0.38	......	.....	......	......	4.64 (*d*)
" " clay	40.48	20.95		25.80	......	0.99	.....	......	.....	......	8.50 (*d*)
Sandusky, Ohio, marl	...	1.72		92.70	.....	0.53	......	2.06	......	1.28	1.13 (*d*)
" " clay	64.70	11.90	9.90	.....	0.9	......	0.7	......	......	......	11.90 (*d*)
Bronson, Mich., marl	1.65	......	0.81	90.66	......	trace.	......	......	0.66	......	5.59 (*d*)
" " clay	62.10	20.09	7.81	......	0.65	......	0.96	......	0.49	......	7.90 (*d*)
Yankton, S D., chalk	2.15	2.72		98.72	......	......	......	......	......	......	..... (*d*)
" " "	8.20	7.07		83.59	......	......	......	......	......	......	.... (*d*)
" " clay	57.98	18.26	4.57	......	1.75	......	1.83	......	1.28	......	12.08 (*d*)
Arkansas, chalk	4.42	2.21	1.03	95.29	......	......	......	......	......	......	..... (*e*)
" "	6.09	3.52	1.20	87.93	.....	.....	1.06	......	....	......	.. (*e*)
" clay	53.30	23.29	9.52	......	0.36	......	1.49	......	......	......	5.16 (*e*)
" "	65.12	19.05	7.66	.....	0.34	......	0.81	......	......	......	6.12 (*e*)

(*a*) Co_2 40.98. (*c*) *Pa. Geol. Survey.*
(*d*) Manufacturers' analysis. (*e*) Branner, *Proc. Am. Inst. M. E.*

For comparison, analyses of European raw materials are given as follows:

		SiO_2.	Al_2O_3.	Fe_2O_3.	$CaOCO_2$.	CaO.	$MgOCO_2$.	MgO.	Insol.	Water and Volatile.
		P.Ct.	P.Ct.	P. Ct.	P. Ct	P. Ct.	P. Ct.	P. Ct.	P. Ct.	P. Ct.
English white chalk	From	0.66	......	0.35	98.60	......	0.21	......	......	.. .. (*a*)
" " "	To	1.59	......	0.74	97.90	......	0.10	......	......	..... (*a*)
" gray "	From	1.67	0·93	0.38	96.50	......	0.50	......	......	..... (*a*)
" " "	To	6.84	1.14	0.46	87.85	......	0.10	......	......	.... (*a*)
" cement slurry		11.77	4.45	2.13	69.97	.....	2.87	......	1.24	7.59 (*a*)
" " "		11.83	5.23	1.97	74.18	.....	1.29	......	2.53	1.82 (*b*)
" Medway clay		63.66	16.10	6.74	......	0.81	......	1.73	......	3.38 (*c*)
" Tyne clay		55.83	28.04	7.78	......	......	2.57	.....	.....	..... (*b*)

(*a*) Heath. (*b*) Redgrave. (*c*) Stanger & Blount.

	SiO_2.	Al_2O_3.	Fe_2O_3.	$CaOCO_2$.	CaO.	$MgOCO_2$.	MgO.	SO_3.	Water and Volatile.
	P. Ct.	P. Ct.	P. Ct.	P. Ct.	P. Ct.	P. Ct.	P. Ct.	P. Ct.	P. Ct.
German Hamburg chalk	1.55	0.50		97.50	......	......	0.19	0.20	..... (d)
" " clay	52.50	17.85	5.75	.. ..	4.48	......	3.24	0.94	14.00 (d)
" Stettin marl	19.70	3.66	1.34	73.92	......	0.97	... ..	0.32	..... (d)
" " clay	54.60	18.20	5.40	......	2.80	......	3.16	0 99	13.10 (d)
" Rhine limestone	3.00	0.42	0.53	94.50	......	......	0.86	0.13	.... (d)
" " clay	50.70	19.13	8.37	......	2.68	......	3.20	1.64	13.40 (d)
Belgian Beerse clay	65.50	18.55	6.01	......	0 38	.....	1.18	0.14	..... (e)
" Vise chalk	1.42	0.577		96.80	......	0.45	.....	......	..... (e)

(d) Candlot. (e) Michaelis.

The Portland cement formula is not exact, nor are the limits of variation definitely fixed. In a volume entitled *Der Portland Cement*, published in Berlin in 1892 by authority of the Association of German Portland Cement Manufacturers, analyses of 33 different cements are reported, and the limiting variations for these are given as follows: Lime, 58.22 to 65.59%; silica, 19.80 to 26.45%; ferric oxide, 2.19 to 4.47%; alumina, 4.16 to 9.45%; magnesia, trace to 2.89%; alkalies, 0.19 to 2.83%; sulphuric anhydride, 0.19 to 2.19%.

Candlot, *Chaux et Ciments Hydrauliques*, gives full analyses of 45 cements of French, German, English, and Belgian manufacture and finds them to vary between the following limits: Silica, 20.30 to 26.10%: alumina, 5.20 to 10.60%; ferric oxide, 2.10 to 5.30%; lime, 58.12 to 67.31%; magnesia, 0.33 to 2.30%; sulphuric anhydride, 0.26 to 1.78%.

Dr. Carl Schoch, of Berlin, in his recent book* considers the limits to be about as follows: Silica, 19 to 26%; alumina, 4 to 10%; ferric oxide, 2 to 4%; lime, 57 to 66%; magnesia, 0 to 5%; sulphuric anhydride, 0 to 2%.

The figures are based simply on the facts of actual manufacture, and do not pretend to fix these limits on any reasonable basis. It has been shown by laboratory experiments that Portland cement can be made from lime and silica alone; hence in a certain sense other things may be regarded as impurities. This is by no means practically true as regards alumina and iron, which play important rôles in commercial products, as indeed sulphuric acid also does in the slow-setting cements. Magnesia alone is an impurity performing no useful function and having dangerous possibilities if present in too large proportion.

By general consensus of opinion the work of Prof. Le Chatelier, of the *École des Mines*, at Paris, constitutes the most satisfactory exposition which has yet been made of the combinations which exist in Portland cement and of the reactions which take place when the cement powder is hydrated. Le Chatelier's thesis (entitled *Recherches Experimentales sur la Constitution des Mortiers Hydrauliques*) appeared in the *Annales des Mines*, Vol. XI., and is an admirable experimental investigation, bringing to bear on the subject the resources of chemistry, crystallography, and microscopy. His conclusions were that the principal hydraulic compound in cement was the tri-calcic silicate ($3CaOCO_2$), and that a similar tri-calcic aluminate ($3CaOAl_2O_3$) was probably also formed. Hence he proposed the formula $\frac{CaO}{SiO_2 + Al_2O_3} \leqq 3$ to indicate the extreme limit of lime permissible in

---

* *Moderne Aufbereitung und Wertung der Mortel Materialien*, Berlin, 1897.

sound cements. In this formula the quantities are expressed by equivalents and not by weights. For practical reasons he considered that in commercial products the ratio should be 2.7 instead of 3. This criterion has been very generally adopted. The formula has been modified on theoretical grounds so as to make it include iron, magnesia, and sulphuric acid and provide bases to fix all the acid present; but with the exception of allowing for lime in combination with sulphuric acid there appears to be insufficient data to warrant us in saying that either the iron oxide or magnesia is combined as these modified formulæ assume. Some experiments covering a part of the ground examined by Le Chatelier have recently been reported by Messrs. S. B. and W. B. Newberry to the New York section of the Society of Chemical Industry,* the results of which have led them to believe that the combination of lime with alumina is $2CaOAl_2O_3$. They suggest, accordingly, the formula

$$X(3CaOSiO_2) + Y(2CaOAl_2O_3),$$

in which X and Y are variables depending on the proportions of silica and alumina present in the clay; or, expressed by percentages instead of equivalents,

$$\text{Lime} = 2.8 \text{ silica} + 1.1 \text{ alumina}.$$

The following table gives representative analyses of a number of American Portland cements:

Brand of Cement.	SiO_2.	Al_2O_3.	Fe_2O_3.	CaO.	MgO.	SO_3.	Authority.
	Per Ct.	Per Ct.	Per Ct.	Per Ct.	Per Ct.	Per Ct.	
Alpha	22.62	8.76	2.66	61.46	2.92	1.52	Booth, Garrett, and Blair.
Atlas	21.96	8.29	2.67	60.52	3.43	1.49	" " " "
Giant	19.92	9.83	2.63	60.32	3.12	1.13	" " " "
Saylors	22.68	6.71	2.35	62.30	3.41	1.88	" " " "
Vulcanite	21.08	7.86	2.48	63.68	2.62	1.25	" " " "
Empire	22.04	6.45	3.41	60.92	3.53	2.73	" " " "
Jordan	21.86	7.17	3.73	61.14	2.34	1.94	" " " "
Diamond	21.80	7.95	4.95	61.90	1.64	0.79	" " " "
Sandusky	23.08	6.16	2.90	62.88	1.21	1.66	" " " "
Bronson	20.95	9.74	3.12	63.17	0.75	0.86	Manufacturers' Analysis.
White Cliffs, Ark	22.93	10.33		64.67	0.94	1.05	" "

For comparison the following analyses of European cements are given:

Brand of Cement.	SiO_2.	Al_2O_3.	Fe_2O_3.	CaO.	MgO.	SO_3.	Authority.
	Per Ct.	Per Ct.	Per Ct.	Per Ct.	Per Ct.	Per Ct.	
White Label Alsen	20.48	7.28	3.88	64.30	1.76	2.46%	Booth, Garrett, and Blair.
Dyckerhoff	20.64	7.15	3.69	63.06	2.33	1.39	" " " "
Germania	22.08	6.84	3.36	63.72	1.32	1.82	" " " "
Hemmoor	21.14	6.95	4.01	63.24	1.44	1.47	" " " "
Lagerdorfer	23.55	7.47	2.40	61.99	1.42	1.07	" " " "
Brook, Shoobridge Co	22.20	7.35	4.77	61.46	1.35	1.86	" " " "
Francis	22.18	8.48	5.08	61.44	1.34	1.56	" " " "
Condor	23.87	6.91	2.27	64.49	1.04	0.88	" " " "
Candlot, French	22.30	8.50	3.10	62.80	0.45	0.70	Candlot.
Boulogne, French	22.30	7.00	2.50	64.62	1.04	0.75	"

Generally the European manufacturers (except the English) run their lime from 63 to 65%. In America it is seldom that the lime exceeds 63%. This difference is probably justified by the excellence of the laboratories in the works abroad, which enable manufacturers to keep sufficient check on their mixtures to safely run the lime higher. The French and Belgian cements show the low percentages of sulphuric acid required by standard French specifications.

---

* *Journal of the Society of Chem. Ind.*, Nov. 30, 1897.

The Eastern cements in America show generally more magnesia than the Western, and also generally more than European cements. The maximum percentage in American cements may be considered to be 4%, while in standard foreign brands it is about 2.5%. There was formerly a weight of authority in favor of considering these latter figures as the limit, but in recent years there has been apparent everywhere a reaction of opinion on this point and a general disposition to concede that magnesia had been held responsible for defects in cement-work without good reason. For example, in the case of concrete which failed in the Aberdeen Docks in Scotland it was at first quite generally claimed that magnesia was the cause. But as the facts developed it became apparent that the magnesia came from the sea-water and that the failure of the concrete was due to the use in sea-water of a lean and porous concrete. This is now conceded by everybody.

In American experience there is no evidence whatever to indicate that magnesia up to a 4% limit is detrimental to the product. The early analyses of the Lehigh Valley products made over twenty years ago show exactly the same figures as those reported now. Thus the Pennsylvania Geological Survey's Report D. D. of 1878 gives a series of eight analyses of the cement which had been manufactured for some years by the Coplay Cement Co. These analyses were made by Mr. John W. Eckert (now president of the American Cement Co.), and in them the percentage of magnesia varies from 2.13 to 3.53%, figures corresponding exactly with present analyses. Nothing is on record either in laboratory tests or actual practice during the 20 years intervening to indicate injurious effects from this content of magnesia. The elaborate report on the effects of magnesia made by Mr. Rudolph Dyckerhoff to the German Association in 1895 is by far the best experimental investigation of this subject, and it also showed no disadvantage from magnesia up to a limit of 4%.

It is extremely fortunate that the great water-lime rock deposit in the Lehigh Valley has thus proved of sufficient purity for high-grade Portland cement. The accessibility of the material, the great body of suitable rock, and the uniformity of the different strata make this deposit unique among the argillaceous limestones which have been developed in America, and are advantages which indicate this locality as the greatest producing center in the United States.

American manufacturers of Portland cement have not up to the present time made use of adulterants in placing their cements on the market. There has been at one time or another a good deal of adulteration of cements in Europe by additions of furnace-slag, sand, ragstone, etc. Some of these additions, perhaps a majority of them, are without injurious effect upon the cement *per se* except as dilutants, and the practice may be without objection if the facts are stated and the products sold on their merits. It was necessary, however, for the German Association to declare a few years ago that any addition to Portland cement beyond 2% of calcium sulphate to regulate the setting-time was an adulteration and would not be countenanced by the Association. A similar declaration was made by the Cement Trade Section of the London Chamber of Commerce only last year.

The addition of sulphate of lime up to 2% to produce a slow set is now a general practice in American cement works. Prior to 1894, however, the effect of calcium sulphate was little understood, and it was very little used. The really extraordinary effects which this substance produces upon the strength and setting-time of Portland cements give it an important place in cement manufacturing and entitle it to a fuller consideration and explanation than has yet been given it in the American technology.

The data reported by various observers are as follows:

TABLES SHOWING THE INCREASE IN STRENGTH WHICH RESULTS FROM AN INCREASE IN TIME OCCUPIED IN SETTING.

(Pounds per square inch.)

RESULTS REPORTED BY MESSRS. DYCKERHOFF, THE GERMAN CEMENT MANUFACTURERS, PRIOR TO 1880. (*a*)

(*a*) *Proc. Inst. Civ. Engrs.*, Vol. LXII., p. 92.

No.	One Sort of Cement.	Setting-time.	Neat-cement Briquettes.					Briquettes, 1 Cement to 3 Sand.				
			7 Days.	28 Days.	12 Wks.	25 Wks.	1 Year.	7 Days.	28 Days.	12 Wks.	25 Wks.	1 Year.
1	As manufactured..........	0° 20′	323	405	518	620	700	115	168	288	302	360
2	Same cement with 0.5% of gypsum.	3° 30′	315	456	572	623	650	142	212	339	358	390
3	" " " 1% " "	10° 0′	375	508	568	695	780	159	238	311	368	384
4	" " " 2% " "	14° 0′	425	543	688	718	805	180	263	305	375	410
5	" " without gypsum, but kept in store for some months..	10° 30′	318	450	550	592	618	168	218	318	360	431

RESULTS REPORTED BY JOHN GRANT IN 1880. (*b*)

(*b*) *Proc. Inst. Civ. Engrs.*, Vol. LXII., pp. 89 and 90.

Mixture.	7 Days.	31 Days.	60 Days.	90 Days.
1 to 1 briquettes; average of five........	107 lb.	159 lb.	188 lb.	267 lb.
1 to 1 briquettes with 0.5% of sulphuric acid added to the water; average of five............	129 "	227 "	260 "	255 "

RESULTS REPORTED BY PROF. TETMAJER, OF ZURICH, IN 1894. (*c*)

(*c*) *Mitteilungen der Anstalt zur Prüfung von Baumaterialien*, 7 Heft, Zurich, 1894, p. 39.

Number of Cement.	Per Cent. of Plaster-of-Paris Added.	Strength of Sand Briquettes, 1 to 3. Pounds per Square Inch.		
		3 Days.	7 Days.	28 Days.
4........	0.0	....	160	248
	1.0	....	212	298
	2.0	....	167	254
5........	0.0	174	285	307
	0.5	225	305	344
	1.0	227	320	408
	1.5	230	331	399
	2.0	182	290	400
	2.5	184	295	390
	3.0	115	235	369

RESULTS REPORTED BY CANDLOT IN 1891. (*a*)

Mortar.	Time:	Average Tensile Test per Square Inch. Per Cent of Sulphate of Lime Added.				
		0%	1%	2%	3%	4%
	Days.	Pounds.	Pounds.	Pounds.	Pounds.	Pounds.
Neat-cement Briquettes................	7	485	645	533	485	364
	28	673	738	674	790	488
1 cement to 3 sand Briquettes..................	7	223	252	263	185	196
	28	333	377	377	367	391

(*a*) *Ciments et Chaux Hydrauliques*, Paris, 1891, 9, p. 254.

RESULTS REPORTED, 1897, by FERET, OF THE BOULOGNE LABORATORY. (*b*)

Per Cent of Gypsum Added.	7-day Tests. Pounds per Square Inch.	
	Neat-cement Briquettes.	1 Cement to 3 Sand Briquettes.
Cement as received............	595	222
Cement with 1% of gypsum....	808	270
" " 2% " "	775	245
" " 3% " "	800	215
" " 5% " "	875	94
" " 10% " "	407	158

(*b*) *Étude spéciale des Matériaux d'Agrégation des Maçonneries*, Paris, 1897, p. 508.

RESULTS REPORTED BY MR. BAMBER, OF LONDON, 1897. (*c*)

Mixture.	7 Days' Average.	14 Days' Average.
	Pounds.	Pounds.
Cement and sand without gypsum...........	156	163⅓
Cement and sand with 2% gypsum......... . ..	176	186

(*c*) *Journal of the Society of Chemical Industry*, London, Nov. 30, 1897.

RESULTS REPORTED BY FREDERICK H. LEWIS IN 1894. (*d*) EFFECTS OF TREATMENT WITH SULPHATE OF LIME.

	7 Days, Neat.	7 Days, 3 to 1.
	Pounds.	Pounds.
As sampled..........................	444	196
Plus 1½% sulphate of lime............	589	212
" 2% " " "	651	215
" 3% " " "	729	225
" 4% " " "	524	165
" 5% " " "	247	66
" 6% " " "	254	68

(*d*) *Proc. Engrs. Club Philadelphia.*

A gain by addition of 3% sulphate of 64% neat and 15% 3 to 1. One per cent of plaster of Paris contains 0.55% of sulphuric anhydride (SO_3).

EFFECTS OF SULPHATE—SAME CEMENT TREATED WITH ANHYDROUS SULPHATE. (LEWIS.)

	7 Days, Neat.	7 Days, 3 to 1.
	Pounds.	Pounds.
As sampled....	444	196
Plus 2% calcined sulphate....	647	... .
" 4% " "	663	148
" 5% " "	293	127

One per cent of calcined sulphate contains 0.59% of sulphuric anhydride.

EFFECTS OF SULPHATE—SAME CEMENT WITH PULVERIZED GYPSUM. (LEWIS.)

	7 Days, Neat.	7 Days, 3 to 1.
	Pounds.	Pounds.
As received..................................	444	196
Plus 2% gypsum	673	....
" 3% "	541	179
" 4% "	533	194
" 5% "	593	179

One per cent of gypsum contains 0.465 of sulphuric anhydride (SO_3).

EFFECTS OF SULPHATE—AN ENGLISH CEMENT TREATED WITH PLASTER OF PARIS.—(LEWIS.)

	7 Days, Neat.	7 Days, 3 to 1.
	Pounds.	Pounds.
As sampled	502	110
Plus 1% sulphate	810	111
" 1.5% "	758	128
" 2.0% "	804	134
" 2.5% "	692	115
" 3.0% "	585	98

A gain by addition of sulphate 60% neat and 22% 3 to 1.

These results as regards strength are certainly remarkable, and a really satisfactory explanation is still lacking. The best exposition of the effects of sulphate of lime on the setting-time is given by Candlot in his book *Chaux et Ciments Hydrauliques.* Mr. Candlot shows in an admirable series of experiments that the slow set is due to the fact that the sulphate in conjunction with free lime present in the cement prevents the hydration and reaction of the aluminate of lime. As it is this salt which determines the set of cement, the cement accordingly becomes slow-setting. That the presence of free lime is necessary is shown by the fact that the slow set does not continue, but gradually disappears as the lime hydrates by exposure to the air. His results in this respect are as follows :

Cement Mixed with 3% of Gypsum.	Setting Time in Fresh Water.	
	Initial.	Final.
Tested the day mixture was made	1° 0′	7° 0′
" 4 days after	0 5	2 15
" 7 " "	0 5	0 20
" 11 " "	0 8	0 30
" 15 " "	0 5	0 30
" 19 " "	0 7	0 35
" 24 " "	0 5	0 25
" 32 " "	0 10	0 30
" 41 " "	0 45	5 30

The slow set which finally developed was due to the seasoning and purging of the cement by time.

In long-time tests it is generally accepted that there is no advantage in strength due to additions of sulphate. The strength of the cement is simply developed sooner. There is therefore no ultimate advantage due to the use of sulphate of lime, except to regulate the setting for the purposes to which the cement is to be put. Meantime the extraordinary difference in strength in the tests at one and seven days complicates the matter of test requirements very greatly and makes it difficult to frame satisfactory specifications.

PLANT, PROCESSES, AND PRODUCT.

Natural Cement.—The natural cement industry in America has developed little which is new or novel in manufacture. The sheet-iron kiln is a type of construction which is not known to exist elsewhere, but otherwise the practice is much the same as abroad.

In the Rosendale district an elaborate system of mining is conducted to get out the raw material, which is unique and extremely interesting. The raw material occurs generally in two beds of rock known as the dark rock and the light rock. These beds vary in thickness, but generally the former is about 18 ft. thick and the latter 12 ft., and there are barren layers about 10 or 15 ft. thick separating the two cement deposits. The regular formations have been very much disturbed in Ulster County, N. Y., and these cement beds are found in every conceivable position with respect to the horizon, but generally dipping more or less steeply. Under these conditions, with comparatively small beds of productive rock in a mountainous district, it soon becomes unprofitable to work the cement in open quarry. The natural development, therefore, has been a resort to mining by a system of slopes and headings similar in general scheme to anthracite coal mining in Pennsylvania. This work is evidently expensive, and would be much more so if it were not that the rock coming from these light and dark strata is practically all of it available for making cement and requires comparatively little sorting or separating after it is mined. As the lines of cleavage between the beds are sharp and clean and the rock comes out in excellent shape when blasted, these things also contribute to reduce the cost. Power-drills are generally employed in the Rosendale mines, with high explosives, to displace the rock. Some of the mines have a good deal of water, which requires to be pumped regularly to keep the headings dry. A somewhat similar system of mining is resorted to in Cumberland, Md. In Pennsylvania (the Lehigh district) the work is all done in open quarry on large deposits of suitable rock, requiring little stripping or sorting.

The kilns used on natural cement are all of the lime-kiln type. That is, the shaft is generally cylindrical, drawn into a hopper at the bottom and open at the top. The rock, without any preliminary preparation, is charged at the top in alternate layers with coal and the clinker is drawn at the bottom. The operation is continuous, and as the temperature of calcination is comparatively low, the output of cement per ton of coal is large, the yield varying from 50 to 120 bbl. per ton of combustible. The Campbell grate used by the Milwaukee Cement Co. is an improvement which has advantages in a more uniform burning of the clinker and in a considerable economy in fuel. This grate differs in design but is similar in idea to a grate which was introduced in the Lafarge cement works, in France, some years ago. The grate, shown in Fig. 1, was patented by Mr. Campbell in 1897.

The burnt rock falling from the bottom of the kilns is generally carefully sorted to exclude the overburnt and the underburnt clinker, and there is generally a mixing of material from different beds of rock to produce a blend having the qualities desired in the finished cement. The hard burnt clinker being excluded, the calcined rock is soft and easily reduced to powder. The lumps are first broken up in cast-iron crackers which are not required to be very heavy, and are then ground to powder in millstones. These answer the purpose very satisfactorily and economically for natural cement, and are generally preferred to more modern mills. It is a recent practice to pass the material over a separator after it has been cracked, so as to take out the material which has been already powdered and relieve the work on the mills.

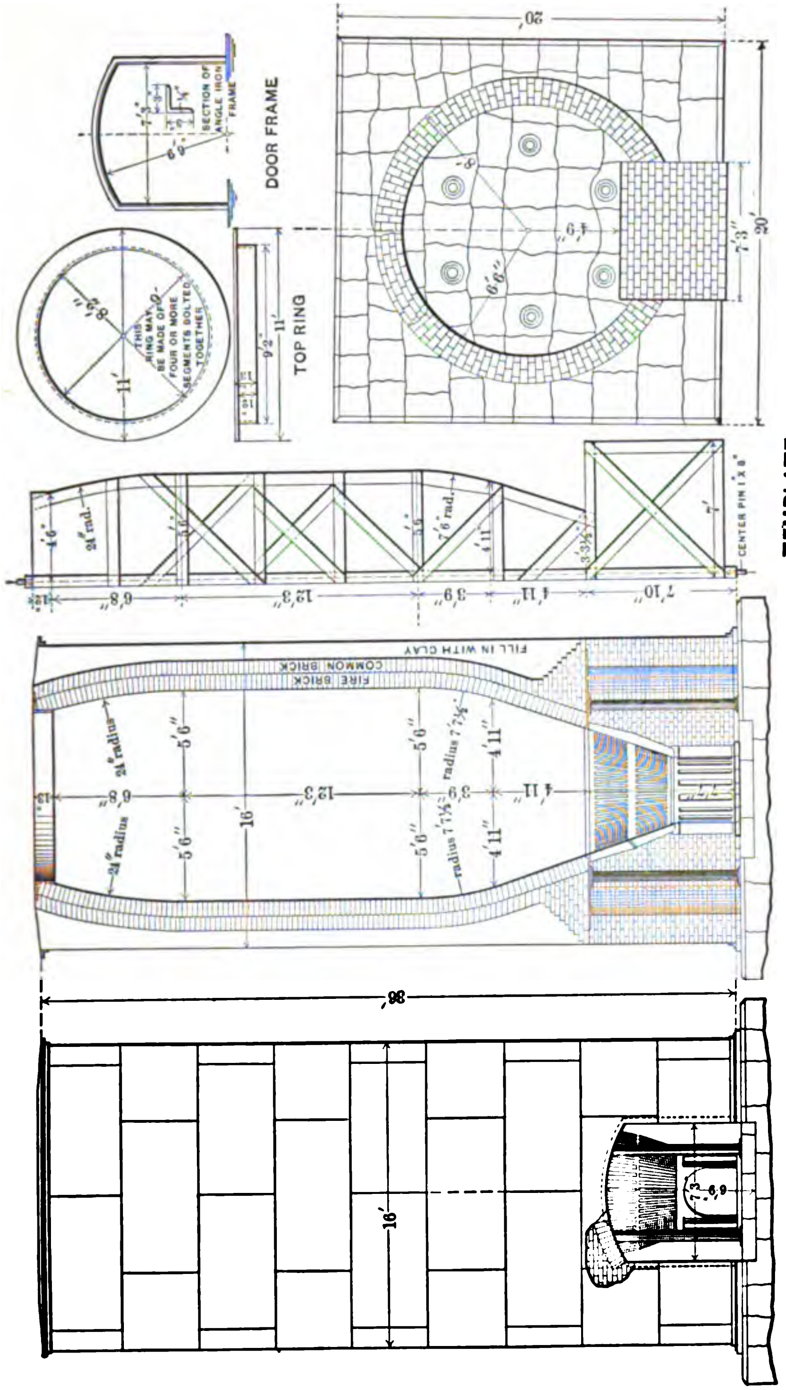

FIG. 1.—NATURAL CEMENT KILN WITH CAMPBELL GRATE.

In the natural cement trade there are several standards of weight per barrel, as follows: Rosendale, 300 lb. net; Pennsylvania, 280 lb. net in barrels, 300 lb. net in sacks; Western standard, 265 lb. net.

In regard to quality of the cement, there are very considerable variations in the raw materials, and it is rather difficult to adopt any criterion. Cements of the Rosendale district will ordinarily show a tensile strength of 70 lb. at one day neat, and 95% of the raw material will pass the No. 50 sieve. This is a very fair standard of quality for natural cements. In the Lehigh Valley district of Pennsylvania the manufacturers are making a grade of natural cement which they style "improved" cement, and which is made from a mixture of natural cement with a percentage of the product of Portland cement kilns. This cement shows higher tensile strength than the regular rock cement, and commands a rather better price.

In color there is a a very great variation among the rock cements, varying all the way from a light cream color to a very dark drab color, which is characteristic of the cements of the Rosendale district. There is no standard in this regard, and the color indicates nothing in regard to the quality of the cement. There is also a considerable variation in the specific gravity of the cements, though generally it is about 2.6. It depends chiefly on the percentage of iron in the material; the greater the amount of iron, the higher the specific gravity.

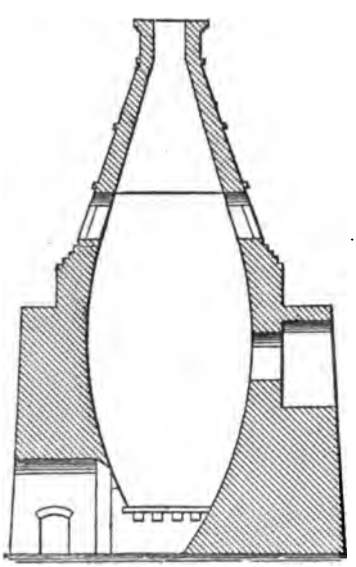

FIG. 2.—ENGLISH DOME KILN FOR PORTLAND CEMENT.

Portland Cement.—The furnace practice is so varied at the present time in America that this alone makes considerable difference in the method of handling the raw materials irrespective of modifications made necessary by the character of these materials themselves. In order, therefore, to deal intelligently with the handling of raw materials, it is probably best to discuss kilns first.

The style of the kiln first used for Portland cement in this country was the English dome kiln, a sketch of which is shown in Fig. 2. This kiln represents English practice of 25 years ago, and kilns of this type are more numerous yet in America than any other style. They are intermittent in operation. In preparing the kiln for burning it is customary to pile wood and coke for several feet above the grate, and then above that dried slurry and coke in alternating layers, up to the door at the base of the stack. The doors in the side of the kiln are then sealed up, the fire started at the bottom and allowed to burn its way through the clinker to the top. The doors are then opened and the clinker discharged through them and from the bottom. The kiln is then recharged for another burning. The operation is then repeated, the kiln being recharged about once in a week or 10 days. This kiln is rather expensive in fuel, and produces an output averaging only three to six tons of cement per day in a month's run.

A good deal of sorting and picking of the clinker is required to exclude the underburnt and vitrified material. Until 1889 these were the only kilns used in this country. At this date, however, the Atlas Cement Co. of New York began to experiment at Coplay, Pa., with revolving continuous kilns, employing crude petroleum for fuel. The oil was blown in in jets at one end, and the products of combustion passed into a stack at the upper end of an inclined revolving cylinder. This kiln has been patented in England by Mr. Frederick Ransome, who also secured an Amercan patent for it. Since 1889 it has been successfully developed and used by the Atlas Co. and other manufacturers in America. Indeed, although the original patent was taken out by Ransome in England, the kiln, after considerable trial there, was abandoned, and at present there are no kilns of this character in England, while in this country there are about 40 of them running, both on the hard raw material of the Lehigh Valley and on the soft, wet marls of Ohio and Michigan. The revolving continuous kiln, therefore, to all intents and purposes, is an American device, since its only successful development has been in this country. Originally employed with producer-gas, it was subsequently modified so as to use jets of crude petroleum, while latterly experiments have been made with a view to utilizing pulverized coal as fuel, and several plants are working kilns employing this fuel. This form of kiln is shown in Fig. 3, which is taken from the patent papers of Messrs. Hurry & Seaman.

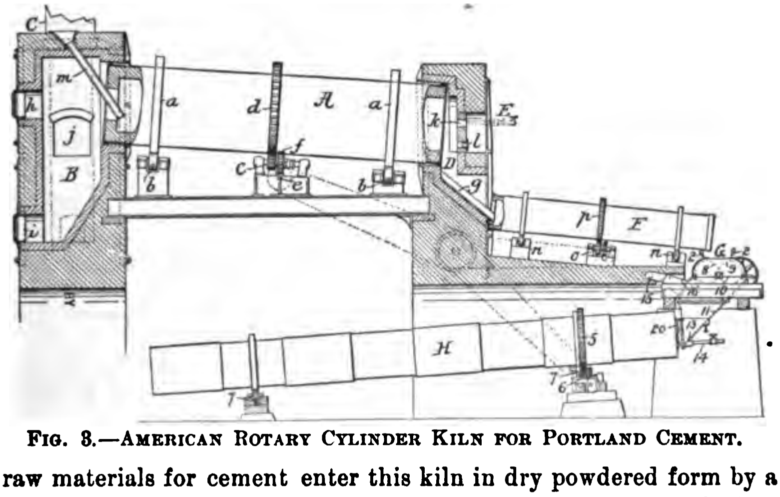

FIG. 3.—AMERICAN ROTARY CYLINDER KILN FOR PORTLAND CEMENT.

The raw materials for cement enter this kiln in dry powdered form by a spout at the upper end and are carried forward and downward by the revolution of the furnace towards the fireplace at the lower end, the burnt clinker finally falling out of an opening at the lower end of the cylinder. Certain improvements in the way of auxiliary cylinders for regenerating the heat in hot clinker have been perfected, and the Atlas Cement Co. has also worked out a scheme for sprinkling and cooling the clinker in a third cylinder, so that when discharged from this it will be ready for immediate grinding in the mill. This device is shown in the illustration Fig. 3*a*.

In 1890–91 the Western Portland Cement Co., of Yankton, S. D., built six kilns of the Johnson type. These are English kilns quite similar in general type to the dome kilns, but have long horizontal flues between the kilns and a central chimney. In this flue and on top of it the wet slurry is deposited and is dried by the products of combustion. The kiln is then recharged by taking up

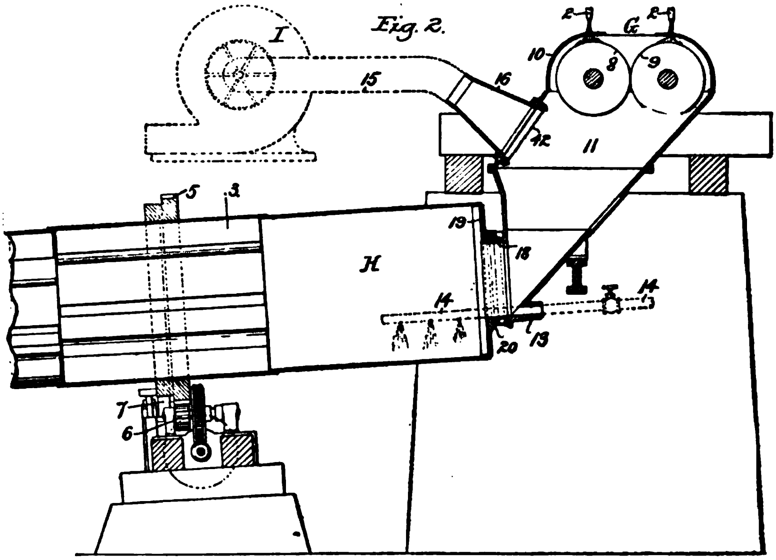

FIG. 3a.—DETAIL OF COOLING CHAMBER OF ROTARY KILN.

the dried slurry from the bottom of the flue and placing it with layers of coke in the kiln. Fig. 4 illustrates the Johnson kiln.

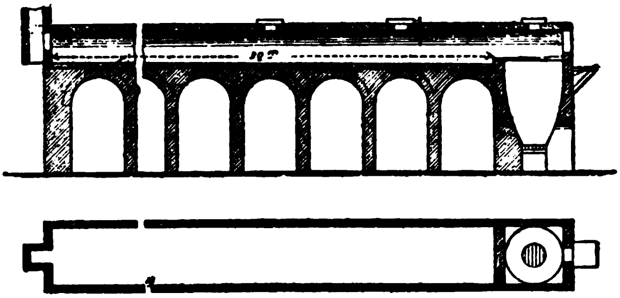

FIG. 4.—JOHNSON KILN.

In 1892–93 kilns of the Dietzsch type were erected at two plants in Ohio. This kiln is the most successful of the German kilns at the present time, being especially economical in fuel, and producing a much larger output than any form of discontinuous kiln. It is illustrated by Fig. 5.

In 1893 the Coplay Cement Co. built a kiln of the Schoefer or Aalborg type, which is quite similar in its conception to the Dietzsch kiln, but instead of an offset in the shaft, it is simply narrowed in the center above the stoke-holes, so as to produce a high temperature in a narrow zone. This kiln is also economical in fuel, but like the Dietzsch kiln is rather expensive in manual labor. The Coplay Co. built eight more of these kilns in 1893, and the year following the

Glens Falls Cement Works, of Glens Falls, N. Y., built six of them. In 1896 the White Cliffs Portland Cement Co., of Arkansas, built a plant also with Schoefer kilns. Fig. 6 shows a section of the Aalborg kilns.

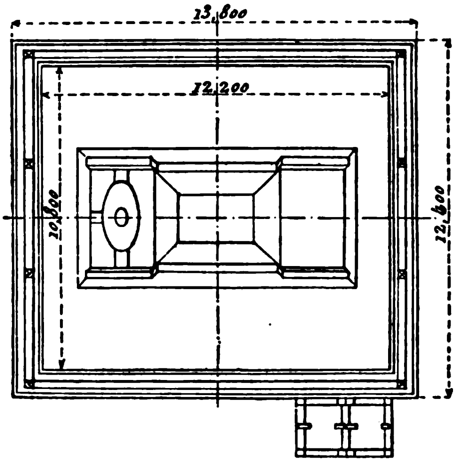

Plan.

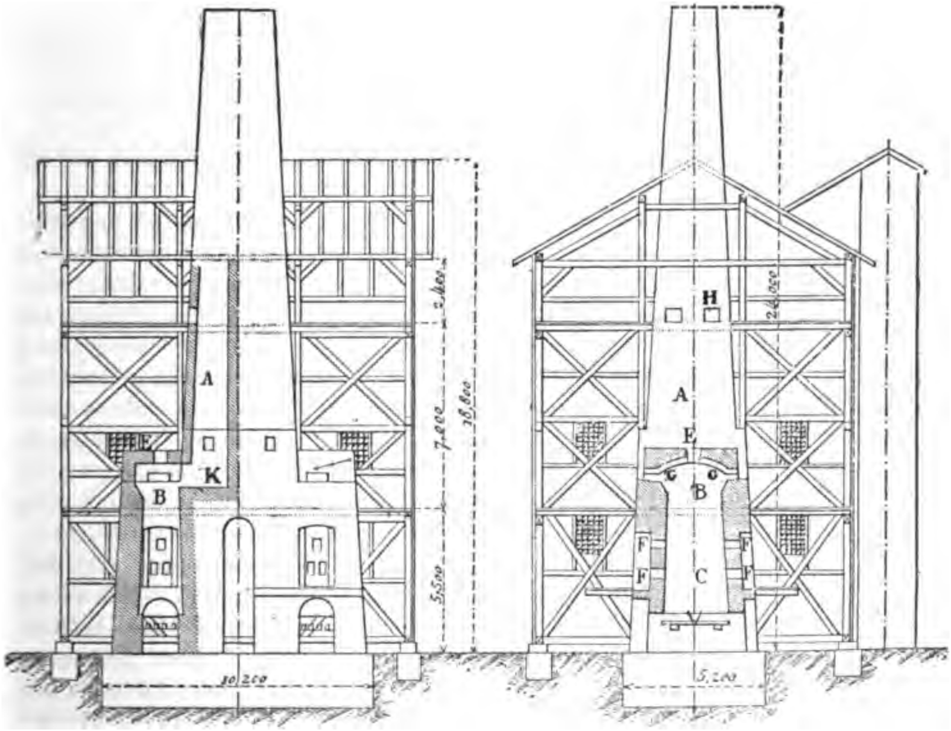

Longitudinal Section. **Cross Section.**

Fig. 5.—Dietzsch Kiln.

In 1897 designs were under consideration for a continuous kiln of the French type, approaching in general scheme and outline a new continuous kiln perfected in France in recent years. This kiln is not so economical in fuel as the German or Danish kilns, but is extremely economical in manual labor. None of them has as yet been built in this country. Fig. 7 shows it as built for wet raw materials in France.

Accordingly there are in present use in Portland cement manufacture five different types of kilns, requiring three different methods of preparation for the raw materials, regardless of differences of preparation which may be required due to the character of these materials.

The kilns, plant, etc., of the leading manufactories are as follows:

Manufactory.	Kilns.	No.	Approximate per Diem Output per Kiln. Barrels.
Coplay Cement Co.	Schoefer continuous	9	55
" " "	Ordinary intermittent.	28	80
American Cement Co., Egypt	" "	56	30
" " " Jordan	" "	6	30
Atlas Cement Co.	Revolving continuous.	20	150
Alpha " "	" "	8	150
Vulcanite "	" "	3	150
Sandusky "	" "	4	120
Bronson "	" "	3	120
Empire "	Ordinary intermittent	18	130
Glens Falls "	Schoefer continuous	8	60
White Cliffs, Ark.	" "	8	60
Buckeye Cement Co.	Ordinary Intermittent	....	30
" " "	Dietzsch continuous	....	50
Diamond Cement Co.	(a) " "	...	......
Yankton, S. D.	Johnson intermittent	6	......
Bonneville Cement Co.	Revolving continuous	3	150

(a) Rebuilding.

A new plant near Egypt, Pa., and another near Sandusky, Ohio, are both installing revolving continuous kilns.

The character of the kilns being understood, the preparation of raw materials can now be more readily discussed. To accurately proportion the raw materials and to perfect an intimate mixture of them are the prime factors in making good Portland cement. Other things being equal, the more exactly the proportions are maintained the greater the uniformity of the cement; the more homogeneous the mixture and the finer the state of division of its particles, the greater the strength and hydraulic energy of the product. Admitting these points as axiomatic, there is yet, of course, a practical limit in cost of preparing raw materials which cannot be exceeded in successful manufacture. It is thus necessary to achieve, on a commercial basis, as perfect a mixture as may be. In dealing with so many different grades of raw material there is here an opportunity for the exercise of intelligent adaptation of plant to conditions. At the same cost very different results may be obtained from different apparatus. Indeed, in this whole matter of handling raw materials technical skill finds an ample field both in accounting for and proportioning mixtures and in adaptation of plant. It may be frankly admitted that in this respect representative American manufacturers are not yet on a par with similar French and German works. In laboratory facilities and in executive staff European works are superior. The chemist occupies there an assured and responsible position which has not yet been accorded him here. In the general excellence of plant *per se*, however, American works are now quite on a par, class for class, with those of Continental Europe.

The simplest method of preparing raw materials in American practice is that in use for the hard, dry raw materials of the Lehigh Valley, burned in revolving kilns. It consists in reducing a suitable mixture of rock to a fine powder. This powder is fed continuously into the upper end of the kiln and is carried forward and downward towards the fire by the revolution of the inclined cylinder, emerging as clinker from the lower end. There is no preparation of raw materials anywhere in the world so simple and inexpensive. The revolving kiln first became a commercial success with this class of material in Eastern Pennsylvania, and undoubtedly it is with these argillaceous limestones that it can be employed most advantageously.

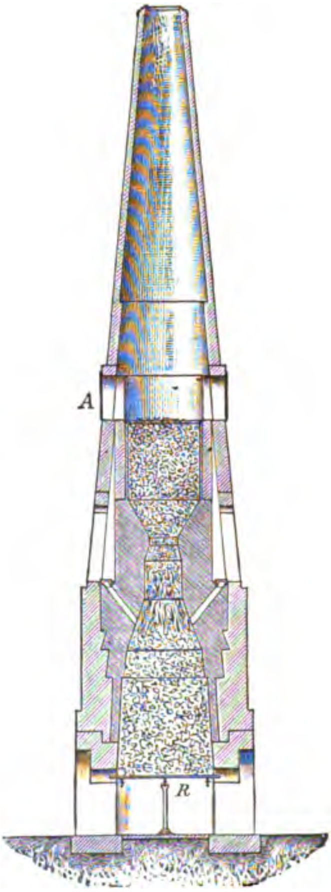

Fig. 6.—Aalborg Kiln.

To prepare the same raw materials for shaft kilns of any type requires three handlings, namely: 1. Grinding the rock. 2. Making the ground rock into bricks or balls. 3. Drying the bricks.

In Pennsylvania a portion of natural-rock cement is regularly added in the rock-mixture to give plasticity and cohesion to the bricks, which would be entirely lacking without it. When clay and hard limestones are the raw materials, two different methods have been used. In the first the limestone is calcined and slaked. A mixture is then made of clay with the slaked lime. In the other method the clay is first dried and ground and then mixed dry with pulverized limestone. In both methods the resulting mixtures are then made into bricks and dried for burning.

In preparing the wet marls and clays of New York for burning in shaft kilns the approved practice is to first dry and grind the clay and to then add it in proper proportion to the wet marl. The mixture is then perfected in pug or edge runner mills and the slurry is balled and dried for calcination.

Various methods of balling slurry are employed. Sometimes it is simply spread on a floor and cut up in blocks. Brick-making machines discharging a continuous stream of slurry which can be cut to size by wires or knives are employed in both New York and Pennsylvania. The German dry brick-press, requiring only a small quantity of water in the mixture, is in use in one plant. With marl and clay, or chalk and clay, it is unnecessary to make bricks; the material separates into lumps by shrinkage and drying, and can then easily be broken to suitable size. This is the practice abroad with kilns of the Johnson type, and in drying marls and clays for shaft kilns in New York State.

For the preliminary drying of clay a revolving dryer of some form or other is found most satisfactory, while for drying bricks or balled slurry tunnel dryers

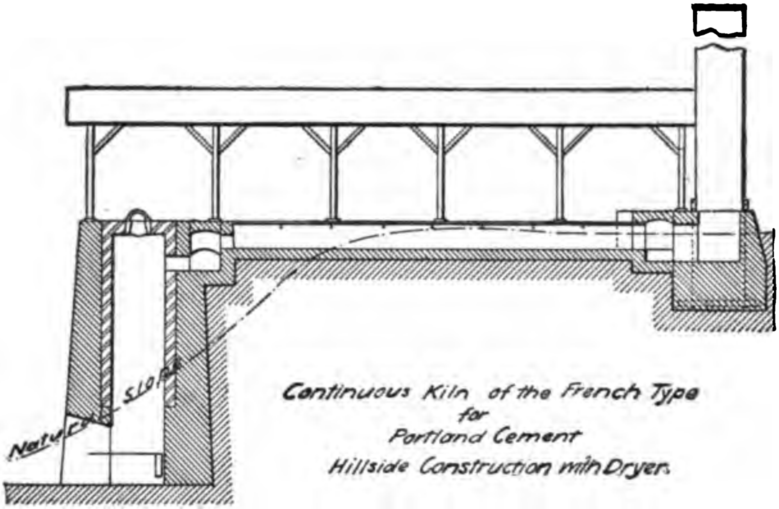

FIG. 7.

FIG. 8.—GRIFFIN MILL.

are better. Narrow brick tunnels are used, and the bricks are stacked on shelving fitted to light cars, which are run into the tunnels. Drying is effected either by heat from steam coils set in the bottom of the tunnels or by a current of heated air passing through them. This system of balling and drying slurry is taken from German practice, and is expensive under American conditions. Simpler methods following recent English or French practice of handling the slurry by pumps and drying in flues or on floors by waste heat from the kilns would be a much more economical method of dealing with wet raw materials. The recent French practice with such materials is superior to anything yet suggested for reducing labor-cost in handling and drying raw materials which require to be balled from slurry before calcination.

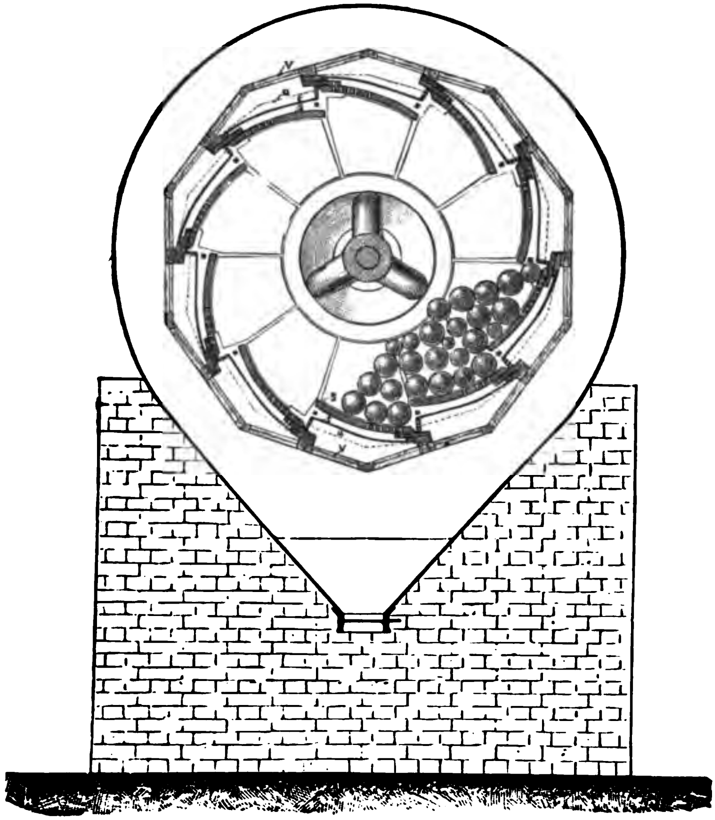

FIG. 9 *A*.—GERMAN BALL MILL, CROSS SECTION.

A very simple method of preparation of wet raw materials for the rotary kiln is now in use in Ohio and Michigan. The raw materials there are wet marls and clays, and it has been found practicable to introduce these materials in a humid or semi-humid condition and burn good clinker. At the works at Sandusky the material is introduced in a semi-humid condition, while at Bronson the slurry is introduced into the upper part of the kiln by a pump.

With respect to crushing and grinding machinery for hard raw materials and for clinker, American practice is excellent. Crushers of the Blake or Gates type are used for the first reduction, and crackers of the coffee-mill type, millstones, and improved mills for the fine grinding. The Griffin mill shown in Fig. 8 is an American invention which has found much favor both here and abroad. Its fine grinding is causing it to be favored for raw materials also, to the neglect of millstones. In the Alpha works of New Jersey, the Glens Falls works in New York, and in a new plant of the American Cement Co. at Egypt the Griffin mills are used on raw materials to the advantage of the product. The German ball-mill, in which grinding is effected by the impact and abrasion of steel balls rolling freely in a revolving cylinder, has also found favor in recent plants. The general feature of this mill is shown in Fig. 9. The material enters by a hollow shaft and passes out as it is sufficiently reduced to go through screens surrounding the cylinders. The ball-mill has been employed on clinker for first reduction only in conjunction with Danish tube mills to do the finer grinding. This Danish mill is shown in Fig. 10. In it the grinding is done by the impact of flint balls, and with a moderate feed very fine grinding can be done. Because of the simplicity of the means employed these mills have evident advantages.

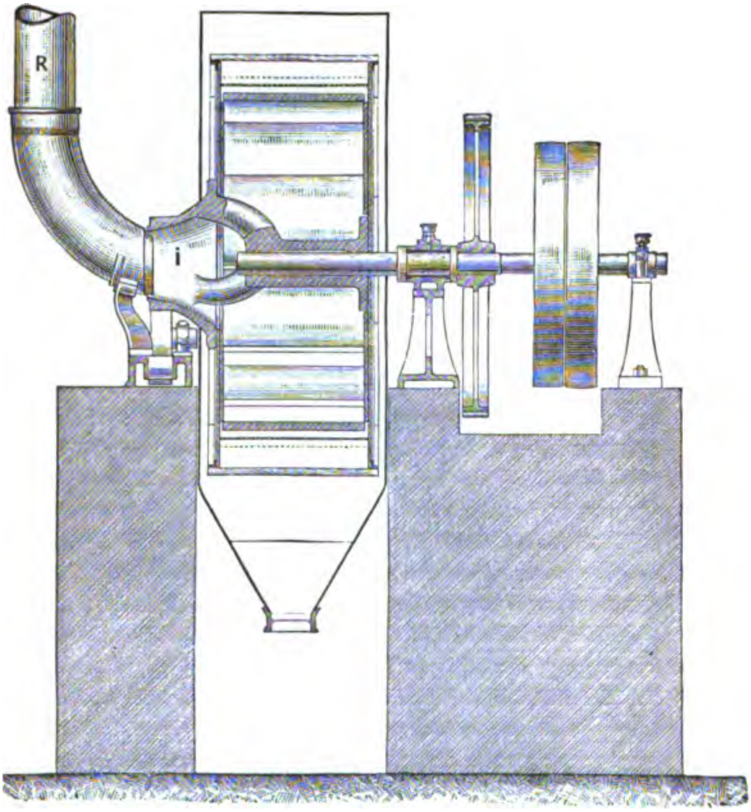

FIG. 9 *B*.—GERMAN BALL MILL, LONGITUDINAL SECTION.

A rather singular omission in American grinding plants is the absence of separators. In gradual reduction of materials the use of separators to remove the fine stuff before the material passes to the mills is advantageous, because it relieves the mills of that much material and increases their output. Wind separators are very generally used abroad, but are not common here.

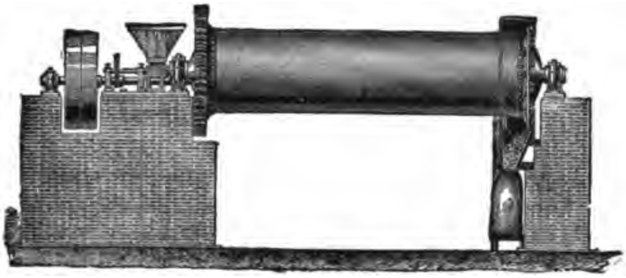

FIG. 10.—DANISH TUBE MILL.

The fineness of the best American cements is unsurpassed in any practice, and as a general average is superior to foreign-made cements. The following table gives some comparative figures in this respect:

	Per Cent Passing Sieves.				Per Cent Passing Sieves.		
	No. 50.	No. 100.	No. 200.		No. 50.	No. 100.	No. 200.
Saylors	100	96.4	....	Brooks, Shoobridge & Co.	98.8	88.3	....
Giant	99	94.9	....	Alsen	99.7	92.4	68.4
Atlas	99.5	92.7	....	Dyckerhoff	....	....	....
Alpha	99.7	94.8	....	Aalborg	100	99.6	72
Vulcanite	99.6	95.3	....	Germania	....	....	....
Sandusky	99.6	92.8	71	Condor	99.6	88.5	....

The tensile strength of American cements in ordinary tests is given by table below. They represent tests of random lots of cement without any selection for the purpose, and may not always be fairly representative of the products. Standard European results are added for comparison.

Brand.	7 Days.		28 Days.		One Year.	
	Neat.	Sand.	Neat.	Sand.	Neat.	Sand.
	Pounds.	Pounds.	Pounds.	Pounds.	Pounds.	Pounds.
Saylors	615	190	816	263	830	....
Giant	441	213	605	251	672	342
Jordan Giant	590	170	734	283	607	341
Alpha	464	181	778	413	807	....
Empire	476	....	642	....	903	380
Sandusky	542	202	879	302	860	414
Diamond	460	168	660	266	727	340
Atlas	792	191	993	346	860	....
Vulcanite	885	333	860	384	....	....
Brooks, Shoobridge & Co	577	221	632	262	902	364
Dyckerhoff	....	....	648	224	835	319
Star Stettin	515	182	692	268	878	306
Germania	....	....	575	214	783	312
"	....	....	....	....	655	387
Condor	681	243	765	334	833	401
Hemmoor	....	....	614	190	874	310
"	....	242	....	....	616	444
Alsen (yellow label)	....	....	....	....	600	308
" (white label)	....	....	863	302	937	364
Mannheimer	458	182	....	....	....	....
Lagerdorfer	451	151	519	232	660	342

The sand mixtures are in all cases one to three.

CRITERIA OF QUALITY.

The only standards in testing cements which command any general recognition in America are the recommendations of a committee of the American Society of Civil Engineers. The reports of this committee are found in Nos. 276 and 315 of the society's *Transactions*. The work of this committee has established practice on the following points: 1. The form and section of test briquettes; 2. A standard quality of sand; 3. Standard sieves for sand; 4. Standard sieves for determining fineness of cements; 5. The rate of speed in applying stress in testing (400 lb. per minute); 6. Normal pat tests for constancy of volume; 7. The proportioning of test mortars (cement, water, and sand) by weight.

By fixing standards in these important respects the committee has rendered a very great service to this field of investigation. The only tool suggested by the committee for manipulating mortars was the trowel. At first very great differences in results were obtained by different operators manipulating mortars in this way. In recent years, however, as good laboratories and skilled operators have become more numerous, there has been a great improvement in this respect and fairly comparable results are obtained. It is an open question whether a change to foreign practice employing mechanical hammers would now afford any improvement. A new committee of the society is at present considering methods with a view to revising the old report and extending its scope.

In specifications, test requirements are usually fixed as follows:

For natural cements: Fineness; normal pat tests; tensile strength one day neat; tensile strength seven days neat; tensile strength seven days days one to two standard sand.

For Portland cements: Fineness; setting-time; normal pat tests; tensile strength at seven days neat; tensile strength at seven days one to three standard sand.

A weight per unit of volume is not used, the specific gravity determination being substituted for it to great advantage. There is a very frequent use of the boiling test in some form or other. Many of the specifications for this test are very badly considered and illogical. As Dr. Michaelis originated this test, it may not be amiss to state what the boiling test is as Michaelis makes it, to wit: A thin pat of neat cement, three inches in diameter, one-half inch thick at the center and drawn to a thin edge at the circumference, is prepared on a piece of moist filter-paper set on a glass plate. After setting, the cake is removed from the filter-paper and placed under cover in a damp atmosphere, to protect it from surface drying, for 24 hours, at the end of which time the cake is put in a covered bath of cold water. This bath is then heated to the boiling point and maintained boiling for three hours. The pat is then taken out and its condition recorded.

The standing of an accelerated test of this character is not yet satisfactorily established, nor has it yet been adopted in standard specifications abroad. A test of pats in vapor and, after setting, in water at 115° F., which was suggested by the late Mr. Faiji is excellent and entirely free from objection.

With respect to tensile tests of cement, the requirements of specifications have been thrown into much confusion by the difference in strength at short periods between cements treated with sulphate of lime and untreated cements. The facts in this regard are fully set forth above in dealing with sulphate of lime. The value of additions of sulphate resides entirely in regulating setting time to make cements more suitable for the uses to which they are to be put. The increase in strength incident to the treatment is without ultimate advantage. Since quick-setting cements free from sulphate of lime are important for certain uses, it appears necessary to distinguish between the two in specifications. This is done abroad both in the German and Swiss standard specifications (see German and Swiss Normen). For tide-water work, for work in wet bottoms, for concrete deposited in water, for grout, for work in freezing weather, and for rapid construction of concrete masonry, quick-setting cements are indicated by good practice. When used for such purposes, a distinction in test requirements is desirable. European standards for strength are as follows: German Normen slow-setting cement, 227 lb., one to three at 28 days; German Normen quick-setting cement, less than above; the setting time is to be considered with the strength. Swiss Normen slow-setting cement, 227 lb., one to three at 28 days; Swiss Normen quick-setting cement, 199 lb., one to three at 28 days; French quick-setting cement, 285 lb., neat at seven days; French quick-setting cement, 114 lb., one to three at seven days; French quick-setting cement, 498 lb., neat at 28 days; French quick-setting cement, 213 lb., one to three at 28 days.

In America there are no standard test requirements for strength of cements, and nothing approaching a standard specification. The whole matter is in an extremely unsatisfactory condition both as regards the manufacture and purchasing of cement, and some definite agreement on these points is very desirable.

THE USES OF CEMENT.

Hydraulic cements are employed in America to some extent for all the purposes for which these products have been used in Europe, but the relative development for different uses has been distinctly different here from that abroad. For sidewalk pavements Portland cement concrete has probably been employed in America to a greater relative extent than anywhere else in the world and with very satisfactory results. On the other hand, the use of concrete for monolithic construction in masonry, arch bridges, tunnels, and sewers has been much less exploited here than abroad. The best work in massive concrete construction is probably that which has been done in New York Harbor, where large monoliths have been made by the New York Department of Docks. These blocks are not made in situ, but are prepared in large timber forms and allowed several weeks' or months' hardening in the air before being placed in dock and bulkhead walls. Blocks of this kind made by the New York Department of Docks weigh as much as 65 to 70 tons and have proved a very satisfactory type of construction.

The work which has been done on the Wallabout Channel in Brooklyn is also a notable and successful use of monolithic concrete masonry for this purpose. In this work the concrete was deposited in situ, but as the water was excluded by coffer-dams the concrete had some months' hardening in the air before being subjected to the action of the salt water.

Some few bridges have been built in concrete arches, the most considerable work in this line having been done in what is known as a Melan arch construction in which steel beams are bedded in massive concrete.

A use of hydraulic cement which promises a great development and probably an unique development here is in floor arches in fire-proof construction. A great deal of work of this kind has been done in the larger cities within the last few years, and some very interesting comparative tests between this method of construction and the hollow-tile arches have been made in New York City under the auspices of the New York Bureau of Building Inspection. In these tests the result obtained from concrete arches has been extremely satisfactory. It is a fact that cement clinker is produced at a considerably higher temperature than the ordinary fire-clay tile. This is especially true when the cement clinker is compared with the hard tile which is semi-vitrified in manufacture. The temperature at which cement clinker is produced in kilns undoubtedly varies with different compositions, but with a percentage of lime of 62 or more in the cement it can be taken for granted that the temperature of calcination is between 2800° and 3000° F. When the cement is made into mortar it of course takes up water which it will lose again at a red heat, and in thus losing the water of hydration it will also lose considerable strength. The results of the fire tests, however, show very clearly that while there is a loss of strength in this way the cement does not disintegrate or lose body. On the contrary, the effect produced is to render the concrete which is in immediate contact with the fire light and porous, and this constitutes a non-conductor to the body of the concrete beyond it. In a variety of different constructions the concrete has very successfully stood fire test in this way, and indeed results have been so satisfactory and construction of this kind can be effected at such moderate cost that there seems to be no doubt that there will be a great development of the use of hydraulic cement for this type of construction.

THE CHEMICAL INDUSTRY.

THE American chemical industry experienced a highly prosperous year in 1897, the production of the great staples, sulphuric acid and alkali, showing a great increase in quantity though prices ruled low. The manufacture of superphosphate showed a healthy development and large profits were realized. There was a considerable increase in the make of cyanide of potassium, owing to the larger demand for it in gold extraction. The output of certain substances, which are made chiefly as by-products, such as copperas and copper sulphate, did not differ materially from the previous year. It is not long ago that America had no chemical industry, but already it has attained far-reaching importance, and there is prospect that we shall soon be independent of the foreign makers, at least so far as heavy chemicals are concerned. Even now the increase in the manufacture of these articles in this country has led to demoralization in the English chemical trade, which has been heretofore our chief source of supply.

Alkali.—The production of soda alkali, reckoned as 58° soda ash, in the United States increased from 157,475 metric tons in 1896 to 277,072 metric tons in 1897. The concerns engaged in the manufacture were the Solvay Process Co., of Syracuse, N. Y., and Detroit, Mich, the Michigan Alkali Co., of Wyandotte, Mich., the Matthiessen Alkali Co., of Saltville, Va., and Niagara Falls, and the Electro Chemical Co., of Rumford Falls, Me. The works of Church & Co., at Trenton, Mich., and those of the United Salt Co., at Cleveland, O., were idle.

Most of these concerns made not only soda ash, but also bicarbonate and caustic soda. The Michigan Alkali Co. put in operation its new works near Detroit (about 2 miles from the old works) and made bicarbonate there. The Solvay Process Co. largely increased the capacity of its Syracuse works and started its Detroit works. The Matthiessen Alkali Co. made soda ash and caustic soda.

The manufacture of alkali in the Detroit district is increasing very rapidly, and this seems destined to become the great center of the chemical industry in America. The Pennsylvania Salt Co. has bought land on the river and intends to go into the manufacture of soda ash, caustic soda, and bicarbonate of soda by the ammonia process. The English United Alkali Co., Ltd., has contracted for its salt wells, and is making active preparations for the construction of extensive works. The Detroit Soap Works is installing a plant for the manufacture of caustic soda.

Alum.—The production of crystallized alum in the United States in 1897 was

15,456 short tons against 14,090 in the previous year. The production of sulphate of aluminum was 46,355 short tons against 42,240 in 1896. These statistics are arrived at by computation from the amount of bauxite and cryolite consumed in the United States, taking into account the amount of these minerals that is used for the manufacture of aluminum. A small quantity which is used for the preparation of aluminum chloride and other minor chemicals is ignored.

There was no noteworthy change in the alum industry in 1897 from the previous year. The manufacture continues in the hands of the five works in Pennsylvania, four in New York, and two in Massachusetts. Reference should also be made to the article on " Bauxite " elsewhere in this volume.

Ammonium Sulphate.—For statistics, etc., see article on " By-product Coke Ovens," under the caption " Coal and Coke," elsewhere in this volume.

Bluestone (Copper Sulphate). —The production was 51,021,945 lb., against 48,732,840 lb. in the previous year. Nearly all of this was obtained as a by-product by silver-lead and copper refiners.

Copperas (Ferric Sulphate).—The production in 1897 was 11,924 tons, against 11,170 tons in 1896. This does not include the copperas used in the manufacture of Venetian red. Early in the autumn the price for this vitriol was raised by agreement among the principal manufacturers to 57.5c. per 100 lb. for carload lots and 67.5c. for smaller quantities, this being an advance of 10c.

Potassium Chlorate.—The National Electrolytic Co. commenced the erection of works at Niagara Falls for the manufacture of potassium chlorate, contracting with the Niagara Falls Power Co. for 1000 h.p. Niagara Falls is becoming an important center of the chemical industry. The Chemical Construction Co. has also engaged in the manufacture of potassium chlorate at that place, while the Electro Chemical Co. produces sodium and sodium peroxide by the Castner method.

Sulphuric Acid.—The production in 1897 was 1,128,741 short tons, against 1,019,501 in the previous year. The figures are reduced to terms of 66° B. There was an increase in the amount of acid made from pyrites and a decrease in that made from brimstone, the former exceeding the latter for the first time in the history of the industry in this country. There was an output of 44,736 tons of acid of 66° B. as a by-product in blende-roasting, etc., against 26,770 tons in 1896, five works having made such recovery.

IMPORTS OF CHEMICALS INTO THE UNITED STATES. (IN POUNDS.)

Year.	Nitrate of Soda.		Bicarbonate of Soda.		Caustic Soda.		Sal Soda and Soda Ash.		Other Soda Salts.	
1893......	257,626,880	$3,673,537	1,380,426	$23,136	52,116,492	$1,171,878	348,972,506	$3,982,772	29,850,109	$205,523
1894......	219,824.646	3,189,084	4,479,524	63,625	46,554,322	219,197	321,300,874	2,665,838	17,667,314	132,385
1895......	286,959,000	3,778,360	8,862,028	123,425	72,019,114	1,211.000	307,026,104	2,821,612	9,943,915	155,006
1896......	258,728,960	3,566,744	4,843,786	60,878	47,827,247	859 809	191,780,537	1,448,107	5,628,071	100,917
1897......	212,711,600	2,810,187	965,669	13,982	57,742,392	988,318	154,656,060	1,122,867	8,892,814	114,971

Year.	Nitrate of Potash.		Muriate of Potash.		Chlorate of Potash.		Chloride of Lime.	
1893......	18,874,016	$369,274	74,663,116	$1,192,516	8,881,791	$481,839	98,618,148	$1,843,410
1894......	9,375,950	249,842	101,597,074	1,540,081	4,599,969	573,154	96,256,251	1,697,038
1895......	11,419,090	505,207	81,782,736	1,296,164	4,917,636	456,342	104,317,968	1,628,877
1896......	20,085,327	470,899	88,525,983	1,392,504	4,659,893	566,360	99,471,335	1,441,600
1897......	16,276,852	306,696	108,839,049	1,683,472	6,508,359	461,620	109,176,451	1,460,799

THE NEW YORK CHEMICAL MARKET IN 1897.

Alkali.—Domestic 58% alkali sold at 67½c. per 100 lb. f. o. b. works in January, at 60c. in March, 57½@60c. in June, 2½c. less in July, 60c. in August, 5c. higher in September, 10c. less in October, 55@60c. in November, and 65@67½c. in December. The manufacturers endeavored early in the year to form an agreement to maintain prices, but nothing was accomplished. Foreign alkali was quoted at 67½@70c. per 100 lb. in January, and when the duty was advanced from ¼c. to ⅜c. per lb. in the new tariff the selling price of the article rose to 72½@77½c. In September, however, the price receded again to 67½@72½c., and remained so until the close of the year.

The price of 60% caustic soda was $2.22½@$2.42½ per 100 lb. in January and February, $2.10@$2.15 March to June inclusive, $2.22½@$2.42½ in July and September, and $2.10@$2.20 in October, November, and December. The quotation on 70% to 76% caustic soda was $2.12½@$2.22½ per 100 lb. in the first quarter, $1.90@$2 in the second, $2@$2.25 in the third, and $2@$2.15 in the last.

Sal Soda was quoted at 55c. per 100 lb. in January for the American. This price did not change until August, when it was advanced to 65c. Foreign sal soda brought 62½@67½c. per 100 lb. at the opening of the year, but in March dropped to 60@65c. When the new tariff imposed the duty at ⅛c. per lb. the price rose again to 67½c., and when December opened the quotation was 67½@75c.

Acids.—Muriatic, 18°, remained steady at 75@85c. until the close of the year, when it advanced to 90c.@$1.50, according to quantity; 20° sold at 85@95c. until December, when it rose to 95c.@$1.05; 22° opened at $1.15@$1.25 in January and advanced to $1.25@$1.35 in December.

Nitric acid was also steady in price, being quoted at $3.50@$4 per 100 lb. for 36°, $4@$4.50 for 40°, and $4.50@$5.50 for 42°; an advance of 10c. on all strengths was made in December for 1898 delivery.

Sulphuric acid did not fluctuate to the extent that was expected early in the year, when brimstone began to rise in value. In January it sold at 85c.@$1 per 100 lb. for 66° and closed at 90c.@$1.05 in December.

Blue Vitriol, owing to the upward tendency of the price of copper, rose from $3.75@$4 in January to $4@$4.25 in February and to $4.50 in April, receding to $3.62½@$3.75 in August. In December the quotation was $3.75@$4.25, principally for delivery over 1898.

Bleaching Powder was in good demand. No bleaching powder is made in the United States, excepting the liquid bleach produced by a paper manufacturer in Maine, who uses all he makes. In the new tariff bleaching powder was taken from the free list and a duty of ⅕c. per lb. levied. The selling price of prime bleaching powder was fixed at $1.75@$1.87 per 100 lb. at the opening of the year, and remained stationary until July, when it was advanced to $1.80@$2, owing to the new duty. In August the price was again advanced to $1.90@$2.10, but at the close of the year it receded to $1.85@$2. The Continental brands were quoted at $1.62½@$1.75 per 100 lb. in January; at $1.57½@$1.70 in March; at $1.55@$1.75 in June; and at $1.80@$2 in August. At the close of the year the quotation was $1.65@$1.95, according to make and quantity.

Potassium Chlorate was in an unsatisfactory condition throughout the year, owing to overproduction and keen competition for American business. The European makers of chlorate by electrolysis have increased the number of their plants, and the new plant located in France has added materially to the production. Prices had to suffer as stocks accumulated. Besides, the levying of a duty of 2½c. per lb. in the new tariff caused foreign makers of chlorate to reduce their prices, instead of advancing them, so as to secure our trade, while sellers here were obliged to give protection in their contracts for delivery over 1897, something they had never before done on this article. In January 7¾c. per lb. was quoted and ¼c. more was asked in the following month; in March 7⅝@10c. was the price, and in April as high as 11c. was obtained by dealers, but this price broke in May 3½c., owing to keen competition and plentiful supplies. In June the price hovered between 8¼c. and 10c., and for a month remained in that position, but in August it advanced ½c. In September 11c. was again quoted, but towards the end of the year the price dropped to 9½@9¾c.

THE ENGLISH CHEMICAL INDUSTRY.

Prices for alkali fell steadily through 1897, stocks accumulated, prices of raw material rose and more finished products were put on the market than the demand called for. The condition at the end of the year was consequently far from satisfactory. Some works had been stopped, and others had been put upon short time, but no improvement in conditions seemed probable within the near future.

The sulphuric-acid works kept going fairly well, but the price realized for the product averaged lower than for many years previous. The low prices of pyrites and nitrate of soda, however, helped out manufacturers to a certain extent.

The salt-cake trade was fairly steady, although the loss in making it (according to the *Chemical Trade Journal*) averaged pretty nearly 12s. per ton, and it is an interesting question how long manufacturers will go on working at such a loss.

The market for bleaching powder was completely demoralized. With the advent of the product made by the Castner-Kellner process at Weston Point, near Runcorn, the price fell off heavily, so that while £5 18s. 6d. could be obtained in September, at the end of the year a quantity was purchased at £4 15s. This was not, however, a genuine manufacturing figure, since the whole of the Weston Point output has been purchased by the Solvay syndicate at about £5 17s. 6d., and it was this syndicate which was selling the product at less than the cost price. Bleaching powder is now being made industrially by the nitric-acid process in at least two works, where it is said to be doing satisfactorily. Some doubt is still expressed, however, as to the commercial success of the electrolytic processes for the production of bleaching powder and alkali.

Last year was an unprofitable one for the English chemical industry, and the outlook for 1898 is a bad one. There is, consequently, much prospect of a curtailment of production. The development of the chemical industry in America is being felt severely by the English manufacturers, who are seeing one of their best markets rapidly disappearing.

Sulphate of ammonia opened in 1897 at £7 10s. per ton, advancing to £8 10s. in March and receding subsequently to £7, the close in June being £7 10s. per ton. The entire clearance of the stocks which were carried over from 1896, and the steady absorption of production, the increase in which seems checked for the present, aided by speculative sellers at low prices having been obliged to buy, resulted in an advance to £9@£9 5s. per ton, which was maintained. An increase of 30,000 to 40,000 tons in the world's consumption is believed to have taken place during 1897, chiefly caused by the price of nitrate of soda having been 10s. to £1 per ton above that of sulphate during part of the season.*

The 23d annual report of the Chief Inspector of Alkali Works in the United Kingdom, Mr. R. Forbes Carpenter now filling this position, shows that in 1896 the number of alkali works was 98, against 101 in 1895; fiber-separation works increased from 38 to 44; arsenic processes decreased from 44 to 37, and "other works" increased from 964 to 976. The manufacture of caustic soda and chlorine by electrolysis was chiefly experimental, but progress was made at the works of the Castner-Kellner Alkali Co. for starting in 1897, and the Hargreaves-Bird electrolytic process is to be conducted at Chauny by the St. Gobain Co. In the manufacture of chlorate of soda Mr. J. Hargreaves has applied on a large scale his process for chlorinating hydrated sodium carbonate directly in an absorbing tower, in which lixiviation of the products to remove sodium chlorite is also conducted, the intermediate production of calcium or magnesium chlorate being avoided.

A nitric-acid chlorine process has been successfully carried out in Middlesbrough, bleaching powder of the highest strength having been produced; but there is a serious drawback in the cost of concentrating the large quantities of weak sulphuric acid resulting from the decomposing operations. It is suggested that the Kessler plant for rectifying the acid would prove serviceable. The "Kessler" plant is described as working well and with great regularity. An acid of about 97% monohydrate is produced, not of the best "color and brightness," but well suited for application in nitrating and in some other operations.

The continuous processes adopted for rectifying sulphuric acid in glass, porcelain, or enameled iron beakers, stepped in series, have not given entire satisfaction to the inspector, owing to the liability to the escape of acid by breakages or corrosion. In Scotland, the production of sulphuric acid has been active, notwithstanding the restricted condition of alkali works, as is shown by an increase of the quantity of pyrites burned of 1817 tons over the preceding year.

The loss of ammonia in the production of soda ash (ammonia-soda process) has been reduced, but is still equal to 2% of sulphate per ton of 58% alkali, which is equivalent to the loss of 5395 tons of sulphate of ammonia for 1896. An increasing amount of ammonia is used in the manufacture of cyanides.

The amount of salt decomposed in the Leblanc and ammonia-soda processes (including Scotland) was as follows:

	1894.	1895.	1896.
	Tons.	Tons.	Tons.
Leblanc process	434,298	408,173	360,929
Ammonia-soda process	361,603	428,614	431,577
Total	795,901	836,787	792,506

---

* Thomson Aikman Jr.'s annual report, Dec. 31, 1897.

The production of sulphate of ammonia, inclusive of that lost or applied in manufacture without going upon the market, was as follows:

	1894.	1895.	1896.
	Tons.	Tons.	Tons.
Gas works	118,634	119,645	127,498
Iron works	10,075	14,588	16,511
Shale works	32.891	38,335	37,822
Producer-gas, coke, and carbonizing works	8,448	7,083	9,078
Total	160,048	179,651	190,909

The ammonia from gas works did not increase so much as might have been expected from the increased production of gas. This is attributed to the introduction in part of the gas derived from the interaction of incandescent coke and steam, from which no ammonia is obtained. In America this displacement of coal gas has reached more than 70%; and it is anticipated that the displacement will go on in the United Kingdom at an increasing rate, even if there be more danger of poisoning from carbon monoxide with the water gas than with the coal gas. There is a prospect, however, that the supply of ammonia from other sources will be increased. In the large ironworks at Merthyr and Dowlais, in South Wales, where hitherto by-products have not been collected, changes in the machinery make it probable that in the future tar and ammonia will be recovered. The successful development, also, of Dr. Mond's process for recovery of ammonia from gaseous fuel used in melting steel is referred to. In shale distillation, the introduction of the "Pentland" retort of Messrs. Young & Beilby appears to have been the means of the salvation of the Scotch oil trade. An improved form of the Pentland retort was lately introduced, for which it is claimed that no additional fuel for distillation is required beyond the gases derived from the retort itself.

The United Kingdom exported 331,576 cwt. of alkali in 1897, against 456,534 cwt. in 1896. The shipments to the United States in 1897 amounted to 109,278 cwt., showing a decrease of 127,054 cwt., as compared with 1896. The exports of bleaching materials amounted to 101,723 cwt. in 1897, against 119,788 cwt. in 1896. The United States received 68,121 cwt. in 1897, against 81,505 cwt. in 1896.

The United Alkali Co.'s report for 1897 states that the net profit was £213,363. The dividends on the preference shares absorbed £191,174, leaving £22,189 to be carried forward. There was no dividend on the ordinary shares, as against 2% last year, with £40,000 to the reserve fund. A further sum of £50,000 was transferred during the year to the depreciation portion of the reserve fund, making a total of £650,000.

THE AMERICAN CHEMICAL INDUSTRY.

BY HENRY P. WEIDIG.

LIKE all other industries of the United States the chemical industry has made enormous progress, and its chemists have become more and more masters of the fundamental branches of inorganic manufacturing chemistry, especially sulphuric-acid manufacture, and more recently soda-making. While in the former line we have been independent for many years, in the latter the developments are healthy and a rapid growth has commenced. England, which has already lost almost all of the German market in soda compounds, is viewing with apprehension the increasing advancement of the American product, and the close of the century may witness the beginning of American soda-ash exportation.

Sulphuric Acid.—In regard to sulphuric-acid manufacture there is not much to be said which is new.* The improvements so exhaustively described in Vol. III. of THE MINERAL INDUSTRY are still only great on paper, and in spite of the numerous patents concentration is generally conducted in platinum as the only reliable method. The only new idea which has worked successfully could give no prospect of a reduction in price, but rather an increase; this was the platinum-gold kettle of Heræus, and with this the writer has obtained most excellent results during five years.

The insertion of intermediate towers to increase the daily production seems to have proved successful, and excellent results are at hand from a factory in Norfolk which was built several years ago for the Virginia & Carolina Chemical Co. by W. Wilke, of Buffalo. On the other hand several manufacturers in Baltimore have discarded them. The "plate tower" of Lunge has not been able to gain a footing in this country for this purpose, probably on account of its high price; generally the towers are built of lead and are supplied with an amount of draft proportional to the size of the chambers.

In regard to "fans" the reports are also conflicting. One manufacturer claims to save 35% of chamber space, another removes them after a trial. With the tower system of Barbiér there also seems to be some difficulty. Anyway it is nowhere in operation.

Thus we see, along the whole line, new ideas put into operation to improve the old simple process of sulphuric-acid manufacture and concentration, but seldom do we see any real advantage of a single apparatus prove lasting. For the United States that arrangement is best which requires the least attention. With our high wages it is still profitable for small works to burn sulphur instead of pyrites, since the saving in wages amply covers the small excess in the price of sulphur as compared with pyrites.

There are at present 11 firms in Baltimore manufacturing sulphuric acid, and their production amounts approximately to 340 tons of acid of 50° B. daily. Of this amount about 25 tons find application in the chrome works, copper works and soda-water factories, and about 15 tons are exported. About 300 tons daily are used in the manufacture of superphosphate, which corresponds to 180,000 tons per annum. Besides this, extensive quantities of blood, tankage, bone, bone-ash, and natural guano are used, which, including the different potassium salts and saltpeter, brings the amount of fertilizer produced up to approximately 300,000 tons per annum. Exact figures are not obtainable at present, but I believe these to be within 10% of the truth. Six of the 11 factories, having a production of 164 tons of 50° acid, still burn sulphur, while three burn Spanish ore and two burn Virginia ore with a combined production of 176 tons per diem.

---

* Refer also to the articles on "Pyrites" and "Sulphur" in this volume.

As far as the equipments of sulphuric-acid plants are concerned, it follows that all those burning pyrites have both Glover and Gay-Lussac towers. Of those burning sulphur four have complete arrangements, while in two the towers are either completely or partially missing. The best managed concerns use 1 lb. sulphur per 24 hours to 12 to 15 cubic feet of chamber space. Plate towers could not improve much upon this. An attempt was made to use fans in the largest concern. As they did not give satisfaction, they were removed again, as was done also in Richmond, Va.

Nitric Acid.—In this industry, also, little has happened which is new. Valentiner's vacuum process has not been able, up to this time, to gain any footing, and Hart's glass condensation also has found only some solitary beginners. While in Germany Rohrmann's cooling coils are generally used, the jars are still preferred in most plants in this country. The Gutmann's condensation plant, which is in use in England, has for the United States the fault that the separate parts are too numerous and that almost as many pieces must be held in reserve as there are in operation. One firm in Newark has placed its nitric-acid plant in the second story, and has thereby saved a considerable amount of labor. The acid has free fall until it runs into the carboys bleached, and no pumping or handling is necessary. The closed-kettle retorts are charged mechanically from above. All "waste gas" from bleaching or from the process is absorbed by sulphuric acid in a 40 ft. high 2 ft. wide Gay-Lussac tower, consisting of earthenware pipes filled in the usual way with coke. This is brought to the Glover tower of the sulphuric-acid plant. The gases, respectively the nitrous acid of the end of the system and of the bleachers, of a plant with a consumption of 8000 lb. of niter per day are sufficient for a sulphuric-acid plant burning 5000 to 6000 lb. of sulphur per day. Naturally the small Gay-Lussac tower is placed next to that of the chamber system, saving in this manner all extra tanks, etc. Here, too, on account of the greatly diminished profit, the saving of labor is mainly considered.

Carbonic Acid.—The manufacture of liquid carbonic-acid gas has in a few years become a flourishing industry in this country. This was first manufactured in 1884 by Chas. Cooper & Co. At present over a dozen factories are employed in its manufacture. The crude material is Grecian magnesite, the freight rates prohibiting the use of the domestic mineral, which is found in Ohio and California. A small amount of carbonic acid is made in San Francisco, however, from California magnesite. (See article on "Magnesite.")

A serious revolution is threatening this industry through the attempts of the brewers to collect the carbonic-acid gas generated by the fermentation, purify it, and compress it. The process has at present been introduced into several of the large breweries, and has proven so successful that there is no promise of a profitable future for the manufacture of carbonic acid from magnesite.

In the manufacture of carbonic acid from magnesite the gas is set free either by means of heat or by dilute sulphuric acid. In the former case calcined magnesia is the by-product; in the latter an "Epsom salt" completely free of chlorine is crystallized from the mother liquor.

THE MANUFACTURE OF SULPHURIC ACID WITHOUT LEAD CHAMBERS.

BY GEORGE LUNGE.

THE earliest manufacture of sulphuric acid undoubtedly took place without lead chambers. As far as we can follow it, sulphuric acid was first made by heating calcined copperas or some other form of crude ferric sulphate; in this case a fuming oil of vitriol would be obtained. When, later on, the preparation from burning sulphur had been discovered, this operation was carried on by means of glass bell-jars or retorts. Sulphuric acid thus manufactured formed an article of trade more than 150 years ago, but evidently on a very small scale. It is one of the best known facts in the history of science, as well as in that of technology, that the invention of lead chambers by Roebuck in 1746 laid the foundation of what was soon to become the greatest of all chemical industries, and is likely to retain that position, as far as we are able to judge at present.

Up to this day practically all sulphuric acid, apart from fuming oil of vitriol, whether it is sold as such or employed for some other purpose at the works where it has been manufactured, is made in lead chambers, certainly differing enormously from those constructed by Roebuck at Preston Pans. But for a long time past efforts have not been wanting to dispense with that extremely cumbrous and expensive apparatus. In one respect success has been undoubtedly reached. The "direct" manufacture of sulphate of soda (saltcake) by the process of Hargreaves and Robinson does away with the lead chambers for that, very large, quantity of sulphuric acid which would have otherwise served for decomposing common salt in the ordinary saltcake pans. The Hargreaves process has been worked out to great perfection, and has also been economically successful, but for all that it is worked at comparatively few places. The reasons why it has not been able to supplant the old saltcake process are principally the great initial cost of plant, and the fact that it is not easy to obtain the hydrochloric acid in a very strong state, although it is sufficiently concentrated for making chlorine by the Weldon process. Moreover its success was only assured by the time when the demand for saltcake had begun to shrink, owing to the rise of the ammonia soda process, which made manufacturers loath to embark in further developments of the Leblanc process. Anyhow the direct process could not replace the lead chambers except for the manufacture of saltcake, and had nothing to do with any other use of sulphuric acid, especially in the finished state.

Most inventors in this line have retained the ordinary process of burning sulphur or pyrites, and oxidizing the sulphurous acid by the mediation of the oxides of nitrogen. Their aim has been generally only that of carrying out this process in a much smaller space than is now required. At present it is usually not economical to employ less than 20 cu. ft. of lead chamber space for each pound of sulphur burned in 24 hours (1.2 cu. m. per kg.). Some factories employ less than that space; but many require more, and most of the former probably do so from necessity, not from free choice, and pay for it by a smaller yield of acid, and in all cases by a larger consumption of niter. Some years ago at some French works the "intense production" was introduced, in which from 30 to 50% of acid was made in excess of the usual quantity in a given space; this was brought about by very largely increasing the supply of niter to the chambers, recovering this by much larger Gay-Lussac and Glover towers than are otherwise used. The extra cost of plant for these towers must have to a great extent swallowed up the saving in lead-chamber plant; moreover the wear and tear of the Glover tower and of the chambers themselves is much greater than in the usual style of working; and although it has been asserted that the yield of acid and the consumption of niter are quite as good as elsewhere, there seems to be some doubt on this point. Anyhow the "intense production" has not made its way to any extent, and has perhaps been already abandoned even in the place of its origin.

Another way of reducing the chamber space has been looked for in feeding the chambers, not with common atmospheric air, but with pure oxygen. This was patented in England by Terrel, Hogg, and Tomlinson, in 1871. A little later Bode mentioned this, but with great doubts about its feasibility; and it was again patented in 1886 by A. and L. Q. Brin. The writer, who has always considered this process as utterly hopeless, has nevertheless included it in a patent taken out by Ellice-Clark in 1888, intended to protect the manufacture of fuming sulphuric acid by the platinum-asbestos process in this special way, which, with the prices ruling at that time, was not quite so absurd as it might seem with the present prices of fuming oil of vitriol. Both the Messrs. Brin and myself had in view oxygen prepared by the baryta process. Others have thought of electrolytic oxygen (Messel's patent, 1878). Scheurer-Kestner in 1890 published a calculation of the cost of electrolytic oxygen, according to which the oxygen required for producing one ton of real sulphuric acid would cost 176 fr. (nearly $35), that is not much less than six times the value of real sulphuric acid in the shape of chamber acid. This calculation would be considered much too high at present; but the difference between the value of the acid and the cost of the oxygen must be absurdly high in any case. It cannot be seriously expected that posterity will manufacture its sulphuric acid with pure oxygen.

We now come to a series of inventions in which the generation of sulphurous acid takes place in the usual way, but the "burner gas" is not passed into lead chambers, but into a series of earthenware or lead towers, or some other shape of apparatus filled with some acid-proof material, offering a very large surface to promote increased contact among the ingredients of the gaseous mixture. These attempts seem to begin with an English patent of MacDougal and Rawson in 1848, followed by a number of others. The last patents in this line are those of Hannay (1888), Durand and Huguenin (1890), Barbier (1892), Staub (1894), and probably some others. These recent inventions have been probably suggested by the success of the "plate towers," which are to be mentioned later on, and which are not intended for the total suppression, but for a reduction of the lead chambers to a smaller size. None of the plans for entirely doing away with the lead chambers have been successful in the long run, although some of them have been actually carried out and worked for some time. In every case the escape of sulphurous acid was too high, and there was an intolerable consumption of niter. This has been most emphatically the case with the latest of these "inventions," which has been only a few days at work, and the patent for which has been cancelled by the German patent office as being no invention at all.

It would be too much to say that it is absolutely hopeless to manufacture sulphuric acid without lead chambers in a series of towers or otherwise. But whoever has carefully followed the recent researches on the nature of the sulphuric-acid manufacturing process, and the theories developed out of these observations, must be aware that in the first stage of manufacture, when the gases, vapors, and liquids (the latter in the form of a mist) are still concentrated, and can easily react upon one another, the curve indicating the formation of sulphuric acid rises rapidly. It appears to me that this stage of the manufacture not merely can be carried out without any artificial assistance, but it ought to be so, since here no extraneous help is needed for promoting the mutual reaction of the gases, etc., and it is the most economical plan to allow these to act upon one another in a simple box, formed by means of the only available material, namely, a lead chamber. The attempt at concentrating this reaction in a much smaller space, by means of towers filled with contact substances or some similar plan, invariably leads to the development of too much heat, and possibly to other causes for producing false reactions, and thus losing both niter and sulphuric acid.

It is therefore probable that the lead chambers will never be totally abolished. On the other hand it is not merely possible, but it has been proved to be quite feasible, to cope with the task of reducing the space for generating sulphuric acid at the point where the greater part of the sulphuric acid has been taken out of the gases, together with a corresponding quantity of oxygen, and where the curve indicating the formation of sulphuric acid approaches the horizontal.

Although the latter fact was not, and could not be, known to former inventors, some of these were certainly on the right tack by trying to promote the contact among the ingredients, but they failed in consequence of their not understanding the proper means for attaining their object.

This eminently holds good of the employment of coke for filling the lead chambers with the above-stated object, as carried out by Gossage and some others. Ever since Gay-Lussac invented the coke tower, and Gossage gave it the importance which it now possesses, coke has enjoyed the reputation of being about the best means for producing a surface contact, and at the same time of being indifferent to chemical influences. It is strange that the hundredfold experience of the necessity of repacking coke towers, in consequence of the disintegration of the coke, did not seriously shake that belief in the chemical stability of coke until the author proved (in 1885 and 1890) that coke is a reducing agent for the oxides of nitrogen, whose action greatly increases with the temperature, so that its employment within a lead chamber must be completely avoided, and it is even to be shunned for the warmer part of a Gay-Lussac tower, although it does practically no harm in a second cold Gay-Lussac, in which there are also very little nitric oxides to be acted upon. This explains why Gossage's and other inventions in that direction were bound to fail.

Other inventors employed better acid-resisting material, like glass or earthenware, but they did this in an incomplete manner, and their mechanical means of applying those matters were so imperfect that their structures frequently collapsed after being some time at work.

Some years ago much stir was made by a plan proposed by Thyss of interposing between the single chambers a set of leaden towers, provided with a number of perforated lead shelves. No doubt this would cause a better mixture of the gases; but that special plan was bound to miscarry, and it was abandoned after several trials. Lead is only to be considered an acid-proof material in the manufacture of sulphuric acid if it be exposed to the action of the hot acid vapors merely on one side, the other side being protected by air-cooling or otherwise. If it is exposed on both sides to the hot vapors it is quickly corroded, and this actually happened very soon with the shelves of the Thyss towers. In fact, to that extent this apparatus was a step backward in comparison with Ward, Versträet, and others who had employed glass or earthenware for their contact surfaces. Moreover, as we now know through my own and Sorel's researches, the contact with hot surfaces cannot do much good.

This last-mentioned objection, together with several others, also holds good with some of the inventions, following upon that of the plate towers, intended to work upon the same principle as these, but doing so in an imperfect form. The "plate towers" have been described in various publications, to which I must refer, as well as to the summary given in my *Sulphuric Acid and Alkali*, Vol. I., pp. 347, 821, and Vol. III., p. 689. There have been some quite recent publications on the results obtained with plate towers from other sides, especially by Lüty and by Niedenführ, in the *Chemiker Zeitung* and in the *Zeitschrift für angewandte Chemie.* These towers have one thing in common with all their predecessors and successors, namely the principle of thoroughly mixing the ingredients of the chamber atmosphere. In realizing this principle, their construction pays particular attention to a condition not clearly understood by their predecessors—that it is expedient to produce as many shocks as possible against solid surfaces.

It follows from my theory of the chamber process that the gases alone are not active; the liquid portions of the chamber atmosphere, floating about in the shape of mist, play a most important part. These liquid particles must be forced to react upon one another, as well as upon the surrounding gases, and this is best done by forcing them to pass from the nebulous state into that of real drops, running together, which is best done by causing them to impinge on solid surfaces. Of course this takes place to some extent in any of the proposed plans, but nowhere so systematically and thoroughly as in the plate towers. But these differ from their predecessors in another important respect, namely, by providing for feeding the towers all the time with dilute acid, which supplies the water required for decomposing the nitroso-sulphuric acid (as required by my theory), and which at the same time carries off the surplus heat generated by the chemical process, and adverse to its proper working. It would, however, not have been sufficient to recognize the right principle for the case in question; it was just as necessary to provide the technical means for carrying it into practice. We have seen that neither coke nor lead will do for the interior fitting of such apparatus. Earthenware, if really first-class, will stand the hot acid vapors and liquids; but it is also necessary to devise the best shape for applying it. This is done, as experience has proved, to quite the requisite extent by the construction of the "plates," which I may assume as sufficiently known by the name of "Lunge-Rohrmann" plates, the American patents for which are held by Mr. H. J. Davis of New York. From the independent testimony published by several competent men, it follows that that system, which has now been in use for six or seven years, has entirely borne out the test of experience, and that in this way the chamber space may be actually reduced by one-half or even by two-thirds.

It was quite natural that the success of the plate towers should encourage other inventors to proceed in the same direction, although the patents prevented them from doing so to the full extent. To this category belong, for instance, Hacker and Gilchrist's "pipe towers" and Staub's "Kegelthürme." I am not in possession of practical results obtained with the former. For the latter it was claimed that they could altogether supplant the lead chambers; but in this they have signally failed, nor is there any certain evidence on record even of their success in doing partial work.

We now turn to a totally different kind of inventions—to those which entirely dispense with the ordinary action of the nitrate of soda as oxygen-carrier, and which bring about the combination of sulphurous acid and oxygen by means of catalytic action, that is, by contact with hot platinum in a very finely divided form. This reaction in the first instance produces anhydrous sulphur trioxide which can be turned into fuming oil of vitriol, and this is now the object always aimed at. But the first inventors who made use of this reaction hardly thought of doing so for the production of fuming oil of vitriol, for which there was very little demand at that time; they intended to make ordinary sulphuric acid without the expensive plant of lead chambers. This was actually tried on a large scale at the Oker works, in the Harz; but the catalytic process entirely failed to compete with the lead chambers.

In the year 1875 the memorable publication of Clemens Winkler, at a time when the demand for fuming sulphuric acid had immensely increased by the development of the coal-tar color industry, and could not be met by the Bohemian works with their ferric-sulphate process, again drew attention to the catalytic process, which he greatly improved by introducing platinized asbestos. A great number of chemists threw themselves into this field, and many separate inventions, patented or otherwise, were made, some of which have been successfully worked on the large scale and have maintained themselves up to this day. Hardly anybody, however, at that period, or for almost 20 years subsequently, thought of applying the catalytic process to anything else than to the synthesis of anhydrous sulphur trioxide. How far it was from the thoughts of chemists at that period that this process, after its failure at Oker, might be applied to the manufacture of ordinary sulphuric acid, is best proved by the fact that Winkler considered it as essential that an exact mixture of equivalent proportions of SO_2 and O should be prepared by decomposing concentrated sulphuric acid at a bright red heat; and this plan has been actually followed at several factories for many years. It was not very long after Winkler's first publication that attempts were made to apply the platinum process to ordinary pyrites-burner gases; but for a long time the success in this direction was very limited. Gradually, however, improvements were introduced. One of the most important of these seems to have been the application of pressure, by Schröder and Hänisch, in 1888, for the purpose of promoting the combination of SO_2 and O. In this case the mixture may be diluted with nitrogen and an excess of oxygen; that is, ordinary burner gas is converted to a great extent into SO_3, but never completely. Probably 67% must be considered very good work, and the remaining 33% of sulphurous acid must be sent into lead chambers, together with better gas from other burners. The contact substance is still platinized asbestos in one shape or another; if the fluedust is entirely kept out, the contact substance can serve for a number of years without any necessity of renewal. It would seem that the Badische Anilin- und Sodafabrik has made most progress with this process; it was even asserted that it was able to turn out SO_3 by its process cheaper than in the shape of ordinary chamber acid by the lead chambers, and that it was going to abolish these altogether. It would not seem that this has been carried out, although the company preserves the strictest secrecy about its doings.

As far as I can make out, the present state of the case is this: The Badische, and perhaps some other manufacturers, make fuming acid by the catalytic process at so low a price that it pays them to do away with platinum stills or other apparatus for concentrating the chamber acid, made in the old way in lead chambers, by means of evaporation, and to bring this acid up to strength by adding to it fuming acid made by the catalytic process. This in any case involves the use of chambers for working up the residual gas from the catalytic process; and as this is hardly possible with such weak gases, it would anyhow mean burning a good deal more pyrites and uniting the rich gas with the poor gas from the other process in order to introduce both into lead chambers. But, apart from this necessity, it does not appear that it is as yet cheaper to make acid when it is not required to be above 60° B., as furnished by the Glover tower, by any other than the lead-chamber process, even at the above works. The immense majority of factories not merely make all their chamber and Glover acid by the old process, but they also concentrate it in the old way. Since it is now possible to greatly reduce the chamber space in the above-described manner, there is all the less reason for departing from the old process, which furnishes acid of moderate concentration at such a low figure that there is no chance of any great saving to be effected in that line.

It is worthy of remark that the process of producing monohydrated sulphuric acid by freezing it out, as proposed by the author, is still operated by the Griesheim works, which are so completely informed of all that is going on in this line that it may be safely assumed that they find it still cheaper than the plan of preparing that acid by means of catalytically-produced fuming acid.

THE HARGREAVES-BIRD ELECTROLYTIC SODA PROCESS.

BY EDWARD WALKER.

IN THE MINERAL INDUSTRY, Vol. II., was given a brief account of a new electrical process for producing soda and chlorine or bleaching powder from brine, the invention of Mr. James Hargreaves of Widnes and Mr. Thomas Bird of Liverpool, England. This account was necessarily somewhat theoretical, as the process had not been submitted to practical tests. During the five years that have since elapsed the process has been developed, and at the present time it is a proved success, the company owning the process having worked at a profit during 1897 with only one cell and with a plant that is more or less experimental. The proprietary company, the General Electrolytic Patent Co., Ltd., of Farnworth, Widnes, now intends to build a plant on a large scale.

Briefly the apparatus may be described as a cell in which the anodes are composed of the usual carbons, and the cathodes of large surfaces of copper-wire cloth. In intimate contact with the internal surfaces of the cathodes are diaphragms, the structure and composition of which are the essence of the whole invention. These diaphragms, which are about ¼ in. thick, are made of asbestos fiber incorporated into a solid sheet by a silicate composition. They are hard and of considerable strength, and are not in any way of the nature of a filtering medium. By the principle of osmosis they allow the sodium to pass through, but they are quite impervious to the salt electrolyte. Originally the cells were small, but now the two diaphragms are made 10 ft. long and 5 ft. high, so that their total area is 100 sq. ft. The brine is pumped into the anode chamber at the bottom of the cell, and it leaves at the top through the same outlet as the escaping chlorine. The sodium passing through the diaphragms and cathodes meets a stream of steam in the cathode chamber and trickles down to the bottom as a solution of caustic soda, or, as in the present cell, it meets a stream of steam and carbonic acid and trickles out from the bottom as a strong solution of carbonate of soda. The brine as it leaves the cell is either resaturated with salt or is returned to the brine well. The chlorine is led to the lime chambers, or is sent to reservoirs where it can be compressed. The carbonate of soda solution is so strong that it can be crystallized out at once as soda crystals. In the Leblanc and ammonia-soda processes soda ash is made first and then the crystals, and as the latter are the more salable form the present process has an advantage over the others. The atmosphere of carbonic acid in the cathode chamber is obtained in the present plant by the exhaust from the gas engine which drives the dynamo, but in a steam-engine installation it would be obtained from the boilers.

The present cell with its 100 sq. ft. of diaphragm and cathode decomposes on an average 237 lb. of salt per 24 hours. It produces from this 395 lb. of bleach containing 37% chlorine and 578 lb. of soda crystals or 213 lb. of soda ash. The current used averages 2300 amperes at a pressure of 3.90 volts at the cell or 4.70 volts at the dynamo. The electrical horse-power is 14½, which at ½d. per hour (the usual cost in England for large installations) would come to 7s. per day. The cost is of course somewhat greater in the present cell. The theoretical yield of soda ash from a current of 2300 amperes for 24 hours is 220 lb. so that the actual yield is remarkably high, showing an electrical efficiency of 97%.

The process is a continuous one and requires practically no skilled supervision. The usual practice has been to keep the plant going night and day for a month, and then open it and if necessary change the diaphragm. At the time of writing (April 19) the cell has not been opened for 56 days, and everything is still progressing in the most satisfactory manner. The carbon anodes have been in use since 1897, so their life is satisfactory. The chlorine outlet is arranged in such a way that the gas does not come into contact with the anodes or supporting conductors, thus reducing the liability of the anodes to destruction. There is therefore nothing about the plant which requires frequent renewal.

The diaphragms are easily made and do not need any specially skilled labor in their manufacture. They are made much on the same principle as is used in the manufacture of paper, and the hardening of their mass into a compact sheet is easily effected. The exact nature of the incorporating material, called the "silicate composition," is the only detail which the inventors and managers are unwilling to divulge. The cost of manufacture of these diaphragms is not great, for the cost of two of 50 sq. ft. each is, under present circumstances, only 10s. 6d. This is due to the fact that the materials and plant are cheap and that no special workman is required. In the estimate of costs in connection with the whole process, the lives of the diaphragms are put at one month, but, as already mentioned, their duration promises to be much greater.

The initial cost of the salt which has been used hitherto varies from 6 to 9s. per long ton, and the weak brine has been enriched from time to time with more salt added. In the new plant which is contemplated it is intended to use brine direct from the wells, such as is obtainable anywhere in the Cheshire basin. This natural brine is a saturated solution, and its cost is extraordinarily low, for one long ton of salt as contained in the brine costs only 3d., delivered to the cells. In this case about 75% of the salt would be extracted from the brine and the exhausted solution returned to the wells.

One long ton of salt produces 1 ton 11 cwt. of 37% bleach (allowing for 5% loss of chlorine) and 18 cwt. of soda ash. The cost of decomposing this ton of salt would be: Power £3 10s., salt 3d., diaphragms 3s. 6d., labor, interest on capital, allowance for depreciation of plant, etc., about £3; bringing the total to about £6 15s. This cost per ton of salt is equivalent to about £2 15s. per ton of bleach and soda ash. If soda crystals were made instead of ash the price per ton of products would be less, say £2 5s. The present market values are respectively £6 and £4 17s. 6d. In actual work it is intended with 250 cells to produce annually about 12,800 tons of bleaching powder, 3700 tons soda ash, 8000 tons soda crystals, and 700 tons of caustic ash, and the average cost of products is estimated at £2 5s. per ton. This is also intended to produce chlorates and similar compounds. In the above estimates it is supposed that a steam plant is used, but with a gas-engine plant and special generators of producer gas, it is possible to still further reduce the cost of power.

As regards the quality of soda produced the analyses show a high purity. The soda ash averages 97.7%, the remaining constituents being salt, 1.02%; sulphate of soda, 0.76%, and sulphite of soda, 0.52%. The latter two are accounted for by the fact that gas-engine exhaust is used for carbonating. The same impurities would be present if furnace gases were used. Probably with a large installation some arrangement could be made to extract much of the sulphurous acid from the carbonating gases.

The question as to the cost of the plant is a comparatively simple one, for each cell would be independent of others and their manufacture is not difficult. Any breakdowns would be confined to a small fraction of the plant, and renewals could be effected gradually without stopping work. The space occupied is also comparatively small, for each cell is not more than 3 ft. wide, including foundations, etc., and 250 of such cells could stand on an area of 35,000 ft.

PROGRESS IN ELECTROCHEMISTRY IN 1897.

BY H. BORNS.

THE problem of *Electricity direct from Coal* once more came before the German Electrochemical Society last summer, at its annual meeting at Munich. The question, whose introduction naturally fell to W. Borchers, has not advanced much. In his continued researches on coal-gas cells, Borchers had first reverted to his original arrangement, a cell containing Cu_2Cl_2, divided into three compartments by two partitions reaching not quite to the bottom; CO was blown into the two outer compartments, which had copper electrodes, and air into the inner, which was provided with a carbon electrode. It will be remembered that Borchers did not use a porous partition which most of his critics adopted. In order to insure better contact between the liquid and gases, he introduced revolving drum electrodes, resembling gas meters, and provided for lively circulation. This, however, produced a mixture of the original Cu_2Cl_2 and the $CuCl_2$ formed, which he could not stop by means of gelatine and mercury without impairing the efficiency of the cell. These experiments finally induced him to try Weldon mud, manganese dioxide suspended in a solution of lime and chloride of calcium. A cell or case of iron or lead is filled with this mud into which air is blown; the case further supports a porous cell containing Cu_2Cl_2 and a little sulphuric acid and a carbon electrode in the shape of an inverted T, and is fed with CO. Such a cell gave with 100 ohms in circuit an electromotive force of 0.61 volt and 0.01 ampère, and with 1 ohm, 0.225 volt and 0.5 ampère, etc. The current was certainly not due to a neutralization of the lime by the sulphuric acid, but one cannot say that the actual oxidation of the CO at the electrodes has been established beyond doubt. Borchers proved that little carbonic dioxide, but a good deal of oxalic acid is formed, which is not surprising, though nobody seems to have thought of it. He experimented with various gases, coal gas, hydrogen, etc., and solutions; his CO was generally producer gas; a modification of his last cell consists of two concentric revolving cylinders. It is satisfactory that Nernst and some of the chemists of the Elberfeld color works will continue this investigation for which Borchers, having been honored by a call to the Technical College at Aachen, where he is to create a department for metallurgy, will have no leisure to spare for some time.

Like everything else, coal gas and coal cells are far older than one would believe. Borchers, Case, De Fodor, Reed, and others, have unearthed many anticipations, not a few of which are very instructive, including Westphal in 1880, Blanchard in 1882, Archerean in 1883, and Bradley in 1888, while much further back, in 1801, Brugnatelli of Pavia built up a voltaic pile entirely of carbon, there being *hydrogeno flogogenato* (hydrogen carbon) and *thermo-ossigenato* (thermo-oxidized carbon) plates. Among the most recent contributions to the question should be mentioned Case on "Gas Batteries without Platinum," and Hellweg and J. H. Hall on "Jacques Cells."

S. H. Short has boldly gone a step further still with his combined gas and carbon electric generator. A hopper feeds coal into a gas retort, from which the coke passes into the retort cell, in which fused lead serves as electrolyte. The proposal of Kirkpatrick-Picard to dip carbon electrodes into fused litharge, or litharge and caustic alkali, is less ambitious. The electromotive force of such combustion cells made of iron or other metal has been investigated by Reed, with whom Liebenow and Strasser agree on the whole as to the part played by the metal in the passive state.

Of other primary cells little need be said; but attention may be drawn to Fr. Mayer's depolarizers. These are the halogen derivatives of hexamethylentetramin, discovered by Legler. Their chlorine (50% Cl) and iodine (79% I) compounds readily unite with hydrogen; mixed with manganese dioxide, carbon, kieselguhr, etc., these substances are said to make excellent depolarizers. Rufz de Lavison arranges galvanic cells with revolving disk electrodes in such a way that hot air from a lamp placed between two batteries plays about the electrodes without heating the electrolyte. In order to prevent effervescence of the salts, Cammermann smears the parts with a mixture of white vaseline and ozokerite. Zehnder does the same to those parts of the electrodes of storage batteries which project from the acid.

Ansell, Appleton, Trowbridge, Wade, Zehnder, and others have been writing on the treatment of *Secondary Batteries.* The Vienna Electro-technical Society recently paid a visit to the accumulator works of Wüste & Von Rupprecht at Baden, near Vienna. The pasting is done there either by hand on tables standing under ventilating shafts, on which one man can finish 45 plates in 10 hours, or by machinery, when three men can turn out 250 plates in the same time. The men wear respirators, and are not kept at this work for more than a fortnight. All the soldering, even of the lead lining for the forming vats, which are arranged in five rows of 45 vats, is done by means of a hydrogen apparatus. The works make a specialty of accumulators for electric railways; their carbon rod works are said to transform about 40 metric cwt. of naphthalene into soot every day.

To freshen up oversulphated plates, Dannert and Zacharias place them in a solution of barium hydrate and then put them under current, when the crust of barium sulphate which has formed is said to split off, while the excess of baryta which has entered into the plate is expelled again.

A. Coehn, whose researches on the electrolytic solution and deposition of carbon have borne scientific fruit in so far as he has settled the electrochemical equivalent of carbon ($C_4=3$), has patented his process of dissolving carbon in sulphuric acid of suitable temperature (60° C.) and concentration (1 : 1), and he recommends carbon-plating and carbon-plated accumulator electrodes. Ingenious switchboards for secondary cells have been introduced by the Gamewell Fire Alarm Co. of New York, and by Planzol. The latter arrangement permits of rapidly testing any single cell of large batteries. The French Northern Railway Co., which has about fifty of these commutators in use, generally tests a dozen cells of a large battery to see whether everything is all right. Ansell recommends a frequent and regular use of the hydrometer and of portable incandescent lamps, so that any fault may be spotted; also resistance tests at regular intervals to avoid current waste.

According to the researches of Von Knorre the often-proposed addition of manganese peroxide to lead peroxide is a decided mistake. Manganese salts act as oxygen carriers, and for this reason such salts hasten the self discharge of accumulators. The Gülcher cells, whose plates consist of a fabric of lead wire and asbestos or glass wool, the frames being wound with glass wool, have been commented upon favorably by Peukert and others. The Blot plates, which consist of strips of lead foil, alternately flat and embossed and rolled up, have also been praised by Arnoux, Nerville, and Picou. These favorable statements need not be doubted; but the plates remind one, in their delicate structure, of the De Kabath and Méritens plates of years ago which did not last long. In the Tudor cells large electrode surface is realized by providing the cores with high wedge-shaped ribs.

Convenient glasses for accumulators in which the plates find direct support in the glass walls have been introduced by Beyer & Co. of Kohlfurt. The Electrical Power Storage Co. of London has adopted a clever hydrometer, designed by Hurst. An ordinary hydrometer is placed in an outer glass cylinder, fitted with a rubber balloon above and a rubber tube extension below, so that the liquid may be drawn from any part of the cell. A method for charging split batteries with contact relays at each end by alternating currents has been devised by Behrend.

In his paper on "Accumulators on Rails and on Ordinary Roads," L. Epstein* expressed himself as hopeful regarding the future of road vehicles, but he did not offer many facts in support of this view. How little one can really derive from statements as to capacity per pound has been pointed out by Rankin Kennedy in connection with that paper. Comparative tests must refer to really similar boxes or cases of approximately the same bulk of liquid and the same number of plates charged and discharged under similar conditions. The confidence placed in good batteries on the other hand is well illustrated by the great number of large installations of accumulators that have been made, notably in the United States.

Pauli once more suggests a combination of metallurgical separation and generation of electricity after the following manner: Stibnite is dissolved in hydrochloric acid, the solution is used in a cell with the combinations: iron, chloride of ammonium, diaphragm, solution, copper. While the antimony is quantitatively being deposited, the electromotive force of the cell gradually diminishes from two or three volts to nothing. Kellner uses the alkali amalgam formed in the fore part of his electrolytic cell as anode in the other part in connection with a third electrode for the direct reduction of organic compounds.

The *Electrolytic Engraving* or etching of Joseph Rieder of Thalkirchen, near Munich, is quite a novelty to which everybody will wish success. The idea is very simple. Supposing we want a replica of a medal or coin. We pour plaster on the coin and heap it up so that we obtain a cylinder of plaster, 2 in. high, the curved surface of which is fitted with a sleeve of ebonite. This cylinder is placed in the bath, face upward, projecting a little above the liquid; a steel plate is then put on the top of the plaster and made the anode; the cathode is a wire spiral, the liquid chloride of ammonium containing a little iron, an anode wire having previously been dipped into the solution. The liquid is sucked up by the plaster; on points of contact the steel is eaten away, and the coin settles. The trouble comes in through the carbon in the steel, which has to be brushed off at intervals. With the strong currents which Rieder finds advantageous (10 or 15 volts and

---

* *Inst. Elect. Engineers*, London.

0.2 to 0.5 ampère per sq. cm.) this has to be done every 5 or 10 seconds, and the steel must then be replaced mathematically in position. Yet Rieder has reproduced a negative of a 20-mark gold coin in three hours. The plaster of paris is also objectionable, and therefore the difficulties of the process are great.

In Russia certain galvanoplastic processes have acquired unusual importance. Thus cards, banknotes, illustrations, etc., are printed from steel plates in such numbers that the government can supply iron from these sources to drug manufacturers.

The term *Galvanized Iron* is frequently misused. Electrolytic zinc galvanization remains costly, and though coatings excellent in mechanical respects can be obtained, they are not yet suitable for general purposes. Alexander, at Rothenfelde, deposits zinc alloyed with a little aluminum or magnesium by dissolving zinc in aluminum chloride. Karl Richter uses at Witkowitz a perfectly neutral zinc sulphate, neutralizing the last traces of acid by means of zinc white, while Cowper-Coles, whose process has been taken up by four English companies, prefers zinc dust for this purpose and further insoluble lead anodes. The many patent specifications mention all sorts of additions, however, both oxidizing and reducing agents, current reversals, etc. Large palladium-coated specula are also supplied by Cowper-Coles.

As regards *Electric Furnaces* and their products, it has been rumored that Gin, applying for a German patent for his artificial rubies (from bauxite volatilized in presence of metals), was requested to submit specimens, and that he sent blocks of 100 lb. weight. Moissan's papers in the *Comptes Rendus* have become less frequent, which is not altogether to be regretted. He has, of course, done excellent work, but just for that reason, and considering the splendid opportunities he enjoys, he might really isolate and purify the various carbides, silicides, etc., he has described so often, a good many of which were known already. It is noteworthy that the borides of the alkaline earths, of which BaB_6 is most easily obtained in the electric furnace, do not, according to Moissan and P. Williams, resemble the carbides and silicides in their chemical behavior. In trying to produce diamonds from solutions of carbon in iron under high pressure, Moissan was possibly on the wrong track. He could not force more carbon into solution by these means. Moyat, therefore, mixes carbon and iron in steel cylinders and adds liquid carbonic acid, vaseline, or other carbon compounds.

An interesting way of momentarily applying very high pressure has been devised by Majorana. Two steel cylinders, both entirely encircled by flat iron rings, are arranged in such a way that the piston of the large cylinder is forced into the other much smaller cylinder, when an explosion takes place in the former. The substance to be compressed is fixed on the tip of the piston rod and heated in an electric arc. Majorana's diamonds were of the ordinary size, however.

Liebmann advocates beryllium (or glucinum) as a rival to aluminum on account of its constancy, its high electric conductivity, and low specific gravity, 2.1; he prepares it after Lebeau, in the electric furnace in the pure or alloyed state.

Convenient electric furnaces for the laboratory have been constructed by Bonnet and Le Royer of Geneva, Switzerland. The crucible is placed in an iron cylinder, made in halves, and rests in a mixture of sugar and retort carbon.

Mourlot is engaged in a very interesting line of research. Some sulphides (copper and bismuth) part with all their sulphur in the electric furnace, silver sulphide not completely; NiS (and also CoS) is first reduced to Ni_2S, retains the last portions of sulphur with obstinacy and further combines with carbon; SnS, ZnS, CdS, AlS, are volatilized as such. It is a pity that electric furnaces are such awful power-consumers. Raoul Pictet calculates that the electric horse-power could not yield more than 4 kg. (9 lb.) of *Calcium Carbide* per day, but some inventors claim three times as much. According to Pfleger, continuous carbide furnaces are still the desideratum; according to Rathenau, the works at Bitterfeld and Neuhausen have for some time been using furnaces from which the carbide can be tapped as the iron from a blast furnace. Among the patents aiming at this is one by Pictet. Some works in the Spanish Pyrenees—Pfleger did not say exactly where—are said to have seen their electric furnaces melt away until they ordered furnaces from Frankfurt-on-the-Main. The waterfalls of the Pyrenees are being harnessed in many places; the Spanish government does not expect any royalties for the first 10 years. A very large plant for the manufacture of calcium carbide is rising on the Ebro, near the electrolytic alkali and chlorine works of the Chemische Fabrik Griesheim, now in the course of construction. The first Italian carbide works near Ivrea use Regnoli-Memmo furnaces, in which the carbon monoxide is being burned for preheating, the other desideratum of inventors; the electric resistance wires are placed in air jackets lest their heat might be lost; the carbide flows out through a central duct in the hearth block of carbon. The German Carbide Co. pays a handsome royalty for a concession under the German Moissan-Bullier carbide patent, although everybody is convinced that the patent cannot stand since there is nothing new in it. A new Calcium Carbide and Acetylene Association has been established at Düsseldorf.

The electric furnaces at Vernier, near Geneva, obtain 1,000 h. p. and more from the hydro-electric plant at Chèvres through twice four wires for diaphase currents of 2,700 volts and 45 periods. The heat evolved by the resistances is utilized for drying the raw materials. Transformers reduce the tension to 57 volts. The cylindrical crucibles, 30 in. high, 5 ft. in diameter, are placed on rollers; the six carbon electrodes weigh about 8 cwt. and are movable singly.

In Great Britain, 117 new carbide patents were taken out in the first half of 1897, but of the dozen companies only one or two are manufacturing. According to Vivian Lewes, the Acetylene Illumination Co. of Foyers Falls produces 8.4 lb. of CaC_2 per electric horse-power hour. Acetylene illumination hardly exists as yet; the muncipality of Totis in Hungary is said to be satisfied with its acetylene plant, however, and after successful experiments the Prussian railway department has resolved to adopt acetylene for train illumination. The dangers of acetylene have been investigated chiefly by Berthelot and, in a very practical manner, at the Pintsch Gas Works at Fürstenwalde. New electric furnaces, mostly with utilization of the waste heat of the carbonic oxide, have been proposed, among others by Chavarria-Contardo, Cowles, Lelièvre, Hiram Maxim, Patten (arcs constantly deflected by currents of low frequency), Price, Puteaux (reduced or increased air pressure), Siemens & Halske (ring channel between conical upper and funnel-shaped lower electrode). Joudrain combines the production of phosphorus and of carbides; many others wish to make cyanides, ammonia, etc., in electric furnaces.

The Readman-Parker *Phosphorus* production is said to prosper in England and in Russia; there is no lack of rival processes, and success is doubtful.

Acheson is reported to have made arrangements for *Carborundum* works at Dresden, which are to take their 400 h. p. from the municipal electricity works with primary steam power. England is to be supplied from Niagara Falls. The Reichsanstalt at Charlottenburg has found the small hexagonal carborundum plates exceedingly convenient for graduation, superior to diamonds, which are apt to draw wedge-shaped or jagged lines.

The use of sodium carbides for *metallurgical refining* may deserve attention. Gaucharon thinks that sodium carbide is preferable in this respect to calcium carbide and that it offers the advantages of metallic sodium without the dangers accompanying the use of the metal. The carbon percentage of the steel, *e.g.*, is to be kept such that it reaches its desired figure only after the addition of the sodium carbide. The sodium is to bind oxygen and sulphur; the sulphide and sulphate formed rise to the top and act as a flux, as they render the slag more fusible.

The British Aluminum Co.'s works at Foyers Falls claim to produce 6,000 lb. of *Aluminum* daily with their 3,500 h. p., while Neuhausen with 4,000 h. p. is credited with a daily output of 5,000 lb. only. The newly opened works of the British Aluminum Co. at Greenock make the carbons for the aluminum reduction. At St. Michel, where the Minet process gave way to the Hall process, Minet is carrying on new experiments. In practice we must reckon 14 electric horse-power hours for the production of 1 lb. of Al.

The oxybromine solution for *Gold* extraction of the Cassel Gold Co. recalls the proposals of Wagner, 1875, Lossen, Molloy, Gaze and others. Some kind of lead anode and cathode for the electro-deposition of gold seems to be the rage. Cowper-Coles and Alfred James quarrel about aluminum electrodes. What C. A. Hering says on the Max Netto cyanide process in Spain (*Berg- und Hüttenmännische Zeitung*, October) may possibly date from last year. Netto extracts both silver and gold by cyanide, precipitates the silver by hydrochloric acid and the gold electrolytically; the presence of both HCl and HCy, it is said, reduces the resistance of the bath considerably, and not more than 20% of KCy are said to be lost. The CyCl also formed is useful; the lye is finally rendered alkaline again with caustic soda to restore the original cyanide solution of 0.2 to 0.6%. The electrolysis is interrupted before the last traces of gold are deposited; there would be no loss, as the gold remains in the lye. The process is recommended for ores containing zinc and lead, but not for copper ores. The experiments at Mazarron and Hien de la encina are described as very satisfactory. Witter and Zuschlag declare the process to be impossible.

In the Transvaal the Siemens & Halske process has so well answered for the tailings that it has been applied to the slimes also. In their case, vats 10 ft. in length, 5 ft. deep, divided into 12 compartments, each with a large number of lead and iron electrodes, are employed. The currents are weaker than in the case of the tailings, 0.04 against 0.06 ampère. In spite of these favorable results the Andreoli deposition, by means of lead peroxide anodes and iron cathodes, is also to be given a trial.

Another process which has been tested at the Rand is Landin's extraction by means of nascent chlorine or bromine in the presence of metals like manganese, which form more than one halogen compound. The chlorine is said to have been generated simply from chloride of lime and hydrochloric acid, with good success in the cases of both free milling and refractory arsenical and other ores. It is contemplated to employ electrolytic chlorine lyes. The liquid does not circulate; but a few days' standing is to extract 90 and even 95% of the gold. Experiments have also been conducted at Falun and Hamburg; in the latter place with alluvial sands and auriferous slags.

The grand success of electrolytic *Copper Refining* has often been pointed out in these pages. A good deal more than half of the copper produced in the United States is refined in this way, and the United States is far ahead of Europe in this respect, although its great refineries are not more than 10 years old. Copper refining is also the chief electrochemical industry in Russia, where it was commenced seven years ago with the Siemens & Halske plant at Kedabeg, in the Caucasus. Recently Rosenkranz has started new works at St. Petersburg. According to Rostin, Nikolajew in Nijni Novgorod refines and also employs an improved Marchese process, precipitating the last traces of copper in special tanks by iron electrodes and working the copper into oxide or sulphate. Nikolajew further supplies nickel, lead white, etc. The Benardos arc-welding and repairing has since 1888 been practiced in many works, among them being the shops of the Orlow-Witebsk and the Oural Railroads, where, as also at the government gun works at Perm, the Slawianow method of cooling steel ingots while the arc is playing upon their surface is in use or still under test.

Hasse's proposal to heat the anode mud of copper and zinc refineries to red glow in order to bind the sulphuric acid, present in sulphates or added, by the silver which can afterward be gained by leaching, recalls the old Ziervogel process, although Hasse protests against that suggestion.

F. Foerster is investigating the refining of *Nickel*. Why nickel deposits are inclined to peel is not settled. It does not appear to be due to oxygen, though electrolytic cobalt, whose deposition offers no difficulties, does contain oxygen. From hot neutral sulphate solutions good nickel deposits were obtained; but the percentage of iron and cobalt was hardly diminished, so that the nickel refining failed; carbon, silicon, and copper did not contaminate the redeposited nickel. Nickel chloride proved more troublesome to deal with; hot neutral solutions form basic chlorides; this can be avoided by adding hydrochloric acid, but then hydrogen will be generated, which interferes with the uniform deposition of the metal. To a certain extent these troubles have already been overcome in practice, but the electrolytic nickel is not quite pure.

Aschermann fuses chromium oxide and antimony sulphide. The crucible afterward contains under a crust of sulphides a crystalline mass of the two metals; the antimony can then be removed by oxidation or refusion. Aschermann thinks the addition of sulphides in general advisable in order to accelerate and facilitate metallurgical reactions. He would obtain ferro-manganese from pyrites and manganese dioxide, and ferrochrome, aluminum, etc., in similar ways. Thus we come back to the often-tried, unsuccessful reduction of aluminum with the help of sulphides.

There are a good many new methods of extracting *Zinc* from its ores, and the old processes appear open to improvements. At Newcastle, New South Wales, Broken Hill ores have been treated after Ashcroft, leached with ferric chloride and sulphate, the iron oxyhydrate removed by boiling, the solution, freed from silver by passing over zinc plates, electrolyzed first in the cathode chambers with zinc electrodes, and then in the anode compartments with electrodes of iron, and finally coal, in order to reoxidize the iron lye, but the results have been partly successful only, and the continuation of the process is doubtful. Dieffenbach, at Duisburg, extracts chlorinated zinkiferous pyrites from Siegen with zinc chloride; that plant is stated to pay. Dieffenbach has also proposed to combine the deposition of zinc from alkaline solutions and of alkali from sulphates by what Andreoli has called indirect electrolysis. There is a middle chamber, filled with alkali sulphate or chloride, and separated by two diaphragms from the two cathode compartments containing alkali zincate. A new Siemens & Halske process of extraction of the roasted ore by means of an acid sulphate of zinc solution is to be tried at Illawarra. Wooden partitions are to be used in the electrolyzing vats; they may be cheap enough in Australia to justify disregard of the objections which have been raised against wooden diaphragms in Europe.

For the *Alkali Industry*, Blackman has recommended anodes made of natural or artificial magnetic iron oxide or of ilmenite (iron titanium ore), and Höpfner such of bits of carbon cemented by asphalt, celluloid, etc., coated with graphite and screwed into or fixed on metallic backs, to be used either as double or as end electrodes. Blackman's anodes have stood the tests. Störmer has observed that the surface of a mercury cathode should be kept quiet, but that the mass underneath should be agitated; patents of Koch, Sinding-Larsen, etc., aim at similar objects.

According to Lorenz, electrochemists need not waste their time in trying to reduce the electromotive force necessary for the electrolysis of sodium chloride to the theoretical 1.95 volts. Repeating Le Blanc's experiments, he finds that it is impossible in practice to work with less than 2.23 volts, because a good deal of caustic alkali is at once liberated which hardly disturbs the scientific experiments with rapid current impulses.

In England the Castner-Kellner process seems to have the best chances. The chlorine is transformed into bleach, the caustic soda sold as such or reduced to sodium. The original Oldbury works have been manufacturing since March, 1897. Three other plants with 3,000 h. p. are in course of erection. The Niagara Electro-Chemical Co. and the new works of the Mathieson Co. at Niagara have also adopted the Castner-Kellner process. At St. Helens, the (English) Electro-Chemical Co. is reported to have given up its Richardson-Holland process. Official rejoinders speak of new machinery only, but it is also stated that the works confine themselves to electrolytic chlorine, while soda is being manufactured after the old Le Blanc process. Brown, Thompson & Co. are trying the Hargreaves-Bird method, and Vautin's method (fused lead amalgam) is or was on trial at Modane. *Electrolytic Chlorates* have been manufactured at

Vallorbes since 1891 on the Gall-Montlaur system; there are other works at St. Michel de Maurienne, at Chedde (Savoy, Corbin process, similar to Gall-Montlaur), at Mansboe in Sweden, and Niagara (Blumenberg). The Elektrochemischen Werke at Bitterfeld, which are completing their plant at Rheinfelden (large water power), have declared that they supply caustic potash, not chlorate. At Frankfurt-on-the-Main (Elektron Co.), and also at Bitterfeld, the electrolysis is said to commence with carbon anodes and to continue with platinum anodes in other vats. Rhodin's alkali cell claims superiority over other mercury cathode cells, because the mercury is not directly agitated. The cell consists of an iron cylinder heated from outside, whose hollow revolving shaft carries a kind of clay bell, dipping into the mercury. The inner space is fed with brine, the outer with water. The rotation and the action of stirrers urge the amalgam into the outer cell, from which the decomposed mercury flows back. The tension of 3.3 volts is nothing remarkable, considering that the electrolyte is kept boiling.

Luckow's method of preparing insoluble or little soluble compounds differs from the ordinary type of lead-white processes. He works with strongly diluted and dissociated solutions. Thus he prepares lead peroxide from a 1.5% solution of sodium sulphate and a little chlorate with lead electrodes and two volts. Chromates, phosphates, etc., are made in similar ways.

From the fluedust of pyrites furnaces F. Foerster isolates *Thallium* by boiling the dust in water, precipitating with sodium chloride, transforming the chloride into sulphate, and again precipitating it as chloride in order to get rid of arsenic. The chloride is finally evaporated with sulphuric acid, and the acid solution electrolyzed by currents of 3.5 volts and 1.5 ampères per sq. decm., with a platinum cathode on which the thallium deposits in fine crystals. The solution must be stirred.

Electrolytic Bleaching has undoubtedly proved a success, and at the Hallein works the chlorine of the ammonia soda process is utilized after Kellner and Siemens & Halske, and further ammonia is gained from electrolytic sodium amalgam and nitrates. But electrolytic disinfection nowhere appears to get over the experimental stage. At Bombay the electrolyzed sea water has not given encouraging results. Hewitt has advised further tests; but so far the experience has been as usual: a little chlorine is of little use, and an efficient supply of chlorine too expensive. Now *Ozone* is once more seriously suggested for the sterilization of potable water. By keeping his long electrode boxes cool and maintaining a brisk air circulation, E. Andreoli had gained 48 g. of ozone per electric horse-power hour, and quite recently as much as 100 g. His electrode boxes were provided with many long metallic points, 53,760 for 12 boxes; his Swinburne transformer gave up to 17,000 volts. Andreoli's new ozonizers mark a return to the simplest style of apparatus and do not require cooled electrodes. Otto, of Paris, has claimed some still more remarkable results which have exposed him and his method of determining the ozone by means of sulphuric acid and potassium iodide to bitter attacks. Otto observed that the ozone yield grew proportionately to the frequency of the alternating currents, (6,000 volts), because, he says, the ozonizing is confined to a certain portion of the current curve, which portion increases with higher frequency. Whether or not that be so, he has contributed something to our knowledge of the chemistry of ozone, and his vaniline process is a commercial success; iso-eugenol is dissolved in acetic acid and treated with ozone for 24 hours.

Others have also been successful in preparing chemicals with the help of ozone, drying and thickening oils, bleaching wax, disinfecting foul beer casks (stinkers), which are a great nuisance, and there would certainly be a wide field for commercial ozone, supplied at reasonable cost. A water-ozonizing apparatus of Tindal was exhibited at Brussels. It worked in connection with transformers yielding currents of 33,000 and even 100,000 volts. The ozonized air circulated through the water or met a water spray. Large installations on the Tindal plan are being built at St. Maur and at Blankenberghe. Particulars of any value have as yet not been obtainable.

For the electrolytic endosmose of tanners' lyes and bark extracts in general, Cerych recommends the indirect electrolysis as explained above. The electrolytic manufacture of iodoform, first adopted by Schering's Chemical Works, has recently been investigated by Elbs and Herz, and by Foerster and Meves. The solution of potassium chloride in alcohol and water must be alkaline, but must not contain free alkali; carbonic acid or soda should, therefore, be introduced. The electrolytical treatment of molasses after Schollmeyer and Huber has been found economical at Stepanowka and Waronowitza, provided that the molasses are admixed with 0.25% of CaO.

An article in the *Electricien*, Paris, on the aging of wines at Tournus by the Broyer-Petit process, reads very much as if an old proof of some years ago had accidentally been rejunevated. That installation did not attain a high age.

Erdmann has put the telephone to use in *Chemical Analysis*, and Salomon suggests to make the rest current of polarized electrodes serviceable for titration. The practice is far simpler than the theory of the rest current. If we wish to titrate silver nitrate, we insert two silver electrodes into a beaker filled with a centinormal solution of potassium chloride. The silver solution is added drop by drop. Since the precipitated AgCl is slightly soluble in KCl, a galvanometer in circuit will indicate a weak current. But as soon as all the KCl is decomposed a fresh drop of $AgNO_3$ will at once cause the galvanometer needle to jump.

Wehrlin has devised an electrolytic cell which has rendered good service in the Zürich laboratories. It is a cylindrical vessel which can easily be taken to pieces, made of glass, the end electrodes resting on mirror plates, from which they are insulated, fixed in wood. Diaphragms can be inserted, and the reactions watched and controlled. Wislicenus and Kaufmann have pointed out the advantages of aluminum amalgam for organic reductions. H. W. Wiley and K. McElroy observed, however, that this amalgam decomposed alcohol and petroleum ether, but they found it useful for reducing platinum chloride waste.

CHROME ORE.

The chrome ore industry in California, which for many years has been the only domestic source of supply, became practically defunct in 1897. The San Luis Chrome Co. went out of business, and the Tehama County deposit is worked out. Howe & Jones of Hazel Creek, Shasta County, turned out a small amount of low-grade ore, but none was shipped, nor were there any shipments from the State to the Atlantic coast. The total production of the State is estimated at 50 tons, and many fear that the industry has no future.

PRODUCTION, IMPORTS, AND CONSUMPTION OF CHROME ORE IN THE UNITED STATES.

(In tons of 2240 lbs.)

Year.	Production.			Imports.			Consumption.	
	Quantity.	Value Per Ton.	Value.	Quantity.	Value Per Ton.	Value.	Quantity.	Value.
1893..........	1,629	$9.84	$16,000	6,354	$9.23	$58,629	7,983	$74,629
1894..........	3,285	12.14	39,980	3,886	9.87	38,364	7,171	78,344
1895..........	1,553	10.81	16,795	5,230	15.84	82,845	6,783	99,640
1896..........	702	11.07	7,775	8,869	21.13	187,400	9,571	195,175
1897..........	50	11.00	550	11,566	16.11	186,313	11,616	186,863

PRODUCTION OF CHROME ORE IN CALIFORNIA. (*a*)

Year.	San Luis Obispo.		Shasta.		Tehama.		Other Counties.		Total.	
	Tons.	Value.	Tons.	Value.	Tons.	Value.	Tons.	Value.	Tons.	Value.
1894......	*b*800	$10,500	1,200	$16,800	1,680	$12,680	....	....	3,680	$39,980
1895......	700	6,650	90	1,120	950	9,025	....	....	1,740	16,795
1896......	200	2,000	*Nil.*	....	56	475	530	$5,300	786	7,775

(*a*) From *Report of California State Mineralogist.* (*b*) Concentrates.

The subject of chrome ore, its occurrence and utilization, has been described fully in previous volumes of The Mineral Industry, especially in Vols. II. and IV. In Vol. II. the occurrence of chrome ore and methods of mining in the United States and other parts of the world were described specifically, while in Vol. IV. there were very complete papers on the analysis of chrome ores, and on the manufacture of chromates. The world's production of chrome ore since 1890 is given in the following table:

THE WORLD'S PRODUCTION OF CHROME ORE. (IN METRIC TONS.)

Year.	Bosnia.	Canada.	Greece.	New Caledonia	New-foundland.	New South Wales.	Norway.	Russia.	Turkey.	United States.
1892......	1,296	*Nil.*	1,470	500	*Nil.*	*Nil.*	*Nil.*	3,007	About	1,676
1893......	965	*Nil.*	1,890	242	*Nil.*	*Nil.*	*Nil.*	14,585	20,000	1,646
1894......	1,808	907	6,000	1,042	*Nil.*	3,083	*Nil.*	7,537	Tons	2,697
1895......	707	2,882	2,740	8,014	*Nil.*	4,297	190	....	Per	1,578
1896......	443	2,124	1,600	16,018	200	3,914	....	....	Annum.	718

The consumption of chrome ore in the United States in 1897 was divided as formerly between the manufacture of chromic salts and for use as furnace lining. In the manufacture of chromic salts there has been no novelty. The Kalion Chemical Co. of Philadelphia and the Baltimore Chrome Works of Baltimore are the principal producers of these chemicals, though a small amount is made at Boston and at New York. The principal supply of ore is drawn from Asia Minor. The price of these products does not undergo any material change. During 1897 potassium bichromate sold in New York at 10½c. per lb., and sodium bichromate at 8½c., which was practically the same as in 1896.

A company of Genoese capitalists was formed to erect works for the manufacture of chrome salts at Cogoleto, near Savona, in Italy. The new company acquired possession of a very favorably situated mine of chrome ore on the Dardanelles, and owing to its advantageous situation it is expected that chrome salts can be produced in Italy more cheaply than they can be imported from England.

Metallic Chromium.—A new method for the production of metallic chromium, patented by Aschermann,* was described in the *Zeitschrift für Elektrochemie,* of October, 1897. According to this method chromium oxide and sulphide of antimony in the proportion 10 : 23 are smelted in a graphite crucible in a gas-tight electric furnace constructed of cast steel. A mixture of chromium oxide and pure antimony in the proportion 10 : 10 : 23 may also be employed, but in the latter case the yield of chromium is not so large as in the former, and the graphite crucible suffers. The furnace having been sealed the electric current is passed through it. A moderately weak current, say 20 to 25 ampères, is sufficient to fuse the charge and bring about the reaction, which takes place with great development of heat. After it is completed a deposit of antimony oxide, antimony sulphide, and traces of chromium oxide are found in the upper part of the furnace. In the crucible there is a fused mass of metallic chromium combined with the excess of antimony, the whole having a plainly crystalline structure. By repeated resmeltings in the electric furnace all traces of antimony can be driven off, but this method is too complicated and costly, and it is far more simple and cheaper to break up the first product and heat it over an open fire, whereby at white heat the antimony is volatilized and metallic chromium remains. Molten chromium has the property of dissolving considerable quantities of carbon, which upon cooling separates out in the form of graphite. Chromium itself volatilizes at a temperature of 2000° C.

---

* D. R. P. No. 93,744, June 30, 1896.

M. Henri Moissan has also demonstrated the possibility of manufacturing pure chromium and tungsten in commercial quantities. His latest method is to take a carbon pipe filled with the metallic oxide mixed with carbon, inclining it, and subjecting it to the electric current; the metal, contaminated with carbon, readily flows off as a result of the reaction. Two carbides of chromium have been identified: one of these, C_2Cr_3, was obtained by employing 350 ampères with 70 volts. The chromium carbides are purified by remelting with lime.

Metallic chromium is now produced regularly for the market by the Elektrochemischen Werke, Bitterfeld, of Germany.

Most of the metallic chromium that is employed at the present time is in the form of ferro-chromium, the preparation of which is not difficult. Several grades of this alloy are regularly on the market. George G. Blackwell, Sons & Co., report to us the following analyses of commercial ferro-chromium: (1) A lot of 30 tons: chromium 64.05%; iron, 25.449%; carbon, 8.55%; silicon, 1.88%; manganese, trace; phosphorus, 0.025%; sulphur, 0.046%; (2) a lot of 40 tons analyzed by Dr. George Tate gave: chromium, 63.6%; iron, 24.195%; carbon, 9.833%; silicon, 1.5%; manganese, 0.21%6; phosphorus, 0.03%; sulphur, 0.005%; undetermined constituents and loss in analysis, 0.621%. There is also now on the market a high-grade ferro-chromium assaying from 96 to 98% chromium, 2 to 3% iron, 0.75 to 1.25% carbon, and 0.05 to 0.75% silicon. These ferro-chromiums are employed in the manufacture of chromium steel. Similarly a chrome-nickel alloy, containing about 75% chromium and 25% nickel, is now offered for the manufacture of nickel-chrome steel.

Analysis of Chrome Ore.—A. G. McKenna, in the *Proceedings of the Engineers' Society of Western Pennsylvania*, Chemical Section, 63, describes the following method: The dried sample is fused in a nickel crucible with an excess of sodium peroxide for a few minutes. This insures complete decomposition of the ore, after which the sodium chromate formed is dissolved and determined volumetrically with a standard solution of a ferrous salt. The other constituents of the ore are separated and determined by the usual quantitative methods. A nickel crucible is used because platinum is easily attacked by sodium peroxide.

A. Clouet, in *L'Industrie*, reported the following analyses of chrome iron ores from various parts of the world:

	Norway (Christiania)	France (Var).	Hungary.	Russia (Ekaterinbourg).	Russia (Orenbourg).	Asia Minor (Karahissar).	Norway (Drontheim).	Styria	Russia (Viatka)	Hungary Alt-Orsowa (Banat)	India.	California	Shetland Islands.	
	Per Ct.	Per Ct.	PerCt	Per Ct.	Per Ct.	Per Ct.	Per Ct.	Per Ct	Per Ct.	Per Ct.	PerCt	Per Ct	PerCt	PerCt
SiO_2....	4.20	2.53	7.30	7.07	3.05	2.15	5.00	2.50	2.20	5.26	1.50	5.48	6.10	8.85
Al_2O_3..	4.80	13.15	16.77	6.77	8.05	7.62	12.00	8.00	10.00	12.60	9.30	13.60	7.47	10.15
MgO...	13.23	12.53	14.85	13.40	10.98	12.31	21.28	11.58	11.62	15.09	6.00	14.88	17.30	16.86
FeO....	37.77	34.79	29.60	23.27	24.92	24.92	19.72	24.92	18.18	18.33	35.70	23.84	24.93	23.14
Cr_2O_3..	40.00	37.00	31.48	49.49	53.00	53.00	42.00	53.00	58.00	48.72	47.50	42.20	44.20	41.00

CHROME ORE MINING IN QUEBEC.

BY J. OBALSKI.

REFERENCE was made to the occurrence of this mineral in THE MINERAL INDUSTRY, Vols. IV. and V., which it is unnecessary to repeat here, the following remarks having a more especial bearing on the work done in 1897.

The Coleraine district deposits were operated in the usual primitive manner, no steam rock drilling or concentrating process as yet being used in any of the mines. The bulk of the work thus done took place in the vicinity of Black Lake, and a total of 2,340 long tons were shipped, of which only a small percentage was low-grade ore; the average price obtained, as near as can be ascertained, was $14 per ton f. o. b., and about 50 men were employed during the summer season.

The actual production in 1897 was greater than the quantity above stated, as there was on hand at the end of the year somewhere in the vicinity of 2,000 tons; the total shipments since 1894, when the mines were first worked, make a total of 8,066 tons.

Some new deposits were located in 1897 and some may turn out to be important. In the serpentine belt in Bolton township, near Lake Memphremagog, a new find was made and 27 tons extracted and shipped.

Last summer I made an exploration in the Gaspé district, at Mount Albert, where there is a large serpentine formation, but I found no very encouraging indications of chrome ore. I saw some small pieces, and located a few veins, but they were very narrow, and consequently of no importance when the difficulty of access to this region is taken into consideration.

With a view to testing our Canadian product in this line, several assays were made by the E. P. Allis Co. of Milwaukee on the Castelnau table basis; in each case a low-grade ore was submitted to the concentrating process, and following are the results:

Raw Material—Per Cent. Cr_2O_3.			Concentrates—Per Cent. Cr_2O_3.		
40.16 40.64 34.88	39.58 42.66 28.68	38.34 37.24 40.76	51.12 42.94 49.42	43.80 42.01 45.70	43.90 56.28 60.66

The tests were made on a quantity of one ton, or a little more, and all but two lots gave good results. The poor showing made by the two lots in point cannot be satisfactorily accounted for, as tests made with smaller quantities turned out very differently.

From the observations I have made since the beginning of this industry I conclude that it is quite practicable to concentrate the Canadian ore with commercial advantage and profit.

I anticipate a bright future for the chrome industry, because the shipping facilities are very good, the deposits so far as known are not more than seven miles from railway, and labor is obtainable at reasonable rates, while the necessary fuel and water are easily accessible at small expense all over the ore-bearing district.

NEWFOUNDLAND.

THE chromite deposits of Newfoundland were described by George W. Maynard, at the Chicago Meeting of the American Institute of Mining Engineers, February, 1897.

The deposits are located at Bluff-Head, Port au Port Bay, on the west coast of Newfoundland, in north latitude 48° 45′, 30 miles from Sandy Point, on Bay St. George, which is reached by steamer from Halifax and North Sidney, Cape Breton. Bay St. George is separated from Port au Port Bay by a narrow neck of land, called "The Gravels," about 1,000 ft. in width. The distance from Sandy Point across Bay St. George is 15 miles, and from the Gravels across Port au Port Bay to Bluff-Head an additional 15 miles.

Bluff-Head is a bold headland of diorite, which rises vertically from the shore about 2,000 ft. The country rock is diorite, traversed by frequent and broad belts of serpentine, of the dark-green variety, at times almost black. The chromite, as in all other known deposits, is confined to the serpentine rocks, and the entire area in which the mineral has been discovered so far is controlled by the Halifax Chrome Co.

Seven exposures, ranging from 2 to 8 ft. in width, were originally identified and sampled, but the work of the summer of 1896 showed that what appeared at an intermediate point to be three separate bodies were really the outcrops of one body. The analysis of samples from the different exposures gave a range of 39 to 50% Cr_2O_3. The work of the summer of 1896 was confined to the stripping of the surface at the point where the outcrop measured 8 ft. in width. After a relatively small amount of work, an exposure 97 ft. in length, with a vertical face of 44 ft. at the top by 46 ft. on the bottom of the cutting was made. The ore breaks out in large angular masses, the partings between the masses being thin bands of serpentine.

Blocks of serpentine act as "headers" to the masses of chromite, but are readily separated by the blow of a sledge. In the blocks of massive chromite there are no intrusions of serpentine other than the small granular particles which are pretty regularly distributed through the mass of chromite, and which will have to be removed by dressing in order to produce a marketable product of high grade.

In addition to the stripping already referred to, openings of a more limited extent were made on outcrops higher up the mountain, all of which bid fair to develop extensive bodies of ore.

About 1,500 tons were mined from the open cut, of which only 200 tons were shipped in 1896; and 278 tons in addition were carted to the shore. Although the sorting was done by men who had had no previous experience, a cargo of 145 gross tons shipped to Philadelphia, and there sampled and analyzed by Booth, Garrett & Blair, contained: Chromic oxide, 49.90%; silica, 6.99%. This ore was sent to Pittsburg, and was used in the manufacture of chrome brick for basic furnaces. A complete analysis of a selected lump gave the following result: Cr_2O_3, 49.23%; FeO, 17.21%; MgO, 18.66%; Al_2O_3, 7.50%; SiO_2, 6.51%; lime, vanadium, copper, and manganese, traces—total, 99.11%. This and succeeding analyses were made by Dr. Elwyn Waller.

In the preliminary examination six well-defined exposures, lying one above the other, within a distance of 120 ft., measured on the surface, were sampled. Beginning at the exposure furthest up the mountain, the results were as follows: No.1, 2 ft. wide, 40.28% Cr_2O_3; No 4, 8 ft. wide, 50.21% Cr_2O_3; No. 5, upper, 3 ft. wide, 45.08% Cr_2O_3; No. 5, lower, 3 ft. wide, 39.03% Cr_2O_3; No. 6, 4 to 5 ft. wide, 48.92% Cr_2O_3; No. 7, 3 ft. wide, 47.83% Cr_2O_3.

The market standard of chrome ore is 50% Cr_2O_3. For every unit above 50, from 75c. to $1 extra is paid; but below 50 the deduction per unit is much greater. Low silica also enhances the value.

By close sorting and cobbing an effort is made to put a high grade of ore into the market, but the result is necessarily irregular. It is manifestly important, not only to raise the grade, but also to secure regularity of product; and this result can only be secured by a regularly organized dressing system. A test on 2,237 kg. of this ore, made by Prof. R. H. Richards, gave 75.54% of concentrates assaying 55.30% Cr_2O_3 and 24.45% of tailings assaying less than 25% Cr_2O_3.

There were no shipments from Newfoundland in 1897, although the mines were operated and considerable ore was carted to the shore, where there are now about 2,300 short tons, of which one-half will assay 49 to 50% Cr_2O_3, and the remainder 35 to 40%. The company undertook to provide shipping facilities, but was prevented by the officers of French and British cruisers visiting the scene, on the ground that the erection of structures on the west coast of Newfoundland was forbidden by the treaty of Utrecht. The future course of the company in this respect is uncertain.

NEW SOUTH WALES.

According to a recent report by Wm. Adams, Jr., the Helena mine, at Gobarralong, eight miles east of Colac, and 18 miles northeast of Gundagai, has in sight 20,000 tons of ore, which will average 50% Cr_2O_3. Since 1893 the production of chrome ore in New South Wales has been acquiring considerable importance.

NEW ZEALAND.

Chrome occurs in New Zealand chiefly in association with the magnesian rocks of the Dun Mountain mineral belt, in the Nelson district. With rocks of the same age and character it also occurs in northwest Otago and the southern part of Westland. In each locality the formation is of Devonian age. In the Nelson district chrome ore has been traced from D'Urville Island, in the north, to the gorge of the Wairoa River. The chief developments of ore are found between the Upper Maitai Valley and the Lea River, a distance of 12 miles. The ore occurs in elliptical masses, some of which are of considerable size. The ore exported from Nelson has been mainly from one outcrop near Dun Mountain, supplemented by a lesser quantity from Little Ben Nevis. Over this part the whole of the outcrops of value are held under lease, or the rights to mine have been otherwise acquired. The region lying between the Upper Wairoa and Tophouse, known as the Red Hills, is composed, over a length of seven miles and a breadth of three miles, of olivine and serpentine rocks. This has not been explored or prospected, yet it is considered by the Government Geologist, Mr.

A. McKay, to be a promising field for the occurrence of chrome or copper minerals. The Dun Mountain mineral belt south of the Maiti Valley, where the chief mineral belt lies, is rugged, mountainous country, and the position and amount of ore in each particular outcrop has to be considered carefully in relation to the cost of road-making and carriage to Nelson. From the Red Hill area the distance is 15 miles to the railway at Moteuka Crossing; to Blenheim the distance is more than 40 miles. In the southern area, extending from the neighborhood of Jackson's Bay along the Chrome and Red Mountain Ranges, and the mountains to the south as far as the source of the Greenstone River, there is a likelihood of the occurrence of chrome ore in quantity, but the character of the country is very rugged, and great cost in road-making would have to be incurred to bring to the seaboard any ores that might be found.

TURKEY.

The chrome ore deposits in the Villayet of Aidin, Asia Minor, which are important sources of this mineral, were described by W. F. A. Thomae, in a paper read at the Atlantic City meeting of the American Institute of Mining Engineers, February, 1898, of which the following is an abstract:

The Villayet of Aidin is a province in Asia Minor which has a coast line extending from opposite the island of Mytiline to beyond Makri, opposite the island of Rhodes, and embraces almost the entire basins of the two principal rivers, the Sarabat (Hermus) and the Mender (Mæander), besides some smaller ones. The principal town is Smyrna, the center of trade of the district, from which two railways run into the interior along the valleys of the two rivers just mentioned.

By far the greater part of this country is composed of limestones and schists, and presents a fine example of orthodox regional metamorphism. The shell, mud and other beds, originally deposited over a sea-bottom, extending probably far beyond the region here described, have been completely metamorphosed, the limestone to pure white saccharoid marble, now covering large areas, and the other beds, interstratified with it, to schists of various kinds—mica, chloritic and hydro-mica, often changing gradually the one into the other, and sometimes passing insensibly into gneiss. In several localities the schists contain regular octahedra of magnetite up to half an inch in diameter. In one place on the coast, a little below the island of Scios, pure red clay-slates occur, carrying thin beds of pyrolusite.

The general strike of these formations throughout the country is about east and west, though locally the schists are much folded, and strike and dip in all directions. The average dip is steep but not uniform, and is not always apparent. South of Aidin it is generally south, while north of Aidin it appears to be to the north. Further north again, at Odemish, the dip is south, indicating several parallel foldings of the strata, the number and extent of which observations were not sufficient to determine.

In several places serpentine belts occur. These appear to be interstratified with the marbles and schists, and would thus point to a result of the general metamorphosis on original possibly glauconitic deposits; but further investigation is necessary before it can be definitely asserted that they are not alteration products of intrusive sheets of basic olivine rocks. Round the bay of Smyrna extensive areas consist of volcanic lavas and tuffs, chiefly trachyte. Overlying the metamorphosed formations there are found in places, such as between Suladan and Ala Shehr, and south of Chesmé on the coast, undisturbed beds of sandstone and soft, chalky limestone, lying flat or dipping at a very slight angle, and full of fossil shells, chiefly gasteropods.

Chrome ore was also first discovered in 1848 by Dr. J. Lawrence Smith, near Broussa, in the province north of Aidin. It occurs here, as elsewhere, exclusively in the serpentine, in the shape of pockets and veins of irregular extent and size. In the district under notice its exploitation is practically a monopoly in the hands of Messrs. Patterson, whose mines are in the neighborhood of Makri.

The value of the ore depends on its contents of sesquioxide of chromium. Shipments have been made from Makri containing as much as 58%. The lowest content marketable is 47%, and this only if the ore is soft and easily crushed. Such ore has always been preferred to the very hard ore, which latter must contain at least 50% to be marketable. At present 50% ore fetches £3 12s. per ton f. o. b. on the coast; 52%, £3 14s., and so on. In the early days of the industry good ore was worth about $12 per ton.

It is a curious fact, of which Mr. Patterson has assured me, that the best ore is got near the surface, and that in depth it invariably becomes poorer. The concentration of low-grade chrome ore will be a problem that will have to be faced in the future, when the rich deposits become exhausted, and attention might with advantage be directed to it now.

When the industry was at its height over 30,000 tons of chrome ore were exported per annum from Makri alone.

CLAY.

THE manufacture of brick and other clay products is one of the most important branches of the mineral industry in the United States, the aggregate value of the output in 1897 being surpassed only by that of coal and iron. This is not surprising when it is considered that brick is the most important element in all our permanent construction, and its use is increasing not only through the natural extension of building, but also through the replacement of old wooden work with material of greater solidity and durability.

A statistical investigation of the brick and clay industry is burdened with difficulties which are not easily overcome. The number of producers is very large, our list comprising about 8,000 names, scattered through every State and Territory of the Union. Most of them are individuals, who operate on a small scale and in many cases irregularly. The ease with which a clay-bed can be opened and a brickyard established, together with the small outlay of principal required, which makes the abandonment of a yard a matter of little consideration, combine to give this industry a transitory character and add to the labors of the statistician. The difficulty is increased, moreover, by the fact that some of the producers do not keep records of their work, and consequently are unable to make accurate reports.

In this investigation we have aimed so far as possible to obtain results which will be of the greatest industrial value. After the production of coal and iron there is probably no better indication of the industrial condition of the country than is afforded by the statistics of the production of brick and clay products, since it is well known that when times are prosperous there is much building and vice versa. The results of this investigation are embodied in the large table showing the production of brick and clay products by States, which is presented herewith. The grand total of the value of the brick and other clay products of the United States in 1897, as shown in this table, is $56,121,101.

In this table the column "common brick" includes only the ordinary red brick that is used generally in building. Under "front brick" we have grouped pressed brick of all colors. Under "firebrick," however, only what is properly termed alumina brick has been included, such silica brick as Dinas brick, which is also properly called "firebrick" or "refractory brick" being omitted, because it is not a clay product. "Other clay material" includes fancy or ornamental and enameled brick, roofing tile, terra cotta, terra cotta lumber, floor tile, hollow

PRODUCTION OF CLAY AND CLAY PRODUCTS IN THE UNITED STATES IN 1897.

State.	Building Brick, Common.		Building Brick, Front.		Fire Brick, Alumina.		Paving Brick.		Other Clay Building Material.
	Quantity.	Value.	Quantity.	Value.	Quantity.	Value.	Quantity.	Value.	Value.
	M.		*M.*		*M.*		*M.*		
Alabama	45,000	$236,250			4,000	$80,000	2,000	$20,000	
Arizona	3,867	21,733	200	$2,533					
Arkansas	8,473	50,671	42	337			2,765	27,650	
California	97,468	571,240			5,000	10,000	100	1,100	
Colorado	7,671	54,339	3,585	37,030	818	16,854	58	871	
Connecticut	116,003	596,628	2,625	21,004	3,500	70,000			$29,018
Delaware	454	3,686	192	9,583			888	11,021	
Dist. of Columbia	50,044	289,787	16,463	183,825			1,800	10,400	
Florida	22,821	128,464							
Georgia	94,814	423,211	4,479	51,233	1,933	29,000	902	20,880	38,667
Idaho	1,001	6,579							
Illinois	925,635	1,983,986	34,735	374,169	8,266	82,745	182,618	1,472,980	169,919
Indiana	157,225	719,474	11,243	109,476	809	8,136	39,277	212,660	28,337
Iowa	117,881	594,271	9,899	71,301	239	4,630	49,762	358,848	
Kansas	38,085	230,679	1,952	10,241	100	1,000			8,000
Kentucky	37,085	191,745	889	8,570	15,008	187,087	380	3,800	468
Louisiana	78,704	358,482	8,000	56,000			1,000	5,000	
Maine	61,414	383,986	1,897	16,414					
Maryland	94,644	542,680	6,084	114,431	19,772	296,708	6,597	49,741	36,636
Massachusetts	250,952	1,300,478	5,839	91,598	2,022	77,667			14,767
Michigan	99,250	496,250					3,500	35,000	
Minnesota	80,000	360,000							
Mississippi	27,822	149,771	462	4,616	839	8,398			
Missouri	171,702	844,855	7,776	61,140	27,836	362,602	31,579	286,188	22,105
Montana	16,115	91,760	1,711	28,228	1,675	36,916			
Nebraska	51,501	331,904	899	7,050			1,818	9,743	
New Hampshire	78,197	441,924	1,108	5,888	792	7,917	950	6,650	
New Jersey	283,678	1,260,342	26,979	519,077	18,327	256,652	575	7,600	2,718,600
New Mexico	250	2,500							
New York	862,732	3,397,305	10,384	284,191	18,078	360,958	19,849	209,124	342,278
North Carolina	55,761	285,428	848	7,946			1,746	18,996	2,754
North Dakota	550	3,300							
Ohio	236,230	1,306,124	62,662	760,216	56,908	762,838	97,225	735,764	430,431
Oklahoma	1,408	9,500							
Oregon	8,586	51,991	519	11,000	71	1,788			
Pennsylvania	468,267	2,936,090	96,086	1,151,246	104,032	1,741,862	104,509	865,895	83,609
Rhode Island	28,000	175,000					4,000	48,000	
South Carolina	24,094	112,094	688	5,625	1,250	4,125	625	4,375	
South Dakota	1,440	11,525	80	1,600					
Tennessee	64,829	349,942	1,837	17,114	18	184	9,438	84,815	379
Texas	74,409	451,916	2,668	29,289	499	7,175	69	691	
Utah	12,040	71,250	3,087	28,442					
Vermont	9,742	50,518							
Virginia	45,744	281,282	2,160	17,518	148	1,993	1,401	10,842	1,624
Washington	5,501	39,780	168	2,117	83		3,000	30,000	
West Virginia	28,870	127,852	1,825	18,252	1,141	15,970	14,422	108,588	3,239
Wisconsin	84,587	388,942	6,740	55,883					
Wyoming	500	4,500							
Not distributed									
Totals	5,010,495	$22,747,018	336,761	$4,172,668	293,589	$3,733,148	581,333	$4,655,617	$3,930,846

building blocks, etc. All the clay material other than brick which is now used so extensively in the construction of fireproof buildings is included under this classification.

The distinction between common and front brick is sufficiently sharp, since there is always a wide gap between their values per thousand. Between front brick and firebrick, however, there is no sharp dividing line, because there is now a good deal of pressed brick made of fire-clay and used in the construction of houses which is manufactured by concerns making brick for furnace construction, etc., out of the same clay.

In the manufacture of common brick, New York, Pennsylvania, Illinois, Ohio, Massachusetts, and New Jersey, in this order, take the lead, these States furnishing 53.6% of the total in 1897. As might be expected, these States lead also in the production of front brick and other clay building material. In the manufacture of firebrick Pennsylvania occupies the first place, contributing upward of 50% of the total output. Pennsylvania not only has great resources of excellent

PRODUCTION OF CLAY AND CLAY PRODUCTS IN THE UNITED STATES IN 1897.—*Continued.*

States.	Sewer Pipe and Drain Tile.	Stoneware.		Miscellaneous Clay Manufactures.		Crude Clay. (*a*)		China Clay, or Kaolin.	
	Value.	Quantity.	Value.	Quantity.	Value.	Quantity.	Value.	Quantity.	Value.
		Gals.				*Tons.*		*Tons.*	
Alabama									
Arizona									
Arkansas									
California									
Colorado	$240				$40,000	1,019	$3,608	400	$1,000
Connecticut	1,882								
Delaware								24,468	200,725
Dist. of Columbia	6,500								
Florida								8,571	85,710
Georgia	80,983	128,889	$7,089		15,467				
Idaho									
Illinois	927,434	14,701,180	299,274		404	39,911	39,911		
Indiana	256,427	569,898	20,084		3,146				
Iowa					462,832				
Kansas									
Kentucky	144,985	8,769	438		40,704	146,191	146,410		
Louisiana	400								
Maine									
Maryland	2,085	1,491	149		15,058	878	714		
Massachusetts		255,764	84,390		280,424	1,491	1,491	134	1,340
Michigan									
Minnesota									
Mississippi									
Missouri	656,763	3,092,969	116,806		361,088	41,846	41,179	558	5,580
Montana	3,600					2,933	5,867		
Nebraska	691								
New Hampshire					950				
New Jersey					91,350	940,236	1,410,854		
New Mexico									
New York	18,971	184,000	17,588		125,625	4,355	8,710		
North Carolina	53,238					2	40	6,888	68,990
North Dakota									
Ohio	7,411,464	9,465,948	679,944		966,097	78,531	463,888	3,115	31,459
Oklahoma									
Oregon	18,952	185,714	9,286			600	1,800		
Pennsylvania	463,569				402,051	1,989	1,989	3,378	8,295
Rhode Island									
South Carolina					3,000			37,500	150,000
South Dakota					571				
Tennessee	45,882	1,085,882	65,765			17	248		
Texas	13,600	67,122	5,034						
Utah									
Vermont								1,648	11,500
Virginia									
Washington									
West Virginia		65,185	3,259			408	612		
Wisconsin	25,208								
Wyoming									
Not distributed						132,218	150,287		
Totals	$10,072,274	89,762,806	$1,259,056		$2,708,767	1,392,625	$2,277,108	86,655	$564,599

(*a*) Includes ball and slip clay, fire-clay used for the manufacture of glass pots, zinc retorts, gas retorts, glass pots, clay burned for railway ballast, clay used for laying firebrick, and crude clay employed for all other purposes.

refractory material in connection with its coal measures, but it is also the greatest metallurgical State. Ohio produces a little more than half as much firebrick as Pennsylvania.

In collecting the statistics of the production of clay used for other purposes than brick it is not easy to proceed uniformly. The articles manufactured are of such various character that figures of quantity expressed in numbers have little significance, and as in the case of brick manufacture few of the producers are able to specify the amount of raw material consumed. We are, therefore, for the most part limited to statistics of the value of the product in which a varying percentage of labor is involved. The classification, "drain tile and sewer pipe," "stoneware" and "paving brick" are intelligible without further explanation. Under the caption "miscellaneous" are included such articles as flower pots, earthenware, crucibles and assay supplies, tobacco pipes, etc., etc.

We have avoided the inclusion of the statistics of pottery production other than stoneware and common earthenware, since any attempt to pursue the investigation further in this direction is bound to lead not only to confusion and duplication of reports, but also to results which would be invalidated for purposes of comparison by the variable amount of labor, interest on principal, etc., that is involved in the manufacture of porcelain and fine chinaware. The manufacturers of these articles consume a large amount of ball and slip clay and china clay of domestic production, together with a considerable amount of flint and feldspar; but besides these they employ large quantities of china clay, flint, feldspar, St. Austell stone, etc., imported from Europe, and adding statistics of the aggregate value of the finished products of the potteries to statistics of brick, etc., of domestic production, and referring to the total as the clay production of the United States, is obviously erroneous. Since it is impossible to separate from the value of the pottery production the value of the imported material used therein, and also to obviate the misleading variability of the labor and capital component we have based our statistics of the clay used in pottery, and for certain other purposes where there were similar difficulties, upon the raw material.

Thus our statistics of china clay, which is used for a variety of purposes, difficult to trace, have been based on the crude marketable product. The china clay used in pottery is generally washed kaolin, but in North and South Carolina there are some deposits which are sufficiently pure to find a market without preliminary preparation, notwithstanding that the color is not pure white. China clay is consumed chiefly in the manufacture of porcelain and chinaware and in paper making. There is a large production in South Carolina and North Carolina which is used for the latter purpose.

Under the caption "crude clay" we have included all that which is used for the manufacture of glass pots, melting crucibles, zinc retorts, gas retorts, fireclay employed for laying firebrick and in metallurgical establishments, fire-clay used in paper making, "gumbo" burned for railway ballast, and ball and slip clay used in pottery. The quantity of clay employed in the pottery industry is, therefore, reckoned in this classification, and this is, we believe, a far more accurate method of showing the magnitude of the clay industry of the United States than by basing statistics on the value of such finished products as porcelain and chinaware. As previously explained, it is necessary to collect the statistics of the production of brick and rough building material, drain tile, sewer pipe and stoneware in terms of the article of first manufacture, but the amount of labor, etc., involved in these is more or less uniform.

As to the manufacture of silica firebrick we have reports of the production of 18,088,000, valued at $401,698, which were made chiefly in Ohio, Pennsylvania, and Indiana, although a considerable quantity was produced in Montana. The silica brick made in the last State is employed chiefly for lining the converters in the copper smelting works.

The average value of the common brick made in the United States in 1897 was only $4.54 per 1,000; front brick, $12.39; firebrick, $15.95, and paving brick $8. In each case these values were somewhat less than the averages in the previous year. The averages are calculated on the prices at the yards.

Clay Ballast—Its Methods of Manufacture and Cost.

By H. Foster Bain.

The use of burned clay as a ballast material in railway construction has in recent years been rapidly extending. In Missouri the business amounts to about $1,000,000 yearly. In Iowa the output is smaller but still important. Last year the Rock Island road used 75,000 yards at one place. This season 100,000 yards are being dug for the Burlington road in two pits, and a large amount of material burned about five years ago is being spread. The material is being investigated by many of the most progressive roads in the Middle West and is fast making friends among constructing engineers. It has been extensively used by the Chicago, Burlington & Quincy, Atkinson, Topeka & Santa Fe, Hannibal & St. Joseph, Wabash, Kansas City, St. Joseph & Council Bluffs, Chicago, Rock Island & Pacific, and other roads of the region. The Chicago, Burlington & Quincy has probably had the most experience with it, having begun its use about 11 years ago. The main line of that railway is ballasted with burned clay, and it is interesting to remember that it was over this road-bed that the record run of last April to Denver was made. Of the trunk lines crossing Iowa, the Milwaukee has a gravel track, the Northwestern a rock ballast, the Rock Island part gravel and part burned clay, and the Burlington a clay ballast. It is perhaps significant that the Burlington, with the long haul to Omaha, still carries the fast mail. The railway officials are well satisfied with clay ballast; so much so that they have been for some years spreading it along the various lines in Iowa and Missouri, and this year ballasted up a considerable section of the St. Joe division. A not unimportant factor in the increased use of the material is the decreased cost which has resulted from the introduction of machinery in its manufacture.

The material used in the production of clay ballast is derived from the surface formations. It is taken from beds which owe their origin indirectly to glacial agencies. At Clifton and other points in Missouri, and at Davis City, Iowa, the clay is obtained from river bottom land. It represents the river gumbo clay. At the latter place, at least, and probably also at several of the former, the clay was derived from the upland gumbo-loess deposit, and has simply been redeposited by river action. The Maxon and Brush pits, which will be more particularly described, as well as several in Missouri, are located upon the upland, and the material is taken from the ordinary upland loess which covers so large a portion of Indiana, Illinois, Missouri, and Iowa. This loess belongs to what is known as the older type or white clay phase. It is a white to drab pebbleless clay, with fine grain and great plasticity. An analysis of clay of this formation gave the following results: Hygroscopic water, 3.76%; combined water, 6.89%; silica, 63.31%; alumina, 16.51%; iron oxides, 4.06%; manganese oxide, 0.49%; lime, 1.11%; magnesia, 1.10%; soda, 2.20%; potash, 0.96%—total, 100.39%. In much of the clay the silica would perhaps be lower and the alumina higher.

The two prominent physical characteristics of the clay are its plasticity and high shrinkage. Wheeler* found the latter to vary from 9 to 12%. In burn-

---

* *Missouri Geological Survey*, Vol. X., p. 542.

ing for building brick at certain plants in Iowa the clay shrinks about 13% in bulk. According to Wheeler the tensile strength of the air-dried clay ranges from 270 to 410 lb. per sq. in. as against 100 to 200 lb. in ordinary clays. They have a low sp. gr., 1.98 to 2.05, and are very plastic when mixed with 22 to 25% water. It is the property of high shrinkage which makes the clay valuable for ballast, since in burning it the lumps crack open and allow the heat to penetrate. As a result the clay is thoroughly burned at relatively low heat and with corresponding economy. The shrinkage also causes the clay to "slack," breaking down into small pieces and forming a gravel-like aggregate. Indeed burned clay is essentially an artificial gravel.

A very essential factor is that the clay should be easily and cheaply worked. For this reason the loose surface clays, which can be handled with plow and shovel, and which are spread out over flat areas, are particularly valuable. They represent probably old water-laid beds, or possibly much altered wind deposits, and it is curious to note that the areas least valuable for agricultural purposes furnish the best clay for ballast burning. There is, however, a wide range of clays suitable for the latter purpose, and it seems probable that but little difficulty would be encountered in locating beds throughout the Mississippi Valley.

In general the process of manufacture consists of intimately mixing the plowed clay and coal slack and firing it in long ridges or outdoor kilns. Formerly this work was done by hand. Now it is almost entirely machine work. A modern plant will have a kiln or pit 3,000 to 5,000 ft. long. In preparing for the work the surface soil to a depth of 16 to 18 in. is scraped off, being usually hauled away to use in railway fills. If a trench is not already available one is dug along one side of the scraped area to a depth of 8 to 10 ft. This should be at the bottom nearly as broad as deep. Along the bottom two parallel rows of old cross ties placed longitudinally and about 3 ft. apart are laid two deep. The space between these is filled with kindling and over them is placed one layer of ties crosswise. A thin layer of dirt is spread over the top and the wood is set on fire. As the fire progresses clay mixed with coal-slack is thrown on it. Along the side of the trench is the track upon which the machines run. The work is carried forward as the burning progresses by the addition of clay and coal-slack along the track side until a ridge about 14 ft. high is built up. As the work goes on this ridge broadens, the machine tracks are moved sideways from it, and in the end there is a broad pile the full length of the track, with fresh clay on the machine side, fully burned ballast on the opposite, and the fire between and approaching the machines. A kiln is usually burned one year and loaded out the next; but ballast burned in the spring may be loaded in the fall.

In the work done by the Iowa Ballast and Improvement Co., two machines are used at each kiln. One of these machines is the ballast machine proper and the other is a pusher used in shifting cars, distributing coal, etc. The pusher consists essentially of a flat-car upon which is mounted a 17 h. p. engine geared to an axle by a link belt. This machine will haul three loaded cars from point to point along the face of the kilns. Such an outfit costs about $1,500 and will do nicely all the work for a 3,000-ft.

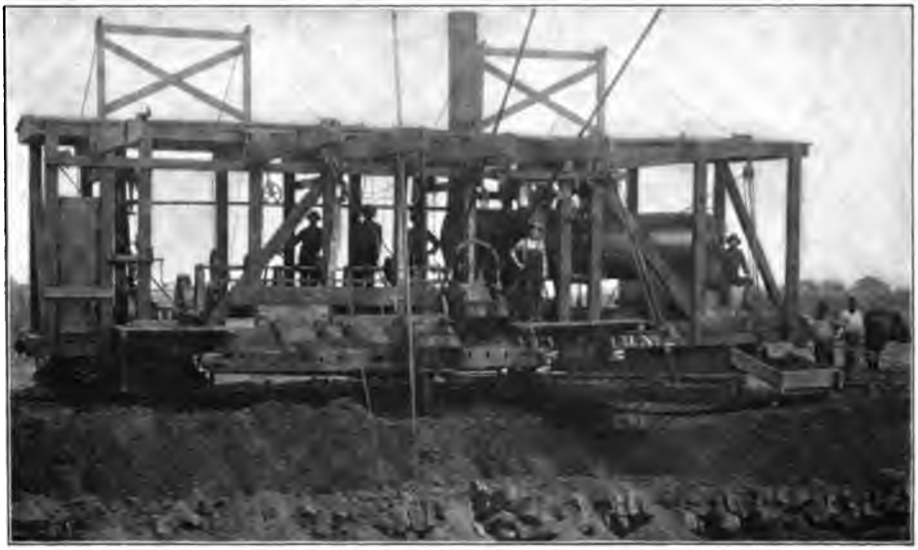

FIG. 1.—WORKING SIDE OF STUBBS' EARTH-MOVER.

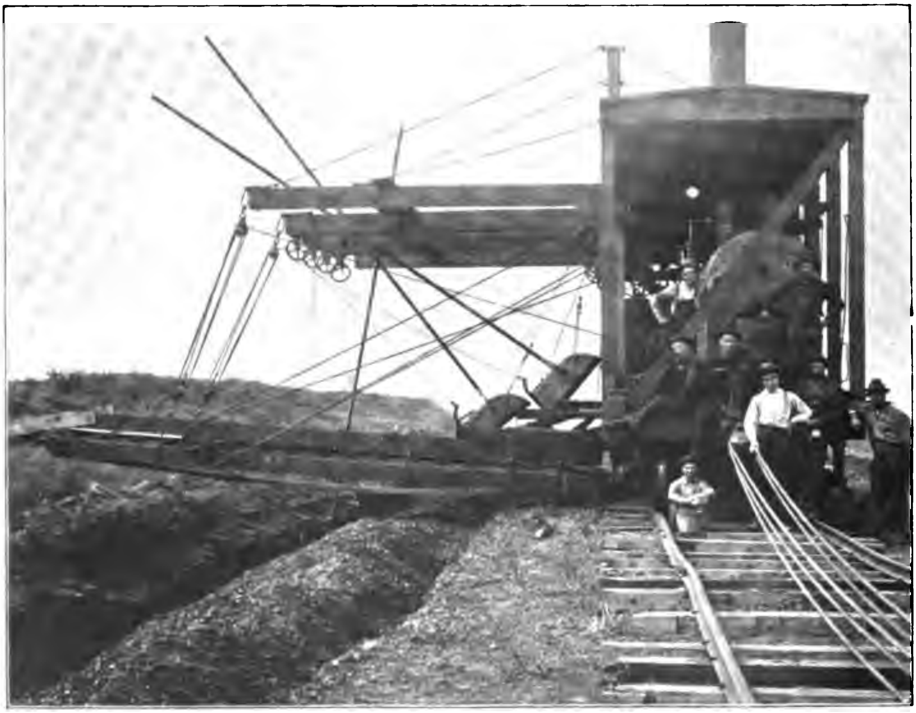

FIG. 2.—FRONT END OF STUBBS' EARTH-MOVER.

pit. For a longer pit it would probably be economical to use a regular light locomotive, though the pusher in question has the advantage that in moving to a new site it can be put into a freight train like an ordinary box-car. The work of distributing the coal-slack is under the immediate charge of a foreman, who has four shovellers in each car. Besides these men there is the engineer. The coal is spread out on the slope next the track, though some of it is thrown over on the kiln where the supply seems deficient. About three cars of coal can be distributed in 10 hours. In general about one ton of slack-coal is used for 4 to 5 yards of ballast. The pusher is also used for plowing, the plow being swung from a horizontal arm and raised or lowered to the proper position on the slope by suitable rigging. The coal is distributed over the slope and plowed under, though often the plowing is done first. The object to be attained is of course an even mixture of the clay and coal-slack.

When the clay has been plowed and the coal distributed the ballast machine or earth-mover is called into requisition. This machine is shown in Figs. 1 and 2. It consists essentially of a large flat-car upon which is mounted a 50 h. p. engine and 70 h. p. boiler. The engine actuates a horizontal shaft running lengthwise of the car and furnishing power to three small steam shovels. These are swung on projecting booms and differ from ordinary steam shovels only in their lighter weight and the fact that they pull toward rather than away from the machine. The shovels dip up the loose clay and slack and dump it upon a carrier-belt running parallel to the car. This in turn throws it upon a similar belt running at right angles to the car and dropping the material on the face of the kiln. The face is covered to a depth of 18 in. to 2 ft., and the work is ordinarily done about twice a week. If small stretches burn out sooner they are covered separately, or, in case these patches are very small and much scattered, the work is done by hand. The machine is in charge of a foreman, and the crew includes an engineer, fireman, three levermen, and a helper. In the pit at Brush siding, where the dirt is loose and easily handled, the shovels each take about one yard per minute on short runs, though in general, here and at Maxon, the work is slower. Where a pit 5,000 ft. long is open, four shovels are put on. The side carrier-belt is then divided and delivers to each end of the car. There are in that case two delivery belts. By these additions the efficiency of the machine is made much greater. At Brush, with a 1,600-ft. pit, about 10,000 cu. yards were being burned per month this summer. At Maxon, with a 3,000-ft. pit, about 15,000 cu. yards was burned in the same time. It required at Brush 14 days of preparatory work and at Maxon not much longer. A ballast machine costs about $4,000 to build. The Maxon crew includes altogether about 28 men. Aside from foremen and superintendent the wages this season were 15c. per hour, with sleeping cabins furnished. With but slight additional cost a 5,000-ft. pit can be operated. Up to that point there is a notable decrease in cost with increased output.

The patents on the machines described are owned by the Iowa Ballast and Improvement Co. of Marshalltown, of which C. C. Gilman is president and Jesse Stubbs general manager. The ballast machine, or earth-mover, is the result of the inventive genius of Mr. Stubbs, who has had long experience in ballast burning. Another machine invented by him is now controlled by the Western Wheel Scraper Co. of Aurora, Ill., and is much used. With it the plowing and distributing of the clay is done at the same time; a system not so flexible as that of the newer machine.

Under the old processes of hand-burning such a pit as the one at Maxon would have required the services of about 250 men, and the ballast would have cost about 40c. per yard. When first used the price was $1. It dropped from that to 80c., 60c., 50c., and finally to 40c., which represents about the minimum for hand work. Present contracts for machine-burned ballast range from 15c. to 20c., depending upon the amount, location, and terms of contract. In a recent contract calling for about 100,000 yards the price was 18c. in the kiln, the railway furnishing the material, scraping the ground, and laying the spur back. An estimate of the cost distributed upon the track, with average hauls of 30 miles, was 46c., though such an estimate is admittedly of only local value, the variable factors being numerous. In Missouri Wheeler estimates the cost f. o. b. at 35c. Usually the ballast is delivered to the railway in the kiln, being tested by cross trenches before acceptance.

Clay ballast has many peculiar advantages, and seems to offer large possibilities for the future. At the prices mentioned it will be seen that it becomes a competitor of stone, and, under some circumstances, of gravel. Upon one Iowa road 50c. per cub. yd. has been paid for gravel, but under favorable circumstances gravel will usually cost less than clay. The latter is, however, available over a wide area where gravels are almost entirely absent. In general the latter are found only on or close to the later drift sheets of the interior; while silts and clays suitable for making ballast are much more widely distributed.

The ballast is also lighter than gravel, being ordinarily handled with scoop shovels, and about one-third more can be handled in the same time if sideboards be put on the cars. In practice, where the haul is short, this fact is not taken advantage of, the economy in the time of unloading being worth more. Trackmen report, however, that a crew will, in the same time, ballast more track with the clay than with the gravel, because it is easier to handle and to tamp into place. Its advantages in these respects are even greater when compared with stone, and the same properties make the repair of track and the relaying of ties cheaper where clay ballast is used. The main and peculiar advantages of the burned clay, however, are the facts that it is elastic and hence easier on rolling stock, and porous so that the track is well drained. This increases the life of the ties and helps to keep up the track in bad weather. Among its minor advantages is its sterility, which serves to keep the track free from weeds and grass. It might be suspected that the ballast would crush and churn to dust, but as a matter of fact it does not to any great extent. As ordinarily burned it has about the crushing strength of soft-burned brick, and if it were desirable the strength could of course be increased by harder burning. The life of the material now in use, however, as well as the experience derived from the use of burned mine-slack, a somewhat similar material, indicates that this is unnecessary. It seems probable that as the material becomes better known there will be an increasing demand for it, not only for ballasting railway tracks but also for surfacing wagon roads.

COAL AND COKE.

A YEAR of great industrial activity all over the civilized world is naturally one of large consumption of coal; and this was the marked feature of 1897. The coal output of the world was the largest ever reported.

The coal production of the United States in 1897 reached a total of 200,259,624 short tons—equal to 181,675,531 metric tons—showing an increase of 12,602,374 short tons, or 6.9% over that of 1896. There was a decrease in the anthracite output but an increase in bituminous, notwithstanding a strike which for two and a half months interfered with its production. The average value of bituminous coal at the mines was 89c. per metric ton, or 81c. per short ton; of anthracite, $1.63; and of cannel, $2.71; the average for all coal mined being $1.03 per short ton. Bituminous coal constitutes about three-quarters of the whole production.

TOTAL PRODUCTION OF COAL IN THE UNITED STATES.
(In tons of 2,000 lb.)

States.	1896.			1897.		
	Tons.	Value.		Tons.	Value.	
		Totals.	Per Ton.		Totals.	Per Ton.
Bituminous:						
Alabama	5,747,698	$5,460,814	$0.95	5,868,271	$5,164,078	$0.88
Arkansas	889,750	1,005,417	1.13	826,243	900,605	1.09
California	70,649	161,835	2.28	87,449	196,252	2.24
Colorado	3,371,633	5,057,449	1.50	3,501,543	4,690,068	1.34
Georgia	246,012	214,080	0.87	196,268	147,479	0.75
Illinois (a)	19,786,626	14,246,870	0.72	20,072,758	14,472,529	0.72
Indiana	4,068,124	3,152,796	0.77	4,228,085	3,382,468	0.80
Indian Territory (a)	1,235,338	1,914,766	1.55	1,334,795	1,801,973	1.35
Iowa	4,115,000	4,773,400	1.16	4,560,000	5,107,200	1.12
Kansas	3,191,748	3,227,357	1.01	3,672,195	3,931,707	1.07
Kentucky	3,128,818	2,346,623	0.75	3,283,762	2,429,983	0.74
Maryland	4,062,716	3,192,130	0.76	4,411,932	3,353,068	0.76
Michigan	85,465	123,070	1.44	152,850	215,518	1.41
Missouri (a)	2,420,147	2,883,169	1.19	2,429,388	2,684,757	1.10
Montana (a)	1,157,722	2,262,768	1.95	1,603,237	2,870,481	1.79
Nebraska	....	....	....	500	1,750	3.50
New Mexico	655,370	983,055	1.50	733,539	1,195,915	1.63
North Carolina	14,970	28,208	1.88	20,611	28,855	1.40
North Dakota	94,500	113,950	1.10	120,000	120,000	1.00
Ohio	12,912,608	10,071,834	0.78	12,465,533	9,847,771	0.77
Oregon	90,715	240,395	2.65	110,929	258,464	2.33
Pennsylvania	50,273,656	33,180,613	0.66	54,454,655	36,484,619	0.67
Tennessee	2,663,714	2,024,422	0.76	2,902,341	2,263,826	0.78
Texas	585,000	1,053,000	1.80	598,987	964,369	1.61
Utah	503,243	608,924	1.21	506,455	607,746	1.20
Virginia	1,018,237	763,677	0.75	1,418,746	879,622	0.62
Washington	1,295,313	2,914,454	2.25	1,489,815	3,322,287	2.23
West Virginia	13,509,964	9,456,975	0.70	13,762,133	9,751,392	0.65
Wyoming	2,273,928	2,946,106	1.30	2,744,960	3,431,200	1.25
Total bituminous { Short tons.	139,468,659	$113,401,602	$0.81	147,557,960	$120,505,982	$0.81
Total bituminous { Metric tons.	126,525,967	....	0.89	133,864,599	....	0.89
Cannel:						
Kentucky { Short tons.	54,661	146,491	2.68	56,511	153,145	2.71
Kentucky { Metric tons	49,588	....	2.95	51,267	....	2.98
Anthracite:						
Colorado	59,600	149,000	2.50	64,097	150,628	2.35
Pennsylvania	48,074,330	86,533,794	1.80	52,581,036	85,707,089	1.63
Total anthracite { Short tons.	48,133,930	$86,682,794	$1.80	52,645,133	$85,857,717	$1.63
Total anthracite { Metric tons.	42,667,101	....	2.03	47,759,665	....	1.79
Grand total coal { Short tons.	187,657,250	$200,230,887	$1.06	200,259,624	$206,516,844	$1.03
Grand total coal { Metric tons.	170,242,657	....	1.17	181,675,531	....	1.13

(a) Fiscal year.

TOTAL PRODUCTION OF COKE IN THE UNITED STATES. (IN TONS OF 2,000 LB.)

States.	1896.			1897.		
	Tons.	Value.		Tons.	Value.	
		Totals.	Per Ton.		Totals.	Per Ton.
Alabama	1,347,028	$2,057,596	$1.65	1,881,252	$2,417,191	$1.75
Colorado	324,700	974,100	3.00	320,738	882,029	2.75
Georgia	55,467	88,737	1.60	54,000	87,480	1.62
Illinois	2,900	4,640	1.60	3,000	4,950	1.65
Indiana	4,890	7,610	1.55	7,000	11,200	1.60
Indian Territory	7,156	16,816	2.35	28,600	64,350	2.25
Kansas	8,147	16,294	2.00	10,000	20,000	2.00
Kentucky	24,519	36,778	1.56	32,285	53,916	1.67
Montana	63,694	461,260	7.24	66,182	440,637	7.11
New Mexico	20,210	48,453	2.00	28,500	57,000	2.00
Ohio	16,184	27,998	1.73	12,600	22,050	1.75
Pennsylvania	6,613,180	10,581,088	1.60	8,533,291	15,786,588	1.85
Tennessee	332,746	499,019	1.50	350,000	560,000	1.60
Utah	32,491	71,480	2.20	25,000	56,250	2.25
Virginia	131,400	193,138	1.47	150,000	232,500	1.55
Washington	22,368	89,472	4.00	25,000	87,500	3.50
West Virginia	1,452,392	2,105,968	1.45	1,691,092	2,536,638	1.50
Wyoming	19,548	38,086	2.00	23,800	47,600	2.00
Total coke { Metric tons	10,369,015	$17,311,823	$1.67	12,742,340	$23,367,879	$1.83
Total coke { Short tons	9,406,770	....	1.34	11,563,678	....	2.02

UNITED STATES PRODUCTION OF COAL, 1893–97. (IN TONS OF 2,000 LB.)

Year.	Alabama.	Arkansas	California.	Colorado.	Georgia.	Illinois.	Indiana.	Indian Territory	Iowa.	Kansas.
1893	5,170,042	740,000	75,000	3,946,232	372,191	19,949,564	*a*4,583,000	1,229,562	*a*3,790,000	2,881,931
1894	4,381,295	*a*723,860	94,754	2,994,028	354,111	*a*17,113,576	*a*3,065,394	1,072,542	*a*3,776,373	3,611,214
1895	5,680,410	900,671	80,115	3,582,393	414,310	17,735,864	4,312,084	1,228,440	3,995,836	3,190,843
1896	5,747,698	889,750	70,649	3,371,633	246,012	*a*19,786,626	*a*4,068,124	1,235,333	4,115,000	3,191,748
1897	5,868,271	826,243	87,449	3,501,543	196,268	*a*20,072,758	*a*4,228,085	1,334,795	4,560,000	3,672,195

Year.	Kentucky	Maryland	Michigan	Missouri.	Montana.	Nebraska.	New Mexico.	North Carolina.	North Dakota.	Ohio.
1893	3,302,250	3,327,749	22,072	*a*3,190,442	783,300	....	457,085	17,000	*b*125,000	14,828,097
1894	2,967,195	3,101,082	....	*a*2,383,322	688,780	....	823,721	18,157	*b*65,000	11,902,678
1895	3,207,770	3,479,499	....	2,283,081	1,104,854	....	367,442	15,386	79,850	13,683,879
1896	3,128,818	4,062,716	85,465	*a*2,420,147	*a*1,157,722	....	655,370	14,970	94,500	12,912,608
1897	3,283,762	4,411,982	152,850	*a*2,429,388	*a*1,603,237	500	783,539	20,611	120,000	12,465,583

Year.	Oregon	Pennsylvania.		Tennessee.	Texas.	Utah.	Virginia	West Virginia.	Washington.	Wyoming	Totals.
		Bituminous.	Anthracite.								
1893	41,478	43,421,808	47,179,563	1,857,432	322,745	421,400	842,933	*a*9,838,011	1,211,550	2,243,401	176,180,928
1894	42,509	41,867,188	51,828,405	2,589,664	469,904	453,601	925,837	*a*10,559,926	1,183,660	2,224,135	169,867,781
1895	65,918	51,813,112	58,660,657	2,319,720	490,608	530,713	1,083,229	12,355,113	1,184,619	2,197,914	189,053,390
1896	90,715	50,273,656	48,074,330	2,663,714	585,000	503,243	1,018,237	13,509,964	1,295,313	2,273,928	187,657,250
1897	110,929	54,454,655	52,581,036	2,902,341	598,987	506,455	1,418,746	13,762,133	1,489,815	2,744,960	200,259,624

(*a*) Fiscal year. (*b*) Estimated.

IMPORTS OF COAL AND COKE INTO THE UNITED STATES.

Year.	Coal.					Coke.		
	Anthracite.	Bituminous.	Totals.			Short Tons.	Metric Tons	Value.
	Long Tons.	Long Tons.	Long Tons.	Metric Tons	Value.			
1893	53,768	1,082,993	1,236,761	1,154,949	$3,772,004	33,165	30,080	$99,683
1894	90,068	1,242,714	1,332,782	1,352,665	4,019,537	29,137	26,427	70,358
1895	141,337	1,212,023	1,353,360	1,375,013	3,955,828	29,622	26,867	71,366
1896	102,566	1,246,991	1,349,557	1,371,155	3,727,802	43,772	39,347	114,713
1897	3,281	1,276,963	1,280,244	1,300,727	3,432,154	35,193	31,927	98,558

EXPORTS OF COAL—DOMESTIC PRODUCTION. (IN LONG TONS.)

Year.	Anthracite.		Bituminous.		Totals.	
	Quantity.	Value.	Quantity.	Value.	Quantity.	Value.
1893............	1,334,287	$6,341,007	2,324,591	$6,009,801	3,658,878	$12,250,808
1894............	1,440,625	6,359,021	2,195,716	4,970,270	3,636,341	11,329,291
1895............	1,470,710	5,937,130	2,211,983	4,816,847	3,682,693	10,753,977
1896............	1,350,000	5,925,506	2,276,202	5,072,818	3,626,202	10,998,324
1897............	1,297,282	5,830,635	2,400,744	5,332,856	3,698,026	11,163,491

PRODUCTION AND CONSUMPTION OF COAL IN THE UNITED STATES. (IN LONG TONS.)

Year.	Production.	Imports.	Total Supply.	Exports.	Consumption.	
					Tons.	Metric Tons.
1893............	157,304,400	1,136,761	158,441,161	3,658,878	154,782,283	157,258,800
1894............	151,667,661	1,332,782	153,000,443	3,636,341	149,364,102	152,758,927
1895............	168,797,669	1,353,360	160,333,029	3,682,693	156,650,336	159,156,741
1896............	167,551,116	1,349,557	168,900,673	3,626,202	165,274,471	167,918,863
1897............	178,803,236	1,280,244	180,083,480	3,698,026	186,385,454	189,367,621

The chief incident in the bituminous coal trade in 1897 was the great strike, which began on July 4 and continued until the middle of September, when a compromise was agreed on at a conference held in Chicago. The strike was in the first place for an increase in the mining rate, which was 54c. per ton in the Pittsburg district and 25c. in West Virginia. A second point claimed was for a rate adjusted by districts to secure equality in the miners' earnings on the one hand and the conditions of competition on the other. The compromise secured about one-half the advance asked by the miners; it also included a partial adjustment of the district differences, and the adoption of uniform screens for preparing coal for market. The agreement was generally accepted, though in Illinois some local differences kept the miners out until November.

This strike did not affect the districts east of Pittsburg, which ship their coal to the seaboard chiefly, nor did it touch the Pennsylvania coke region, where the mining rate by agreement is based on the selling price of coke. The West Virginia miners generally refused to join in it, and this was largely instrumental in securing the failure of the strike. The miners of Iowa and Missouri also generally continued at work. At no time was there any scarcity of coal. No great strike in the history of the coal trade was so free from violence as that of 1897. The operators obtained injunctions from the courts to prevent interference by the strikers with their works, and there was no destruction of life or property.

The chief cause of the strike was that in a large part of the Western bituminous mines work is not regular and the miners' earnings are thereby reduced to a very low point. The existing coal mines of the United States could probably supply a demand 50% greater than at present, if they were worked to full capacity; and under these circumstances it is not surprising that low prices should be the rule.

The use of electric and compressed air machines for cutting coal is steadily extending. In 1897 electricity probably took the lead in the number of new installations.

Anthracite.—The total output of Pennsylvania anthracite coal in 1897 was 44,552,514 long tons (49,898,816 short tons, or 45,265,761 metric tons), and was less than in 1896 or 1895. It is difficult to fix the value of this product exactly. The average selling price of anthracite coal at New York in 1897 was about $3.25 per ton. The reports of the anthracite companies, as a rule, give no figures as to prices or costs. The Delaware & Hudson Canal Co. puts the average price obtained for coal sold during the year at $2.02 per ton; and the Lehigh Coal & Navigation Co. puts the average selling price at $1.61, figures which do not include transportation to tidewater. This company reports cost of mining and preparing coal at $1.29 per ton in 1897. From the Delaware & Hudson report we find the approximate cost to be $1.80, which includes $1.31 for mining and preparation, $0.38 for transportation, and $0.11 for general expenses.

The low prices at which bituminous coal is delivered in the East, where anthracite was formerly the only fuel, have given it the preference for all manufacturing uses and have gradually limited the employment of anthracite to domestic uses, and in that field it is encountering each year greater competition from gas and electricity in the large cities.

Imports and Exports.—The foreign trade of the United States in coal continues to be quite small. The total imports for 1897 being 1,300,147 long tons, chiefly from British Columbia, received at California ports. The exports were 3,626,202 tons, mostly to Ontario. Outside of Canada the export of coal is almost all to Mexico and the West Indies and a little to South America.

COKE.

As might have been expected from the activity of the iron trade during the latter half of the year, the output of coke showed a large increase. The total for 1897 was 12,742,340 short tons, a gain of 2,373,325 tons, or more than 20% over 1896. While Pennsylvania continues to be the chief maker of coke, West Virginia is becoming more and more an important source of supply.

Improvements in the manufacture of coke in 1897 made more progress in the South than elsewhere. The washing of coal and slack intended for coke has been introduced at a number of mines. The erection of a large block of by-product coke ovens of the Semet-Solvay type at Ensley City in Alabama was begun, and the plant will be in full operation in 1898. Arrangements have been made for a similar plant at Birmingham in Alabama, which is not only to supply coke, but will also utilize the gas from the ovens in supplying the city. It is expected that fuel gas as well as illuminating will be supplied to the factories.

The experimental by-product plants in the Connellsville region in Pennsylvania are running steadily and doing well. At the Semet-Solvay plant at Dunbar arrangements are in progress for utilizing the surplus gas to run gas engines, which will operate a large electric plant, from which power can be transmitted to mines in the district.

Little progress has been made by the New England Gas and Coke Co. on the plant which it is building near Boston to make coke from Nova Scotia coal, and to supply gas to Boston and other cities.

COAL PRODUCTION OF OTHER COUNTRIES.

The accompanying table gives the coal production of the world, and shows that the total in 1897 was 600,000,000 tons, of which Great Britain supplied 34%, the United States 30%, and Germany 18%; these three countries mining 82% of the total. Great Britain is the only large exporting country.

COAL PRODUCTION OF THE WORLD. (IN METRIC TONS.)

Year.	Africa	Australasia.					Austria-Hungary	Belgium.	Canada.		France.	Germany.
		New South Wales.	New Zealand.	Queensland.	Tasmania	Victoria.			Alberta, British Columbia	N. Brunsw'k, Nova Scotia.		
1892..	250,000	3,841,842	684,155	269,354	36,243	30,445	29,225,004	19,583,173	1,006,721	1,974,059	26,178,078	92,544,050
1893..	300,000	3,330,939	691.548	268,260	48,898	98,202	26,548,604	19,407,251	925,298	2,556,085	25,788,078	95,476,208
1894..	600,000	3,730,829	745,000	275,036	31,052	174,407	26,905,490	20,534,501	1,327,259	2,168,340	27,416,905	101,485,857
1895..	700,000	3.500.000	760,000	275,000	38.000	200,000	27,250,000	20,414,849	1,408,911	1,782,782	28,236,089	103,876,813
1896..	250,000	3,972,068	805,537	377,332	44,286	230,187	9,899,522	21,252,370	859,775	2,259,168	18,750,452	85,639,861

Year.	India.	Italy.	Japan.	Russia.	Spain.	Sweden	United Kingdom.	United States.	All Other Countries.	Totals.
1892..	2,578,299	295,718	3,199,768	6,825,020	1,461,196	199,380	184,713,640	163,657,968	1,500,000	539,554,118
1893..	2,570,332	317,249	3,328,879	6,560,320	1,531,810	199,983	166,971,440	159,919,176	1,500,000	518,456,180
1894..	2,620,910	271,294	3,500,000	7,498,000	1,659,264	213,634	188,277,525	154,211,308	1,600,000	545,246,611
1895..	2,650,000	250,000	3,650,000	7,551,180	1,774,560	205,000	194,850,604	177,595,679	1,750,000	578,209,367
1896..	3,909,581	276,197	e3,700,000	e7,750,000	1,852,947	225,848	198,487,040	170,242,657	e2,000,000	533,784,828

(e) Estimated.

North America.—Canada is the only producing country of any importance outside of the United States. The total reported in 1897 was 3,876,201 short tons (3,517,265 metric tons). The output comes almost entirely from Nova Scotia on the Atlantic coast, where there was a small increase, and British Columbia on the Pacific, where the production of 882,854 short tons was 13,368 tons less than in 1896. Of this 619,861 tons were exported to the United States, nearly all to California.

The production of coal in Mexico in 1897 was 359,070 metric tons, of which 63,215 were converted into coke, producing 31,877 tons. The production of coal in 1896 was 253,104 metric tons, and of coke 27,215 metric tons.

South America.—Argentina and Chile are the coal-mining countries of the continent. The output of Chile is the more important but is not sufficient for the domestic consumption, and large amounts have to be imported. The imports of coal into Chile are shown in the following table, for which we are indebted to Jackson Bros. of Valparaiso:

IMPORTS OF COAL INTO CHILE.

Year.	Steam Coal.					Smelting Coal.		
	Hartley.	Orrell.	Other Classes.	Australian used as Steam.	Total.	English.	Australian used as Smelting.	Total.
	Tons.	Tons.	Tons.	Tons.	Tons.	Tons.	Tons.	Tons.
1892..........	121,270	9,929	36,994	142,473	310,666	14,195	36,979	51,174
1893..........	171,473	21,540	42,328	127,118	362,454	15,223	23,152	38,375
1894..........	208,639	13,082	104,132	206,586	532,439	20,120	52,476	72,596
1895..........	189,119	16,412	157,498	227,014	590,043	22,809	41,988	64,797
1896...... ..	151,547	9,254	115,024	290,073	565,898	14.889	38,186	53.075
1897..........	126,909	....	52,979	296,173	476,061	7,646	50,172	57,818

Extensive coal fields are known in Colombia and Brazil, but have not been worked except to a very small extent to meet the light local demand.

Europe.—Great Britain in 1897 produced 202,119,196 long tons (205,353,103 metric tons), an increase of 6,767,245 long tons, or 3.5% over 1896. Of this great total England supplied 143,477,127 tons; Wales, 29,424,048; Scotland, 29,082,996; Ireland, 135,025 tons. Great Britain exported in 1897 a total of 37,102,138 long tons, or 18.4% of its total output. The consumption of coal—approximately 165,017,058 long tons—was less than that of the United States.

The production of Germany, which is increasing with rapid strides, in 1897 was 120,431,056 metric tons, of which 91,007,624 tons was bituminous coal, and 29,423,432 tons brown coal or lignite. The total increase over 1896 was 7,959,950 metric tons, or 7.1%. The brown coal mines are more diligently worked than ever, and a considerable part of their production is worked up into briquettes, which will stand transportation and handling as the coal itself will not. Germany, like the United States, practically consumes all the coal it mines, the quantity exported to neighboring countries being very nearly balanced by the imports from Bohemia and Austria.

France produced in 1897 a total of 30,735,353 metric tons of coal, an increase of 1,865,262 tons, or 6.5%. The supply is not quite sufficient, some coal being imported from England and Belgium.

The output of Austria-Hungary in 1897 was 28,650,000 tons, a small increase. About one-third of this is brown coal, or lignite. The development of the coal fields, especially in Hungary, is being pushed.

Belgium produced 21,534,629 metric tons in 1897, or 284,629 tons more than in 1896. The greater part of this production is used in manufacturing and metallurgical work.

The Russian production of 8,235,000 metric tons in 1897 showed an increase, chiefly in Poland and the Donetz basin. The Russian government is making careful examination of the coal deposits on the line of the Siberian railroad, with a view to their early development.

The production of Spain in 1897 was made up of 1,883,500 metric tons of coal and 55,900 tons of lignite, the change from 1896 being very small.

Asia.—Two Asiatic countries only are at present developing their coal mines with any degree of activity; Siberia being included with European Russia. In India the coal production is steadily increasing, and the mines are now supplying a large part of the demand for the railroads and other large consumers, which formerly imported coal.

Japan is actively exploiting her coal mines and is a sharp competitor for trade in China and other Eastern countries. The Japanese are also making arrangements to work the coal mines of Formosa, where there are deposits of great value.

There is some prospect of the opening of the Chinese coal fields, the reports of their great extent and probable value having been confirmed by recent examinations. Under foreign influence and direction it is probable that development of the fields and the extension of railroads will soon begin. There is a small output in China now.

Africa.—With the exception of a small quantity in Algeria, the production of coal in Africa is all in the colony of Natal and the South African Republic.

The report of the State Mining Engineer shows that in the year 1897 there were 42 coal mines in the Transvaal, and the total coal mined was 1,667,752 tons. The coal sold was: Rough coal, 1,372,695; nut, 225,978; slack, 1,539; total, 1,600,212 tons, an increase of 162,915 tons, or 11.4% over 1896. The average value of rough coal was $1.92; nut, $1.32, or for all coal $1.64 per ton at the mine. There were 313 white men and 2,744 natives employed on the surface; 159 whites and 3,917 natives underground; a total of 472 whites and 6,661 natives, or 7,133 men in all. The total mined was 234 tons per man.

Australasia.—In most of the Australasian colonies the coal production is nearly stationary. New Zealand, which is the second producer in importance, shows some decrease. In New South Wales, the most important colony in this respect, the output in 1897 was 4,383,591 long tons (4,453,728 metric tons), the largest output ever reported and an increase over 1896 of 474,074 long tons, or 12.1%. Of the total 1,197,631 tons were exported to foreign countries; 1,498,992 tons to other colonies; and 1,689,968 tons remained for consumption in the colony.

THE ANTHRACITE COAL TRADE.

Anthracite coal is consumed chiefly in the Northeast and along the seaboard, a comparatively small amount being shipped to Western cities, where it is an article of luxury rather than of necessity. The anthracite field of Pennsylvania has gradually come under the control of eleven large companies, all but two of them owning railroads and being thus interested in the transportation as well as the mining of coal. This has brought about a condition of affairs which was so fully described in THE MINERAL INDUSTRY, Vol. IV., that it need not be further treated here.

For the greater part of 1897 the production of anthracite was regulated by a tacit agreement among the companies. Overproduction in 1895 and 1896 had demoralized the trade, and at the end of the latter year nearly all the companies had large unsold stocks, which the restricted output of the first half of 1897 enabled them to work off. For the first six months the output was, in long tons, which measure is always used in the anthracite trade: January, 2,854,000; February, 2,520,000; March, 2,541,000; April, 2,552,000; May, 2,724,000; June, 2,920,000; making a total for the six months of 16,111,000 tons. Even this restricted output was almost too much for the market.

The selling quotations f. o. b. vessel in New York harbor were on the basis of $4.25 for stove size coal and $4.50 for egg and chestnut. What are known as the steam sizes—pea, buckwheat and rice—smaller than chestnut, sell at prices varying with the demand. The six months of restricted production ending with June had enabled the different companies to work off their surplus stock, the nominal price was advanced to $4.25 per ton for egg and chestnut and $4.50 for stove, though sales continued to be made not only at but also below what was known as the June circular, and up to the close of the year it is doubtful whether the increase had really taken effect.

In July production went up to 3,975,000 tons; 4,087,000 tons in August, and 4,073,000 tons in September. In October the maximum for the year was reached with a production of 5,121,000 tons. In November, 4,436,000 tons, and in December 3,834,000 tons were mined.

PENNSYLVANIA SHIPMENTS AND PRODUCTION OF ANTHRACITE COAL.

Companies.	1895.		1896.		1897.	
	Long Tons.	Per Cent.	Long Tons.	Per Cent.	Long Tons.	Per Cent.
Philadelphia & Reading	9,905,059	21.3	9,019,533	20.9	8,395,411	20.2
Lehigh Valley	7,360,454	15.8	6,749,128	15.6	6,425,227	15.4
Central of New Jersey	5,335,785	11.4	4,999,008	11.6	4,730,860	11.4
Delaware, Lackawanna & Western	6,129,261	13.2	5,627,583	13.0	5,690,684	13.7
Pennsylvania Coal Co	1,828,382	3.9	1,728,972	4.0	1,777,841	4.3
Delaware & Hudson and Lackawanna	6,151,148	13.3	5,835,621	13.5	5,646,848	13.5
Other lines	9,801,888	21.1	9,217,698	21.4	8,970,988	21.5
Total shipments	46,511,477	100.0	43,177,485	100.0	41,637,864	100.0
Consumed and sold at mines, 7% of shipments	3,255,803	......	3,022,424	......	2,914,650	......
Total production, long tons	49,767,280	......	46,199,909	......	44,552,514	......
Total production, short tons	55,739,353	......	51,742,898	......	49,898,816	......
Total production, metric tons	50,563,556	......	47,939,098	......	45,265,761	......

The shipments in 1897 were less than those of 1896 by 1,539,621 long tons, or 3.6%. Compared with 1895, which was the year of maximum trade, they show a decrease of 4,874,613 tons, or 10.5%.

The division by companies is not quite complete. The shipments of the Erie are included under the head of Delaware & Hudson and Lackawanna; while under "other lines" are found those of the Pennsylvania, the New York, Ontario & Western, the New York, Susquehanna & Western and others of minor importance. By districts the Lehigh region furnished in 1897 a total of 6,249,450 tons, or 15% of the total; the Schuylkill region 12,181,061 tons, or 29.2%; the Wyoming region 23,207,263 tons, or 55.8%.

THE BITUMINOUS COAL TRADE.

The seaboard bituminous trade was marked chiefly by continued sharp competition, low prices, and the failure of all efforts to combine producers in any sort of agreement to regulate the trade.

Buffalo.—Our special correspondent says that anthracite coal shippers and dealers reported a fairly satisfactory condition of the trade. For a number of years the prices, both East and West, were so low, and competition so sharp, that the profits were not considered adequate to the demands of the large capital invested, but higher prices have placed the entire trade on a better footing. There is cutting of the price in Buffalo, as elsewhere, and there always will be, though it is not so general now as it sometimes has been.

The bituminous coal interests were in a much more hopeful state. Prices were better than in 1896 and the stocks smaller. The strike, though it is estimated to have lessened the soft-coal handling in Buffalo by 100,000 tons, did not do the permanent harm that might have been expected. Prices advanced on account of it, and the railroads being obliged to draw on their stock piles, are now more dependent on the producers than formerly.

The price of bituminous coal on cars in Buffalo fluctuated, running from

$1.40 to $1.75 and to vessels $2.25 per ton after the settlement of the strike. There was an increase of bituminous coal shipments from Buffalo by lake.

The coke trade was in good condition. Prices were firm and the demand was such that nearly all the ovens were kept busy.

LIST PRICES OF ANTHRACITE COAL AT BUFFALO IN 1897.

Date.	F. O. B. Buffalo.		On Cars, Buffalo or Susp. Bridge.		Per Short Ton, at Retail in City.			
	Grate.	Stove, Egg, Nut.	Grate.	Stove, Egg, Nut.	Grate.	Stove, Egg, Nut.	Pea.	Blossburg.
January 2	$5.05	$5.30	$4.75	$5.00	$5.00	$5.25	$4.00	$4.00
May 1	4.80	5.05	4.50	4.75	4.75	5.00	3.75	4.00
July 1 to close	5.05	5.30	4.75	5.00	5.00	5.25	4.00	4.00

The following were the prices of bituminous coal in Buffalo at the end of 1897 per ton of 2,000 lb. in car lots on track, variations being as to size: Allegheny Valley region, $1.80@$1.20; Reynoldsville, $1.95@$1.20; Pittsburg, $1.95@$1.25; Fairmount, $1.95@$1.25; Mercer County, $1.85@$1.20. For Briar Hill lump the price was $3.25@$3.50 per ton for car lots on track, and for No. 1 cannel $4.50 per ton.

Coke at Buffalo was quoted during the year from $2.65 to $3 per ton for Reynoldsville, and from $3 to $3.50 for Connellsville; both for car lots.

The following statistics, collected by William Thurstone, secretary of the Buffalo Merchants' Exchange, show the coal trade of the port for five years:

COAL TRADE AT BUFFALO DURING 1897, ETC.

	1893.	1894.	1895.	1896.	1897.
Receipts—					
Anthracite, canal	70.546	42,130	14,038	38,061	9,052
Anthracite, rail (estimated)	4,700,000	4,230,000	4,750,000	4,550,000	4,750,000
Bituminous, lake	....	....	240	....	....
Bituminous, rail	2,896,614	2,280,470	2,727,308	2,500,000	not rep.
Blossburg, rail	25,000	25,000	25,000	25,000	20,000
Shipments—					
Anthracite, canal	....	....	1,376	1,104	....
Bituminous, canal	19,336	8,840	4,259	956	164
Anthracite, lake	2,681,173	2,475,255	2,612,768	2,391,568	2,126,713
Blossburg, lake	7,500	7,500	6,000	6,000	5.000
Bituminous, lake	15,000	2,500	2,000	2.500	100,616

Chicago.—Our special correspondent writes that the anthracite coal trade of Chicago during the year 1897 was very unsatisfactory. The long-continued industrial depression seems to have permanently crippled the anthracite coal business in the West. Throughout the whole year prices on hard coal were uncertain, and circular rates were never upheld. Competition was very much in evidence and those who bought got it at low prices. Almost all the year the market looked as though profit was a secondary consideration, and in consequence contracts were booked at ridiculously low prices. The year opened with circular prices at $5.35 to $5.60, and these continued up to September, when an advance was made to $5.60 to $5.86; but the advanced prices did not hold long, and the year closed at $5.35 to $5.60.

The tonnage of hard coal placed from this market during the year was a little in advance of 1896. The receipts of hard coal by lake during the year showed a decrease of over 100,000 tons, as compared with 1896, and shipments by rail decreased fully 70,000 tons. The smaller output of anthracite coal and the scarcity of boats for lake traffic prevented any large tonnage.

Bituminous coal was very quiet for the first half of the year 1897, but from July on business gradually grew better, and the year closed with a very fair trade, and at prices wherein profit was to be had. At no time did the great strike among the soft coal miners in the bituminous coal-producing States affect this market to any extent. Throughout the entire year there was an ample supply of soft coal to be had. It has been observed for the past few years that the better grades of bituminous coal have grown much in favor for domestic consumption, and this fact has undoubtedly been the means of a decreased consumption of anthracite. Kentucky and West Virginia, which send the larger part of the better grades of soft coal to this market, shipped to Chicago in 1897 fully 200,000 tons more coal than in the preceding year. Receipts of soft coal from the other States for 1897 showed large increases, as the demand was active. Prices in both steam and domestic coals for the first half of the year were very unstable, but from July on they grew firmer.

Pittsburg.—Our special correspondent writes of the Ohio River coal trade that the year 1897 was notable in the history of the Pittsburg coal trade. First, there was a long and bitter strike of the coal miners, lasting about five months; this was followed by a low stage of water that prevented shipments, with one small exception in July, until November. By far the most important event was the government purchase of the locks and dams on the Monongahela, making a free river from Pittsburg to Morgantown; it was a triumph of the river men after a fight of over a quarter of a century. Although the transfer was only made in July, many improvements have been made, plans adopted for new mills and furnaces along the banks of the great valley. It would be impossible to estimate the great value to Pittsburg of free navigation. New lines of steamers have been placed on the river, hundreds of thousands of acres have been disposed of for manufacturing purposes; farms that were scarcely mentioned have been picked up for coal-mining purposes. In regard to the coal trade, Pittsburg is now on an equal footing with the Kanawha and other rivers that have been free from tolls for many years. The toll collection has disappeared between Pittsburg and the headwaters of the Monongahela. The railroads did a large business, exceeding that of 1896, filling all their lake contracts.

SHIPMENTS OF COAL FROM PITTSBURG BY THE OHIO RIVER IN SHORT TONS.

Year.	Cincinnati.	Louisville.	Total.	Year.	Cincinnati.	Louisville.	Total.
	Tons.	Tons.	Tons.		Tons.	Tons.	Tons.
1882	1,378,480	1,467,160	2,845,640	1890	1,304,640	2,042,160	3,346,800
1883	1,261,820	2,258,480	3,519,800	1891	1,125,000	1,931,600	3,056,600
1884	985,240	1,232,040	2,217,280	1892	978,560	1,519,960	2,498,520
1885	1,303,600	1,693,360	2,996,960	1893	879,950	1,617,840	2,497,790
1886	1,329,160	1,537,406	2,866,566	1894	1,139,920	1,388,280	2,528,200
1887	830,800	1,438,920	2,269,720	1895	984,400	1,384,080	2,368,480
1888	2,053,560	2,340,520	4,394,080	1896	2,029,760	2,578,120	4,607,880
1889	1,214,400	1,515,800	2,730,200	1897	1,144,568	922,800	2,067,368

The strike and low water combined to make the shipments for 1897 the smallest for any year in the table.

THE BY-PRODUCT COKE OVEN.

BY W. H. BLAUVELT.

SINCE the first discussion of this subject in THE MINERAL INDUSTRY, Vol. IV., pp. 215–242, the position of the by-product coke oven in America has been very materially altered, especially as regards the use of the coke in the blast furnace. When the article referred to was in preparation, toward the close of 1895, the 12 Semet-Solvay ovens at Syracuse constituted the only by-product plant in operation in the United States, and although they had been running since 1892, the coke produced had not been available for blast-furnace use. The action of the ovens on American coals was therefore a matter of conjecture in the minds of most of our furnace managers, and deductions made from European practice failed to carry the assured conviction demanded by those who felt the responsibility for the investment of capital.

But the 75 Semet-Solvay, and the 60 Otto-Hoffmann ovens then under construction, were put in operation a few months later, and others have been added since, so that there are now about 250 by-product ovens producing coke for blast-furnace use, and retort oven coke is not an unfamiliar object in the market. It has been tried in the cupola and reported "equal in every respect to the best 72-hour beehive coke," and in the blast furnace it is in use on an equal footing with the product of the beehive oven. At one blast furnace, which was blown in on retort coke, and which has used the new fuel either in whole or in part for over a year, the proportions of retort and beehive coke in the charge are often changed, as the supply of either requires, from 100% retort coke to more than 50% beehive, with the assurance born of experience that the change will in no way affect the operation of the furnace.

As familiarity with the retort coke increases it is no longer condemned at sight because it lacks the carbon glaze of the beehive product ; the investigation goes deeper, into the cellular structure, hardness, and other points that really affect its value, as in ordinary beehive coke.

No claim is made by the advocates of the retort ovens that they will produce as good coke from an inferior coal as from one of better quality, but it is not claiming too much to say that it has now been clearly demonstrated by trial in the blast furnace that from the best American coals the retort ovens will produce coke of equal value in the furnace to the best beehive product from the same coal, and that although retort coke from inferior coal may bring a lower price in the market than the best beehive coke, yet it is in most cases a better, and at any rate as good an article as would be produced in a beehive oven from the same coal.

Of course there still remains in the minds of many much of the old prejudice against the product of the new ovens, but the demonstration has been made, and the past two years can record a great step forward in American metallurgy. Beside the pioneers who are actually using the coke, a considerable number of other leading iron producers of the country either have ovens under construction or are in active negotiation for plants of sufficient capacity to supply their full requirements. Beside the 280 ovens now in operation, there are about 200 more nearing completion, while plans are being made for the doubling of several plants now in operation.

When we look to Great Britain we find that the last two years have produced quite a different state of affairs there as well, and there are now about 220 Semet-Solvay ovens in operation, beside plants of the Huessner and other types.

In France and Belgium nearly 300 Semet-Solvay ovens were put in operation during 1897, practically to the exclusion of other types. In Germany, on the other hand, the Otto-Hoffmann system continues pre-eminent. It is worthy of note that the Otto-Hoffmann or vertical flue system has proved such a favorite in Germany that there are in that country only about 100 each of the Huessner and Semet-Solvay types; while on the other hand in England, France, and Belgium the Semet-Solvay and other horizontal flue ovens have practically the entire field. For a description of the various types of by-product ovens, the reader is referred to the paper on the subject in Vol. IV. of THE MINERAL INDUSTRY.

Among the notes of progress made since that article appeared is the account of a radical modification of the Otto-Hoffmann type that has been brought out within the last 18 months in Germany, a description of which is given in the German patent No. 88,200, and also in Dr. Lunge's article in Vol. V. of THE MINERAL INDUSTRY. In this improvement one important feature of the former Otto-Hoffmann system is entirely abandoned, namely the regenerators. The air is heated hardly at all, and burns the gas delivered by a series of Bunsen burners distributed at each side of the oven under the vertical flues. By this means the former tendency toward an unequal distribution of the heat through the numerous small flues is reduced, and the coal is coked more evenly.

With the abandonment of the regenerators there remains only the direction of the flow of the gases to distinguish the two types of ovens from each other. It is the argument of the advocates of the vertical flue oven that the gases should travel by the shortest path through the flues adjacent to the coking chamber, in order that there may be the least possible difference in the tension of the gas in the various parts of the flue, thereby making it easier to keep an accurate balance of pressures in the flues and in the coking chamber; and preventing the leaking of the gas through the cracks of the flue walls, to or from the coke, and the loss of by-products. The new Otto oven was designed with this point in view, and the patentees claim that it shows a distinct improvement in this respect.

In what may be called the standard design of the Otto oven, in which regenerators are used, the path of the gases is upward in half of the thirty odd vertical flues by which the oven is heated, and downward in the other half. As the air and gas for the combustion enter under pressure on the one side and are removed by the chimney draft on the other, with the complications of the ascensional force of the hot gases acting contrary to the retardation by friction on the ascending side and with it on the descending, and the reversal of all the conditions at each change of the regenerators, the problem of maintaining a balance of pressure between the flues and the oven at the different levels becomes a complex one.

In the new Otto design the travel of the gases is much simplified. After mingling at the burners they rise directly through the vertical flues, and uniting in a horizontal flue at the top are led off to the chimney. Here the relations of the pressures of the gases in the oven and the flues seem to approach those existing in the horizontal flue oven.

In the development of this latter type it has been realized that notwithstanding the most careful construction and operation, a retort oven cannot be perfectly sealed, and that it is in fact in communication with the outside air. Too strong suction from the exhauster will draw air into the oven, and too little will force the gases out through the ends of the oven, to say nothing of the flue walls.

Since the coking chamber is in communication with the outside air, it is apparent that at varying heights from the floor of the oven the tension of the gases varies proportionately, the greatest pressure being at the top. This difference of pressure is practically illustrated by the fact that when the exhauster is run a little too slowly, thereby increasing the pressure in the coking chamber, smoke always appears first from the top of the oven, and can only be forced from the bottom by a further increase of pressure.

It is therefore plain that to prevent the passage of the gases between the coking chamber and the flue, and the attendant loss of by-products, not only must the tension of the gases in the flue be the same as that in the oven, but it must vary in different portions of the flue to correspond with the density in adjacent parts of the coking chamber. In the Semet-Solvay oven, for example, the designers state that the most careful attention has been given to proportioning the flues and the admissions of gas and air, with the result that as the gases travel through the flues they are at all times, from the point of admission until they reach the chimney flue, at the same relative tension as the gases in the coking chamber at the same level or distance above the oven floor. It then only remains to adjust the balance between the flue and the oven by proper regulation of the chimney damper and the exhauster. As intimated above, if the gases produced by the distillation are exhausted too rapidly from the ovens, air is drawn into the coking chamber, resulting in a partial combustion of the products of distillation, which is immediately made evident by the appearance of an undue amount of nitrogen in the gas and a reduced yield of by-products. Too much pressure in the oven of course results in an escape of the valuable gases into the flues and to the chimney.

The perfect control of the pressures in the flues and coking chamber of the Semet-Solvay oven permits the production of a gas containing but a trifling amount of nitrogen, while the escape of gas from the oven to the flues is an unusual occurrence. The arrangement of the flues permits the immediate detection and repair of such a leak, should it occur. As a result the greatest possible yield of by-products is secured, while the construction and operation of the plant remain very simple.

In the new Otto oven the burning gases travel only about 7 ft. in contact with the side of the coking chamber, and there being no regenerators to absorb the heat, there remains a large amount of heat available for raising steam, for which there is usually a demand about the German plants, and there is therefore a full utilization of the heat from the additional amount of gas the new oven would naturally require.

In American practice the amount of gas remaining in excess of that required for the operation of the ovens is frequently a matter of much interest, for under our conditions it is often available for purposes where it has a special value far beyond that of coal of equivalent theoretical heating value. So much attention has been given in this country to the use of gas as a fuel that a consideration of this by-product somewhat at length should be of interest.

Since the early attempts in France to supply part of the gas for lighting the city of Paris with the surplus from retort ovens, but comparatively little use of the gas has been made on the continent beyond the firing of the ovens and the raising of steam for the operation of the plant, raising coal from near-by pits, etc. In America, however, the familiarity with the use of natural gas has brought out many inquiries from the public as to the possibility of the use of the surplus gas from the ovens for purposes where it has much greater value than for the raising of steam, which is an application of the gas from which probably the lowest efficiency is realized. The gas from the plants now in operation has been applied to a variety of uses, and with decided success, and it is now in use for lighting industrial plants, operating gas engines, heating, annealing, and other furnaces, as well as divers other applications, in all of which it proves as acceptable as the natural gas now so rapidly disappearing.

Although carburetted water gas has obtained such a prominent place in America as an illuminant, yet the gas men were quick to note the advent of the newcomer, and there has been a great deal of discussion as to the availability of this product of the by-product ovens in the lighting field, and also as a solution of the much-discussed problem of "fuel gas" for domestic consumption.

The essential differences between ordinary bench gas and coke-oven gas are not great. The hydrogen is lower and the methane higher in the former, and the illuminants are somewhat greater, so that the illuminating power of coke-oven gas would probably not be more than from 10 to 12 candles. The calorific value of the two gases does not materially differ.

During the discussion of a valuable and interesting paper on the subject of fuel gas for domestic purposes, which was published in our journals during the past summer, it was stated by an authority on gas lighting that the gas most likely to fulfill the very trying conditions of a commercially successful domestic fuel was one rich in hydrocarbons, and of low candle power. Although much effort and capital have been spent in an attempt to produce a suitable gas for this purpose, nothing has so far been obtained which in any way approaches the product of the by-product oven in fulfilling the severe commercial and technical conditions required of this service. When used in incandescent burners the light produced is entirely satisfactory, and of equal brilliancy with that from good coal gas. Whether the ordinary methods of enrichment can overcome the low candle power obtained when used in ordinary burners, at a cost which will make its sale commercially possible in competition with high candle power carburetted water gas, for example, remains to be demonstrated.

It has recently been shown that a gas of sufficiently high candle power to satisfy the commercial standards may be obtained from the coke ovens without resorting to enrichment, and experiments are now under way to develop this process more perfectly. In brief it is as follows:

It is well known that in the distillation of hydrocarbons the first products after the water vapor are the light oils and illuminants, including the marsh gas. As the distillation proceeds these gases become less in quantity, and are replaced by hydrogen, carbonic oxide, and other non-luminous gases. By the separation of the products of the first part of the distillation from those coming off toward the completion of the process, gas of almost any desired composition, and of a high candle power, may readily be obtained without increasing the cost of the operation. The richer gases may be retained for sale, and those weak in illuminants used for heating the ovens. This will remove the necessity of the excessive expense now incurred for enrichment, and the difficulties hitherto attending the supply of gas for domestic fuel, together with gas for illumination, will have disappeared.

As the demand for fuel gas increases, producer gas may be substituted for heating the ovens and the second grade gas sold as a fuel. But the handling and delivery through the streets of two qualities of gas is both difficult and costly. All investigations of the problem of the supply of gas for domestic light and fuel, point toward the use of one gas, delivered through one service main, measured by one meter, and used by the consumer as either light or fuel, as the ideal solution of the much-vexed "fuel gas" problem. Does not the product of the by-product oven seem to be in line with this development of the problem? The incandescent gas burners are improving in perfection and simplicity, and demand only gas of good calorific value, not high candle power.

Dr. Lunge has described so fully the most modern treatment of the other by-products from the retort oven in his very interesting article in THE MINERAL INDUSTRY, Vol. V., pp. 185–196, that there is nothing more to be said, and the reader is referred to that article as the latest information on the subject.

With the increase in the number of ovens the question naturally arises as to the market for the quantities of tar, ammonia, etc., that will be produced during the next few years at the present rate of increase. So far America has done but little in the field of tar distillation, and the utilization of the derivatives of this complex substance. More attention is being given to this subject, however, and we may hope that as the supply of crude material increases the demand may grow with it, as has been the case with Germany, for example, where we find that although in the last 10 years the product of between 2,000 and 3,000 by-product ovens has been added to the supply of tar, the depressions in the price have been temporary, the demand following the increased supply in a series of waves, as it were. The importations of pitch into this country have been very large in the past, and as for the lighter distillates, we are only just beginning to manufacture them into the many products heretofore imported from Europe.

It has been suggested that we may hope for the same results in the market for sulphate of ammonia. Although prophecies made a few years ago by competent authorities were not maintained, and the price of sulphate has gone below the figure then given as one which would open wide the market for it as a fertilizer, yet it is stated by those who have studied the matter that as the supply of sulphate increases largely and becomes permanent, there will shortly follow a great increase in consumption when the fertilizer manufacturers realize that the supply can be permanently depended upon as a source of nitrogen.

As Dr. Lunge has shown in his valuable statistical table, in the article above referred to, the price of sulphate did not fall materially as a whole from 1885 to 1894, although during this time about 2,000 by-product ovens were put in operation, and this fact has been regarded as a very hopeful one for the future of the sulphate business in this country. There is no question that the demand for artificial fertilizers is growing very rapidly, and must grow enormously as our new lands become exhausted. Moreover, the farmers are learning from the government experimenters and from their own experience the value of the artificial manures, all of which should tend very much to secure a permanent market at a fairly uniform price for this product of the by-product oven.

Following is a statement of the number of by-product ovens in operation in the United States and Canada each year since the first plant was started, with the amounts of coke, tar, and ammonia produced. The figures are as complete as it was possible to get them, but are somewhat too low for the last year, one producer not having made returns.

	1893.	1894.	1895.	1896.	1897.
Average number of ovens in operation............	12	12	12	25	140
Tons of coke made..................................	12,891	17,581	18,521	19,600	205,004
Pounds of tar produced............................	651,117	917,230	869,040	1,807,108	26,607,249
Pounds of ammonia (as sulphate) produced........	156,784	309,885	325,863	454,174	4,772,112

The number of ovens now under construction is 690.

THE MANUFACTURE OF COKE IN SOUTH WALES.

THE old type of coke oven in South Wales was of almost rectangular form and had a width varying from 5 ft. to 6 ft., a length of 14 ft., and a height inside to the crown of the arch of 5 ft. 6 in. The Coppée oven has been largely introduced within recent years with satisfactory results. In this oven the charge is usually about 3 to 5 tons and the time of coking 24 hours. Each oven produces 10 to 20 tons of coke weekly, According to Prof. Galloway, the most recent form of this oven is a chamber about 30 ft. long, 6½ ft. high, 21 in. wide at one end and 26 in. at the other. It is arched over on the top and covered with 2 ft. or more of non-conducting material. It has four charging openings in the top. Fifty or more ovens are built side by side in a block. At the back of each range of ovens there is a line of rails, on which is placed a car with apparatus for mechanically pushing the coke out of each oven.

The charge of an oven is five tons, the time occupied in coking two days, and the quantity of marketable coke produced is about 70% of the weight of the coal which is filled into the oven. Prof. Galloway estimates that if the market price of coal at the pit is 3s. per ton, and if 6% of ash is removed by washing, it will then cost 3s. 2.3d., plus 1d. per ton, the cost of washing, making its total cost 3s. 3.3d. But each ton of washed coal produces only 70% of salable coke, so that the coal required to make a ton of coke costs 4s. 8.01d. A ton of salable coke therefore costs altogether: Coal, 4s. 8.01d.; labor, stores, etc., 1s. 2.50d.; total, 5s. 10.51d. From this we have to deduct the value of the water evaporated in the boilers by the hot gases, viz., 1s. 0.75d., and the value of the breeze which may be neglected, leaving the total cost of the coke as 4s. 9.76d.

A coking oven of the size described, together with all its appurtenances, costs about £200, and produces 2.1 tons of coke per day—or, say, 700 tons of coke per annum. If 10% is charged for interest and depreciation (remembering that repairs have been already charged against the coke) this item amounts to 6.86d. per ton of coke, and the coke can be sold at 5s. 4.62d. without loss.

THE MANUFACTURE OF BRIQUETTES.

By PHILIP R. BJÖRLING.

THE manufacture of briquettes, or patent fuel, as it is frequently termed, and the export from Cardiff, in England, are rapidly extending. In France, Germany, and Belgium they are in great demand, and the yearly output is growing correspondingly. The reasons for previous lack of enterprise in this direction are probably the great expense in commencing the manufacture, the prejudice existing against their adoption, and the bad fuel that has found its way into the market through experimental companies which have used poor and inappropriate material and bond.

The bond is one of the principle features upon which the fuel depends, the qualities which a good briquette should possess being: (1) They should be homogeneous, sonorous, and nearly smokeless; (2) the breakage in transportation must not exceed 5%; (3) the weight of each briquette should not exceed 1 to 2½ lb., so that they may be used handily and without breakage in feeding the furnace; (4) the average specific gravity should be at least 1.5; (5) they must not be hygroscopic—the moisture contained in them should not exceed 5%, nor the ash more than 10%; (6) they must be easy to kindle, burn with a lively and practically smokeless flame, and must not fall to pieces in the fire; (7) their steaming power must be approximately equal to that of good steam coal.

Bonds.—A great variety of bonds have been tried, but none has so far been found as good as pitch, in cold or temperate climates; but a great difficulty has been experienced in dealing with pitch, especially soft pitch, in very warm regions. There is no doubt that if anybody could find a cheaper substitute for pitch, having the same good qualities, he would soon make his fortune. The qualities which the bond must possess are: (1) It must be ashless and smokeless; (2) must prevent the briquettes from being injured by exposure to the weather; (3) must prevent them from breaking during transportation.

Pitch is used in the proportion of from 8 to 10 parts by weight to 100 parts of coal. Sometimes, according to the nature of the coal, as little as 5% of pitch may be used. When tar and pitch are used together 1% of tar to 4% of pitch has made as good briquettes as 7% of pitch alone. Briquettes have been made with great success at the Paris Gas Works from 10 parts of pitch mixed with 100 parts of coke refuse or breeze. At the Perrache Gas Works, at Lyons, the coke refuse was mixed with 7% of pitch. The coke or breeze was in each case disintegrated and well washed before mixing.

On the continent of Europe brown coal is most frequently used for briquette making, but they are also made of coke. Many experiments have been made to agglomerate sawdust and small coal simply by heat and pressure, but this has been found impossible with English coal. Briquettes made with lime and meal mixed in certain proportions are easily worked, and in hot climates are very cheap. The briquettes are not so valuable as those made with pitch as a bond, but where small coal has to be thrown away otherwise, and where the briquettes can be used with a strong draft, they have proved successful. The best way is to burn them half and half with large coal. It is not so much the pressing which contributes to the lime and meal process as the manipulation of the materials used as bond. When lime is used by itself as a bond 7 to 10 parts are required to 100 parts of coal. When lime and meal are employed 2 to 6% of the former is mixed with 2 to 3% of the latter to each ton (2,240 lb.) of coal, the percentage varying with the quality and nature of the coal employed.

Shape of Briquettes.—Briquettes are made in various shapes, each of which has advantages—such as rectangular (like ordinary building brick), cylindrical, egg-shaped, and ball-shaped. Rectangular-shaped pack closely in transport, but the egg-shaped and ball-shaped are best in the fire, because they leave space between them for the air to pass, which improves the combustion; they also have the advantage of not possessing any sharp edges, and consequently are less subject to waste in transportation. Ball-shaped briquettes, however, are obviously very bad for stacking.

The sizes of rectangular briquettes vary from 5×5×2 in. to 12½×8½×4½ in.; they weigh from 2 to 24 lb. The ovoids and ball-shaped vary from 1 to 2½ lb. in weight.

Drying.—In the manufacture of briquettes the coal must first be thoroughly cleaned and separated from all extraneous matter; the cleaner the coal the higher will be the value of the briquettes. In Great Britain until very recently the coal has been simply screened, but now the washing process is becoming more general. After the washing the coal must be drained before crushing. This is done in various ways, the simplest being to leave it in a large hopper or bunker till it has parted with from 10 to 20% of the water, which takes about 24 hours. Centrifugal machines have been used at many places in Germany, running at a speed of 300 revolutions per minute. They have been tried experimentally in England, but it has been found that with all materials of low value in proportion to weight, although the centrifugal machines dry them very well and quickly, the cost of handling is out of proportion to the work done.

In some instances drying furnaces are employed, these being especially recommended for coal that is of a semi-bituminous nature, because it becomes slightly softened, and in such cases the pitch is introduced either immediately before or after the coal has passed through the furnace, thus reducing the quantity of pitch required. One of these dryers will be described later in this article.

Disintegrating.—After the coal has been dried it must be disintegrated, and it is very important that the coal should be reduced to a uniform size. For the production of briquettes for domestic purposes it is advisable to grind the coal somewhat fine, as it certainly makes a better-looking article, but to make the best briquette for burning, coal passed through a mesh of between $\frac{3}{16}$ and $\frac{1}{8}$ in. is quite small enough. The French practice is from 5 to 7 mm. Another authority states that the most satisfactory results are obtained from coal of an even size of $\frac{1}{8}$ in., or from the slime of slack. However, the finer the coal is disintegrated the greater is the amount of pitch required to agglomerate it; on the other hand there ought to be a certain amount of fine powder to fill the interstices between the larger particles.

The coal and pitch, or any other binding material, must be carefully mixed, because it is of the utmost importance that the briquette should be of a uniform texture. The mixing of the coal and pitch is accomplished with the pitch, molten or dry, but in either case it is finished in a pug-mill or mixer immediately before the material is introduced into the press.

Wet Pitch Process.—When the wet or melted pitch process is employed the pitch is commonly mixed with about 15% of tar; but in some places as much as 30% of tar is added. At the Blanzy colliery the pitch is melted in cylindrical pans 5 ft. 9 in. in diameter and 14 ft. high, the inner casing inclosing a revolving worm of 1 ft. 9½ in. diameter, so arranged that the pitch already liquified may be kept in motion in order to promote the fusion of the remainder. The pitch is broken in a mill or cracker above the cylinder, and the tar is poured in by hand measures. The annular space between the two casings is supplied with steam, the heat of which effects the complete fusion of a charge of 6 tons in six to eight hours, the melted pitch being tapped from the bottom of the pan.

At the works of the Paris, Lyons & Mediterranean Railway, the pitch is melted in large wrought-iron vessels 19 ft. 6 in. long, 3 ft. 3 in. wide, and 6 ft. 6 in. deep, slightly inclined toward the tapping hole, and heated by a coal fire. From 2 to 2½ tons of tar are first charged into the vessel to prevent the latter from being burned; 6½ to 7 tons of pitch are then added, and the whole is melted in about 12 hours.

At the Rochebelle mines the fusion of the pitch is effected in a vertical cylinder about the axis of which a shaft, fitted with knives or beaters, is rotated, the waste heat of a drying furnace being utilized as a melting agent. The capacity of the cylinder is 2 tons, 10 to 12% of the charge being tar. After about four hours the mixture is sufficiently melted to be run off into another receiver.

Dry Pitch Process.—In cases where the dry pitch process has been adopted the pitch is broken in a small mill or cracker, then added in suitable quantity to the coal, and the mixture is passed through a disintegrator. An intimate blending of the two ingredients is thus insured. The mixture, whether it has been heated in a furnace or not, is finally heated in a pug-mill or other apparatus to render it perfectly pasty. The pug-mills, or heaters, are of various designs, but consist, as a rule, of a vertical cylinder made of wrought-iron plates, 2 ft. 6 in. to 3 ft. 6 in. diameter, and 6 to 8 ft. high, containing a central shaft which makes from 20 to 25 revolutions per minute, and carries arms designed to turn over the paste and force it downward. The heat is obtained either by a steam-jacket, which is called the "dry-heat system," by direct injection of the steam into the mixture, which is called the "wot-steam process," or by a combination of the two.

The temperature of the paste in the molds of the press should not be lower than 70° C. or 158° F., nor higher than 90° C. or 194° F. The amount of pitch required as binding material varies with its quality, the character and quality of the coal, and its state of division, and with other circumstances which cannot well be determined except by experiment. On the continent of Europe the average is from 6 to 9%, and in Great Britain 8 to 10%. The average amount of water present in the paste should not be less than 3%, and not more than 5%.

Pitch Crackers and Mills.—The original cracker used by M. Bietrix is similar to the one illustrated in Fig. 1, as adopted by the Uskside Engineering Co., Newport, Monmouthshire, South Wales, with the exception of the regulating or adjusting gear. *A* is the body of the mill, resting on two beams of wood, and provided on the inside periphery with teeth. *B* is the cracker, which consists of a cast-iron cone, furnished with teeth, secured to the spindle *C*, and rotated by the bevel-gear *D*, and the fast and loose pulleys *E*. The teeth at the top of the cone and body are coarse; the lower part consists of fine hard-steel teeth, which can be removed when worn out and replaced by new ones. The bevel-wheel on the upright shaft is made to slide on it, so that the size to which the pitch has

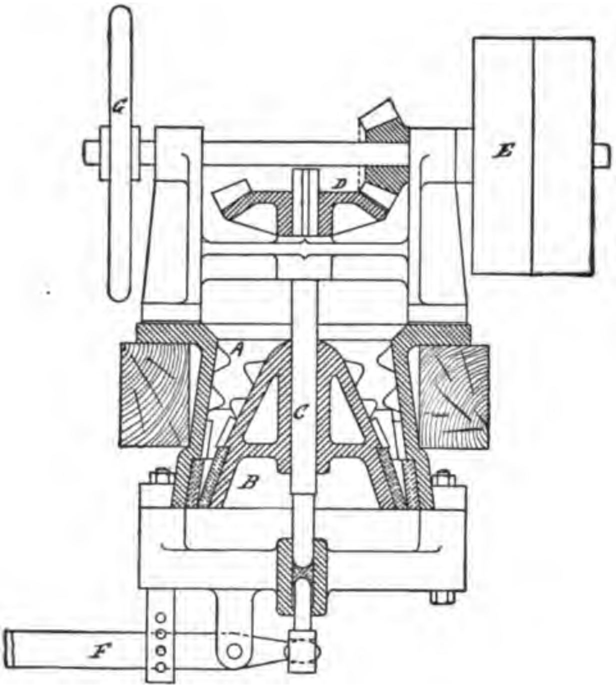

Fig. 1.

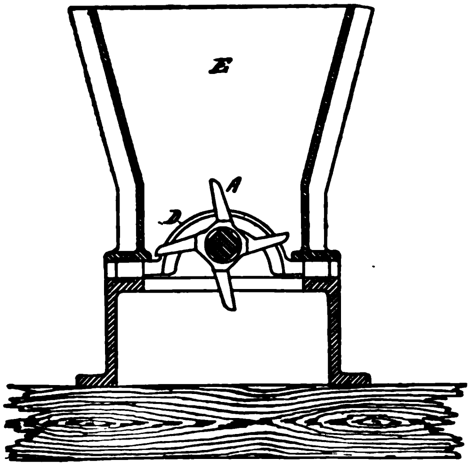

Fig. 2.

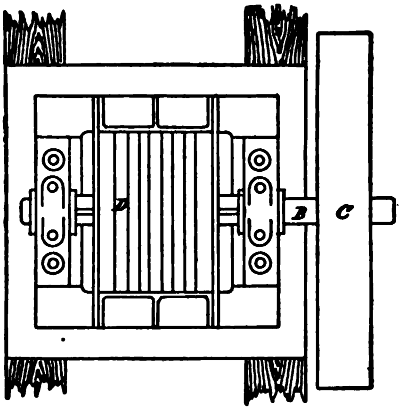

Fig. 3.

to be broken can be regulated by means of the lever *F*, which is provided with a sliding weight. *G* is a hand-wheel, by means of which the mill can be worked by hand if necessary.

The pitch mill adopted by Robert Middleton and Yeadon, Son & Co., both of Leeds, England, is illustrated in sectional end view in Fig. 2, plan in Fig. 3, and sectional elevation in Fig. 4. This mill consists of five knives *A*, secured on the shaft *B*, which is rotated by the belt pulley *C;* between each of these knives is secured a scraper bar *D*, forming as it were a grid, the distance between the bars being the size the pitch is required to be broken. The pitch is poured into the hopper *E*, broken by the knives and pulled through the grid. This is a very good arrangement, especially when the pitch is rather soft, as in the pitch cracker previously described the pitch is liable to clog at the bottom of the inside cone and the body of the cracker, which cannot occur in this mill. The cracked or broken pitch is allowed to fall through into a hopper secured to the two beams *F* and *F*.

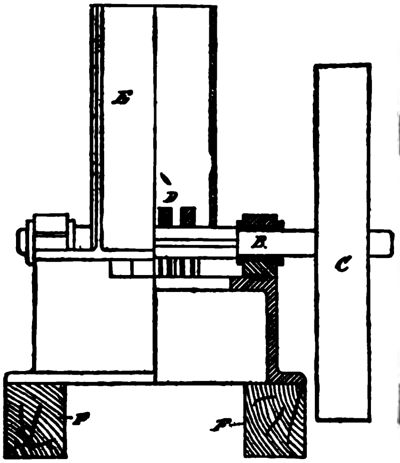

FIG. 4.

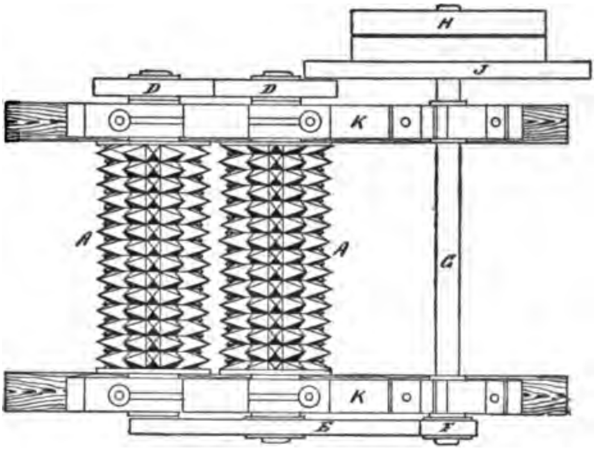

FIG. 6.

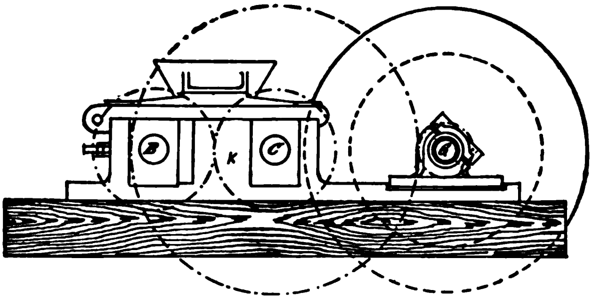

FIG. 5.

The pitch mill illustrated in elevation in Fig. 5, and in plan in Fig. 6, is the invention of Charles E. Hall, of Sheffield, England, and is termed by him the "Diamond Mill," because the teeth on the rolls are diamond pointed. This mill will never clog. It consists of a series of cast-steel rings *A*, threaded on the two shafts *B* and *C*. The rings are provided with diamond-shaped teeth furnished with sharp points and cutting edges. The shafts *B* and *C* are connected by the spur-wheels *D*, and the shaft *C* is driven by means of the spur-wheel *E* and pinion *F*, the latter being keyed to the shaft *G*, which is driven by the fast and loose pulleys *H*; the driving shaft is also provided with a fly-wheel *J*. The three shafts are carried on two side brackets *K* and *K*, which are secured to timber.

Measuring Machine.—In some cases the pitch is added to the small coal or coal dust by means of a hand measure, but the better way is to use a measuring machine. One of these machines, patented by Robert Middleton, is illustrated in sectional elevation (Fig. 7), and half transverse section (Fig. 8); it acts both as a mixer and measurer. The small coal is introduced through the hopper *A*, and the cracked pitch through the hopper *B*. *C* is a horizontal cylinder with a circular bottom and an open top, having a plate at each end with boss for carrying the shaft. Attached to this shaft is a number of adjustable knives or blades which can be altered in their pitch as may be desired. *E* is an arched bridge of the same radius as the bottom of the cylinder, and secured to it just behind the feeding hopper *A*. The upper cylinder *F* is fitted up in the same manner as the lower cylinder, the only difference being the size. The action of the measurer is as follows: The cracked pitch is delivered continuously into the hopper *B*, whence it falls through the opening *G* into the cylinder *C*. The speed of the shaft *H* is regulated by the step or cone pulleys *J J*, from the shaft *K*, and the angle at which the adjustable knives or blades are set regulates the speed and quantity of pitch passing along; to regulate this still further the bridge *L*, which with the bottom of the cylinder forms a complete circle, prevents the passage of more pitch than can go through the area of that circle. The coal is delivered continuously into the hopper *A*, and is carried forward by the adjustable knives *M* through the bridge *E*, where it meets the pitch, and the coal and pitch are thus mixed and carried forward continuously by the knives to the outlet *O*. The mixer is driven by shaft and gearing at *P*. From the outlet the mixture is allowed to pass through a hopper into the disintegrator.

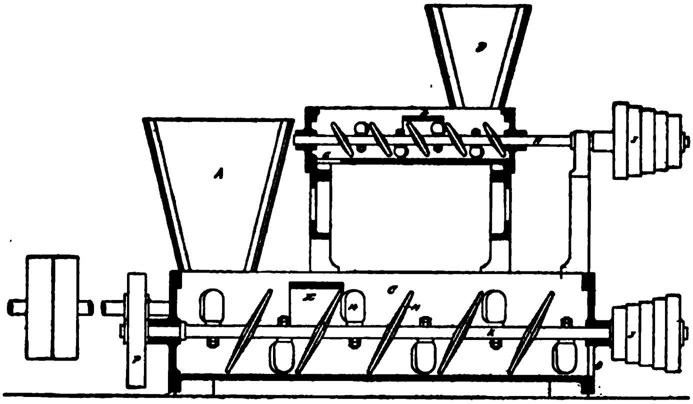

FIG. 7.

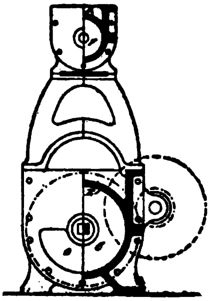

FIG. 8.

Sometimes, when no measurer is used, the pitch elevator is driven by a belt and step or cone pulleys, by means of which the speed of the buckets can be regulated, so that the elevator delivers the required quantity of pitch.

Drying Furnaces.—A great variety of dryers have been experimented with, but in this article I shall confine myself to the one which is considered the best. It is called "Bietrix Direct-drying Furnace," and appears to be a great favorite in France. Fig. 9 is a sectional elevation, and Fig. 10 a plan of one of these furnaces. It consists of a circular brick chamber *A*, the crown of which is strengthened by a wrought-iron casing. A vertical shaft *C* passes through this chamber, and is held at the top by a cross-bracket, and at the bottom is supported by an adjustable foot-step *G*. This shaft has keyed on it a table *B*, and above the table it is fitted with knives *D*, which work in a cast-iron cylinder *E*, to which the top bearing for the shaft is secured. The lower end of the shaft passes through the brickwork, and is fitted with a bevel-wheel driven in such a manner that the furnace delivers just sufficient material to supply the briquette press. At one side of the chamber *A*, is the firebox *H*, and at the opposite side are two cast-iron flues or ports for the outgoing gases; these gases pass under the table through the flue into the chimney. In the walls of the chamber there are six holes, through four of which are inserted radial arms, supported at the other end by the cylinder *E*, and fitted with rakes, which continually turn the coal and spread it over the table. The fifth opening has two adjustable bars *J*, placed side by side, one fixed and the other movable, connected by a series of guiding plates, the inclination of which may be varied in either direction by adjusting the second bar; in so doing the coal can be gradually directed from the center to the circumference, and consequently the time the coal remains in the furnace may be regulated with great nicety. Scrapers, set at any inclination by an external crank-handle, draw the coal from the center of the table within the scope of the guide-blades. The coal when dried is withdrawn from the furnace through the sixth opening, and is conveyed thence to the press either by worms or elevators; the openings are closed by doors *K*, which also serve as sight-holes

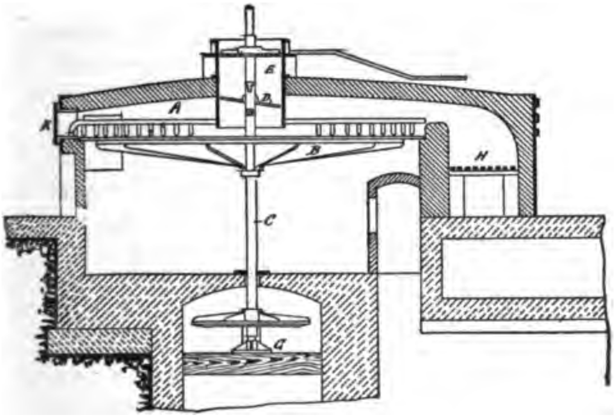

FIG. 9.

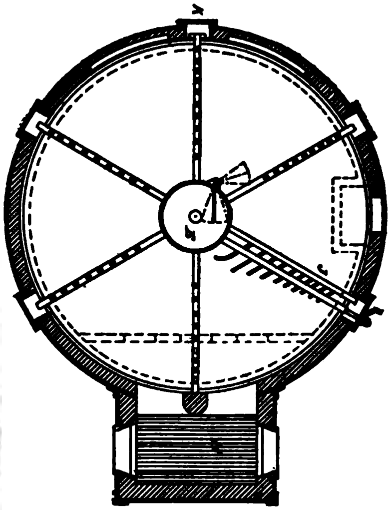

FIG. 10.

when necessary. The coal is prevented from passing over the edges of the table by guides fixed on the periphery of the chamber.

The usual speed of the table is three to four revolutions per minute. The repairs are small, because the roof-walls and table are uninjured by the heat. The temperature of the furnace varies from 212° to 392° F., or 100° to 200° C., but the continued turning over of the coal and the influence of the steam generated prevent the ignition of the coal or the loss of gases. This furnace is continuous and highly efficient in action, automatic except for periodical firing, and economical in fuel consumption. If properly broken pitch is mixed with the coal before the latter is charged into the furnace the two substances become intimately associated, the temperature of the paste on leaving the table being from 176° to 203° F., or 80° to 95° C.

Briquette Presses.—There are two distinct types of pressing machines—single compression and double compression. Much has been said in favor of each class; some say that the briquette cannot be properly compressed unless it is compressed from both sides at the same time; other authorities say it ought to be compressed partially on one side first and the compression finished from the other side; while other engineers are of opinion that it is sufficient to apply the pressure on one side only. The principal claim for the double compression is that the briquettes can be well rounded at all corners, whereby breakage in transit is prevented. The claim for single compression is that every mold can be arranged to carry a corresponding piston with it, so that accuracy of movement in the table is not necessary, an accuracy which is very difficult to obtain in consequence of the nature of the manufacture, where particles of dirt get into the pushing arrangement and push the table forward a shade beyond where it ought to go.

Another undecided point in regard to the manufacture of briquettes is the pressure to which the paste ought to be subjected. In Germany and France the pressure varies from about 1,008 to 1,120 lb. per sq. in. Arthur J. Stevens of the Uskside Engineering Co. advocates 1,680 lb. per sq. in.; and Robert Middleton and Yeadon, Son & Co. of Leeds, and Mr. Dumble of Texas, recommend a pressure of 4,480 lb. per sq. in. It appears to the writer that the pressure should be regulated according to the class of coal and the bond employed. If the coal is soft and large a light pressure will suffice; if a heavy pressure were used in such a case it would crush the coal too fine. If fine coal is used, or when meal and lime are employed for binding, or coal without any bond at all, the pressure should be greater. Light pressure can be used for molasses bond, or when a great amount of pitch is employed for agglomerating; therefore machines ought to be capable of adjustment as regards pressure, and the pressure most suitable for the case in hand should be adopted.

There are two distinct classes of presses for the manufacture of briquettes or patent fuel of any shape or size, namely: (1) Those for pressing without bond; and (2) those for pressing with bond. The first class comprises two types —wet pressing and dry pressing.

The presses used for wet pressing briquettes are similar to ordinary brick machines. They consist of two pairs of rollers through which the coal is made to pass; from these it gravitates into a pug-mill, which is for a short distance made parallel; further on toward the outlet mold it is made of such a taper that

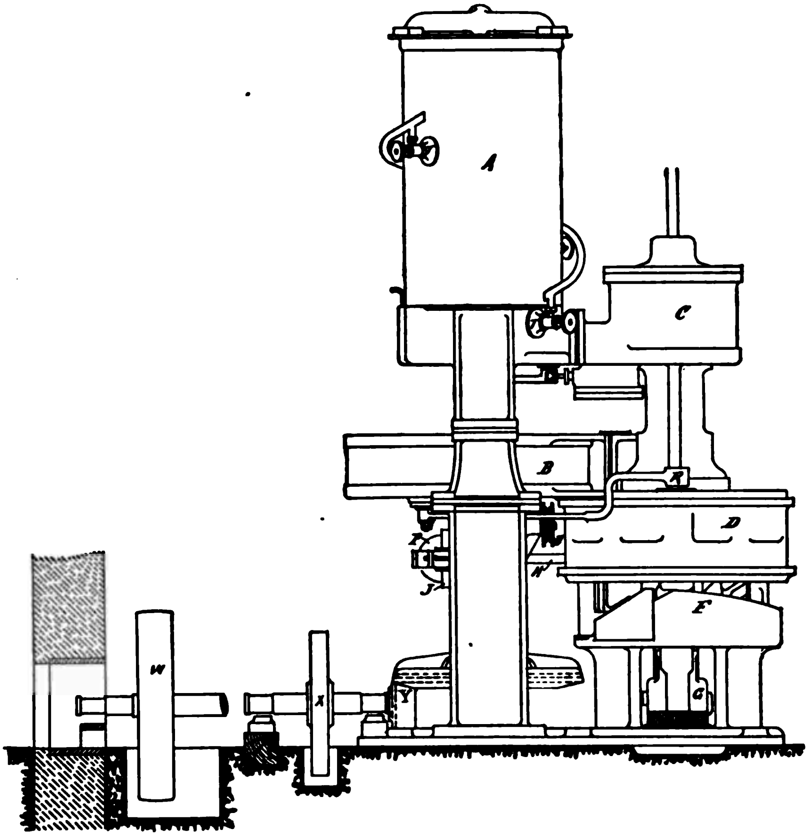

FIG. 11.

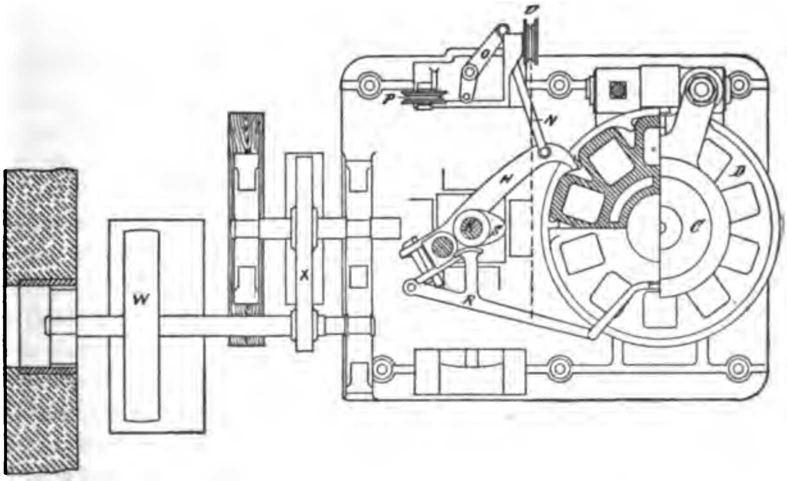

FIG. 12.

the small coal is subjected to a pressure of 75 lb. per sq. in. Through the whole length of the pug-mill runs a shaft with a continuous worm for bringing the coal forward toward the mold. The pressed coals as they are forced out of the mold are cut into blocks on a table, and arranged on shelves in long open sheds, where they remain until they are dry, which on an average takes a week. When the briquettes first come out of the press they are 2½×4¾×8 in., and when they are dried they are 2¼×4½×7½ in. The weight when freshly made is 5 lb. each, and when dried 2½ lb. each.

The dry pressing process has been found applicable to certain kinds of brown coal, and to those bituminous coals which are of a caking nature, in which the heat evolved by compression causes the bituminous matter to act as a bond. The best brown coal is found in Saxony and on the Rhine. For this purpose the coal must be partly dried; when it comes from the mine it contains 40 to 60% moisture, and the excess must be evaporated. This press, like the one previously described, is of the class called "open-form presses," and is generally known by the name "Exeter press." It consists of a hopper through which the dried coal is admitted into the press, and gravitates into the mold, which is made in four pieces of hardened steel. The mold is held together by a screw to give the proper tension to a retaining plate; this is effected by means of a hand-wheel, worm, and worm-wheel. A piston or pusher is actuated by a steam engine. When the pusher is withdrawn the proper amount of small coal enters the mold, and on the forward stroke the piston presses against the briquette left in the mold by the previous forward stroke. The piston has usually a stroke of 6 in., 3¾ in. of which is passed through without pressing. These presses make from 65 to 80 strokes per minute, each stroke producing one briquette at a pressure of about 2 to 2½ tons per sq. in.

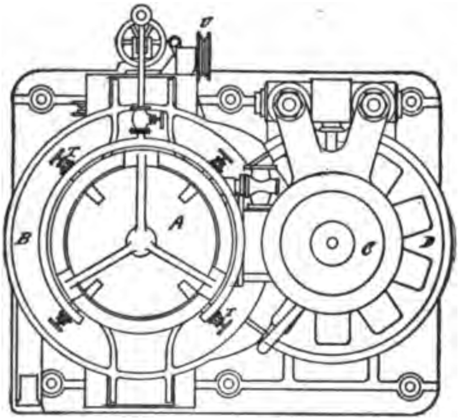

FIG. 13.

Of the presses for briquettes with bond the class of single compression machines may be illustrated by Arthur J. Stevens' press, manufactured by the Uskside Engineering Co. It is shown in side elevation (Fig. 11), part sectional plan (Fig. 12), elevational plan (Fig. 13), and sectional end view (Fig. 14). It is of the simple compression type, and fitted with horizontal molding table and vertical compression pistons, and is sometimes arranged to compress two briquettes at each stroke. *A* is the pug-mill or mixer; *B* the feeding pan; *C* the compressing steam cylinder; *D* the molding table, which is usually provided with 10 molds. The compression pistons *E* are supported by and slide upon the inclined plane *F*, and the molds, when filled with paste, rest on the lever G, which is connected by the vertical piston-rod with the steam piston, working in the steam cylinder *C*. The table is intermittently rotated by the pawl or ratchet *H*, engaging in recesses formed on the periphery of the molding table, its motion being obtained by the crank *J* on the vertical shaft *K*, which is in fixed relation to that of the piston in the steam cylinder. The slide valve of the steam cylinder, which is opened at the moment when each successive compressor-piston rests upon the lever *G*, is worked horizontally by an eccentric keyed on the upright shaft *K*. By this arrangement the wear of the dies and pistons is minimized. The piston-and lever by their own weight come to rest on a wood buffer or block *L*. The ratchet or pawl *H* is always kept up to the periphery of the molding table by the rod *N*, bell-crank *O*, and chain and weight over the pulley *P*. The finished briquette is moved off the table by the pushing lever *R*, worked by the cam *S*, provided on the vertical shaft *K*, the lever being always pulled back to its position, ready for another briquette, by means of a chain and weight over the pully *U*. It will be seen that in this machine the pug-mill is

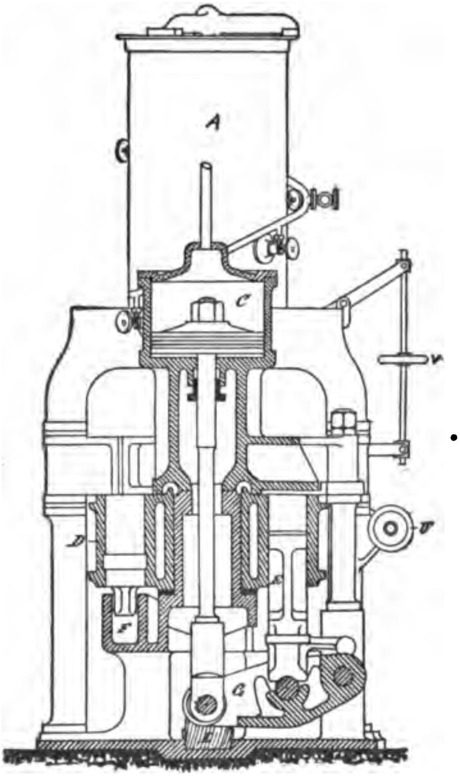

FIG. 14.

heated by four valves *T*, placed on different levels so as to more thoroughly heat the mixture than is the case when all the valves are on the same level. The outlet for the paste from the pug-mill is regulated by means of the screw and hand-

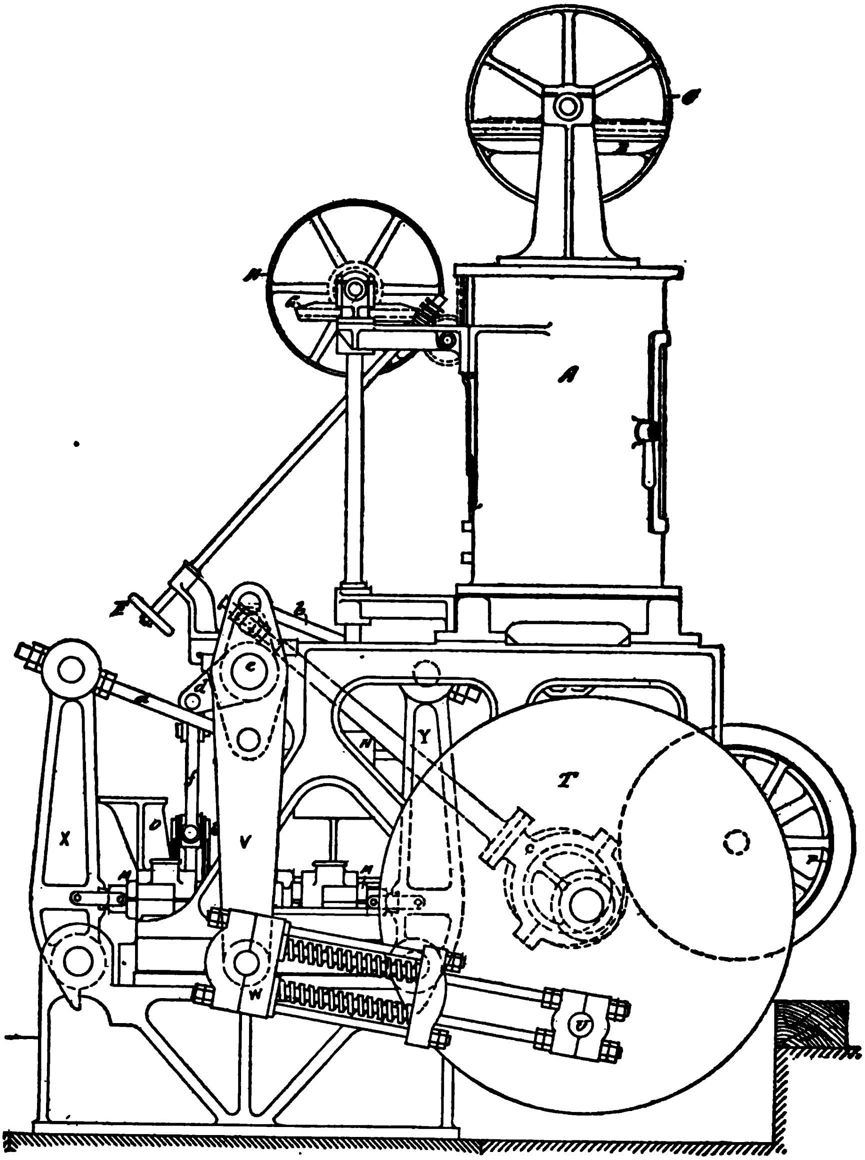

FIG. 15.

wheel *V*. The whole of the machinery is operated by the pulley *W*, a spur-wheel and pinion *X*, and a bevel-wheel and pinion *Y*.

Yeadon, Son & Co.'s double compression briquette press was the first briquette press designed with the pressure simultaneously applied on both sides. It is illustrated in side elevation (Fig. 15), end elevation (Fig. 16), elevational plan with pug-mill removed (Fig. 17), sectional elevation (Fig. 18), section showing pushing ram (Fig. 19), and side elevation showing the locking gear for the mold plate (Fig. 20). *A* is the pug-mill or mixer of the usual construction, the shaft being rotated by the bevel-wheel and pinion *B*, and the fast and loose pulley *C*. The paste is admitted into the feed-mill *D* through the opening *E*, which can be regulated by means of the hand-wheel *F*, worm, worm-wheel, rack

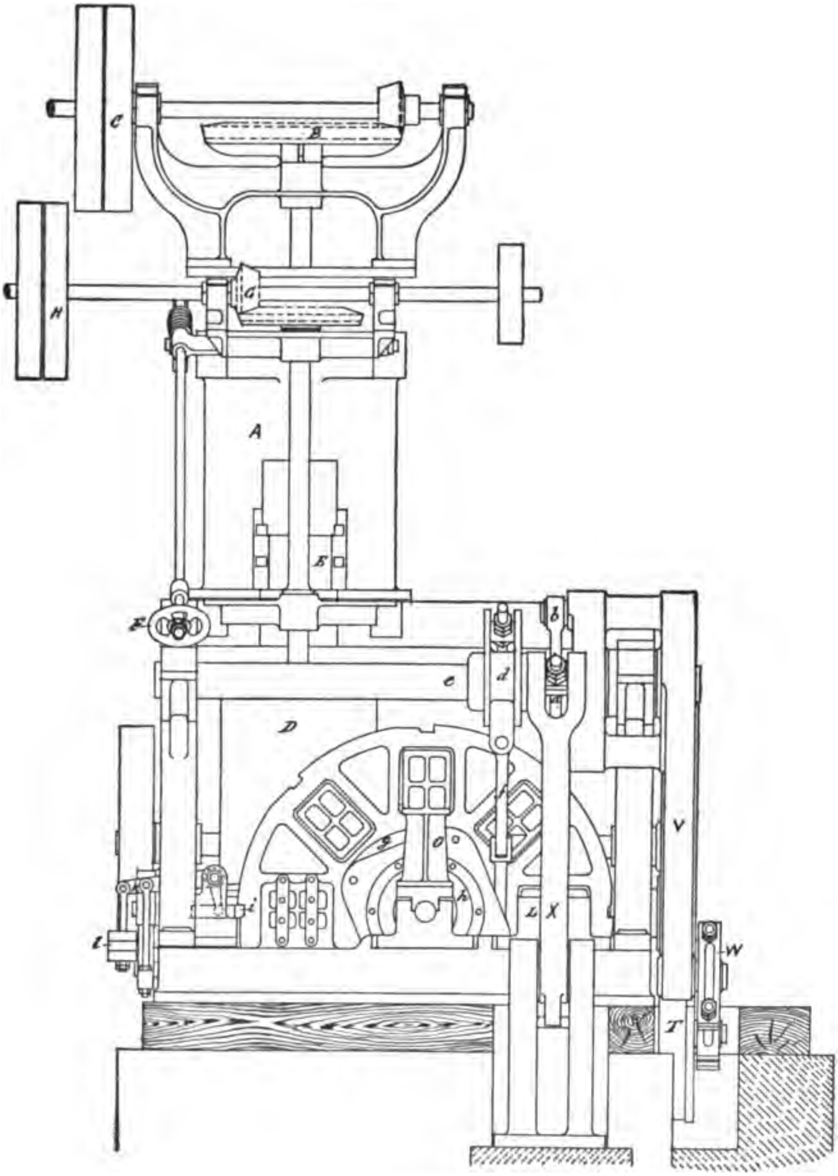

Fig. 16.

and pinion. The beaters in the feed-mill are rotated by means of the bevel-wheel and pinion *G* and fast and loose pulleys *H*. The paste is next charged into the mold by being forced tightly into it by the charging ram *J*, which is actuated by the slotted link *K*, the centers of which are so arranged as to give the charging ram a quick return motion. There is one advantage in the vertical mold plate over the horizontal molding table which should be pointed out, namely, that the charging ram is tightly forcing a charge from the bottom of the feed-mill *D* into the empty mold opposite to it, whereas in horizontal tables the material merely falls by gravitation into the molds, requiring a much longer stroke to compress it. The material being well filled into the molds by the charging ram, the pressing ram requires very little stroke (as compared with single compression presses) to compress the briquette, and the mold plate consequently need not be so thick. During the time this mold is being charged the paste in the mold *L* is compressed simultaneously by the two rams *M* and *M*; and the pushing-out ram *N* delivers the finished briquette through a spout resting on the bracket *O* on an endless carrier or band. The ram *N* is actuated by the lever *o*, and the cam motion *p*, which is secured to the main shaft.

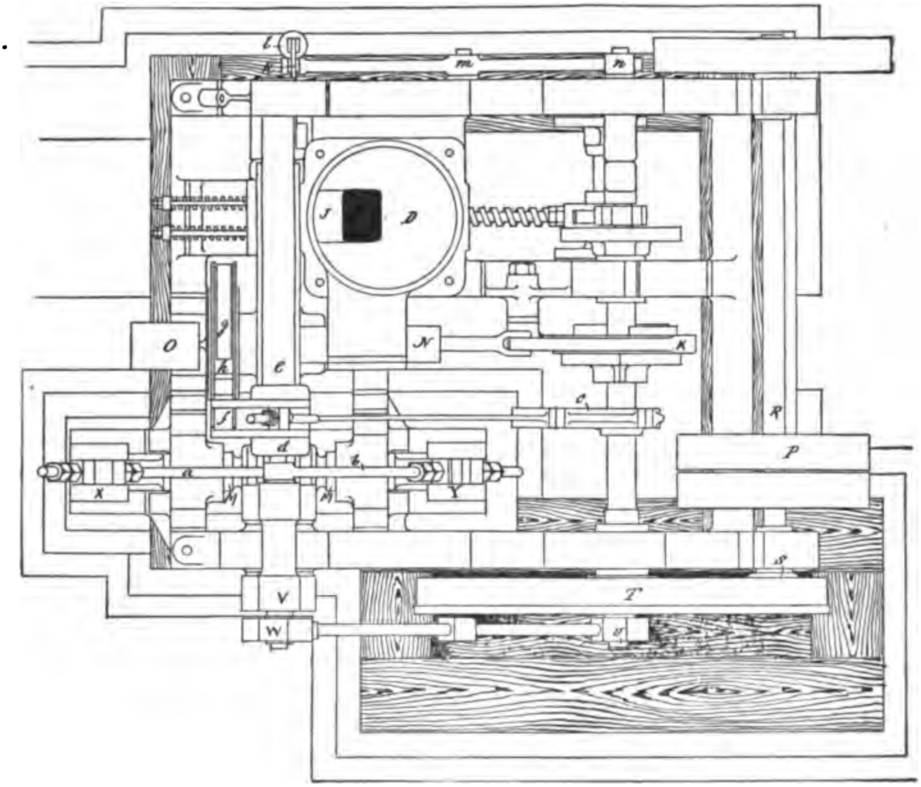

FIG. 17.

The compression is effected in the following manner: The machine is driven by the pulley *P*, which is keyed to the shaft *R*, at the end of which shaft is keyed a spur-pinion *S*, gearing into an internal spur ring cast on the fly-wheel or crank-disk *T*. This fly-wheel is fitted with a crank-pin *U*, coupled to the rocking lever *V* by the connecting-rod *W*. The rocking lever *V* is again connected to the vertical levers *X* and *Y* by the two adjustable rods *a* and *b*. The two compressing pistons *M* and *M* are connected to the vertical levers *X* and *Y* by means of links. This arrangement of compound levers and fly-wheel dispenses with the steam cylinder, which has been described in connection with the single compression presses. The pressure of 4,480 lb. per sq. in. of the surface of the briquette is exerted with comparatively little expenditure of power. The intermittent rotating motion is obtained in the following manner: An eccentric *c* is keyed to the crank-shaft, and connected by an adjustable rod to a bell-crank *d* fixed on to

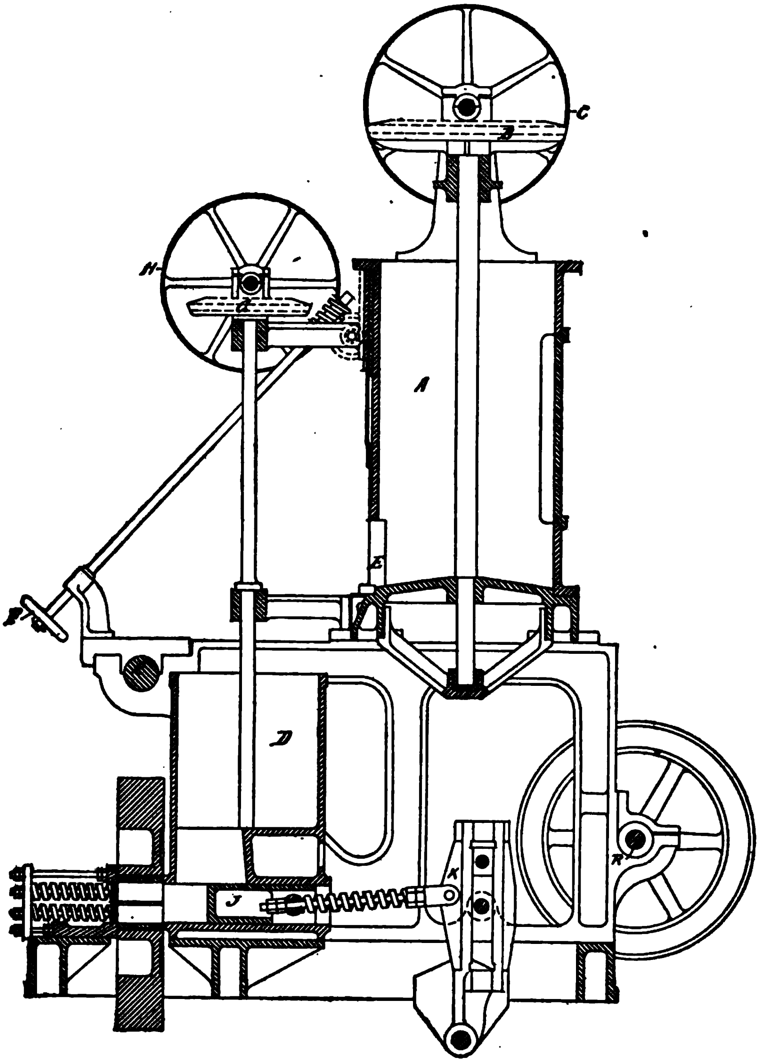

FIG. 18.

the rocking-shaft *e*, and connected by the rod *f* to a pawl or ratchet *g*, engaging into notches in a small ratchet-wheel *h*. The connecting-rods for the main lever and the charging-ram are fitted with spiral springs, so as to yield when the maximum pressure to which the press is adjusted has been reached, thus preventing the press from being broken in case of iron or any extra hard substance finding its way into the paste. To prevent the mold-plate from moving during the filling, compressing, and pushing-out operation, a locking gear is arranged, consisting of a detent *i*, which engages into notches provided in the circumference of the mold-plate; this detent is always pushed against the mold-plate by the lever *k* and weight *l*; and is withdrawn by means of the lever *m* being raised at one end by being lowered at the other by a cam *n* on the fly-wheel shaft. The pressure rams are made with capped faces or projecting edges, which round off at the sharp corners, front and back. These machines are made to compress one large, two half-size, and four quarter-size briquettes at each compression.

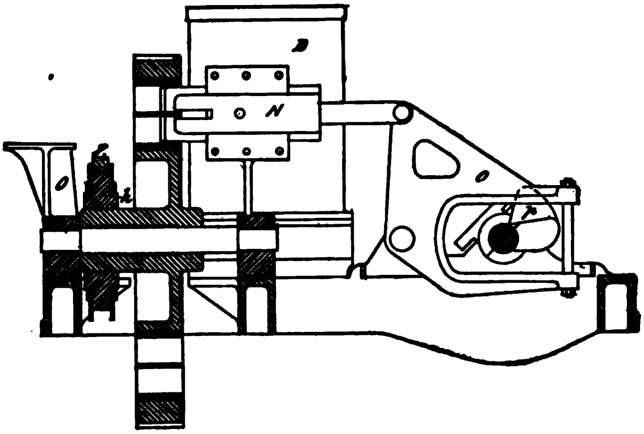

FIG. 19.

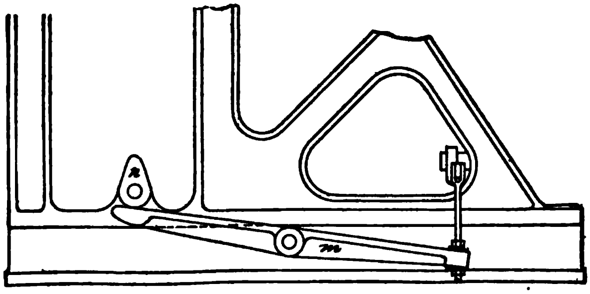

FIG. 20.

The Robert Middleton briquette press is manufactured by Robert Middleton of Sheepscar Foundry, Leeds, England. It is illustrated in elevation (Fig. 21), plan (Fig. 22), end view (Fig. 23), and section of the feed-mill enlarged (Fig. 24). *A* is the vertical heater or mixer which is placed on the top of the two side-frames *B*. From this the mixture of unpressed coal-dust and pitch, or any other bond, falls into the feed-mill *C*, which allows the steam to escape so that the fuel may be made without cracks. At the bottom of this mill is a chamber, which opens and shuts according to the position of the feed-ram. When the chamber is open it takes a charge, and then the ram sends it forward to the mold-plate *D*, thus giving a constant density and an even weight in each mold. The feed-ram has a very strong volute spring at the back, allowing it to yield in case of heavy density. The mold-plate is then moved one-eighth of a revolution at each stroke of the pulling-over motion, which is effected by suitable ratchet notches *E*, arranged on the periphery of the mold-plate *D*. These notches correspond with the centers of the equally pitched molds, into which the tongue or pawl *F*, and the saddle *G*, which loosely bestrides the top of the mold plate, are arranged to fall, and in that way engage the said notches when the saddle *G* is moved to and fro. In a line with the mold-plate *D* is placed a 'lever *H*, with a fulcrum *J* at its foot parallel with the axis of the plate. The head of the lever *H* is coupled by a suitable pin *K* to the pawl-carrying saddle *G*, so that when suitably rocked backward and forward the mold-plate is gradually rotated in the desired manner. The saddle is arranged to slide in a groove, and is fitted with two pawls, one on each side, and to keep all strains central the lever *H* is furnished with a central fork end. The saddle *G*, when advancing to a new notch, has necessarily to clear the groove of any obstruction that may have gathered therein, and for this purpose its nose is made sharp.

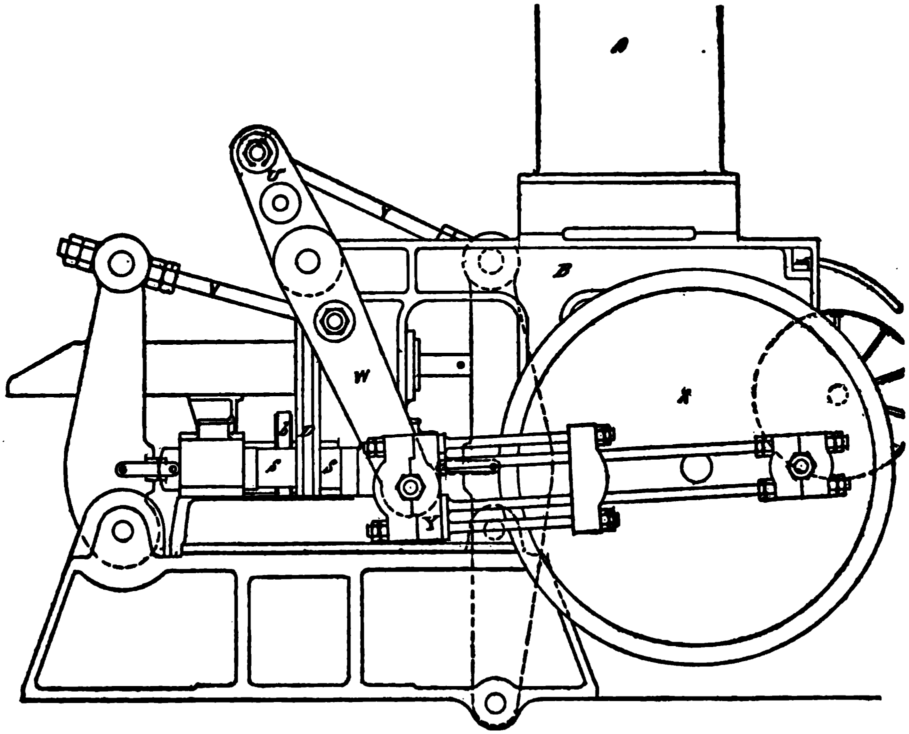

FIG. 21.

The actuating lever *H*, which is slotted, is rocked by the action of a stud *M* projecting from an adjoining crank disk *N*. By arranging the crank plate *N* to revolve to the required direction a slow advance is given to the plate, with a quick return to the lever and saddle. *O* is a detent, which is advanced against the mold-plate to hold it truly when a mold is in position, and is worked by a cam on the crank disk *N*. By arranging this cam with a shielded groove the detent is locked in position during the desired period. In this case the lever *P*, fitted with the stud *R*, and working in a peculiarly shaped cam, holds the detent against the mold-plate when necessary and withdraws it in proper time. To prevent the mold-plate from overrunning when the material is shorn through, a small brake-disk *a* is fitted to the mold-plate and furnished with brake-strap *b*, which latter is tightened on the disk by means of a lever *c*, actuated by a cam *d* on the disk *N*. When the charged mold reaches the pressing side *S*, the pressing rams come into action on both sides at the same time, when solid briquettes are made, but when arranged as shown in elevation (Fig. 21), the pressing arm on the left side traverses only half the distance of the one on the right hand, this latter arrangement being preferred when perforated briquettes are made. After the pressing is completed the plate is moved one-quarter of a revolution to the pushing ram, and the briquette is pushed on a spout about 1 ft. 6 in. long; at the end of this spout a traveling belt takes the briquette away to any desired place. The pressing rams *S* and *S* are attached to heavy levers which work to and fro by a rocking

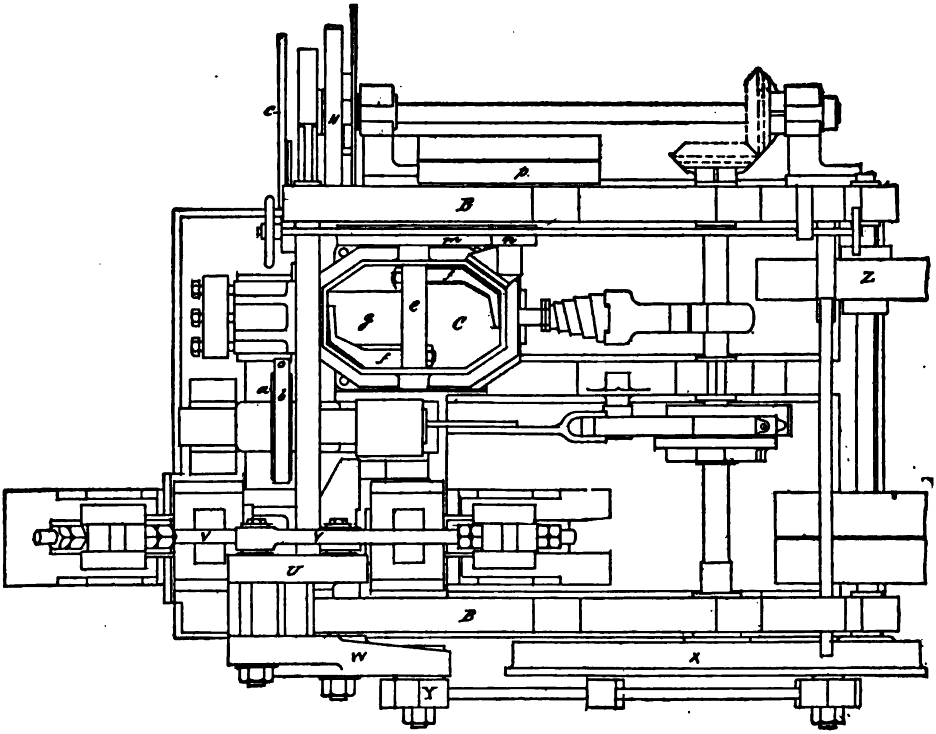

FIG. 22.

lever *U*. The coupling rods *V* and *V* are provided with screw adjustment, so that the pressure on the briquette can be regulated at will. The rocking lever is actuated by another heavy lever *W*, which is connected to the counter disk *X* by a connecting-rod *Y*, fitted with heavy springs so as to give a pressure of 4,480 lb. per sq. in. on the briquette, and also serves as a safeguard in the event of iron or the like finding its way to the pressure side. A heavy fly-wheel *Z*, placed on a stud shearing plate, makes the whole machine run easily and with little consumption of power.

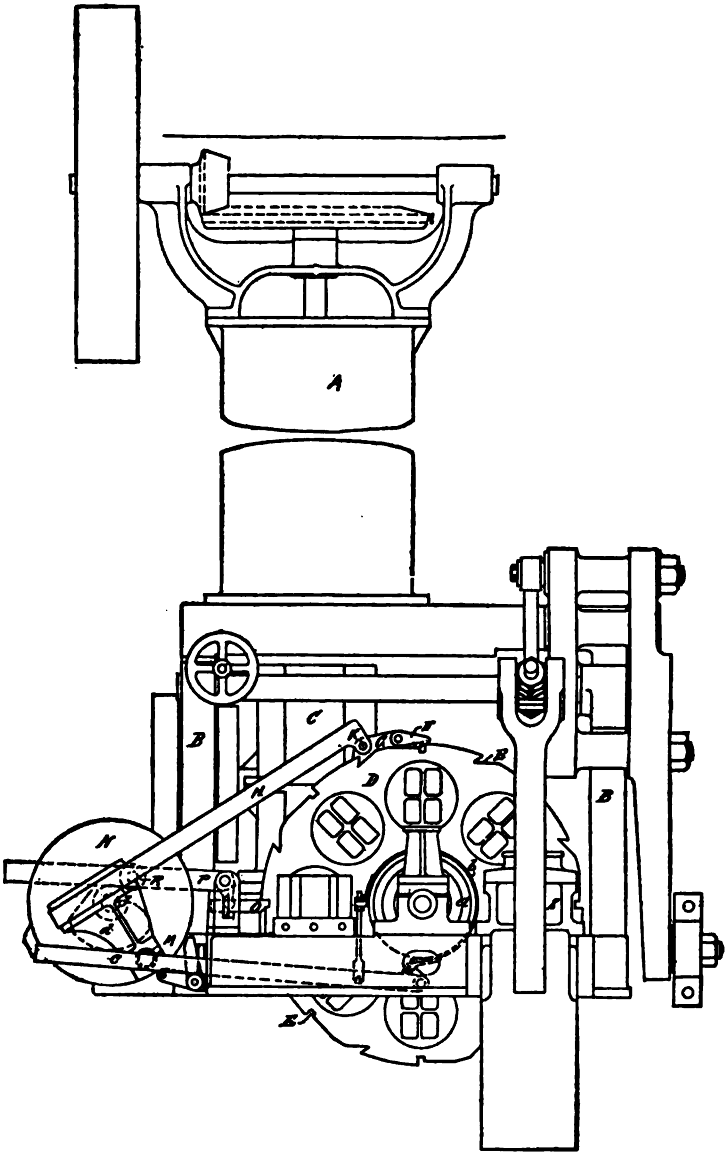

FIG. 23.

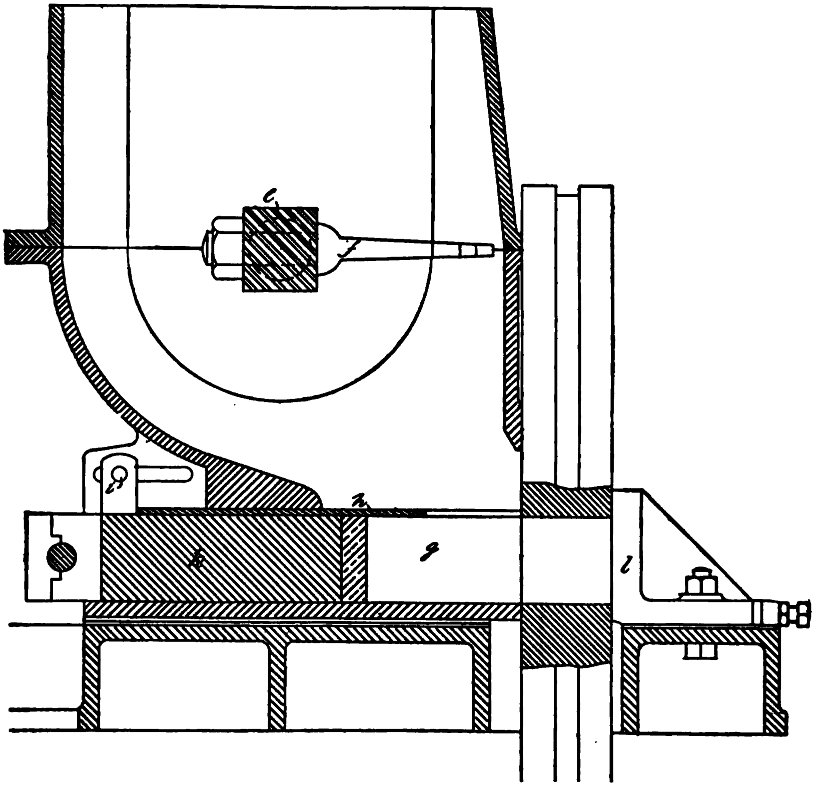

Fig. 24.

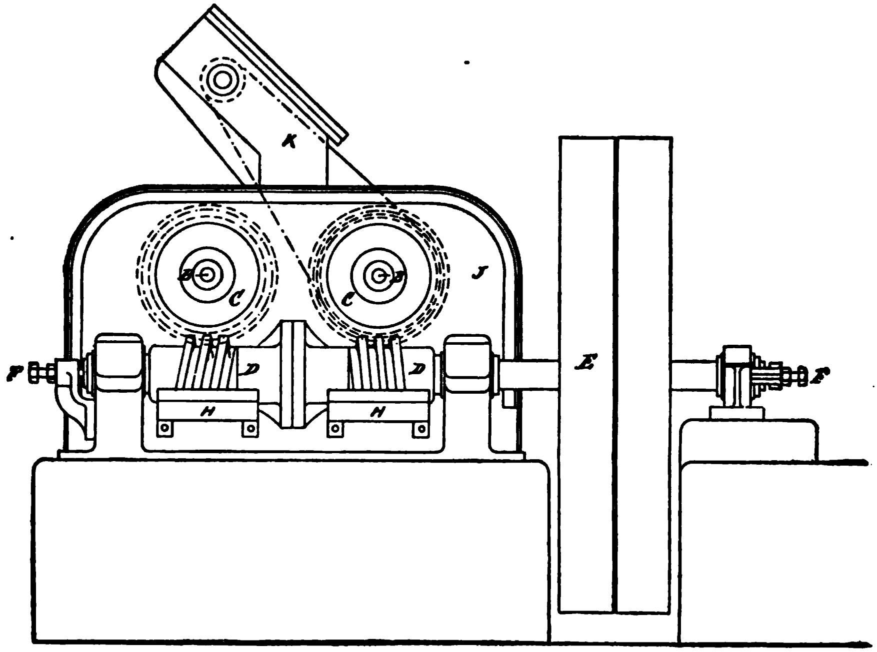

Fig. 25.

In order to insure a perfect filling of the molds Mr. Middleton adopts the feeding-mill shown enlarged in sectional elevation (Fig. 24). It consists of a shaft *e* provided with two peculiarly-shaped beaters or scrapers *f*, which force the paste into the feeding-chamber *g*, the opening for the exit of the paste being regulated by the slide *h*, which can be adjusted at will and fixed in position by the stud *i*; *k* is the feeding-ram, and the charge is pushed forward against the fixed plate *l*. The beater shaft is driven by means of the spur-wheel *m*, spur-pinion *n*, and fast and loose pulleys *p*.

There is a great number of designs of circumferential or tangential presses. Probably the best is the one invented by M. Fourquemberg, which is illustrated in side elevation (Fig. 25), plan (Fig. 26), end view (Fig. 27), and section of worms and worm-wheel (Fig. 28). This, like nearly all, or I might say all, satisfactory presses of this class, is employed for making spherical or egg-shaped fuel. This press consists of two cylinders *A* and *A*, in rolling contact, the faces of these being furnished with recesses, which are preferably arranged in spirally crossing lines, whereby as little space as possible may be left between them. The recesses of one cylinder correspond exactly with those of the other, so that as they revolve they form closed molds; the fuel or substances being molded are compressed into the cavities, and therefore take the form of the molds. The balls or blocks so formed pass down with the revolving cylinders, and fall out by their own weight. On the cylinder spindles *B* and *B* are keyed worm-wheels *C* and *C*, operated respectively by the right and left-hand worms *D* and *D*, carried upon one shaft, to which is keyed a pulley *E*, for driving the shaft; it also has a loose pulley for stopping the press. The shaft carrying the worms is placed between two back centers *F* and *F*, so that the shaft may be adjustably displaced in longitudinal

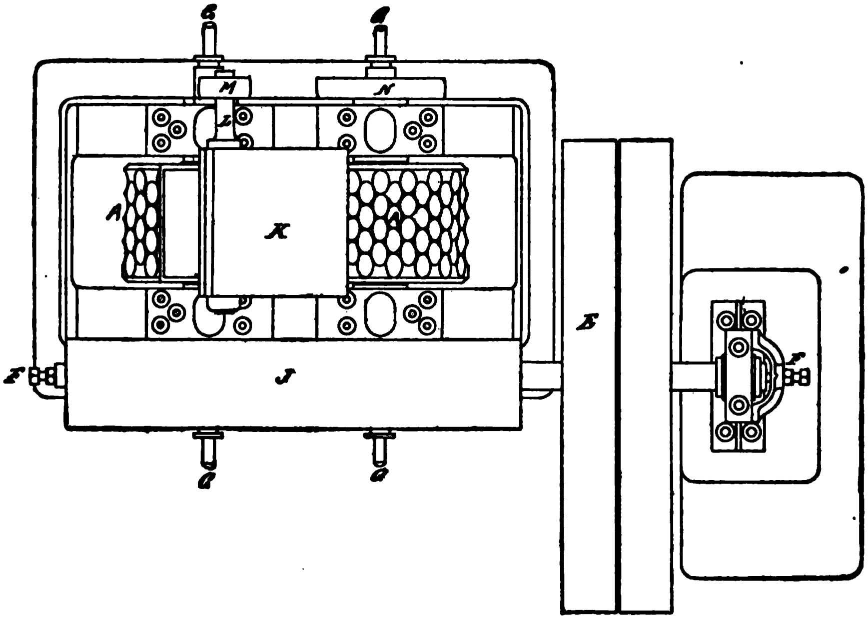

FIG. 26.

direction. As the two worms act in contrary direction there is no lateral pressure on the plummer blocks of the shaft. Since also the wear of the worms is equal and compensating, the recesses in the cylinders will always retain their relative position. Should, however, the recesses not coincide exactly one with the other, from any cause, a longitudinal movement of the worm shaft, in one or other direction, will cause the recesses to coincide.

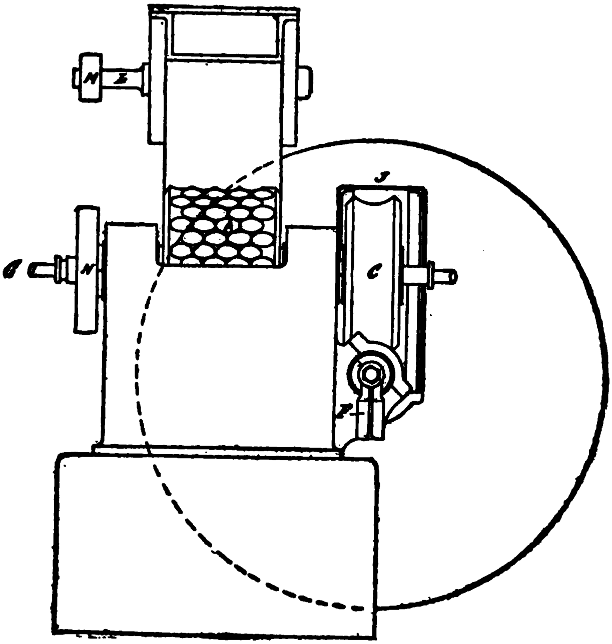

FIG. 27.

It will be readily understood by reference to Fig. 28 that the horizontal displacement of the worms in the direction of the arrow, for example, will turn the two cylinders in the same direction—that is to say, will cause their surfaces in contact to slide one upon the other, the half-mold of one cylinder moving upward, and the half-mold of the other moving downward, the recesses of the two cylinders being brought again into exact coincidence. The two worms are sometimes keyed separately on their shaft, and at other times they are provided with flanges, as shown in Fig. 28, and bolted together. In such cases only one

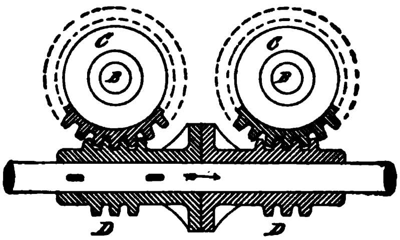

FIG. 28.

worm need be keyed to the shaft, and the flanges are fitted with enough bolts to take the strain, intermediate holes being provided in one flange so that they may be set in such manner that the relative positions of the threads of the worms and worm-wheels may be adjusted to a fraction of the pitch. This manner of arranging the two worms serves also as a means for enabling the wear of the worms and the teeth of the worm-wheels to be compensated without longitudinal displacement of either worm in its entirety on the shaft.

The molding cylinders are made hollow, and heated by means of steam admitted by the pipes *G* and *G* passing through the axis of the cylinder bearings, when the coal-dust or small coal is agglomerated by the dry pitch process; and water for agglomerating by the wet process. The worms work in oil baths *H*, and the worms and worm-wheels are incased in a sheet-iron cover *J*. The bearings for the cylinder spindles are made adjustable. The material to be agglomerated is placed in the hopper *K*; this hopper does not carry any agitators or other mechanism for causing the descent of the material when the latter is pulverulent, but if the material be mealy or apt to clog, the hopper is provided with a horizontal shaft *L*, carrying helicoidal teeth or radial arms, causing the material to be evenly spread across the hopper, and also passed down therein. The shaft *L* carries a pulley *M*, driven by belt from the pulley *N* on the shaft *B* of one of the cylinders.

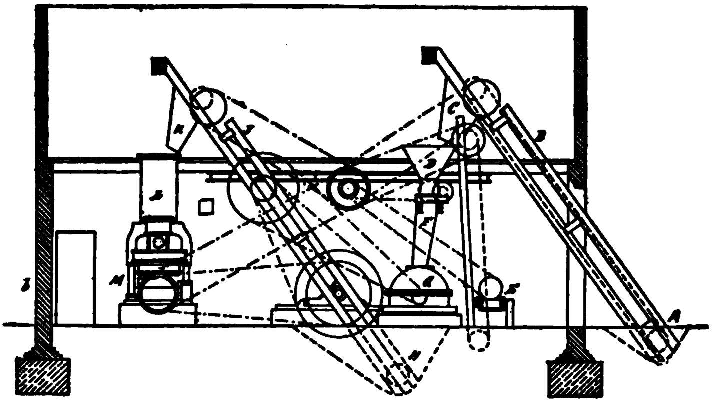

FIG. 29.

Perforated Briquettes.—The advantages claimed for perforated briquettes are: that they burn better; the steam is more easily got rid of during compression or immediately after it, thus preventing cracking during cooling; and lastly, when large briquettes are made which require breaking before being put into the fire, the breaking is more easily performed, and with less waste than is the case with solid fuel.

The perforating is done in three different ways, namely: (1) After the briquette has been compressed; (2) during the compression; and (3) before compression—that is, the perforating pins are in the mold before the compressing piston comes into action.

When the perforations are circular and small, and the perforating pins have to be pushed through the pressed briquettes, there is always great danger of breaking the pins; this danger is greatly reduced when the perforating is performed during the compression, but the difficulty in that case consists in the pins being clogged, especially at the shoulder. This danger has been overcome by Robert Middleton, who makes the perforating pins travel double the distance as compared with the compression piston in the same time, and the pins pass through a fixed plate having holes fitting the pins, so that when the pins are withdrawn from the pressed briquette they are also cleaned by the fixed plate, and no paste can adhere to the shoulders of the pins. The punchings are pushed out of the briquette through holes in the pressing piston.

Arrangement of Briquette Machinery.—Stevens' arrangement is illustrated by the plan adopted by the Uskside Engineering Co. It is shown in elevation (Fig. 29) and plan (Fig. 30). The coal is delivered from the railway truck into the bottom of the trough *A* of the coal elevator *B*, and delivered through the shoot *C* into the feed-hopper *D*. *E* is the pitch cracker, where the pitch is broken up, the pitch being raised by the elevator into the hopper *D*, where it is mixed with the small coal. From the hopper *D* the pitch and coal pass down the long shoot *F* into the disintegrator *G*, from which it passes down into the elevator trough *H*. Thence it is raised by the elevator *J* into the shoot *K*, mixer or pug-mill *L*, and the press *M*. *N* is the steam boiler and *O* the steam engine, which gives motion to the press by means of the main driving pulley *R* on the engine shaft, and pulley *P* on the press shaft. The elevators are operated by belts from the pulley *T*, on the press, and pulley *S* on the countershaft *U*, and from that shaft by the pulleys *W* and *W* to the pulleys at the top of the elevator. The pitch cracker is worked by pulleys and belt from the countershaft. The disintegrator is worked by a pulley *X* on the engine shaft to a pulley *Y* on the shaft *Z*, and by a belt from the pulley *a* to the disintegrator pulley. The finished briquettes are delivered through the opening *b* in the left wall of the building.

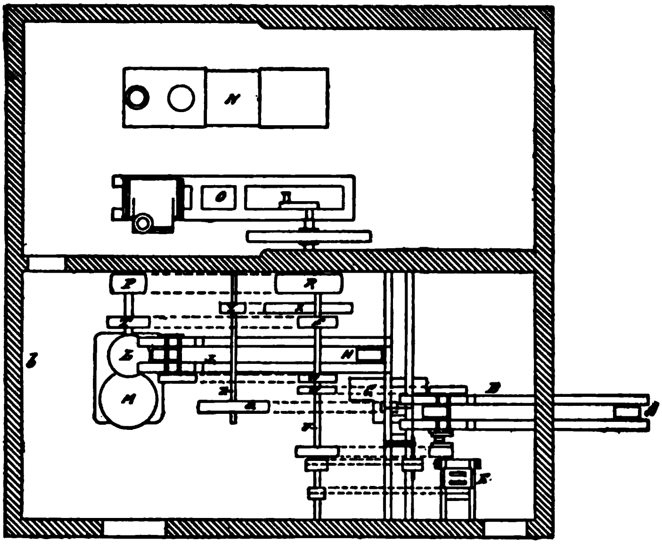

FIG. 30.

Yeadon, Son & Co.'s arrangement is illustrated in elevation (Fig. 31) and plan (Fig. 32). The coal is delivered from the railway truck into the trough *A* of the coal elevator, which raises the coal into the mixer *B*. *C* is the pitch-mill from which the pitch is raised by the elevator *D* into the shoot *E*, whence it falls into the mixer *B*, where it is amalgamated with the coal. The mixture is delivered into the disintegrator *F*, from which it passes into the trough of the elevator *G*. By the elevator *G* the mixture is lifted to the hoppers *J* and *J*, whence it falls by gravity into the vertical heaters or mixers *K* and *K*, from which it is fed into the briquette presses *L* and *L*, and the briquettes are delivered from the shoots *M* and *M* to the endless carriers *N* and *N*. *O* is the steam boiler, and *P* the steam engine, the latter giving motion to the whole of the machinery. The main driving shaft *R* runs at 100 revolutions per minute.

All other makers' arrangements are similar, only differing slightly as regards the position of the countershafts. Sometimes a sieve is placed between the hoppers *J* and the mixer *K*, and a shoot provided passing all material above a given size back into the disintegrator.

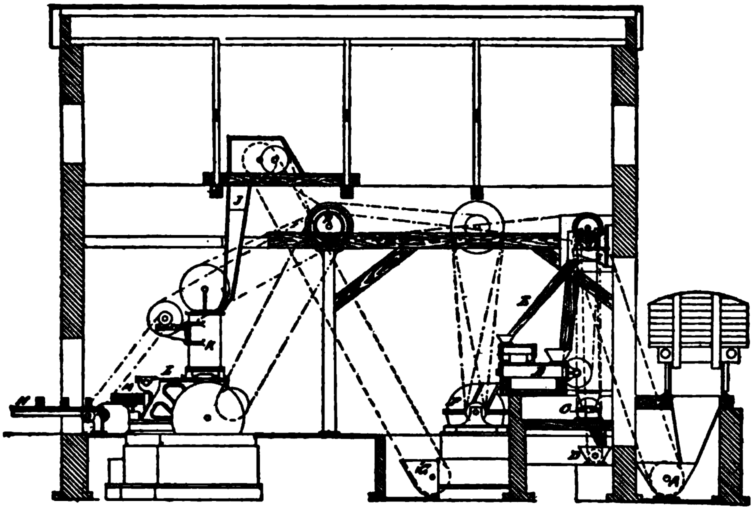

Fig, 31.

Cost of Making Briquettes.—The cost of manufacturing 100 tons of patent fuel in England is as follows: One pressman, 5s.; two lads taking off and loading on trolleys at 3s., 6s.; one man unloading coal, 4s.; one lad assisting, 3s.; one man at pitch mill, 4s.; one man on first floor, 4s.; one engine-driver, 5s.; one stoker, 4s.; two laborers at 3s. 6d., 7s.—total labor, 42s., equal to 5.04d. per ton. Coal, say 92 tons at 5s. per ton, £23; pitch, 8 tons at 32s. per ton, £12 16s.; labor as above, £2 2s.; fuel burned, 2 tons at 10s. per ton, £1—total, £38 18s., or 7s. 10d. per ton. Depreciation and interest, say 2d. per ton, or a total of 8s. per ton.

The actual cost of a years' working, making 80 tons per day of nine hours and using two presses, briquettes weighing 4 lb. each, at the Chatterly-Whitfield Colliery, Stoke-on-Trent, England, is as follows: Labor, including stacking (average for 12 months), 8.07d. per ton; oil and grease, 0.30d.; sundry stores, 0.50d.; fuel—steam taken from colliery boilers—estimated at 2.00d.—total labor, 10.87d. Slack or small coal, 72 tons at 4s. 10d., £17 8s.; pitch, 8 tons at £1 6s. 3d., £10 10s.; total material, £27 18s., *i.e.*, 6s. 11.07d. per ton; interest and depreciation at 7%, 2.50d.; total cost per ton, labor and material, 8s. 0.44d.

The cost at a 100-ton plant was as follows: Two men unloading coal and pitch at 4s. each, 8s.; one man at cracker and mixer, 4s.; one lad at same, 2s.; two men at briquette presses at 4s. each, 8s.; four lads loading briquettes in wagon at 2s. each, 8s.; one engine-man, 5s.; one lad to assist engine-man, 3s.—total labor, £1 18s. Coal for boiler and superheater, 5s.; grease and sundries, 1s.—total, £2 4s., or 5¼d. per ton. Pitch, 7% at 18s. per ton, or 1s. 3d. per ton, making the total cost 1s. 9d. per ton.

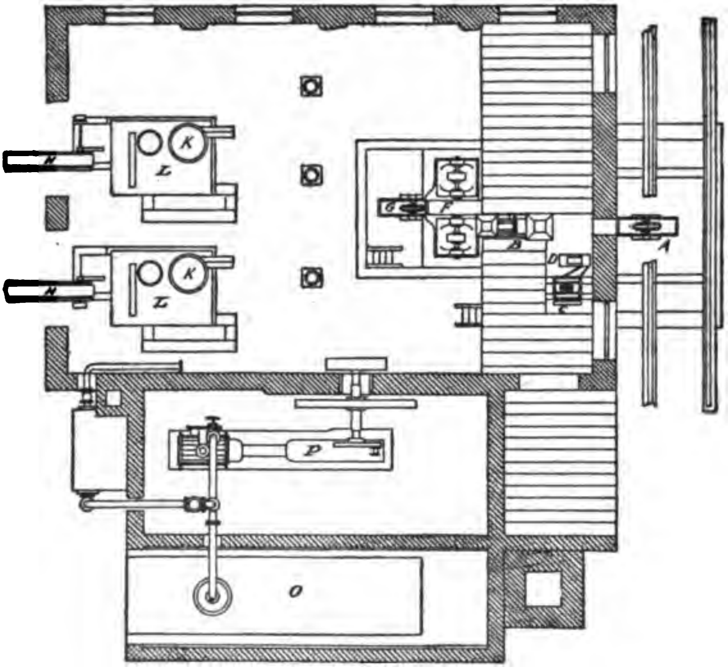

FIG. 32.

The cost of making 102¼ tons of briquettes in 10 hours with two presses was: One foreman, 8s. 4d.; three men shunting and tipping trucks, 10s.; two men discharging pitch, 6s. 8d.; one man tending disintegrator, pitch-mill and distributor, 3s. 6d.; two pressmen, 9s. 6d.; one fitter, 3s. 10½d.; three firemen for boilers and superheater, 8s. 9d.—total labor, £2 10s. 7.50d. Management, weighing and timekeeping, £1 0s. 1.31d.; stocking, loading, etc. (by contract), £1 18s. 3.61d.—total, £5 9s. 0.42d., or 1s. 0.82d. per ton. Supplies and repairs (average for 12 months): oil and grease, 0.85d. per ton; castings (including brasses), tools, etc., 4.65d.; coal for boiler and superheater (charged at 4s. 10d.), 7.22d.; coal for briquettes, 91¼ tons at 4s. 10d., £22 1s. 6d.; pitch, 11 tons at 26s. 3d., £14 8s. 9d., making £36 10s. 3d., or 7s. 1.70d. per ton; interest and depreciation at 7%, 4.21d.—total cost per ton, 9s. 7.45d.

The cost of making 120 tons of briquettes per day in Belgium was: Labor of all kinds, 10.73d.; fuel for boiler, 7.88d.; fuel for drying furnace, 1.42d.; coal for agglomeration, 2,072 lb. at 8s. 8½d. per ton, 8s. 0.66d.; pitch, 163 lb. at 33s. 3d. per ton, 2s. 5.92d.; repairs and maintenance, 7.41d.; stores and supplies, 2.94d.—total, excluding charges for interest and depreciation, 13s. 0.96d.

Cost of making briquettes in France—requirements for each group of two presses: Two foremen at 3s. 2d., 0.57d. per ton; three men shunting trucks at 2s. 4½d., 0.57d.; two men discharging pitch at 3s. 2d., 0.47d.; four men discharging coal at 2s. 7d., 1.04d.; three men breaking pitch at 2s. 7d., 0.76d.; 16 men at presses, etc., at 2s. 9½d., 3.99d.; three men loading and stacking at 2s. 7d., 0.76d.; eight firemen and laborers at 2s. 9½d., 1.90d.—making the cost of labor 10.06d. per ton; added to which are: Oil and grease, 1.04d. per ton; timber, castings, etc., 0.66d.; horses, 0.66d.; repairs, 3.80d.; fuel for boilers at 4s. 2d. per ton, 3.32d.; general, 1.42d.—or 10.90d.; thus making a total of 1s., 8.96d. per ton, excluding cost of pitch and briquette coal, general charges, interest, and depreciation.

THE VELNA BRIQUETTE PROCESS.

THIS process of making briquettes is being tried in Belgium and France. To make the briquettes petroleum residues are mixed with any convenient animal fat and the whole saponified with soda to an emulsion, which is used as a binder for the coal dust or slack. For the rest of the process any ordinary type of briquette machine can be used, the only special machinery needed being a mixing tub. The petroleum serves to enrich the mixture, so that very good briquettes can be made from common lignite or brown coal, it is said. The quantity of the binder used is from 5 to 10% by weight of the coal. This emulsion costs in Belgium about $12 per ton, or from 60c. to $1.20 per ton of briquettes.*

---

* *Engineering and Mining Journal*, Jan. 29, 1898.

COPPER.

The production of copper in the United States in 1897 reached the enormous total of 510,190,719 lb. (227,763 long tons), and exceeded the output in 1896 by 30,384,536 lb. The following table shows the amount of copper produced in each State and the amount used in making copper sulphate; as this item is not elsewhere included in the copper produced, it is proper that it should be added to the production as heretofore reported. In 1897 the copper used in making sulphate amounted to 13,003,236 lb., and in 1896 to 12,183,210 lb. The amount of copper sulphate produced has always been given in The Mineral Industry.

COPPER PRODUCTION IN THE UNITED STATES.

(Pounds of fine copper.)

States.	1894.		1895.		1896.		1897.	
	Pounds.	Long Tons.	Pounds.	Long Tons.	Pounds.	Long Tons.	Pounds.	Long Tons.
Arizona	44,531,108	19,880	48,329,403	21,575	73,745,321	32,922	81,019,922	36,170
California	120,156	54	225,650	101	1,971,545	880	14,129,920	6,308
Colorado	6,528,214	2,914	6,125,000	2,734	9,539,245	4,259	9,437,063	4,213
Michigan	114,526,555	51,128	129,740,765	57,920	144,058,524	64,312	145,839,749	65,107
Montana	183,094,755	81,739	194,768,925	86,950	228,958,164	102,213	237,158,540	105,874
Utah	1,183,098	528	2,664,757	1,190	3,550,050	1,585	3,854,821	1,721
Eastern and Southern States	2,437,986	1,088	3,255,000	1,453	3,750,124	1,674	3,727,939	1,664
All others	1,082,442	483	1,344,350	601	2,050,000	915	2,018,929	901
Copper in sulphate	12,500,000	5,580	12,000,000	5,357	12,183,210	5,439	13,003,236	5,805
Total domestic production	366,004,314	163,394	398,453,850	177,881	479,806,183	214,149	510,190,719	227,763
Stock January 1	57,418,689	26,073	78,738,689	34,698	86,961,280	38,822	83,600,000	37,321
Imports bars, ingots, old, and ores	11,726,485	5,235	13,875,560	7,194	*a*27,404,087	12,234	*a*26,938,254	12,026
Total supply	435,149,488	194,702	491,068,099	218,773	594,171,550	265,255	620,728,973	277,110
Deduct exports	167,651,153	75,737	121,703,978	54,332	281,905,217	125,851	288,626,240	128,851
Deduct consumption	188,759,646	84,267	282,392,841	125,619	228,666,333	102,083	283,220,590	126,438
Stock December 31	78,738,689	34,698	86,971,280	38,822	83,600,000	37,321	48,882,143	21,821

(*a*) This includes copper imported in low-grade Spanish and other pyrites chiefly for sulphur, and the copper imported from Canada in copper-nickel matte, in which the nickel is the metal of chief value: also the copper in certain gold and silver ores. These items do not appear in the United States statistics of imports.

The consumption was especially large in Europe, where there was a great increase in electrical work. The revival of demand in the United States at the end of the year was largely due to the same cause. The greater part of the United States production was exported, nearly all going in the form of pigs, bars, and cathodes, and only a small quantity as matte. Fully one-half of the entire American production of copper was refined electrolytically in this country in 1897. In this connection it is interesting to note the great reduction in recent years of the stock of metal required in electrolytic copper refineries. Ten years ago it was not uncommon for copper refiners to have in stock in their tanks 100 times as much copper as was daily produced. Improvements in the process have brought this necessary stock down to an average of 15 to 20 tons per ton of output. This has been effected by employment of increased current density, resulting in more rapid working with the same stock of solution. Where currents of only 2 to 4 ampères per sq. ft. of anode surface were formerly used, to-day the average is over 11 ampères, and in some works currents as high as 20 ampères are used. The end of this movement toward an increase in current density is not yet in sight. Besides the copper in the tanks there is generally tied up from 50 to 100% of this quantity in the form of main conductors, raw copper for making anodes, new anodes ready for immersion, residues of old anodes, and stock of refined copper. It may be said generally, therefore, that the average proportion between the total copper in course of treatment and the yearly output of an electrolytic copper works is now about 4 to 10%, against two or three times as much 10 years ago.

The increased output of copper being accompanied by an important advance in price, Lake averaging 11.29c. per lb. as compared with 10.88c. in 1896, gave great prosperity to the copper companies, whose dividends increased and whose shares reached the highest point ever recorded. The industry is in excellent condition and our mines are capable of increasing largely their output in all the chief producing States, while many new deposits are being tested, and some of them promise to become large producers in the near future.

California.—The only producer of copper in this State in 1897 was the Mountain Copper Co., which made an output of 165,060 short tons of ore, of which 97,185 tons were smelted, producing 7,238 tons of copper in the form of matte, or 7.45%. The amount of finished copper produced during the year was 14,047,220 lb. The profit in the operation of the company up to the end of 1897 was £63,144, out of which dividends amounting to £62,500 were paid.

Arizona.—The copper mines of the Queen-Detroit groups continue to be worked in the same regular, prudent manner as heretofore. The conditions of copper mining in this Territory are described in an appended special article.

COPPER PRODUCTION IN ARIZONA.

(Pounds of fine copper.)

Mines.	1892.	1893.	1894.	1895.	1896.	1897.
Arizona Cop. Co..	5,893,533	7,871,819	9,935,812	11,308,910	13,042,000	13,727,911
Copper Queen...	12,916,416	13,795,618	12,688,372	15,741,781	23,298,150	23,999,878
Commercial......	282,451	273,330	90,805	....	46,040	....
Detroit...........	1,918,594	4,942,728	5,777,744	3,790,128	7,016,348	8,405,138
Old Dominion....	7,698,297	7,665,293	4,839,386	....	5,650,000	2,000,000
United Verde....	9,524,492	9,121,146	10,904,453	16,491,402	22,827,950	31,355,025
United Globe....	....	....	....	....	2,020,565	1,241,975
Other mines.....	149,333	103,741	214,536	997,282	344,268	290,000
Totals........	38,383,116	43,773,675	44,531,108	48,329,403	73,745,321	81,019,922

Colorado.—The copper production of this State, amounting to 9,437,663 lb., was derived chiefly from Leadville and the San Juan region.

Idaho.—The New York & Idaho Smelting Co., which acquired the Peacock, Helena, and White Monument claims in the Seven Devils district, carried on developments chiefly on the Peacock outcrop, where an open cut is said to show a face of ore assaying about 20% copper and $8 gold per ton. A smelting furnace of 100 tons capacity, built by the Nichols Chemical Co., after the type of the furnaces used at its works at Laurel Hill, L. I., was erected at Cuprum.

Michigan.—There was but a very small increase in the copper production of Michigan in 1897; the Calumet & Hecla fell off a little in output, while none of the other mines increased much. The output can, however, be increased at will in the Calumet & Hecla, and some new mines are coming forward.

COPPER PRODUCTION IN MICHIGAN.

(Pounds of fine copper.)

Mines.	1892.	1893.	1894.	1895.	1896.	1897.
Allouez..........	546,580	....	....	....	....	....
Atlantic.........	3,703,875	4,221,983	4,437,609	4,832,497	4,894,228	5,109,663
Calumet & Hecla	58,292,576	62,825,674	61,842,722	77,439,907	90,356,733	88,878,986
Central..........	1,625,982	1,177,500	584,950	370,381	469,248	611,172
Copper Falls.....	1,400,000	1,000,000	....	....	....	....
Franklin.........	3,767,000	3,504,244	3,602,608	3,086,938	2,746,076	2,908,384
Huron............	461,499	562,776	....	....	....	....
Kearsarge........	1,580,192	1,546,318	1,998,710	1,946,163	1,337,226	....
Mass.............	17,450	22,737	41,805	18,372	38,684	24,081
National.........	36,858	63,433	36,390	50,128	53,762	28,959
Osceola Consol'd	6,894,256	6,216,975	6,879,000	6,270,373	6,251,304	9,500,000
Peninsular.......	973,217	....	....	....	....	....
Quincy...........	11,015,686	14,398,477	15,484,014	16,304,721	16,863,477	16,924,618
Ridge............	41,462	25,988	52,481	64,363	....	12,590
Tamarack.........	16,426,643	15,085,113	15,375,000	14,840,000	16,495,000	20,000,000
Tamarack Junior	796,769	1,610,259	2,850,000	2,605,000	2,330,000	....
Wolverine...	500,074	1,025,062	1,665,255	1,817,806	2,195,791	2,816,296
All other mines..	11,750	251,304	176,011	94,121	27,000	25,000
Total pounds.	108,091,836	113,587,793	114,526,555	129,740,765	144,058,524	146,839,749

The production of the Atlantic Mining Co. in 1897 was 5,109,663 lb. of fine copper, which sold at an average of 11.23c. per lb. The total receipts from sales of copper, interest, etc., were $575,441. Mining expenses came to $401,807; smelting, freight, and marketing, $67,162; construction, $37,446; exploring, $4,948; purchase of land, $7,000; total, $518,363. The total amount of rock stamped was 394,296 short tons. The yield in refined copper was 5,109,663, or 12.96 lb. per ton of ore stamped, equivalent to 0.648%. The average value of the product per ton was $1.46; mining, breaking, etc., cost 73.43c.; transportation to mill, 4.54c.; dressing, 23.94c.; total, $1.0191. Freight, smelting, and marketing the product came to 17.03c., making the total running expenses, including all general and office expenses, etc., $1.1894, or 9.17c. per lb. of copper. This mine continues to hold the world's record for economical work under similar conditions; indeed the figures just cited are marvelous, and the highest possible testimony to the excellence of the management of the property.

The Baltic Mining Co. was organized in 1897 with a capital of $2,500,000 divided into 100,000 shares, which were issued as $10 paid by conveyance of 800 acres of mineral land, including the old Baltic mine. The working capital was provided by calling up $1 per share. The country rock is amygdaloid, and the lode, so far as shown up, is of considerable width, although it is not mineralized throughout. For the present the output is to be crushed at the Atlantic mill, the directors of the Atlantic company being largely interested in the Baltic. The Baltic gives promise of becoming a large producer.

The total receipts of the Central Mining Co. in 1897 were $68,723 from sales of copper and $389 from interest account. The expenses at the mine were

$74,222, and for smelting, freight, etc., $14,352. The production of mineral was 440 tons, which yielded 614,891 lb. of refined copper. No discoveries were made during the year in the Central, which is a "mass" mine, and its outlook is not bright.

The receipts of the Franklin Mining Co. in 1897, for 2,908,384 lb. of copper produced and sold, were $320,751, and for interest, $166. The expenses at the mine were $268,264, and other charges, including smelting, freight, etc., $43,181. The amount of rock sent to the stamp mill was 132,026 tons, which yielded 2,908,384 lb. of refined copper at a cost of 54c. per ton. The total expense of mining and milling was $1.82 per ton.

The report of the Osceola Consolidated Mining Co., covering the operations of the Tamarack, Jr., Kearsarge, and Osceola mines in 1897, shows that gross receipts from sales of copper, interest, etc., were $1,338,056, and expenses $1,075,655. The amount of rock dressed was 443,086 tons, the cost of crushing and concentrating being 25.57c. per ton, and the yield of copper 9,500,000 lb., or 1.07%. This company took over the property of the Kearsarge and Tamarack Jr. mining companies, increasing its own capital stock to 100,000 shares, of which 25,000 were applied to the purchase of Kearsarge property and 16,000 to the Tamarack Jr., leaving 9,000 shares in the treasury. The property of the Iroquois Copper Co., previously acquired by the Kearsarge, was included. In explanation of the consolidation the directors of the Osceola company stated that the history of the Osceola mine had been that common to all mines working on an amygdaloid lode. The various parts of the mine have at times all been in good copper-bearing ground, while at other times the reverse has been the case, and it has been a severe strain upon the mine to furnish the regular output. This great variation in the lode has always made it necessary to carry on development and opening work to a very extensive degree. The Osceola stamp mill, originally erected over 30 years ago, needs very extensive alterations to bring it up to the standard of modern mills. With the consolidation a larger number of stamps would be necessary, and a much more modern and complete mill could be erected than if it were merely attempted to remodel the old mill, and yet the latter was all that would be warranted if the treatment of the Osceola product were only in view.

The production of the Quincy Mining Co. in 1897 was 16,924,618 lb. of refined copper, which realized $1,890,238, of which $18,025 was for silver. The expenses were as follows: Mine-running expenses, $890,732; construction, $18,466; taxes in Michigan, $45,802; smelting, transportation, etc., $214,471—total, $1,169,471, giving a mining profit of $720,767. Interest and rents brought the total net income up to $731,279, which, added to balance from the previous year, etc., gave a total of $2,049,732. Out of this were paid $800,000 in dividends and $38,561 for land, leaving a balance of $1,211,171 at the close of the year. The total amount of rock mined was 632,867 tons; rock stamped, 542,623 tons, which yielded an average of 1.56% copper. The average receipt for copper was 11.06 and for silver 0.11c. per lb. of copper sold. Mine expenses averaged 5.26c. per lb. copper, construction 0.11c., taxes in Michigan 0.27c., smelting, transportation, etc., 1.27c.—total, 6.91c., leaving a net profit of 4.26c. per lb. copper. The average wages of miners on contract were $52.52 per month. In 1898 the

Quincy company proposes to begin the erection of a modern smelting works on the site of the old Pewabic stamp mill at Ripley. The Quincy is a fine and well-managed property, capable of a great increase in outputs and profits.

The gross receipts from sales of copper by the Tamarack Mining Co., interest, etc., in 1897, were $2,261,341. The total costs, including construction ($204,-992), were $1,835,810. There were 611,539 tons of ore stamped, which yielded about 20,000,000 lb. copper. The company's reports do not state the exact amount nor give much other necessary information, but the official returns of the company to THE MINERAL INDUSTRY places the production at 20,000,000 lb. The total cost was $2.07 per ton. The cost of dressing was 26.41c.

Montana.—Extensions of plant were made by most of the producers in Montana. The Boston & Montana Co. increased the capacity of its works at Great Falls. The Butte Reduction Works increased their smelting capacity in order to handle the larger shipments of ore from the Colusa, Parrot, and Original mines. The Anaconda made additions to its works at Anaconda. The Parrot Silver and Copper Co., which resumed work at the Moscow mines, continued the construction of the new smeltery at Gaylord until the end of October, when operations were suspended until spring.

COPPER PRODUCTION IN MONTANA.

(Pounds of fine copper.)

Mines.	1892.	1893.	1894.	1895.	1896.	1897.
Anaconda	100,000,000	75,256,657	95,578,000	99,775,294	125,850,693	131,471,127
Boston & Montana	30,386,595	31,800,000	57,987,633	60,746,000	60,250,000	60,000,000
Butte & Boston	10,641,269	20,457,928			4,500,000	....
Butte Reduction Works	2,864,000	2,985,485	2,282,000	3,390,000	4,225,647	7,883,795
Colorado Smelting and Mining Co	4,560,972	6,703,488	5,158,730	7,750,000	9,090,680	8,911,578
Hecla Consolidated Mining Co	159,859	77,565	362,897	239,631	312,445	215,431
Parrot	12,438,782	7,791,167	7,469,908	7,257,000	8,045,648	14,824,487
Montana Ore Purchasing Co	....	8,400,000	12,298,686	14,861,000	15,049,066	13,047,648
Others	....	827,810	2,011,901	750,000	4,242,583	804,474
Totals	161,051,477	154,300,100	183,094,755	194,768,925	a228,958,164	237,158,540

(a) In addition to 818,531 lb. of Canadian copper smelted by the Montana Ore Purchasing Co. and deducted in the above table, there has been also deducted 1,000,000 lb. more of foreign copper estimated as having been included in the aggregate of the above returns, leaving the net amount 228,958,164 lb.

Anaconda Copper Mining Co.—During the year ended June 30, 1897, 132,-364,198 lb. of fine copper were shipped from Anaconda in the form of electrolytic cathodes and converter bars; the shipments of silver, either in bullion or converter bars, amounted to about 6,200,000 fine oz., and of gold, 20,380 fine oz. The sales in same period amounted to 120,864,097 lb. of fine copper, 6,057,067 oz. of fine silver, and 18,511 oz. of fine gold. The stocks of copper, silver, and gold on hand June 30, 1897, were valued at $5,521,031.48.

The costs at the mines and reduction works amounted to $11,538,517.53, less profits of $556,505.08 from the subsidiary departments, leaving a net expenditure of $10,982,012.45 in Montana. The expenditure for entirely new plant, all of which was charged to operation, amounted to $606,843.38.

The profit and loss account for the year showed a credit balance of $5,136,048. Of this, $166,639.93 was absorbed in fresh capital charges, leaving a liquid gain of $4,969,408.07. On June 30, 1897, the indebtedness of the company for advances, less cash resources on hand, was about $700,000, showing a decrease of about $1,500,000 compared with June 30, 1896; dividends of $3,000,000 were paid during the year; these two sums, together with larger stocks of metals on hand on June 30, 1897, practically account for the profit as above for the year.

Mr. Marcus Daly, the general superintendent of the company, made the following report:

During the year there was shipped to the reduction works at Anaconda, 1,408,369 tons of ore,* of which 676,577 tons came from the Anaconda group and 731,792 tons from the Syndicate group, being a much larger product than ever before shipped, exceeding the highest previous year by 152,495 tons. There was a considerable gain in the reserves of ore in the mines. The expenditures for machinery and for other construction work at the mines amounted to $387,531.63. The present equipment is sufficient to carry the operations of the mines 800 ft. deeper.

There were received at the reduction works 1,425,749 tons of ore, of which 17,380 tons were purchased, the remainder coming from the mines of the company. There were shipped from Anaconda 132,364,198 lb. of copper, of which 69,377,421 lb. were in the form of converter bars, and 62,986,777 lb. were the product of the Anaconda electrolytic refinery. There was also shipped 5,935,837 oz. of silver and 20,380 oz. of gold, contained in either converter bars or bullion.† The yield of copper per ton of ore treated was somewhat higher than that for the year 1895–96; the yield of silver was somewhat lower.

By a system of coarse jigging and by a very careful sizing and selection of the ores the losses in dressing were largely reduced, and an increased saving of metal was also attained by an improvement in the method of treating slags at the blast furnaces. The cost per ton for refining was also reduced, and a further reduction is looked for.

For construction and new permanent improvements there were expended at the mines, reduction works and subsidiary departments, $606,843.38, which was charged to operation. The larger portion of this was for machinery of increased capacity and necessary additions to the equipment at the mines owing to the more extended workings.

The product of the mines and smelters was greater than ever before, and this was accomplished without forcing the property. The capacity of the mines to produce ore was increased through the extension of the workings, sinking of the shafts, and opening of deeper levels. The capacity of the reduction works to handle the ore produced has not yet been reached.

The company paid in Montana for labor $7,131,747.13, the average number of men employed each day (counting 365 days in the year) having been 6,130.

Nearly all the freight business of the Butte, Anaconda & Pacific Railway consists of ore, coal, and coke hauled to Anaconda. For the year 1896–97 the cost per ton was 15.6c. for an average haul of 25 miles, a phenomenally low cost for such a short haul, with the load only one way and with adverse grades of 1%.

---

* In this report tons are of 2,000 lb.; weight of ore is dry weight.

† Quantities of copper are stated in avoirdupois pounds, showing contents in fine copper. Quantities of silver and gold are stated in troy ounces of fine metal. The converter bars being in an unrefined state, the quantities of copper and silver given are calculated by Anaconda assays; there is a slight loss in copper and a considerable gain in silver in refining on the seaboard, the assays of silver in converter bars being always too low.

The profit and loss account for the two years of the company's existence is as follows:

	Year Ending June 30, 1897.	Year Ending June 30, 1896.
To copper, silver and gold on hand July 1, 1896	$4,888,020.26	$748,294.1
Mining—all expenditures; schedule A	5,725,999.08	5,071,677.61
Reduction works—all expenditures; schedule B	5,812,517.60	5,616,516.78
	$11,538,517.53	$10,688,194.39
Deduct profits on operations of subsidiary departments	556,505.08	829,485.89
	$10,982,012.45	$9,858,708.50
Freights—railway and ocean	681,692.57	586,922.15
Refining charges on seaboard	1,058,824.93	1,248,214.29
Interest on advances	116,115.88	135,974.81
General expenses:		
Anaconda	(*a*)	46,350.89
New York	77,679.31	62,718.56
Balance, being profit for the year carried to balance sheet	5,136,048.00	4,258,514.70
	$22,940,893.85	$16,945,697.91
By sales—		
Copper, 120,864,097 lb	$13,003,955.10	$8,578,177.29
Silver, 6,057,067 oz. fine	3,881,551.75	3,055,184.41
Gold, 18,511 oz. fine	382,259.70	296,542.29
	$17,267,766.55	$11,929,903.99
Royalties, rents and dividends	151,595.32	127,773.66
Copper, silver and gold on hand June 30, 1897	5,521,031.48	4,888,020.26
	$22,940,393.35	$16,945,697.91

(*a*) These expenses are included this year under mining and reduction works expenses.

The detailed costs at the reduction works are given in the following table:

CONCENTRATING.	
Labor	$426,029.81
Power house expenses	296,403.40
Electric light	17,139.29
Tools	830.95
Oil	5,200.38
Sampling mill	33,831.20
Repairs to machinery	97,144.56
Supplies, etc	153,566.63
	$1,030,146.22
CONVERTING.	
Labor	$427,155.59
Machinery and repairs	69,488.66
Tools and sundry supplies	46,783.60
Electric light, etc	3,664.07
Power	55,410.27
Fuel	211,663.30
Repairs to furnaces	60,034.45
General repairs	2,701.40
Stable expense	2,121.50
Assay office expense	2,968.37
Taxes	1,922.47
Freight and switching	10,797.80
Blast furnace operating expenses	174,535.42
Blast furnace construction	2,540.90
Silica stable	1,462.67
General expense	17,890.81
	$1,091,141.28
REFINING.	
Labor	$127,231.74
Power	192,061.83
Acids and other supplies	129,444.64
Recasting scrap anodes	35,078.47
Machinery and repairs	8,318.09
Remodeling old silver mill to regenerating plant	25,690.75
Construction boiler house	15,472.88
Taxes	3,122.46
Freight and switching	1,234:58
Electric light	453.17
Stable expense	1,918.50
Assay office expense	10,371.50
General expense	12,451.55
	$562,849.56

SMELTING.	
Labor	$790,684.11
Power house	146,853.48
Coal	1,412,218.37
Electric light	17,139.30
Tools	1,829.06
Oil	5,122.32
Repairs to machinery	59,000.02
Supplies, etc	200,181.96
	$2,633,034.63
CASTING.	
Labor	$85,036.83
Molds, ladles, etc	9,492.80
Sundry supplies	2,167.41
General repairs	7,832.78
Electric light	958.56
Taxes	518.46
Freight and switching	4,158.00
Fuel	38,164.01
Poles	8,465.40
Stable expenses	823.85
Assay office expense (proportion)	2,475.27
General office expense (proportion)	6,491.37
	$166,084.73
Less—Charged refining for recasting scrap anodes	35,078.47
	$131,006.26
MELTING.	
Labor	$347.13
Coal and freight	1,654.81
Poles	27.00
Supplies, etc	1,056.59
	$3,185.53
REDUCTION OF SILVER MUD.	
Labor	$26,393.57
Coal	3,564.07
Wood	3,074.62
Acid	15,619.66
Express on bullion	16,673.86
Machinery repairs	807.56
Sundry supplies, etc	10,348.00
	$76,481.34

The total expenditure at reduction works, including custom ores purchased ($174,809.10), matte house torn down and credited to capital ($25,000), new offices at Anaconda, charged to construction ($31,308.25), and construction of silver mill No. 2 ($53,555.44) was $5,812,517.60; from this one-half the products of the subsidiary departments ($278,252.24) are deducted, leaving the total net cost $5,534,265.06.

The production of the Anaconda and Syndicate mines from the beginning, based upon Anaconda assays and weights, has been as below:

Period.	Tons of Dry Ore sent to Reduction Works.	Shipments from Anaconda.		
		Copper. Tons of 2,000 lb.	Silver. Fine oz.	Gold. Fine oz.
Approximate shipments of ore sold before 1884	38,410	16,500		
In 1884	30,347	1,948		
In 1885	227,447	20,231		
In 1886	198,535	16,429		
In 1887	359,553	29,621		
In 1888	455,130	33,558		
In 1889	488,328	30,905		
First four months 1890	189,126	12,749		
	1,981,876	161,931	7,000,000	
May 1, 1890, to Feb. 1, 1891	427,751	23,725	1,581,363	5,412
Feb. 1, 1891, to Oct. 27, 1891	115,846	12,417	856,423	2,700
Oct. 27, 1891, to Dec. 31, 1892	1,037,910	55,955	3,766,949	16,188
In 1893	569,478	40,723	3,466,766	22,072
In 1894	836,528	49,340	4,899,374	22,956
First six months 1895	484,160	24,962	2,798,400	10,632
Year 1895-6	1,276,156	53,518	5,308,955	18,300
Year 1896-7	1,425,749	66,182	5,985,837	20,380
	8,154,954	488,753	35,584,067	118,634

NOTES—Prior to 1890 the given quantity of 7,000,000 oz. of silver is only a very rough approximation. In these years very little was received for the gold contents of the matte then shipped.

The mines were first worked, commencing in about 1880, for silver, yielding a product of a few hundred thousand ounces of that metal, which is not included in above statement.

In the statement of tons of ore reduced is included "custom ores," but most of ore so bought came from tributers working in some of the Anaconda mines.

DETAILS OF MINING EXPENDITURE FOR THE YEAR ENDING JUNE 30, 1897.

	Mountain Con. Group.	Anaconda Group.	Total.	Total Per Ton.
Assay	$1,551.31	$1,208.31	$2,759.62	$0.00238
Candles	27,818.77	23,765.52	51,079,29	0.03668
Charcoal	4,801.75	5,629.94	10,431.69	0.00782
Coal	70,343.25	64,512.71	134,855.42	0.09613
Donations	13,431.50	1,005.34	14,436.84	0.01067
Expense account	55,882.90	47,580.58	103,463.48	0.07388
Electric lighting, etc	6,285.44	4,415.09	10,700.53	0.00801
Freight on ore	266,414.85	248,512.69	514,927.54	0.36604
Fuse and caps	12.126.02	9,779.10	21,905.12	0.01597
Labor, including salaries	1,703,358.31	1,588,087.96	3,291,446.27	2.33756
Mess	1,176.90	1,715.85	2.892.75	0.00247
Printing, stationery, etc	1,412.33	1,450.49	2.862.82	0 00245
Oil	9,617.86	7,598.96	17,216.82	0.00257
Powder	59,115.15	45,096.27	104,211.42	0.07441
Supplies	111,999.68	37,735.81	149,735.49	0.10673
Stable	2.681.59	2,917.98	5.599.57	0.00439
Timber	286,276.38	202,057.35	488,333.73	0.34715
Tools	13,565.26	4,562.14	18.137.40	0.01326
Wood	14,578.96	24,125.83	38,644.79	0.02785
Precipitating expense		28,368.32	28,368.32	0.02056
Personal injuries		32,046.32	32,046.32	0.02317
Taxes	30,774.83	30,817.63	61.592.46	0.04414
Machinery, fittings, repairs and development work	119.802.89	113.017.72	232.820.61	0.16573
Construction account	132.049.88	255,481.75	387,531.63	0.27558
Total	$2,944,510.81	$2,781,489.12	$5,725,999.93	$4.06570

Deducting one-half of profits of subsidiary departments ($278,252.54), the net expenditure was $5,417,747.39.

An analysis of these figures shows that the sales of copper, silver, and gold amounted to $17,267,766, of which 75.4% was realized from copper, 22.5% from silver, and 2.1% from gold. The copper brought 10.76c. per lb., the silver 62.43c. per oz., and the gold $20.65 per oz. The sales of copper and gold were considerably less than the production; the sales of silver were a little more. The net cost of production, including mining and reduction expenses, freight, refining charges at seaboard, interest on advances and general expenses, less profits on operations of subsidiary concerns, was $12,916,325. Charging this entirely to copper (using the figures of production, not those of sales), the cost was 9.76c. per lb. In 1895 it was 11.15c. per lb. The improvement is due to the much greater production, operating expenses not having increased in the same proportion, and to many economies that have been introduced at the mines and works.

Calculating the entire production for the year at the average value of the products sold, it appears that 77.5% was in copper, 20.2% in silver and 2.3% in gold. Distributing the cost of production in the same proportion and dividing respectively by the quantity of each substance produced, it is found that the copper cost 7.56c. per lb., the silver 43.95c. per oz., and the gold $14.577 per oz. These figures are not exact, because the amounts of copper and silver actually realized differ slightly from the amounts calculated from Anaconda assays, but the difference would hardly affect more than the last place of decimals. The copper actually put on the market in the last two years was probably about 0.5% less than in the statement of production; the sales of silver were, on the other hand, considerably more, since the assays of silver in converter bars are always too low.

The 1,425,749 tons of ore sent to the reduction works yielded an average of 4.64% copper, 4.16 oz. silver per ton, and 0.014 oz. gold per ton. The grade of the crude ore shipped from the mine is not given. It was probably in the neighborhood of 6% copper and 5.5 oz. silver per ton.

The total expenditure for mining was $5,725,999, from which should be deducted one-half of the profits from the subsidiary departments, which amounted to $278,252. Since, however, this deduction is not distributed among the various divisions of mining expense we shall refer costs per ton to the gross figure. Using this as a basis it appears that the gross cost of mining was $4.0657 per ton, the transportation of the ore and the cost of development work and construction being included. The labor and mess account formed 57.53% of the total; timber, 8.25%; fuel (wood and coal), 3.3%; explosives, 2.20%; lighting (electric lamps and candles), 1.08%; machinery, fittings, repairs, development work and construction account, 10.81%, and freight on ore, 9%. These items account for 91.90% of the total. The remainder was for assay office expenses, general supplies and general expenses (including taxes, amounts paid to injured workmen, etc.). Referring the cost of mining to the net figure $5,447,747, it works out to $3,821 per ton, and after deducting the cost of freight to Anaconda (36.1c. per ton) the final result is $3.46 per ton.

The amount of ore delivered to the smelting works not being stated, it is only possible to refer their costs to the crude ore, which does not throw much light upon the actual technical results. Smelting came to $1.85 per ton of ore, converting to 76.5c., melting to 0.2c., casting to 9.2c., refining to 39.5c., and reduction of silver mud to 5.4c. These figures are all a little over the actual cost, since no deduction for the profits of subsidiary departments has been made.

The Butte & Boston company having been reorganized was again a producer in 1897. The report of C. W. Goodale to the reorganization committee in August, 1896, showed that the amount of ore extracted from the Silver Bow mine up to the suspension of operations in February, 1896, was 601,665 tons. The percentage of copper was 8.47 in 1893, 6.12 in 1894, 4.14 in 1895, and 4.69 in 1896. The average cost of mining was estimated at $3.78 per ton, including exploration and development. The shipments from the Gray Rock group of mines amounted to 172,593 tons, with 8.10% copper in 1893, 8.25% in 1894, and 6.60% in 1895. At the time the examination was made there were estimated to be 45,000 tons of ore, valued at $88,750, in sight in the Silver Bow and 16,909, or $29,421, in the Gray Rock.

The total receipts of the Boston & Montana Consolidated Copper and Silver Mining Co. in 1897 from sales of copper, silver, gold, and bluestone were $6,949,097. The total expenses were $3,932,660, of which $3,274,580 were incurred at Butte and Great Falls and the remainder was expense of handling copper, including freights, commissions, etc. The production of copper was about 60,000,000 lb. The ore treated in 1897 averaged 2% less copper than that treated in 1896. At the end of the year the ore reserves in the mine were estimated to be about 1,300,000 tons. The cost of mining and smelting is said to have been reduced in 1897, but no figures as to this are given in the report of the directors. At the electrolytic plant the production has been brought to 3,700,000 lb. per month when maximum current is used.

The Washoe Copper Mining Co. continued developments in the Moonlight, Stella, and Poulin mines. The last of these is already opened to a depth of 1,200 ft., and depth is being gained rapidly on the Stella. It is expected that this company will soon commence the erection of a smeltery. This is commonly said to be a second Anaconda, and is owned chiefly by Messrs. Haggin & Daly.

Nevada.—The Boston & Nevada Copper Mining Co. erected a blast furnace of 40 tons per day capacity at Yerrington to treat the ore from its mine in Mason Valley. The furnace (a 42-in. water jacket) was blown in September 28 and turned out a small amount of matte. The Adelaide copper mine at Golconda, in Humboldt County, was developed. A promising vein of copper ore was discovered on Lone Mountain, in Elko County.

South Dakota.—Considerable prospecting for copper has been done in the vicinity of Custer's Peak in the Black Hills. The existence of copper in this district is not of new discovery, but the ore is of low grade and heretofore there have not been proper transportation facilities. A supply of copper ore in the Black Hills is greatly needed for the matte smelting works in operation there, which have heretofore been obliged to bring ore from Butte, Mont., to assist in the smelting of the non-cupriferous gold-bearing pyrites, which is abundant in the Black Hills.

Utah.—A promising discovery of copper pyrites ore of workable grade was made in the Highland Boy mine in Bingham Canyon. The Beaver Lake district, in Beaver County, and the La Sal Mountains in San Juan and Grand counties, have also given evidences of good copper ore, especially the latter, where the new deposits have excited considerable interest.

Copper smelting is done in Utah at the works of the Germania Smelting Co. at Salt Lake City, which in 1897 produced 2,582,814 lb. of crude copper (95%) with 458 oz. gold and 295,466 oz. silver. The smelting at these works is done in reverberatory furnaces. A comparatively small amount of copper is shipped out of the State in the form of matte and ore.

THE WORLD'S COPPER PRODUCTION, 1894–97. (a)

Countries.	1894.		1895.		1896.		1897.	
	Tons of 2240 Lb.	Metric Tons.	Tons of 2240 Lb.	Metric Tons.	Tons of 2240 Lb.	Metric Tons.	Tons of 2240 Lb.	Metric Tons.
Australasia	9,000	9,144	10,000	10,160	11,000	11,176	17,000	17,272
Austria-Hungary	2,120	2,154	1,310	1,331	1,285	1,306	1,645	1,671
Bolivia	2,300	2,337	2,250	2,296	2,000	2,032	2,200	2,235
Canada	3,786	3,847	3,924	3,987	4,190	4,225	5,905	5,999
Cape of Good Hope:								
Cape Company	5,150	5,233	5,350	5,436	5,470	5,558	5,290	5,375
Namaqua	1,500	1,524	1,730	1,758	1,980	2,012	2,150	2,215
Chile	21,340	21,681	22,075	22,428	23,500	23,876	21,900	22,250
Germany:								
Mansfeld	14,963	15,202	18,860	18,098	18,265	18,557	17,960	18,247
Other mines	2,210	2,260	1,695	1,722	1,800	1,829	2,185	2,220
Italy	2,500	2,540	2,500	2,540	3,400	3,454	3,400	3,454
Japan	20,050	20,371	18,430	18,725	21,000	21,336	23,000	23,368
Mexico:								
Boleo	10,371	10,537	10,600	10,769	9,940	10,099	10,170	10,334
Other mines	1,400	1,422	1,170	1,189	4,032	4,096	4,868	4,945
Newfoundland	1,900	1,930	1,800	1,829	1,800	1,829	1,800	1,829
Norway	1,785	1,813	2,685	2,728	2,500	2,540	3,450	3,505
Russia	5,000	5,080	5,000	5,080	5,000	5,080	5,000	5,080
Spain and Portugal:								
Rio Tinto	32,689	33,215	32,985	33,513	34,501	35.055	33,900	34,442
Tharsis	11,000	11,177	12,380	12,688	11,040	11,217	12,000	12,192
Mason & Barry	4,200	4,267	4,100	4,166	3,381	3,435	4,300	4,369
Sevilla	1,170	1,188	1,050	1,069	1,025	1,041	810	823
Other mines	4,805	4,882	4,300	4,369	3,400	3,455	3,050	3,099
Sweden	500	508	515	523	500	508	554	554
United Kingdom	400	406	400	406	500	508	550	559
United States	161,510	164,194	172,524	175,294	208,760	212,112	227,763	231,421
Venezuela	2,500	2,540	....	....	*Nil.*	*Nil.*	*Nil.*	....
All other countries	670	680	635	645	840	853	1,200	1,219
Totals	324,859	330,132	334,268	339,699	381,109	387,207	412,050	418,677

(a) The figures in this table are taken from the annual metal circular of Henry R. Merton & Co., except where returns have been received by THE MINERAL INDUSTRY direct from producers.

Australia.—The copper-mining industry in New South Wales experienced a great revival in 1896, due especially to the reopening of the mines of Cobar, though operations were extended at Captain's Flat, Nymagee, Mount Hope, and Burraga. The Great Cobar Mining Syndicate owns the largest copper mines in New South Wales. It has now two 60-ton water-jacket blast furnaces in operation, its mines and smelting works giving employment to about 450 men. Its production in 1896 was 66,431 tons of ore, which yielded 2,650 tons of ingot copper. The matte is refined at Lithgow, where works were recently erected. The production of the Great Cobar mine for the year ended June 30, 1897, was 63,864 tons of ore, yielding 2,699 tons of copper (4.22%), 30,424 oz. fine silver (0.48 oz. per ton), and 12,414 oz. fine gold (0.194 oz. per ton).

The next most important copper mining district of New South Wales is in the vicinity of Burraga in the Abercrombie Mountains, where the principal mine is owned by the Burraga Copper Mining Co. The ore is smelted to matte at the mine, and the matte is shipped to Lithgow for refining.

The total exportation of copper from New South Wales in 1896 was 4,453 tons, against 2,793 tons in the previous year. Nearly all of the copper ore in the colony is now being smelted at home. The Lake George copper mine, in which the Exploration Co., Ltd., of London, is largely interested, was put in operation toward the end of 1897. The ore averages about 1.9% copper, 4.5 oz. silver, and 0.1 oz. gold per ton.

Only one serious attempt, 10 or 12 years ago, has been made to work copper deposits in New Zealand, namely, that at the Champion mine in the Aniseed Valley, Nelson Province. It is now thought that with recent improvements in metallurgical practice the ore (chrysocolla and copper glance on the surface, changing to pyrites, with pockets of native copper in depth) can be worked at a profit. The ore formerly extracted from the mine averaged 7.5% copper.

A company has been organized to develop the Chillagoe copper mines in Queensland, about 100 miles west from Herberton, the terminus of the Cairns Railway. A company has also been organized to construct a line of railway from Herberton to the mines. It is expected that these mines will be in active operation before the end of 1899.

There was great activity in prospecting for copper in South Australia in 1897, and numerous lodes of much promise were discovered in the northern districts. These exist chiefly within a semicircle of 150 miles radius around Port Augusta, and east of the meridian passing through that place. Important discoveries have been made in the Beltana district and on the Wilpena run. Southeast of this district and about 50 miles from Broken Hill, N. S. W., there is a group of mines from which gold-bearing copper ore averaging 20% copper has been shipped to the smelters at Wallaroo. South Australia was formerly a large producer of copper, and it is now considered probable that there will be a revival in the production. The exports of copper and copper sulphate from Wallaroo since 1894 have been as follows:

Year.	Ingot.		Bluestone.	
	Tons.	Value.	Tons.	Value.
1895	5,072	£221,700	45	£766
1896	4,617	216,440	75	1,186
1897	4,706	233,018	113	1,798

The Wallaroo & Moonta Smelting Co. intends to start treating lead ores at an early date. The present intention is to erect, in conjunction with the existing works, a plant which will treat about 300 tons of ore a week.

Owing to the success of the Mt. Lyell company there was great activity in developing mines in that district of Tasmania in 1897, and some important discoveries were made. Late in the year a large body of ore of good grade in copper was discovered in the North Mt. Lyell mine. At the end of the year the deposit had been opened for a length of 110 ft. and a width of 40 ft. The ore contains enough silica to be suitable for smelting, and a good deal of it is said to contain as much 20% copper. This discovery had the effect of stimulating prospecting at some of the other mines where work had been languishing. Early in

1898 a large deposit of copper ore was opened in the Crown Lyell mine. Up to the end of February it had been followed to a depth of 60 ft., to a width of 100 ft., and a length of 450 ft. A good deal of this ore averages as high as 15% copper. Discoveries of copper ore assaying from 10 to 16% copper, 4 oz. silver, and $3 gold per ton were made in the vicinity of Lake Dora, north of the Mt. Lyell field, but the deposits do not so far appear to be extensive.

At the annual meeting of the Mt. Lyell Mining and Railway Co., November 26, 1897, it was reported that furnaces Nos. 3, 4, and 5 were blown in June 23, August 11, and September 13, respectively, and had continued to run together with Nos. 1 and 2 with but slight interruption. The amount of ore smelted during the six months was 41,507 tons. The converter plant had proved more than capable of treating the output of the five furnaces, the production of blister copper during the semester (ended September 30) having been 2,953 tons. The first five furnaces and converters having proved in every way adapted to the economical treatment of the ore, it was decided to proceed at once with the duplication of the plant. The installation of an electrolytic plant is also contemplated.

The cost of production per ton of ore mined was as follows: Mining, 1s. 4.88d. per ton; removal of overburden, etc., 2s.; smelting, 16s. 2.44d.; converting, 3s. 7.78d.—total, £1 3s. 3.1d. The profit for the half-year amounted to £66,724.

The quantity of ore mined was 43,099 tons, of which 38,890 tons came from the open cut and the remainder from underground. The furnaces treated 41,507 tons of ore, 1,042 tons of fluedust, 9,083 tons of first matte, and 3,464 tons of converter slag. The converters treated 5,745 tons of matte, yielding 2,953 tons of blister copper, which contained 2,919 tons of fine copper, 271,036 oz. of silver, and 13,034 oz. of gold.

The Tasmanian Copper Co. contemplates the construction of a smeltery to employ the pyritic process. The design of the works includes two furnaces 180×36 in. for first concentration and one of 180×40 in. for second concentration. With these furnaces it is expected to smelt upward of 350 tons of pyritic ore per diem, with a matte production of about 28 tons. The ore is expected to average between 3 and 4% copper. It is estimated that the gold and silver contents of the ore will cover the cost of production.

Canada.—The production of fine copper in 1897 was 13,300,802 lb., against 9,393,012 lb. in 1896. Copper is produced in Ontario at Sudbury, in Quebec at Capelton and Eustis, near Sherbrook, and in British Columbia at various points. There is no copper refining industry in Canada at present, except at one works in British Columbia, and most of the production is exported to the United States in the form of ore, raw or roasted, and matte. A comparatively small amount of copper-bearing material is shipped from British Columbia and the Sudbury district to England, whither the blister copper of the Hall Mines, Ltd., is also sent. With respect to the operations of the Sudbury mines in 1897 and previous years, special reference should be made to the article on "Nickel and Cobalt" elsewhere in this volume.

The more part of the copper production of British Columbia is turned out by the British Columbia Smelting and Refining Co., which operates the works at Trail Creek, and the Hall Mines, Ltd. (Silver King mine). The production of the Trail Creek works goes chiefly to Butte, Mont., in the form of matte. The company, however, installed a refinery in 1897 and turned out some fine metal. The Hall Mines converts its product into blister copper, which is shipped to Wales. The monopoly of American ore buyers in British Columbia was disturbed by the appearance of agents of Vivian & Sons, a freight rate of $8.50 per ton from Vancouver to Swansea having been obtained, which enabled them to compete successfully in some cases with American buyers.

In 1897 the Hall Mines, Ltd., smelted 49,314 tons of ore, yielding 3,676 tons of matte, which contained 1,703 tons of copper, 957,206 oz. silver, and 708 oz. gold. According to the report of the directors for the year ending September 30, 1897, the gross surplus of income over expenditures amounted to £30,357. The new blast furnace which was completed in July effected considerable saving in the cost of smelting. The converting plant was completed in May and since then has done good work. A second reverberatory smelting furnace and a roasting furnace are in course of construction. The cost of mining averaged $4.66 per ton, smelting $4.71, general expenses $0.36, London expenses $0.44—total, $10.17; profit, $3.13. The amount of ore mined and smelted was 46,903 tons.

In the Province of Quebec the production of copper pyrites at Capelton in 1897 was 36,815 long tons, of which 29,512 were shipped to the United States, a small cargo to England, and the remainder was used on the spot by the Nichols Chemical Co. for the manufacture of sulphuric acid, which is used largely in the preparation of superphosphate from Canadian apatite. The roasted ore is exported to the United States. The Eustis mine is opened to a depth of 2,300 ft., and the Albert mine of the Nichols company to a depth of more than 2,000 ft. The average grade of the ore is about 3.25% copper.

The first important discovery of copper in Newfoundland was at Tilt Cove in Notre Dame Bay in 1857, but mining operations were not seriously begun there until 1864. Since that time the mines have had a checkered career, but have produced about 20,000 long tons of fine copper. In 1897 they made an output of over 70,000 long tons of ore at a profit of £28,000. The other copper deposits of the island exist at Bett's Cove, discovered in 1874, and at Little Bay (1877). There are other promising deposits which have not yet been opened. Up to the end of 1896 Newfoundland had exported, according to the official returns, which, however, are known to be incomplete, 460,311 tons of copper ore, 50,730 tons of regulus, and 5,240 tons of ingot. Allowing for unrecorded exports, J. H. Collins considers that 50,000 tons of fine copper is a reasonable estimate of the copper production of this island.

Cape of Good Hope.—The production of ingot copper by the Cape Copper Co. in 1897 was 5,843 long tons, against 6,538 in the previous year. The output fell off, owing to alterations in the calcining plant where automatic rake furnaces were substituted for hand reverberatories. In addition to the above output there was each year a make of about 4,000 tons of bluestone from Newfoundland poor sulphides and an extraction of 3,000 oz. gold and 4,000 oz. silver.

Chile.—The exports in 1897 were equivalent to 21,928 long tons of fine copper, against 23,535 tons in 1896, and 22,613 tons in 1895. The Chilean and Bolivian statistics for a series of years, as reported by Jackson Bros. of Valparaiso, are given in the following table:

EXPORTS OF COPPER FROM CHILE AND BOLIVIA.

	1888.		1889.		1890.		1891.		1892.	
	Quintals.	Fine.	Quintals.	Fine.	Quintals.	Fine.	Quintals.	Fine.	Quintals.	Fine.
Bar copper.......	646,444	646,444	436,935	436,935	521,183	521,183	396,453	396,453	432,693	432,693
Copper regulus...	85,517	40,627	148,099	63,462	109,290	48,629	56,217	23,851	184,509	61,694
Copper ores......	12,586	2,356	131,254	34,565	88,181	6,670	94,240	18,380	28,450	3,661
Total.	....	689,427	....	534,962	....	576,482	....	438,684	....	498,048

	1893.		1894.		1895.		1896.		1897.	
	Quintals.	Fine.	Quintals.	Fine.	Quintals.	Fine.	Quintals.	Fine.	Quintals.	Fine.
Bar copper......	391,884	391,884	417,133	417,133	443,532	443,532	459,380	459,380	418,665	418,665
Copper regulus..	111,073	49,542	87,007	16,126	20,547	8,251	67,945	34,506	86,538	42,661
Copper ores.....	173,903	29,617	212,909	37,524	192,027	35,440	133,712	24,139	94,550	20,786
Totals........	....	471,043	....	470,783	....	487,223	....	518,025	....	482,112

Germany.—As heretofore the chief part of the copper production of Germany continues to be furnished by the Mansfeldschen Kupferschieferbauenden Gewerkschaft of Eisleben. The last published report of this company is for the year 1896. In this year the amount of ore raised was 650,985 metric tons, which was 85,154 more than in 1895. The production of copper increased 3,457 tons, amounting to a total of 18,536, of which 651 were electrolytic. The silver production was 100,357.217 kg., *i. e.*, 24.479.596 more than in 1895. At the ore roasting works there was a production of 10,004 tons of sulphuric acid of 50° B., 2,890 of 55° B., 1,160 of 60° B., and 3,147 of 66° B., this being derived from the roasting of 45,418 tons of matte. There was a small saving of minor products, including 208 tons of silver-lead, and 19,723 kg. of nickel vitriol.

Mexico.—As heretofore, the chief part of the production of copper in this Republic was derived from the Boleo and adjacent mines in Lower California. The mines in the vicinity of Aguas Calientes, which supply the large smelting works at that place, have not proved so productive as originally expected, and it has been necessary to import low-grade matte from the United States to assist in the treatment of gold and silver ores. The Rio Tinto mine in Michoacan was sold to an English company, which it is said intends to erect a smeltery. English investors also became interested in some other copper mines in the same State. There is a small production of copper in Mexico in matte by the lead smelters, most of which is exported to the United States for treatment.

The Compañia de Cobre del Boleo in the fiscal year ended June 30, 1897, produced 172,330 metric tons of ore which assayed from 5 to 11% copper. The seven furnaces smelted 170,965 tons, yielding 9,986 tons of matte and 3,612 tons of black copper, which corresponded approximately to 10,330 tons of pure copper. The consumption of coke was 22,640 tons, while 1,505 tons of coal were burned under the boilers.

Norway.—The copper mines and works of Norway had a very prosperous year in 1897. There were about 2,000 men occupied in the industry and the exportation of pyrites amounted to 90,000 metric tons, beside 1,450 tons of ore with

20% copper, and about 1,000 tons of ore of lower grade. The production of ingot copper at the Röros and Sulitelma works was 1,025 metric tons. The copper produced in foreign works from Norwegian ore is estimated at about 1,975 tons, making the total copper production of Norway 3,000 tons. The new electric plant at Röros was completed in November. The Sulitelma works, which formerly produced nothing but copper matte, is now equipped with a Bessemer plant, and since March produced 342 tons of ingot copper. The mines at Aamdal in Telemarken produced 1,450 tons of pyrites with 20 to 21% copper. Alten in Finmarken produced 400 tons with 10% copper. Bösmo, close to the Arctic circle, produced 20,000 tons with about 50% sulphur and a small tenor in copper. During the year the mines at Bösmo were purchased by the Societe Anonyme des Pyrites de Bösmo of Antwerp from the Swedish company which had previously operated them.

Portugal.—The amount of ore raised in 1897 by Mason & Barry, Ltd., was 177,549 long tons against 192,428 in 1896. Shipments amounted to 267,290 tons against 202,696 in the previous year. The amount of ore sold for its sulphur value was 272,498 tons against 205,206 in 1896. The profit for the year was £45,088.

Spain.—The production of copper was stimulated by the active demand for the metal and the high prices. Nearly all the important companies maintained their production, only one—the Compañia de Sotiel Coronada—reporting a considerable decrease, its output having been 68,725 metric tons of ore and 1,425 tons of precipitate, against 103,311 tons ore and 2,467 tons precipitate in 1896. The exports from Spain in 1897 were 822,570 tons of copper ore, an increase of 193,030 tons over 1896; 36,055 tons of precipitate, an increase of 2,061 tons; and 15,432 tons of matte, a decrease of 3,391 tons. The exports of iron pyrites were 217,545 tons in 1897, a decrease of 182,943 tons. The difference was largely due to the smaller production of the Aguas Tenidas Co. which mined only 155,000 tons in 1897, against 205,000 tons in 1896.

The quantity of ore extracted in 1897 by the Rio Tinto Co., Ltd., was 1,388,026 long tons, averaging 2.81% copper, of which 575,733 tons were for shipment and the remainder for local treatment. The copper production by treatment at the mines was 20,826 tons and the copper in pyrites shipped amounted to 13,098, a total of 33,924. The sales of refined copper were 19,894 tons, copper in bluestone 1,050, copper in pyrites 12,487, total 33,431. The stock of copper at the Cwmavon works at the end of the year amounted to 4,896 tons, while the reserve heaps at the mines contained 111,406 tons of fine copper. The profit on the sale of the production in 1897 was £987,524. The property of this company is situated in the Province of Huelva, in the south of Spain, and has an area of about 16,000 acres, containing enormous deposits of low-grade pyrites. It is estimated that at the present rate of production there is 70 years' output of ore in sight. Under the terms of the concession only about 200,000 tons can be calcined at the mines per annum. About 550,000 tons are exported and the remainder of the production is thrown on the reserve heaps, where it is spread over a large surface and water is poured upon it from reservoirs. This, together with the rainfall, leaches the copper sulphate produced by the gradual oxidation of the ore. The solution thus obtained collects in pools, where it is precipitated by scrap iron. The precipitate is shipped to the company's works in South Wales for refining. The reserve heaps yield a large proportion of the company's output of copper and at a cheap price, the metal in these heaps standing in the company's books at only £4 6s. 10d. per ton. The total amount paid by this company in dividends from 1879 to 1896, both years inclusive, was £5,757,500.

The amount of ore raised by the Tharsis Sulphur and Copper Co., Ltd., was 565,949 long tons in 1897 against 557,577 in 1896. The increase was entirely in ore for export. Copper extraction at the mines was favored, however, by an increased rainfall. The shipments of pyrites were 310,702 tons against 239,725 in 1896. The shipments of copper precipitate were 8,906 tons, against 7,538 in the previous year. The actual gross profits on the year's operations were £383,972, while the net profits were £310,957. Up to the end of December, 1897, this company had paid dividends to the amount of £6,008,432.

United Kingdom.—The Knockmahon and Tankerstown mines in County Waterford, Ireland, were examined with a view to reopening them, and it was reported that they might be worked profitably under present conditions.

THE COPPER MARKETS IN 1897.

New York.—So far as the copper industry was concerned, 1897 was a very satisfactory year. The consumptive demand was steadily good, and exports were 128,851 long tons, or greater than in 1896. Home consumption, especially during the last months of the year, experienced a healthy increase.

Copper continues to be more and more used for the transmission of electricity, while the consumption by the sheet and brass industry shows a steady progress. The enormous expansion in the shipbuilding trade has an important influence, and with the modern methods of housebuilding, large quantities of the metal are now finding use in that direction. Great improvements have also been made in the trolley system, where the dangerous overhead method is being supplanted by the underground plan, which has now for several months been in operation in the most crowded thoroughfares of New York and other cities; and the time is not far distant when the cable system will be abolished entirely in favor of electricity.

Manufacturers in Europe were very busy, and at the end of the year had orders on their books which would keep their mills going at full speed for several months. In the United States conditions were somewhat different. Early in the year manufacturers encountered great difficulties, as orders were not at all plentiful, and consumption in general left a great deal to be desired. The wire business became very good during the summer and fall months, and in other directions, also, copper was freely consumed, so that at the end the copper industry was on a sound footing.

With the great progress made during the last 10 years in reducing the cost of production and refining, and with the high values ruling for copper, the profits of the producing companies have been very large, and capitalists now pay a great deal of attention to copper properties. Yet the development of these always takes a long time, and rather heavy amounts have to be expended before any returns can be expected. As long as the visible supplies do not become materially larger than they have been of late, there is little chance that prices will decline to any appreciable extent.

January opened with a firm tendency, Lake being quoted at 11⅝c. and electrolytic at 11⅛@11¼c., and, with a continued good demand, especially from abroad, prices hardened during the month, and advanced quickly to 12c. and 11½c., respectively. These prices, which proved to be the highest of the year, were maintained during February. Then the demand slackened, and prices slowly crumbled off during March, when 11¾c. and 11⅛c. were freely accepted. Toward the end of that month there was a spurt, resulting in an advance of about ¼c., but during April a rather heavy decline set in, as it became known that producers were accumulating stocks.

At the beginning of May 11¼c. was accepted for Lake and 10¾c., for electrolytic copper; and then a further drop came, when the Calumet & Hecla Co. made one of its regular sales, marketing a very large quantity at 11c.

No important ups and downs were noticeable for the next two months. Deliveries were good, and prices remained very steady until the beginning of July, when a temporary advance of ¼c. set in. But this was not of long duration, and 11c. for Lake and 10⅝c. for electrolytic copper were the ruling figures during the remainder of July and August, and it was only at the end of the latter month that a very good demand for both home trade and export brought prices up to 11¼@11⅜c. and 10⅞@11c. respectively. It was then confidently expected in most quarters that the fall trade would show such an expansion that a further rise in prices would take place, and most producers were rather stiff, holding back with sales. This in the end led to the contrary of what was anticipated, and at the close of October the prices of 11c., and 10⅝c. were established, soon to be followed during November by a further drop to 10¾c. for Lake and 10½@10⅝c. for electrolytic. At these figures the trade again supplied itself more freely, and a good, healthy tendency was noticeable, which brought prices back to 11c., at which figure the Calumet again made a sale early in December, for delivery over three or four months, with electrolytic copper again quoted at 10⅝@10¾c.

It will be noticed that rather large differences have again been established between the selling prices of Lake and those of electrolytic copper, which is due mainly to the very large production of the latter brands, while the production of Lake did not continue in the same proportion. In spite of the excellent quality of the leading brands of electrolytic copper now being brought on the market, Lake copper still commands a premium for certain uses, especially for cartridges, brass, etc. Yet it cannot be fully explained why the difference in price should be as large as it was throughout the entire year. Casting copper has been more or less relegated to the rear. The production is now rather small and irregular.

AVERAGE MONTHLY PRICES OF LAKE COPPER IN NEW YORK.

Year	Jan.	Feb.	Mar.	April	May.	June.	July.	Aug.	Sept.	Oct.	Nov.	Dec.	Year
	Cts.	Cts.	Cts.	Cts.	Cts.	Cts.	Cts.	Cts.	Cts.	Cts.	Cts.	Cts.	Cts.
1892	11.00	10.00	10.38	11.50	11.63	11.86	11.50	11.50	11.13	11.50	11.88	12.38	11.55
1893	12.13	12.00	11.88	11.88	11.00	11.00	10.88	10.00	9.88	9.75	10.00	10.25	10.75
1894	10.13	9.63	9.81	9.50	9.80	8.94	9.00	9.13	9.40	9.88	9.60	9.80	9.56
1895	10.00	10.00	9.75	9.75	10.25	10.63	11.25	12.00	12.25	12.00	11.00	10.50	10.76
1896	9.87	10.64	11.03	10.98	11.15	11.67	11.40	10.98	10.66	10.66	11.23	11.28	10.88
1897	11.75	11.92	11.80	11.48	11.03	11.11	11.11	11.16	11.30	11.13	10.88	10.78	11.29

London.—Last year opened with a fair consumptive demand for raw copper from England and the Continent, but the leading feature was the improvement in the statistical position, the figures for the first fortnight of January showing a decrease of over 1,500 tons in the visible supply. The growing strength in the American market, combined with the foregoing factors, stimulated speculative interest with the result of a brisk advance in g. m. bs. from £49 to £51 15s. for spot. Lake, after a sale at 11½c., by the Calumet & Hecla Co., rose to 12c., but toward the end of the month there was more eagerness to sell on the part of American producers, while the enhanced values of g. m. bs. led to realizations here, followed by a setback to £51.

The second fortnight of January showed a further decrease of 1,000 tons in stocks, and there was a rally during the second week of February in g. m. bs. from £50 16s. 3d. to £51 11s. 3d. This was, however, followed by a relapse to £50 10s. during the third week, the unsettled political outlook contributing to this result by checking speculation. On the other hand, consumption continued good, the large engineering works, especially in shipbuilding centers, being fully employed, and considerable quantities of refined and manufactured copper were disposed of, the electrical trades accounting for large parcels of high conductivity copper. The British Admiralty took a few hundred tons of "best-selected" copper, and India was a buyer of yellow metal squares, while a steady trade in "strong" sheets was going on. G. m. bs., after recovering, on the partial clearing up of the political horizon, to £51 13s., closed quieter again at £51 1s. 3d. for spot.

March, notwithstanding the persistence of consumptive activity, witnessed much speculative weakness, due largely to the state of political affairs in the East and South Africa, but also to the increase of 1,700 tons in visible supplies for the first fortnight, while the relative dearness of g. m. bs., as compared with refined copper, also tended to discourage operators. The consequence was a steady fall to £48 15s. for cash g. m. bs., and the month closed at that figure, with a further increase of 665 tons in supplies, and with Lake at 11¾c. The English government again bought "best selected" and also a further quantity in April, but the outbreak of hostilities between Turkey and Greece militated against any solid improvement in the speculative market, and a rally to £49 6s. 3d. was followed by a decline to £47 18s. 9d. on the last day of the month, while the mid-monthly improvement of 425 tons in the statistics yielded to a rise of 1,000 tons in the stock figures for the second fortnight. Lake had meanwhile gone down to 11c., at which one of the leading producers made a large sale to American consumers.

The first week of May witnessed a further fall to £47 1s. 3d. for cash g. m. bs., the three months' value being about 6s. 3d. per ton higher, the large offers and arrivals of American copper constituting a leading factor in the movement, but a reversal of this downward tendency was effected by the more hopeful aspect of political matters which presented itself near the middle of the month, and, after a further big sale of Calumet & Hecla at 11c., the price of Lake was raised to 11⅛@11¼c., and a brisk speculation in shares and g. m. bs. sent the value of the latter up to £49 7s. 6d., the rest of the month being less firm, with values fluctuating between the above figure and £48 10s. Electrolytic copper and "best selected" were both in good demand, and the scarcity of the latter resulted in enhanced values, £51 15s. to £52 15s. being the closing figure, while tough was £51 15s. to £52 5s. Manufactured copper remained steady at £59 for strong sheets, and India sheets at £55 to £56, with yellow metal braziers at 4⅞@5d. per lb. The statistical position was practically unaltered from the end of April figures.

Steady buying by consumers ushered in the month of June, and spot g. m. bs. changed hands early in the month at £49, and later at £49 12s. 6d., but the growth of American production, with the resultant increase in exports from that quarter, added to apprehensions of labor troubles in England acted as a damper upon the speculative market, and values eased off to £48 12s. 6d. spot and £49 three months, rallying again to £49 6s. 3d. spot and £49 12s. 6d. three months, but closing a shade lower. The decrease of 1,400 tons in the first fortnight was offset to the extent of 320 tons by the figures for the second half of the month. Although consumption was continued on a very active scale, especially on the Continent, and for electrolytic copper for electrical purposes, the activity was not adequately expressed in the volume of fresh purchases, which were of only moderate extent.

July was not marked by any noteworthy speculative movement, and, although consumption remained moderate, considerable nervousness was felt among producers, smelters and the trade generally, as to the effect and probable duration of the big engineering strike, which began to assume large proportions, involving an immense body of men, and threatening serious interference with the trade of the country.

Elements tending to counteract in some light measure, for the moment, the depression consequent on the strike, were the firmness of the American copper producers, the passing of the United States tariff bill, and the continued demand for copper of high conductivity. Lake remained at 11@11¼c. G. m. bs. declined to the extent of 20s. from £48 13s. 9d. for spot, and after minor fluctuations closed rather better than the latter figure, with three months at about 7s. 6d. contango. Tough copper closed at £50 7s. 6d.; best selected at £51 5s.; "strong" copper sheets, £58 10s.; India sheets, £54 and yellow metal squares, 4⅞d. The visible supply of copper showed an increase of about 1,400 tons for the month of July, American shipments having been very large.

The firmness of producers remained an element of strength in August, during which month the huge shipments of wheat greatly enhanced freight rates, and, consequently, the value of American copper. The home consumption was checked—though to a less extent than might have been expected—by the continuance and extension of the engineers' strike, but the Continent continued to buy pretty freely. The rise in American values stimulated the g. m. b. market, which closed at £49 2s. 6d. for spot, that is at nearly 30s. per ton better than it opened. Lake was now at 11¼@11⅜c., and the statistical position showed an improvement of about 800 tons for the month.

Despite the general depression in trade due to the prolongation of the labor war, copper continued in good request during September, at least as regards Continental consumption, and even in England the demand was fair. The taking-up of good quantities of g. m. bs. by consumers, combined with the favorable reports from the American market, kept our speculative market very steady, and we even improved, under the influence of speculative purchases, to £49 15s. for spot, with three months at a premium of 6s. 3d. per ton; but the month closed quiet with a reaction to £49 2s. 6d. for spot.

When October opened there was evidence of some abatement of the continental demand and of rather more disposition on the part of America to sell. The struggle between masters and men in the engineering trades was still going on and tending to sensibly limit the purchases of copper, especially for casting purposes. Lake declined to 11c. and g. m. b. fell from £49 2s. 6d. to £48 5s. for spot by the middle of the month, and the statistical figures for the first fortnight revealed an increase of about 1,300 tons in the visible supplies. A rally to £48 11s. 3d. was not maintained, and as the American offers had become pressing and led to considerable sales, the English producers likewise lowered their prices and the market generally closed flatter, with g. m. bs. at £47 16s. 3d. for spot and £48 1s. 3d. for three months. Trade in manufactured copper was dull, India in particular sending no orders worth speaking of. Early in November large quantities of Lake were sold at declining prices down to 10¾c., and English producers likewise reduced their prices, the margin between the values of raw and refined copper undergoing still further shrinkage. The arrangement of a conference between the federated engineering firms and the men raised hopes of a settlement of the dispute and the market improved from £47 8s. 9d. for spot to £47 18s. 9d. and later to £48 5s. speculative buying, in connection with the share market assisting the movement. Toward the close of the month, however, the tendency was rather easier, with consumptive demand dull, and cash g. m. bs. closed at about £48. Statistics were better than for some time previous, showing an improvement of 1,300 tons for the month of November.

December witnessed, first, the failure of the engineering conference, and later, its renewal with evidence of greater readiness to accept a compromise, but a little later the negotiations were broken off. One of the leading Lake companies. after making a large domestic sale, raised the price to 11c., and things began to look firmer again here also, despite the restricted home demand. During the last fortnight things became slacker again all round, but g. m. bs. closed, December 31, at £48 5s.@£48 15s. for three months; raw copper at £49 15s. to £50 for tough qualities; £50 15s.@£51 15s. for "best selected qualities." Manufactured was £59 for "strong" sheets; £55 10s.@56 for India sheets, and 4⅞d. for yellow metal squares.

THE METALLURGY OF COPPER IN 1897.

MATTE smelting, considered broadly, covers the entire subject of the smelting of copper sulphide ores, of which the first product, matte, is produced either in the reverberatory or blast furnace. Of iron matte smelting for the treatment of gold and silver ores which carry no copper, there is none in the United States at the present time, a small amount of copper (about 0.5%) now being used in the charge at the Deadwood & Delaware works in South Dakota, where iron matte smelting was formerly practiced. Matte smelting in reverberatory furnaces is carried on especially at Argo, Colo., and at Butte and Anaconda, in Montana.

Matte smelting in blast furnaces is divided into matte smelting proper and pyritic smelting, although it is not easy to draw a line between them. Theoretically pyritic smelting consists in smelting raw sulphide ore without any addition of carbonaceous fuel, the necessary heat being furnished by the oxidation of the sulphur and iron of the ore. There are very few places, however, where pyritic smelting in its purity is in successful operation, probably nowhere except at Tilt Cove, in Newfoundland, and Mt. Lyell, in Tasmania. At other places furnaces have been run without coke for short periods, but it has always been necessary to put it on the charge at some time or other, and it may be said generally that so-called pyritic smelting is usually carried out with a small percentage of carbonaceous fuel, say 2 or 3%. Of course there is no sharp dividing line between this kind of smelting and the ordinary matte smelting that is done in the blast furnace practice at Butte, Mont., and numerous other places where partially roasted ores are smelted with a low column of ore, a more or less straight shaft, and an excess of oxygen in the furnace, with the consequent oxidation of a large amount of the sulphur in the charge. In certain instances as much as 66% of the sulphur in the charge is burned off, notwithstanding that upward of 10% coke is used.

Pyritic smelting was tried at Keswick, Cal., but was abandoned in favor of the customary Montana practice. As carried out out at Tilt Cove the process is of doubtful value since the matte produced assays only about 8% copper, while the crude ore goes about 4%. This low concentration signifies that the oxidation in the furnace is comparatively little and the smelting does not accomplish much beyond simply melting the ore. Pyritic smelting with a small percentage of coke is carried out successfully, however, at Leadville, Silverton, and Buena Vista in Colorado, with furnace charges in which the chief rôle of the copper is to serve as a collector for gold and silver.

The works of the Hall Mines, Ltd., in British Columbia, furnish an interesting example of matte smelting in large blast furnaces. A furnace which was blown in September 4, 1897, smelted in 60 days 14,676 tons of charge, of which 1,587 tons was barren flux, an average of 244.9 tons per diem. This does not include slag, of which 10% was added to the charge. Under favorable circumstances it was possible to smelt upward of 300 tons per day, one day showing a record of 308 tons. The percentage of coke used varied between 14.5 and 16. The matte-fall from 14,676 tons of ore was 1,029 tons, averaging 49% copper by wet assay, and showing a concentration of 14.25 : 1. The furnace has run successfully, however, with a concentration of more than 20 : 1.

The ore averages 33% silica, 9.5% ferrous oxide, 8% manganese oxide, 7.5% lime, 4% magnesia, 15% alumina, 4% copper, and 3.2% sulphur. The limestone used as flux assays about 10% silica. The slag contains 43% silica, 15% lime, 12% ferrous oxide, 9% manganese oxide, 18% alumina, 0.345% copper, and 1.15 oz. silver per ton.

The furnace is 144×44 in. at the tuyères, 144×64 in. at the top of the jackets, which are 5.5 ft. high and and 160×72 in. at the feed floor. The tuyères, eight per side, are 4.75 in. in diameter and 24 in. above the bottom of the furnace. The charge door is 12.5 ft. above the tuyères, but the charge is generally maintained 4 ft. lower. The hearth is supported by a cast-iron plate resting on six jackscrews, carried by a truck and consisting of a coil of 2-in. water-pipe imbedded in steep with a course of firebrick on end. Provision is made for tapping on the side, but only the end tap is used. The slag flows continuously, the separation being effected in passing successively through two settling pots, the overflow from the second being granulated by a powerful stream of water.

Christopher James patented a process for the treatment of argentiferous copper ores, etc., which consists in the concentration of part of the ore to a regulus of 70 to 75% and subsequent roasting at a low temperature. The roasted ore is then mixed with the proper proportion of raw ore and smelted in a reverberatory furnace, a sufficient amount of silica being added to take the oxidized lead into the slag. The lead is subsequently recovered from the slag.*

John J. Crooke patented a process for the treatment of copper sulphide ore, which consists in roasting the pulverized ore with common salt, leaching the product with an oxidizing solution, whereby the iron sulphide is largely converted into oxide and the copper sulphides are only slightly decomposed. The mixture of copper sulphide and iron oxide is then smelted for metallic copper.†

B. Thomas and J. T. Thomas‡ propose to treat molten copper in a reverberatory furnace with a flux and currents of compressed air. As a flux, soda ash, nitrate of soda, or good black oxide of copper is used. Preference is given to the first. Nitrate produces more trouble in the subsequent treatment of the slag, and its cost is greater, while copper oxide, though equal to soda ash in many respects, brings more copper into the slag. An apparatus is described and illustrated, by aid of which the flux and compressed air can be introduced simultaneously into the furnace. It is claimed that by this method 10 to 14 tons of copper, containing 1.0 to 1.25% of arsenic, can be treated in 12 hours, to produce a copper testing 99.50% with only a trace of arsenic.

W. E. Garrigues describes the following new method for the determination of copper: The solution is evaporated with as little sulphuric acid as possible to expel volatile acids. The residue is then diluted with water and sulphurous acid is added until its presence is plainly apparent by the odor. Precipitate with an alkali thiocyanate. When the liquid settles perfectly clear, which is promoted by further warming, filter and wash well with water. Transfer the filter and contents back to the beaker in which the precipitation was effected, boil with a measured excess of standard caustic alkali—a few minutes is sufficient—and then cool and dilute to a convenient bulk, say 200 c.c. After passing through a dry filter take of the filtrate a quantity equal to one-half the bulk of the original solution and titrate to neutrality with standard acid and methyl orange. The rationale of the process is expressed by the following reaction:

$$2CuSCN+2NaOH=Cu_2(OH)_2+2NaSCN.$$

The author claims for this process greater accuracy than the iodide method is capable of.§

Harry Brearley‖ describes certain modifications in the cyanide method for determining copper. In one of these he proposes to obviate the indistinctness of the end point by using silver iodide as an indicator. The potassium cyanide is added to the usual point, or thereabouts, and potassium iodide is then added,

---

* U. S. Patent No. 84,783. † U. S. Patent No. 589,959. ‡ English Patent No. 17,941, August 13, 1896.

§ *Journal of Amer. Chem. Soc.*, XIX., No. 12, December, 1897, p. 940. ‖ *Chemical News*, Oct. 15, 1897.

going back to a permanent turbidity with silver nitrate. Experiments with the use of soda carbonate instead of ammonia are also described.

M. Willenz* discusses the estimation of copper in pyrites, etc., by the iodide method. His conclusion is that the method gives very satisfactory results, is easy to perform, and requires very little time. It can be applied to bronzes, alloys, etc., as well as to low-grade ores, but in the former case the quantity taken for assay must be less and the solution of hyposulphite may be more concentrated, a decinormal solution, for instance.

The Copper Industry of Arizona.

By James Douglass.

For 15 years subsequent to 1880 Arizona was conspicuous as the only copper-producing region of the world whose ores were oxidized, and the bulk of whose product reached the market in the form of copper bars made by a single fusion. When Arizona became prominent the Burra Burra and Moonta mines of Australia had exhausted their surface ores. The rich oxidized ores of the big Chilean mines had long disappeared, and Arizona mines alone yielded copper oxides and carbonates, in such quantities and of such purity as to permit of their treatment, unmixed with sulphurets, by the same simple process as that applied to the oxidized ores of iron in the blast furnace.

But of the four districts—Clifton, Bisbee, Globe, and Jerome—which in the early years of the eighth decade yielded oxidized ores the Globe furnaces alone still smelt them exclusively. The United Verde mines were the first to enter sulphurets. The Bisbee furnaces were run on oxidized ores and made bars directly until 1894, and by that same date large quantities of matte were made in the two Clifton works of the Arizona Copper Co. and the Detroit Copper Co., though it was not until August, 1896, that Bessemer bars were cast by the latter company, and not until a year later that the pneumatic method was introduced by the former.

The conditions determining the depth to which oxidized ores occur are difficult to decipher. At Jerome, in the United Verde mines, the ore bodies are in slates of Huronian age, and in these mines either rich copper carbonates or depleted iron oxides capped the sulphides. The depth to which complete oxidation there extended was much less than that at which pure oxidized ores are found in, or in contact with, the Carboniferous limestones which seem to have been an active agent in the genesis of the secondary ores of the three southern districts. But in all four groups of mines a partially oxidized rich black sulphuret of copper is found, as an intermediate product, between the carbonates, or oxides, and the unaltered sulphurets. This is true of Globe as well of the other districts, for though the quantity of sulphurets encountered there has hitherto been too small to convert the furnace product into matte, sulphuretted ores of copper are found in the Old Dominion Group and in the upper levels of one of the Hoosier claims. There is, however, no uniformity in the depth to which oxidation has extended in even the same mine. In the Copper Queen mine, for instance, a very large body of unaltered sulphuret of iron and copper occurs on and below the second

---

* *Chemical News*, Vol. LXXVI., No. 1982, Nov. 19, 1897; *Revue de Chem. Analytique*, Vol. V., No. 18.

level, while oxidized ores in considerable quantities occur on and below the fifth level. Fissures in, or a more pervious condition of the limestones, permit the passage of atmospheric agencies to a greater depth in one place than in another.

The supply of oxidized ores, although diminishing, is still sufficient, and will be so for a long time to come, in both the Bisbee and Clifton districts, to enrich the mattes to a grade favorable for bessemerizing, when smelted with raw sulphurets. Preliminary roasting with its costly plant and many disadvantages are thus temporarily obviated.

Notwithstanding the many points of resemblance there are marked differences between the various ore deposits of the Territory, and therefore considerable diversity of treatment.

United Verde.—At the United Verde mines the bulk of the ore is a compact self-roasting sulphuret, beneath an oxidized iron cap which changed at a certain depth into black oxy-sulphurets so rich that for several years, as was the case at Butte, large quantities of the crude mineral were shipped. Most of the ore now is heap-roasted before being cupola-smelted.

The smelting plant is by far the largest and best equipped in the southwest. It consists of six blast furnaces, some 48×80 in. at the tuyères, others 48×120 in. The water jackets terminate below the feed floor, and the whole upper sections of the furnaces are built of wind-boxes in which the blast is heated to a temperature never falling below 300° F. The furnaces are provided with large circular stationary wells lined with magnesia brick and protected in places by asbestos sheathing. The slag is discharged into 4-ton slag carriages, propelled by electric motors, and the matte is carried by an electric crane to the converters in 10-ton unlined steel ladles. The converters are of the trough type and of the estimated internal capacity for a 10-ton charge. They are therefore much larger than those in use at the Copper Queen works, where converters of this design were first adopted in this country.

Bisbee.—The Bisbee group of deposits is in limestone. At the surface the ore contained a great deal of calcite, but the deeper ores are almost free from lime and carry an excess of iron with alumina. The unaltered or only partially altered sulphurets are heavy, and are charged with so large a percentage of mineral as to be unfit for mechanical concentration. The large bodies of completely oxidized ores, which until the adoption of the pneumatic method and the utilization of the sulphurets yielded nearly 80,000,000 lb. of copper bars, look like bedded ferruginous clays, in which masses of cupriferous limonite are involved. Other strata carry the value almost entirely as finely divided metallic copper.

The clayey ore bodies in places merge gradually into barren limestone, the limestone carrying less and less alumina as it recedes from the ore body. In other places the line of demarkation between the ore and the inclosing limestone is sharp. In contact with or near the limestones are found most of the beautiful specimens of malachite and azurite which have made the mine famous.

These rich spots by no means represent the value of the ore, which after rough sorting gives a furnace yield of only about 8%.

The old and simple method of smelting oxidized ores by a single fusion in water-jacketed cupolas has been often described. Jacketed furnaces merely of larger size, 120×42 in., have replaced them at the Queen works, where matte of about 45% is now made from a mixture of oxidized and sulphuretted ores. Trough converters 9 ft. long by 5 ft. diameter, outside measurement, have been adopted. At first the matte was remelted, but this needlessly wasteful operation was abandoned, and at present the matte from each furnace is collected in a large tilting well, from which it is poured, not tapped, into a converter immediately opposite each furnace. By experience it has been determined that a furnace of the above size, run on average ore, will feed its own converter, the large size of the well affording safe margin for any slight irregularities in the operation of the furnace. The monthly production of each furnace and its associated converter will range with the varying quality of the ore from 1,000,000 to 1,250,000 lb. of copper. There are three such couples of smelting furnaces and converters in place, with blowing capacity for five stands. As the converters are small they are moved to and from the relining stage on carriages, provided with hydraulic platforms for raising and lowering the converter shell from and into its stand. No other company except the Copper Queen is now smelting copper near Bisbee. The returns show the total product of the company to have been 190,500,000 lb.; but the district should be credited in addition with a small quantity of copper made by the Neptune Co., with a larger quantity shipped as ore and bullion by the Copper Prince Co., and with 14,300,000 lb. turned out by the Holbrooke & Cave Co. before it was incorporated into the Copper Queen Co. A very small quantity of gold and silver is irregularly distributed through the ores. It amounts to less than a dollar a ton, but by rough selection the ores carrying most of the precious metals are treated in one furnace, yielding bullion which has a trifling value in addition to its copper contents.

The copper mines of Bisbee are connected by 56 miles of the Arizona & South Eastern Railroad with Benson, on the Southern Pacific. The company draws its supply of both coal and coke from Colorado.

Clifton.—From Clifton were carted in 1873 the first copper bars made in Arizona. Prior to the absorption of the Territory into the Union copper had been mined at the Ojo mine in the southwest, and in the sixties very considerable shipments of rich ore were made to California from the Planet mine. But no smelting is recorded as having been done before the Messrs. Lazinski erected a reverberatory at Clifton in which to beneficiate the ores of the Longfellow mine, four miles distant up Chase Creek. These operations seem to have attracted attention to the region, for in the same decade a company, still known as the Detroit Copper Co., was organized by Capt. Ward of Detroit to purchase and operate a group of claims adjacent to the Longfellow. In 1882 the Longfellow and all the property of the Messrs. Lazinski, as well as a number of other mines, and a large tract of undeveloped ground, passed into the hands of a Scotch corporation, the Arizona Copper Co. These two companies are the only active producers in the district at present.

Here as in Bisbee the prospective exhaustion of oxidized ores has compelled both companies to revert to matting and converting. The ores, however, are of a very different character to those of the Copper Queen, sulphides not occurring in compact, heavy form, but scattered through an earthy gangue, and capable therefore of separation by concentration. Both companies consequently subject part of their ores to preliminary dressing.

The Arizona Copper Co. early in its career replaced the very primitive establishment of the Messrs. Lazinski by what were then the best built and most extensive works in the Territory, and erected them on the same site, at the junction of Chase Creek with the San Francisco River, where is enjoyed the unique advantage for Arizona of an abundant supply of water for both concentration and slag granulation. To the smelting plant was first added a mill of 100 to 125 tons daily capacity, in which carbonate ores with silicious gangue too lean to be smelted were advantageously dressed to a high grade. The operation of course involved a very heavy loss in the tailings, and therefore as an adjunct was built a leaching plant, into whose tanks the jig tailings are directly conveyed and where the oxidized copper is extracted by sulphuric acid, made in chambers, from the company's lump pyrites burned in ordinary kilns. The next step in the development of this interesting plant was the erection of another mill to handle lean sulphurets, a novel feature of which was the introduction of four Crossley gas engines as the motive power, the gas being generated in Dowson producers from New Mexican anthracite. The economy of the gas over the steam engine was so conclusive that, when the company last year erected a Bessemer plant as a supplement to its other departments, it installed to run the blowing engines and the electric crane six more Crossley engines of larger unit size. There are now in constant operation 10 gas engines of a total capacity of about 340 h. p.

The plan of the Bessemer plant differs from that in Bisbee, though converters of the same size and type are used. The liquid matte, as tapped from the cupola, is poured into a reverberatory, where at a very small expenditure of coal it is stored at a high heat, and in the same reverberatory it was intended to deprive the converter slags of their copper, but it has been found more economical to take advantage of their basicity by passing them to the cupola. From the reverberatory the matte is conveyed to the converter by an electric crane.

Clifton is connected with Lordsburg, on the Southern Pacific, by a 36-in. gauge railroad, 72 miles in length, the Arizona & New Mexico Railroad, and with the town of Morenci by a system of 20-in. narrow-gauge tracks.

Morenci.—Morenci is the headquarters of the Detroit Copper Co. It is situated in the mountains about 1,300 ft. above Clifton and about six miles distant. The houses are scattered over the property of the two companies, and though their claims interlock there has happily been no litigation or friction.

The works of the company consist of a concentrator of 150 tons capacity, three furnace stacks of 120×42 in., and a 2-stand Bessemer plant. It draws its supply of ore from a number of mines, linked to the works by 20-in. gauge roads, and its supply of water from the San Francisco River at a point distant about six miles and 1,500 ft. below the works. About 200,000 gal. a day are pumped by Worthington pumps through a 6-in. pipe line, under a pressure of 750 lb. per sq. in. The power is derived from a turbine wheel, to operate which there is sufficient water in the San Francisco for nine months of the year. When it fails steam is perforce resorted to.

The two copper companies of the Clifton district have produced nearly 200,000,000 lb. The Arizona Copper Co.'s mines have probably produced since first opened over 125,000,000 lb., and the Detroit Copper Co. has put on the market about 70,000,000 lb.

The coal used by both companies is mined by the Colorado Fuel & Iron Co., but owing to the silicious character of the furnace mixture, Colorado coke, which is high in ash, cannot be as advantageously used as it is in Bisbee, where the furnace charge is basic.

Globe.—As the most remote from the railroad the copper mines of Globe have been the least actively worked of any in Arizona. They began attracting attention in 1880 and 1881, when the predecessors of the present Old Dominion Co. erected furnaces and mined a little rich ore from the slates at Bloody Tanks, about 10 miles from Globe. Failing in this effort the company moved its plant to Globe and resumed operations on the Old Dominion vein, a deposit of very limited size, variable yield, and infusible ore. To secure a better furnace mixture was one of the motives assigned for buying the Old Globe and Old Globe extension claims, then owned by a Connecticut company, as on these claims there was a large outcrop of micaceous iron ore, carrying more or less copper. It has been from these and adjacent claims that the Old Dominion Co. throughout its checkered career has extracted so much copper. The iron outcrop and the deeper ore bodies lie between feldspathic rocks and limestone of the same age as those which elsewhere in Southern Arizona carry copper, or they burrowed into the limestone for some distance from the diorite foot wall.

On the same contact a group of claims was worked and ore extracted and smelted by the Long Island company in 1882 or 1883, and from another parallel group, owned by the Buffalo Copper Co., not a little copper was put on the market about the same period. Two other Globe companies in those early days, the Tacoma Copper Co. and the Carrie Copper Co., made some copper. But all languished and stopped work except the Old Dominion, which under the economical management of Messrs. Keyser & Simpson, enjoyed a prosperous career, despite the great cost of coke and high freight on bullion, due to a 140-mile wagon haul. The Old Dominion mine has passed into the ownership of a large public company, and the Long Island and Buffalo mines, with some outlying claims, have been acquired by the United Globe Mines Co. A railroad has been constructed, the Gila Valley, Globe & Northern, for half the distance between Bowie and Globe to the San Carlos Apache Reservation line. It will probably be completed without much further delay. With the facilities it will afford, the old mines will be worked more actively than of late, and new ones may be opened on some of the many claims near Globe, on which copper has been dug in small quantities.

At present there are two copper smelters at Globe, both of the simplest type, and intended merely to make copper bars from oxidized ores by a single fusion, as hitherto no large bodies of sulphuretted ore have been found. The works are provided with neither mechanical concentrating mills nor appliances for concentrating mattes. As the ores of both companies are silicious, barren limestone has generally to be added as sparingly as possible to the furnace charge, and the resulting slags are rich.

Despite the metallurgical complications which the presence of sulphur entails, the cleaner slags, a slight saving in fuel, and a higher and more uniform percentage of copper in the bullion afford ample compensation, and therefore the Globe companies are not greatly the gainers by being still endowed with oxidized ores only.

There are no statistics dating back to the earlier era when the four small establishments were in blast, and therefore the total production of the Globe is problematical, though it is known to have been about 90,000,000 lb. Its annual production in future will be in excess of what it has been in the past.

Outside of the above four so-called copper camps of Arizona there is no notable copper mine. The Rosemount Copper Co. owns a number of claims in the Santa Rita Mountains from which rich ore is collected until the quantity warrants a furnace run. A copper furnace near Crittenden, on the New Mexico & Arizona Railroad, has run spasmodically on custom or purchased ore, chiefly from the Harshaw district, where unfortunately the copper ores are seriously contaminated with blende. Another furnace on the Big Bug, east of Prescott, made rich argentiferous mattes till shut down from lack of ore. On the San Carlos reservation stands an idle furnace plant, the property of the San Carlos Copper Co. There are at least three abandoned copper furnaces southwest of Tucson, one the property of the Prince Copper Co., another of the Young America Co., and the third the Reward Smelter. On the Gila near Riverside stands a disused plant, and there is more than one in the desert to the east of the Colorado River. Ill success has overtaken all these and other operations; in some cases by reason of the most vital of all defects—lack of ore; in others because of the infusible character of the furnace charge; in others again because of the situation of the property. These many derelicts on the ocean of mining enterprise, and the still more numerous prospects which are claiming public support, are evidence of the widespread occurrence of copper ores. Some of these may be profitably exploited to-day; others, under more favorable circumstances than now prevail, will sooner or later supply the deficit left by the exhaustion of existing mines—for as time passes means of cheaper transportation will be extended; better methods of extraction invented and applied; and fuel, if not derived from nearer sources, will be more economically consumed.

Therefore, looking to the immediate future there will probably be a steady but not alarming increase in Arizona's production of copper. Now that the active companies are not restricted to the smelting of oxidized ores, but have made provision for the utilization of their reserves of sulphides, and have found that these can be worked without the prohibitory cost, which was at one time involved, it is inevitable that a certain expansion of their operations will take place. Add to this the resumption of work in the Globe mines and by the Globe furnaces, and the probabilities are that during the next two or three years some of the Arizona mines will rise to a more prominent place in the list of producers than they have previously held.

THE COPPER MINES OF NORTHERN CALIFORNIA.

BY H. A. KELLER.

THE largest part of the world's copper supply is produced in the United States. This is made up chiefly of the product from four distinct sections, viz., from Butte, Lake Superior, Arizona, and Shasta County in California.

The last being the latest source is at this time one of the most interesting. This Shasta County belt comprises several square miles in close proximity to the

Southern Pacific Railway's line between San Francisco and Portland. The town of Redding is the main base of supply. The copper zone starts practically with the well-known Iron Mountain deposit. From there it can be traced northeast for several miles, when it seems to cross the Sacramento River in the direction of Copper City. From the latter place a limited quantity of good ore has been extracted, some of which has been smelted at the Afterthought furnace, the remainder having been shipped to San Francisco.

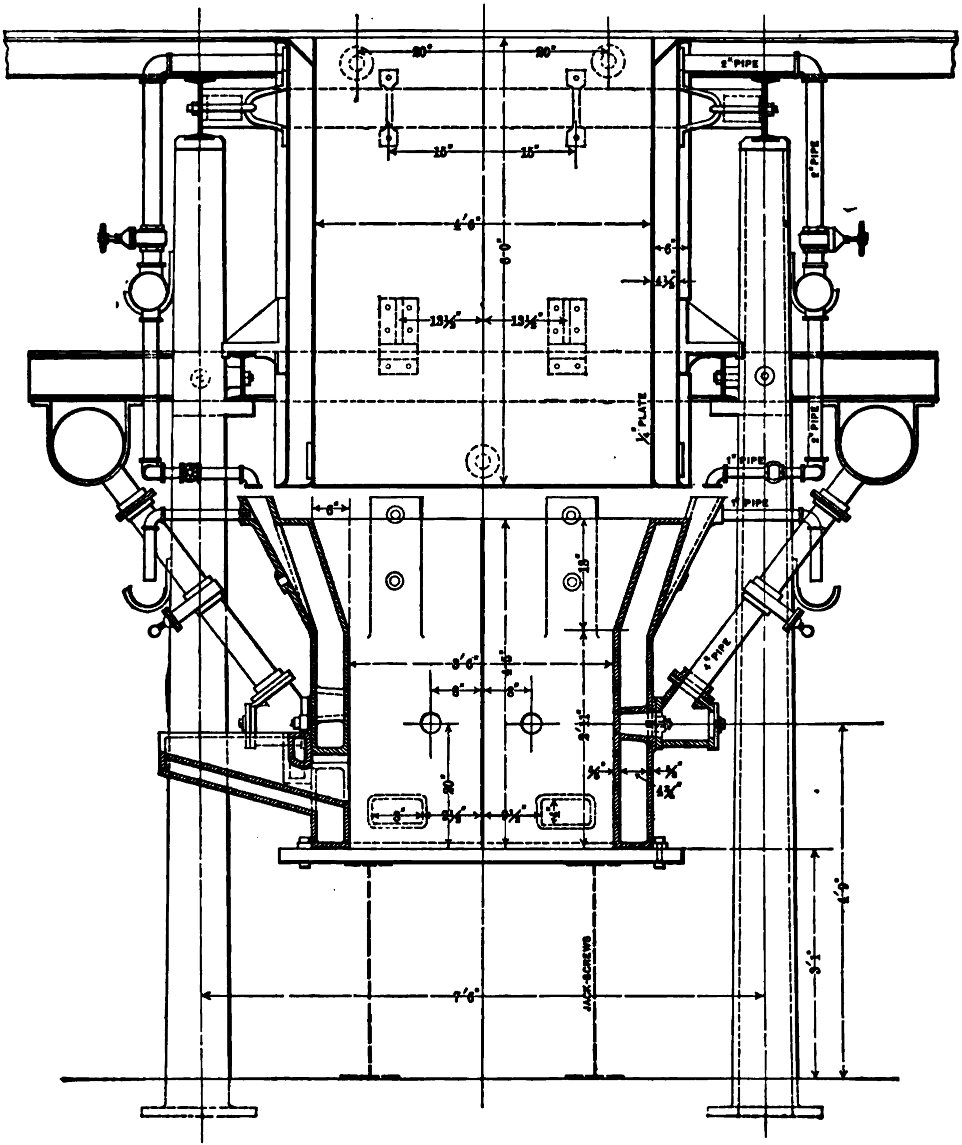

42 x 150 IN. SMELTING FURNACE AT KESWICK, CAL.

The copper-bearing sulphurets occur in large lenticular bodies imbedded in a feldspathic rock, by some called porphyry, by others granite. This belt is considerably over a mile wide and is more or less heavily impregnated with sulphides of varying value. Closely accompanying this follows a barren formation of shale or slate. All over the surface an extensive oxidation has occurred, forming in many places a heavy and distinctive ferruginous outcrop. The mineral masses are very distinct, being separated from the country rock by a clayey gangue and have much the shape of the hulk of a large ship.

Owing to the large outlay which such low-grade bodies require to become profitable, their exploitation has made slow progress. Three economic factors arise with respect to them, namely, what is their grade, their size, and how close to the surface do they lie? It is only of late years that the value of such deposits has been fully recognized, owing perhaps principally to our metallurgical progress. The Iron Mountain is the only property in this belt so far extensively worked for the reason probably that it has the only large mass which comes directly to the surface. Its history, therefore, is that of the district.

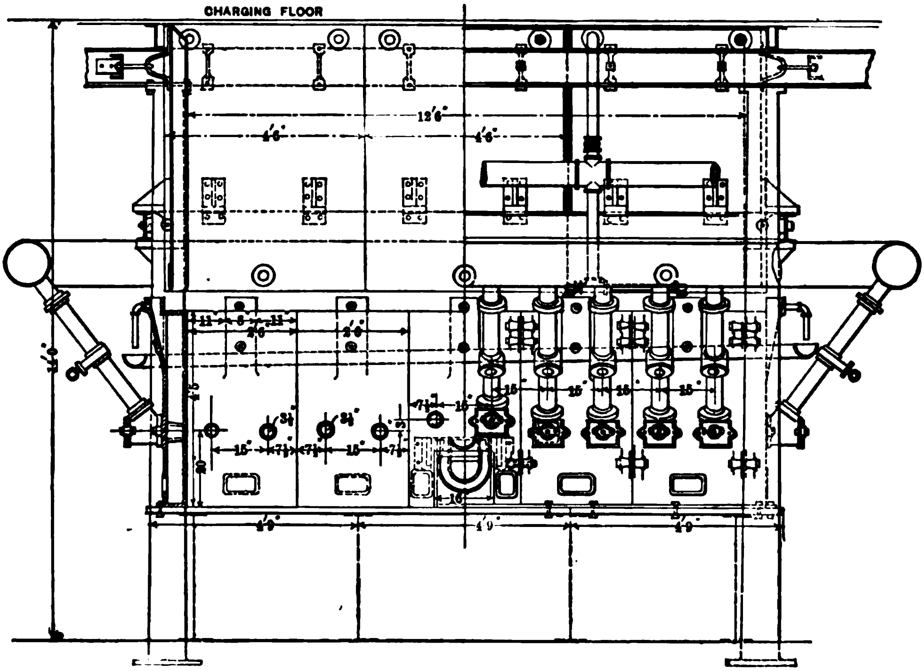

42 x 150 in. Smelting Furnace at Keswick, Cal.

The mine has been known for years, and its outcrop of gossan, which is particularly heavy, was worked with varying success in an amalgamation mill. The value of the underlying sulphides was not recognized until 1895, and then by men who had acquired their mining experience during the earlier days of Leadville. By them it was sold to the present English company.

The essential question then was that of economical reduction of heavy sulphide ore low in grade and carrying but little silica. After some unsuccessful attempts in that direction the writer was called in and had the pleasure and satisfaction of installing the present smelting plant with a daily capacity of 500 to 600 tons of ore. To Alexander Hill is due the quick and thorough opening of the mine.

The ore body lies in such a manner that it is altogether worked by adit levels, requiring neither hoists nor pumps, thus making the conditions for mining very favorable. Since there is no waste in the mine the filling is being done with barren surface rock quarried in the neighborhood for that purpose. The solid mass of ore is in places several hundred feet wide. The ore is transported by railway to the reduction works at Keswick, a distance of 11 miles from the mine.

The ore is a heavy sulphide with varying amounts of copper, silver, and gold. The company's prospectus gave the grade at Cu 75%, Ag 3 oz., Au 65c. per ton. It carries much sulphur (47%) and iron, with varying amounts of zinc, and but 1 to 2% silica, requiring therefore the addition of silicious material for fluxing purposes.

The present works consist mainly of blast furnaces, for which the ore is roasted in kilns or heaps. These were built from June till September, 1896. Each furnace measures in section 42×150 in. at the tuyères and is 9 ft. from the charging floor to the tuyères. We may place their average duty for 24 hours at 320 charges, while runs as high as 221 charges have been made during single 12-hour shifts, taking the following as an average charge: Roasted sulphides, 1,300 lb.; raw sulphides, 400; quartz, 400 (sometimes barren); slag, practically none; limestone, 100 (used intermittently)—total, 2,200 lb.; coke, 170 lb. (either English or Washington). In further explanation I may state that the roasted material has lost over 26% of its original weight. The resulting mattes run from 40 to 45% copper. Differing from most other places, it is most economical to produce slag as basic as possible. This runs from 25 to 26% SiO_2, and there is but little foul slag to be returned. The slag-flow is continuous and the spout shown in the accompanying engraving is novel and effective.

In conclusion I may say that I see no reason why, with intelligent prospecting, similar bodies should not be encountered, though they may not lie so close to the surface. It hardly stands to reason that all the values of so extensive a section should be concentrated near its surface and in a single body.

The Southern Oregon deposits do not amount to much. They occur in a hard serpentine, showing ferruginous outcrops, but they do not go down. The only ore which I have seen was a few hundred tons of sulphide from near the surface, occurring in irregular bunches.

THE HERRESHOFF ROASTING FURNACE.

BY J. B. F. HERRESHOFF.

THE Herreshoff roaster represents a type of furnace having a central shaft, with a number of circular shelves placed at right angles to the shaft. Attached to the shaft are two arms over each shelf, placed at opposite directions, these arms having teeth or rakes so disposed that the roasting material is plowed from the shaft outward and delivered through openings at the outer edge of the shelf. As the ore drops on the shelf below, the plows are so placed that the material is turned over and over, finally discharging through a large opening around the shaft. The area of this opening is sufficient for the gas that passes through it. The same is true of the openings at the outer edge of the shelf above. The material, after being plowed very slowly over five shelves, finally discharges through two outlets at the outer edge of the bottom shelf.

This general type of furnace was first brought before the public over 20 years ago by McDougal in England, and his manner of carrying out the principle is fully described in Lunge's treatise on "Sulphuric Acid." I am not aware that this first attempt at carrying out this principle proved a success. The main difficulty arose from the fact that the arms were rigidly attached to the vertical shaft, so that when they became distorted by excessive heat, or when the teeth were destroyed through chemical action of the red-hot ore, it became necessary to remove them. This removal could only be accomplished by a complete shutting down and cooling off of the furnace.

Another and more successful attempt was made in this country by Johnson. His arrangement consisted in employing the same general principle, but the arms were made particularly heavy and rigidly bolted to the vertical shaft. Into proper recesses in these arms he attached teeth or plows. When these plows were finally destroyed, they were removed and new ones inserted, without shutting down the furnaces. The main difficulty consisted in the fact that the arms, notwithstanding their great strength, would finally succumb to the heat, and then it became necessary to practically shut down the furnace and make extensive repairs.

In the earlier Herreshoff furnace, in which this principle is carried out, the chief difficulty was overcome by attaching arm-holders to the vertical shaft. They were made in such a manner, by means of forked projections, suitable lugs and bridges, that it became an easy matter to lock a light arm into a holder. It was also easy to remove a red-hot and worn-out arm, withdrawing the same through the door openings.

Thirty-six of these furnaces, employing this arm-holder, have been running at the works of the Montana Ore Purchasing Co. for several years. They roast the regular Butte concentrate from 35% sulphur down to 4 or 5%. It is stated that the cost of renewals is very light. One man attends to the working of the 36 furnaces. It is said that they are roasting for less cost than any of the modern mechanical roasters.

About a year ago these furnaces were introduced among the various acid plants in the Eastern part of the country, especially among the fertilizer works in the Southern States. About 60 were sold. They generally employed the Arminius fine ore, containing 44% sulphur, which burned with much energy and thus with great concentration of heat. The temperature proved too high for successful maintenance of the arm-holders. The result was a frequent shutting down of the furnace in order to replace the arm-holders. It required a long shutting down on account of the necessity of cooling the furnace sufficiently to enable the attaching an arm-holder to the shaft by means of bolts. This difficulty became such a serious and embarrassing one that it threatened to destroy the usefulness of the furnace in roasting such ores as the one referred to. This prompted the invention of an important improvement: it consists in the employment of a very large vertical shaft, made hollow so that a large quantity of air is drawn up through it; this amount being increased by the introduction of a sheet-iron stack extended above the top of the furnace. The shafts, or pipes, employed are 14 in. in diameter. Between each shelf there is a cross channel passing directly through the shaft at right angles, as shown in the vertical section drawing. This cross channel is about 4 in. wide and 5 in. high, and allows an ample space around it for the passage of the ascending air. Into this channel, or socket, the arms are inserted. In the top of the channel, at the center of the vertical shaft, is a pocket running across the channel; into this, a rib at the inner and top edge of the arm locks when the arm is forced into its proper position, as shown in the drawing. The weight of the arm always keeps it properly locked in the channel. By raising the outer end of the arm about 3 in. the top edge of the rib is brought below the pocket, and the arm can be easily pulled out. Practice has shown that these arms, weighing 100 lb., can be unlocked and removed from the furnace, and a new one put in and locked into place in about one minute.

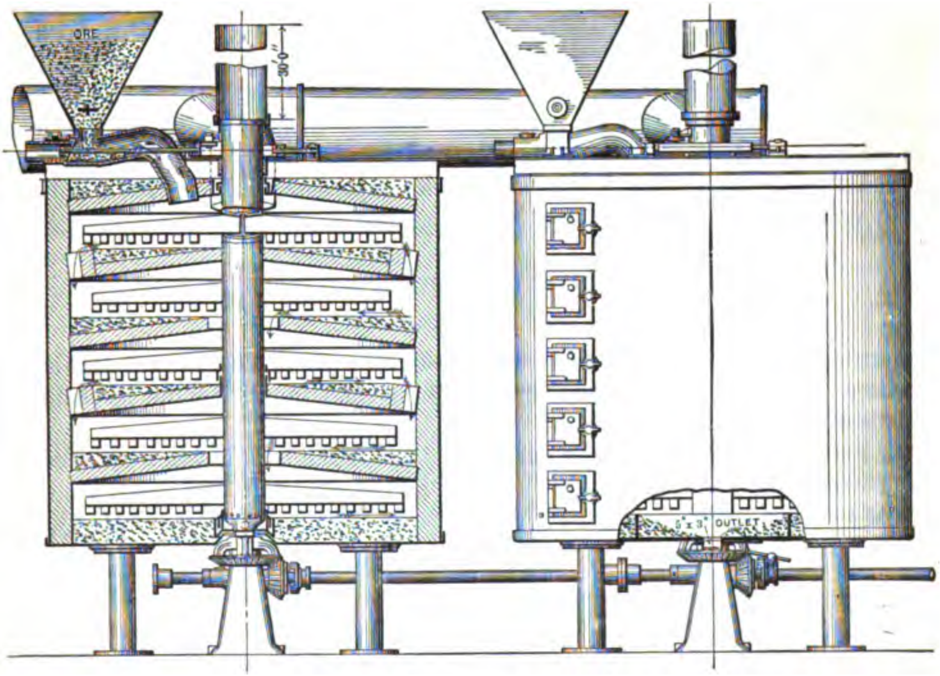

THE HERRESHOFF ROASTING FURNACE.

The shelves, shown in the drawing, are made of firebrick, arch-shaped, of 4½ in. depth. They are leveled off, as shown, with ashes or any similar material. The ore is fed automatically, by means of a plunger that is moved back and forth in a horizontal cylinder, as shown. When going toward the central shaft, the ore is pushed forward, and discharges down the curved pipe on the top shelf. When the plunger is pushed back, away from the central shaft, the fine ore descends and fills the vacant space. The mechanical device for the performance of this backward and forward movement is very simple. The central shaft revolves one revolution in two minutes, the plunger making two strokes in the same time.

The outside casing of the furnace is of ¼-in. steel, and is strongly riveted. The lining inside of this is of red brick, 8 in. in thickness. The outside diameter of the furnace is about 10 ft. and the height about the same. The usual amount of 44% ore roasted in a furnace of this size is 6,000 lb., although since the introduction of the improvements here described and shown the furnace roasts, very successfully, over 7,000 lb. of this ore. The roasted ore contains from 2½ to 3½% sulphur.

The central shaft, presenting a large cooling surface, modifies somewhat the temperature of the whole furnace. This is a decided benefit. That portion of the arm, where greatest strength is required, is maintained below a red heat, as well as the shaft itself. The arms are hollow and of rectangular cross-section, and of course made of a composition of cast iron that has been proved to stand the high heat most satisfactorily. When roasting the Butte concentrates five tons of ore per 24 hours has proved to be the most economical amount to roast.

Of the 60 furnaces that had experienced difficulty with the arm-holders, already described, all of them have been recently installed with the new and simple device, a large shaft with the cross channels, as described. Now they are all running satisfactorily. The result of their experiences have caused a call for many more furnaces to be installed with the latest improvement.

PROGRESS IN ELECTROLYTIC COPPER REFINING IN 1897.

BY TITUS ULKE.

THE attention of electro-refiners was chiefly directed in 1897 toward acquiring a better knowledge of the chemistry of refining and improving the mechanical details of the electrolytic process.

E. Keller* gives the following partial analyses of the tank residues obtained in the Baltimore electrolytic refinery, and also of the anodes treated there, the copper of I. having been made from Butte ores by the reverberatory, of II. by the converter process:

	I. Residues.		nodes.	II. Residues.		Anodes.
	Per Cent.	Ounces.	Ounces.	Per Cent.	Ounces.	Ounces.
Ag	58.8940	15,718.700	100.1	55.150	16,085.040	100.47
Au	0.2959	86.800		0.198	57.749	
Cu	11.0100		Per Cent.	18.820		
Pb	0.9100		0.0098	2.070		Per Cent.
Bi	3.9300		0.0820	0.340		0.0085
Sb	6.2500		0.0651	2.440		0.0510
As	2.1070		0.0586	1.090		0.0180
Se	0.3940		0.0098	0.718		
Te	1.1740			0.892		
Fe				0.800		
SO	5.2680			10.680		
H_2O (a)	2.3650			2.604		

(a) Sample dried at 100° C. and remainder of water determined at 250° C. Oxygen and hydrate water were not determined. The figures in I. represent the average of nearly one year's run; in II. a three months' run in the same refinery.

As the anodes contribute practically all their contents in silver, gold, selenium, and tellurium to these residues, assays of the amount of silver present in the latter and in the anodes will determine the ratio of the concentration

---

* *Jour. Am. Chem. Soc.*, XIX., No. 10.

of silver, gold, tellurium, etc., in the residues. For example, if we find the latter to contain 16,000 oz. of silver per ton, and the anodes to assay 100 oz. per ton, the factor of concentration is 160. Dividing the percentage of any partially deposited element, such as Bi, Sb, and As, in the slime or residue, by the figure for concentration, we obtain that percentage of the original quantity in the anode deposited in the residue. The difference between this and the total percentage in the anode is the percentage of the element dissolved by the electrolyte. Proceeding according to the above, and dividing the figure obtained by the corresponding percentage of the element in the anode, we obtain the following results:

	I.			II.		
	Contents of Anodes.	In Residue.	In Solution.	Contents of Anodes.	In Residue.	In Solution.
	Per Cent.	Per Cent.	Per Cent.	Per Cent.	Per Cent.	Per Cent.
Cu	99.3000	0.07	99.93	99.4000	0.086	99.914
Bi	0.0320	78.22	21.78	0.0035	60.710	39.290
Sb	0.0651	61.14	38.86	0.0510	29.900	70.100
As	0.0586	22.90	77.10	0.0180	37.840	62.160

Lead is not considered in these figures, because of the difficulty of ascertaining the amount derived from the commercial sulphuric acid employed or from the lead-lined tanks.

The ratios of selenium to tellurium in the two samples of residues, 1 : 3 and 7 : 9, show that selenium is not merely a minor companion-element to tellurium in our Western copper. No doubt these two elements occur in the corresponding anode copper in the same ratio, and their probable quantities in the anodes can readily be ascertained by dividing their percentages in the residues by the factor of concentration. Keller finds: In Anode I., Se 0.00251%, Te 0.00748%; in II., Se 0.00449%, Te 0.00558%. The total of the two elements thus calculated, 0.00999% for I., corresponds closely with the actual amount, 0.0098% found in the anodes. For II. no direct determination was made in the anodes.

In the *Zeitschrift für Elektrochemie* of January 5, 1898, the reviewer published an article on "The Treatment of the Electrolyte in American Copper Refineries," in which the various methods of purifying electrolytic solutions are discussed in the main as follows:

It is well known that the solutions of copper refineries, after several months' continued use, not only become more or less saturated with arsenic, antimony, bismuth, and iron, but that more copper is dissolved from the electrodes than is electrically deposited on the cathodes, so that there is also a gradual accumulation of copper vitriol in the liquids. This bluestone must eventually be recovered, and its recovery necessitates a crystallizing plant, which is a bulky and costly addition to any refinery. Above all, the deterioration of the copper produced must be avoided, either by removing the impurities from the foul electrolyte or by substituting fresh electrolyte for the latter.

All the processes employed to obviate this difficulty either embrace the partial purification of the electrolyte, *i.e.*, the removal of its excess of arsenic, antimony, and iron, after which it is again circulated in the copper depositing tanks, or the withdrawal from the circulation system of a fixed quantity of the electrolyte, which is replaced by fresh solution, while the impure liquid is treated for the recovery of bluestone and its other valuable constituents. Before proceeding with a detailed description of the above methods, let us consider a few of the chemical reactions involved.

It has not yet been definitely settled whether the arsenic in the anode is present chiefly as metal or as arsenate of copper. In the former case it passes into solution during electrolysis as arsenious acid, and arsenic is not deposited until the electrolyte has become saturated with this acid. When arsenate of copper is found in the anode, this salt, being a non-conductor of electricity, is not altered in its composition, and forms part of the slimes or residues.

In the course of time, however, arsenious acid is dissolved as a secondary result of the action of the free sulphuric acid of the electrolyte, and a certain amount of green, insoluble slimy arsenite of copper is eventually formed. This secondary formation of arsenious acid can be diminished by frequently removing the slime film from the anodes, *i.e.*, lifting the latter out of the tanks and washing off their adhering slimes into a special receiver. From a neutral bath or a solution containing an insufficiency of copper, arsenic is deposited on the cathode with the copper.

Antimony, if found as metal in the anode, partly dissolves at first, although a portion of this dissolved antimony may eventually precipitate as a neutral salt, and partly forms an insoluble basic sulphate of antimony, which coats the anode. In the course of time antimonious acid is formed, on account of the secondary action of the free sulphuric acid present. Antimony is not electrolytically deposited on the cathode as long as the solution is nearly normal in composition (containing 5 to 6% free acid and 15 to 20% bluestone), even if the electrolyte is so saturated with antimony that its basic salts begin to separate. At the worst a little basic antimony compound may be mechanically deposited on the cathode and form a black coating containing both copper and antimony. Antimony is apt to deposit with the copper and cause the latter to become dull colored, brittle, and to form needle-like projections, whenever the solution becomes neutral, but if the solution contains an insufficiency of copper, antimony is invariably thrown down on the copper, even when considerable free acid is present.

Iron in the anode dissolves more readily than the copper, and forms ferrous sulphate, which in time is partly oxidized to ferric compounds. These are produced freely and directly whenever the density of the current reaches 1,300 ampères per sq. meter. "Sprouting" of the cathode is produced, if iron is allowed to replace copper in the electrolyte until there is but 2 g. of copper present to the liter of solution.

Copper deposited with a weak current from a neutral solution, even if the latter is free from impurities, is often so brittle that it can be readily pulverized. This is due to the fact that the copper contains cuprous oxide. Of course the neutralization of the electrolyte also decreases the conductivity of the solution, so that its resistance with anodes 5 cm. apart, for example, may be raised from say 0.1 volt (normal) to 0.25 volt. A weak current is not able to completely decompose the copper sulphate into Cu and SO_4, so that some Cu_2O is deposited with the copper. This deposit of Cu_2O decreases with increasing current strength, up to that point at which the current is strong enough to throw down absolutely pure copper.

In acid solutions the cuprous oxide of the cathode is decomposed by a secondary action, while in a neutral electrolyte it remains on the cathode. Roessler's hypothesis may explain why certain refiners associate a green solution with bad cathode copper, good copper being deposited from the same solution, as soon as it changes its color from green to blue. Roessler believes that under certain conditions metallic copper reduces an acid solution of cupric sulphate and forms cuprous sulphate, which is subsequently oxidized by the air to cupric sulphate. The quantity of copper so dissolved increases with the rapidity of the circulation, *i.e.*, the more the electrolyte is exposed to the atmosphere, and with the diminution of the density of the current. The more thoroughly the circulation is kept up, the purer, more finely crystalline, and more flexible will be the deposited copper, even with nearly pure solutions and under otherwise normal conditions.

Tellurium and selenium, which are frequently present in anode copper, probably as telluride and selenide of silver or copper, have but little effect, it seems, on the purity of the copper deposited.

At the extensive works of the Baltimore Electric Refining Co. the following method of preserving the purity of the main electrolyte has given entire satisfaction:

This consists in periodically withdrawing a fixed portion—say one-fifth—of the electrolytic solution for manufacture into blue vitriol, and replacing it by fresh electrolyte, so as to keep the percentage of impurities in the circulating electrolyte down to an approximately constant figure. The composition of the solution strength of current and other factors of refining not being permitted to vary within large limits, it is comparatively easy to produce a nearly uniform quality of copper. The bluestone recovered is sold at a fair profit, and the mother-liquor from the blue vitriol works is finally treated with scrap iron to precipitate the last 2 or 3% of copper it contains.

A mode of treatment similar to the Baltimore process is employed at the Balbach refinery. Here the standard composition of the electrolyte is kept up by periodically running off a portion and replacing it with pure solution. The impure liquid is then pumped to the vitriol works, in which sulphates of copper, iron and nickel are recovered from the solution by a process of crystallization, after which the mother-liquor is boiled down to recover arsenious and sulphuric acid. If the electrolyte contains considerable antimony, part of it is said to precipitate as gray metallic antimony or as antimonious acid in the discharge launders.

Several methods based on the direct recovery of metallic copper from impure electrolytes by cementation or precipitation on scrap iron have been tried, but have not given satisfaction, owing chiefly to the excess of iron vitriol produced.

The process used at the Guggenheim electrolytic refinery, near Perth Amboy, at least until recently, was based on the belief that a large portion of the arsenic, antimony, silver, etc., found in bad cathode copper is not deposited from the bath electrolytically, but mechanically, by suspended impurities settling on the rough surface of the cathode, especially when high-current densities or cloudy solutions containing floating impurities are employed. Deducible from the above is the evident advantage of a rapid clarification of such an electrolyte. To accomplish this end, an improvement on Borcher's system of circulating the solution, based on the mechanical action of the Pohle air lift, was introduced into the Guggenheim refinery. It covers the blowing of air under 3 or 4 lb. pressure into the electrolyte by means of lead pipes, in such a way that solution is drawn from the tank by a lower pipe and delivered into an upper pipe, to be discharged back into the tank through a large number of perforations in the upper pipe, and so on. The electrolyte is thereby subjected to the oxidizing influence of air jets, whereby, it is claimed, the solution of some of the impurities suspended in the electrolyte is facilitated and the latter is clarified.

At first the importance of the new system was much exaggerated, especially as regards the removal of the arsenic, and a claim was made that it would altogether obviate the necessity of the usual terrace or overflow system of circulation. Although such statements were not justified, the fact remains that the air circulation, if assisted during two or three hours in every 12 by the general circulation of the solution from tank to tank, gives better results than the old system applied alone.

The recovery of bluestone from the discarded electrolyte is accomplished at Perth Amboy as follows: The solution is first boiled in lead-lined tanks with scrap copper, in the presence of steam and air, so as to neutralize the free acid and to increase the copper contents of the solution to the degree desired. It is then pumped to the crystallizing tanks, in which bluestone is secured by allowing the copper sulphate to crystallize out on bands of lead suspended in the saturated solution. The mother-liquor siphoned off contains most of the arsenic and antimony originally present in the electrolyte, together with some remaining copper. To recover the latter, the mother-liquor is treated in special tanks with sheets of scrap iron. This metal first precipitates out the copper and then the arsenic, so that a black precipitate is finally secured, containing as much as 60% of metallic arsenic. The dirty precipitate may either be added to a furnace charge to be worked up into base copper, or utilized in the manufacture of compounds of arsenic, such as Scheele's or Paris green and crystallized arsenious acid.

At the Chicago Copper Refinery the final impure solution remaining after the recovery of the bulk of the blue vitriol was at one time, if not at present, concentrated by evaporation, so as to crystallize out the remainder of the blue vitriol and the arsenious acid. The bluestone was then leached out of the mixture by just sufficient water to effect its solution, without attacking the arsenious acid, which was subsequently collected and sold. Sulphuric acid or iron vitriol was finally recovered from the residual mother-liquor.

As to the special purification processes, or those aiming at the direct removal of arsenic, antimony or iron from the electrolyte, or of several of these impurities at the same time, at least five have been suggested, of which three (1. Boiling with metastannic acid; 2. filtration through a bed of copper oxide; 3. oxidation with jets of air; and various combinations of these methods) have not given much satisfaction.

Alloying the anode with tin (25 lb. of tin to 10 tons of copper), based on the assumption that the tin would reduce any arsenate of copper present to arsenite, and form an insoluble salt with the arsenic, thus preventing the deposition of this metal on the cathode, was also tried. Experiments at the Chicago refinery demonstrated that this process, while accomplishing a slight improvement in the cathodes in making them smoother and more malleable, could hardly be made to pay, except when the solution is very impure and contains considerable arsenic.

The Anaconda method of purification is believed to consist: 1. In repeatedly passing the impure electrolyte through a filter of oxidized granulated copper or cuprous oxide, which is said to precipitate part of the bismuth and antimony; and 2, in oxidizing the solution, now nearly neutral and saturated with copper, by introducing jets of air. The oxidation, it is claimed, causes the partial precipitation of ferric oxide and arsenate of iron in the solution.

One of the best methods of direct purification known to the writer covers the treatment of the foul solution in special tanks in which the dissolved impurities and necessarily copper are electrically precipitated on copper cathodes placed opposite lead anodes. The current employed is preferably strong enough to precipitate arsenic and antimony, but not iron. The acid solution, thus freed from arsenic and antimony, may now be restandardized by the addition of bluestone and water, and continued in regular use, as electrolyte in the main tanks. When finally it has become so highly charged with iron salts as to make it imperative to remove the iron, or to take out the copper in the shape of blue vitriol, it is pumped to the crystallizing house.

In carrying out the above process about 12 lead-lined purifying tanks (three sets of four each) are required for 268 refining tanks. The former are preferably covered with hoods to carry off any evolved gases. The cathodes are about 0.1 in. thick, and of the usual dimensions of refinery cathodes, while the anodes are lead sheets of the same size sweated on to the copper rods which support the plates. The precipitated metals and metalloids partly hang on the cathodes and partly drop to the bottom of the vats. These are cleaned about every two months, and the accumulated arsenical and antimonial mud removed. The mud carries from 40 to 60% copper and is easily reduced down to impure copper in one of the refining furnaces or added to the charge for the converters. When the cathodes in the purifying tanks have become thickly incrusted with impurities, etc., they are melted and cast into copper. Such copper is used for certain alloys, in which arsenic and antimony are not necessarily harmful, and may even be desirable for lowering their fusing point. The electrolyte, purified by the above process, is restandardized as stated, and continued in regular use in the refining tanks until the solution has become so highly charged with iron salts as to interfere with the copper deposition, *i.e.*, to cause the deposited copper to roughen or blacken. In that case only is the refinery solution pumped to the blue vitriol works, so that the amount of bluestone it is necessary to recover is kept down to a minimum quantity.

Although this process, or one much like it, was formerly tried at Anaconda and at Baltimore without giving very satisfactory results, it is now employed to great advantage in one of the large Western refineries. Where there is abundant water power, as at Great Falls, Mont., the cost of the current need not be high, so that current densities in regular copper refining of as much as 30 ampères per sq. ft. of cathode surface may be advantageously employed, when the electrolytic solutions are kept comparatively pure.

From a consideration of all of the above-described methods, we reach the conclusion that a crystallizing plant for the recovery of blue vitriol, although bulky and cumbersome, must yet remain a necessary adjunct to every copper refinery. No practical means has yet been devised for entirely replacing it. However, by diminishing the need of blue vitriol works of large capacity, and thus avoiding the excessive production of what is often a drug on the market, the adoption of the best methods described above by refining companies has certainly resulted in keeping down the cost of refining copper.

Coming now to recent improvements in copper-refining apparatus, we must call attention to the following ingenious machine for fastening flat loops on cathode sheets to secure a better method of their suspension than the method heretofore used. This machine was designed by J. T. Morrow, the superintendent of the Boston & Montana electrolytic works at Great Falls.

From cathode sheets, which are from $\frac{1}{60}$ to 0.1 in. thick, strips about 10 in. long and 3 in. wide are cut, bent at the middle and, together with the trimmed cathode sheets, fed by hand into the fastening machine. The latter first slits both the sheets and the loop at one stroke and in a designated spot in the shape of a cross, and then, by means of a punch, laps the double flaps produced by the slitting process over the cathode sheet, so as to make a secure fastening. The sheets can now be hung in the tanks by simply passing a copper rod through their two supporting loops. As the entire face of the cathode is thus made to hang within the liquid its active surface is increased, and the circulation of the electrolyte at its top is not impeded, an important advantage over the usual method of suspending cathodes, which consists in bending their entire upper ends in a roll over the supporting bars.

With regard to the sampling of blister copper and anodes, E. Keller proposes the following improvement: It has been found that samples taken from different portions of anode plates and pigs of blister copper are apt to vary considerably in their percentages of gold and silver, as well as base metals, owing to their segregation in cooling, and that the common method of securing samples by drilling, punching or chipping often leads to erroneous results. A more rational and satisfactory mode of sampling is to take the sample when the copper is in the furnace and after the charge has become thoroughly mixed, and either to pour a shot sample from a ladle in which the whole metal is liquid, or to cast a sample-plate, the thickness of which is small compared to the other two dimensions, and to drill or punch a sample from this plate.

With electrolytic copper, not only different plates from the same tank, but different portions of the same plate may show a different composition, and the sampling is only satisfactory after the cathode plates are melted down and the furnace charge has become thoroughly mixed.

In the United States the only new plant for producing electrolytic copper completed during 1897 was that of the Mountain Copper Co., Ltd., at Elizabeth, N. J. The Nichols Chemical Co. enlarged its works and actively entered the market as a customer for all kinds of copper ores, mattes and blister copper, and the Boston & Montana Co. increased its daily output at Great Falls to an estimated average of 60 to 80 tons of electrolytic copper.

COPPER SMELTING AT MANSFELD, GERMANY.

The cost of mining 650,985 metric tons of ore in 1896 was 25.08 marks per ton, which was 1.12 marks less than in the previous year. The cost varied from 11.82 marks for the 103,911 tons produced in the Glückaufer Revier to 36.50 marks for the 95,624 tons in the Schafbreiter Revier. The four smelting works reduced 641,470 tons of schist and 1,268 tons of sand ore, a total of 642,738 tons, against 555,995 in 1895. At the Krughütte there were in blast three to four furnaces, each with six tuyères, at the Kochhütte four to five furnaces, each with four tuyères, at the Eckhardt works four to five three-tuyère furnaces, and at the Kupferkammerhütte two to three six-tuyère furnaces. The furnaces at the Koch and Eckhardthütte work with cold blast; those at the other works partly with cold and partly with hot blast. The average quantities smelted per furnace per day, with the corresponding figures for 1895 in parenthesis, were as follows: Krughütte, 156 (162); Kochhütte, 109 (109); Eckhardthütte, 93.4 (91); Kupferkammerhütte, 139.3 (139). The production of matte, and yield of copper and silver at the four works was as follows:

Year.	Ore Smelted.	Matte-Fall.	Per Ton of Ore. Kg.	Yield per Ton of Ore.		Coke Used Per Ton of Ore. (*a*) Centners.
				Copper, Kg.	Silver, Kg.	
1895....	555,904	42,724	77.10	33.42	0.189	3.41
1896....	642,738	49,944	77.86	32.04	0.179	3.59

(*a*) Including coke used in steep.

A large number of slag-brick for building and paving were produced. It is to be borne in mind, however, that the smelting is done there with a highly silicious slag, which is available for this purpose where the ferruginous slag of the ordinary copper smelting works would be quite unserviceable. The slag is led directly from the furnaces into iron molds, previously heated, and after these have been filled they are covered thickly with sand and allowed to stand at least 72 hours. After having completely cooled each brick is tested by a strong blow with a hammer, when those containing blow-holes crack.

The first matte produced at Mansfeld is roasted in kilns and the gases used for sulphuric acid fabrication, of which various grades from 50° to 66° B. are made. The roasted matte is then smelted in reverberatory furnaces (*Spurofen*). In 1896 there were smelted in these furnaces 47,696 tons of roasted matte, 1,228 of raw, and 1,268 of silicious flux (sand ore), which required a consumption of 421,578 centners (8.62 per ton of ore) of stone-coal. The yield of second matte (*Spurstein*) was 23,762 tons (48.6%) and of copper bottoms 748.4 tons (1.5%). The *Spurstein* contained from 739 to 773 kg. copper per ton and 3.925 to 4.639 kg. of silver. The copper bottoms had 954 kg. of copper and 7.885 kg. of silver per ton. The *Spurstein* is roasted for treatment by the Ziervogel process. The residues after desilverization contained in 1896 23.9 g. of silver per 100 kg. of copper, which was lower than in any previous year. These residues, which contained 74.14% Cu, are reduced and refined at the Gottesbelohnungshütte and at the Saigerhütte. The copper bottoms are refined electrolytically at the Oberhütte.

THE COPPER WORKS AT KEDABEG AND KALAKENT, RUSSIA.

BY GUSTAV KOLLE.

THESE mines and smelting works are situated in the Government of Elisabethpol, in the district of the same name, about 60 versts (64 km.) southwest of Elisabethpol, and 42 versts (44.8 km.) from the Dalliar station on the Transcaucasian Railway. They have been worked by Messrs. Von Siemens since 1864.

The Kedabeg ores occur in irregular bodies and bunches, more or less connected, and lying in quartz-trachite which has broken through the surrounding diorite. Mining has been carried on in eight such ore bodies. The ore is mainly composed of iron pyrites, copper pyrites, covellin (CuS), blende, and magnetic pyrites. Copper glance occurs more rarely, as well as small quantities of native copper. Malachite and azurite are extremely rare. Sulphate of barium is very common, and in conjunction with large quantities of blende makes the smelting difficult. Quartz and quartzite are also found.

The ore bodies have been opened by numerous adits (12 in all), through which the ore is brought to the surface and to the spalling house, where a separation is made into coarse and fine, the latter making up about two-thirds of the whole. A further separation is made into rich material with over 5% (average 7%) copper, which is sent directly to the furnaces, and poor material with less than 5% (average 3%), which goes to the lixiviation plant.

The method of smelting employed is a combination of the English and German systems of reverberatory and shaft-furnace practice. The fuel used is naphtha from Baku, anthracite from the Donetz, wood, and charcoal. The naphtha (crude naphtha or naphtha residue) is pumped to the Kedabeg works, situated 4,500 ft. above sea level, by a pipe line from Dalliar, 42 versts (44.8 km.) distant. For this purpose two pumping stations were found to be necessary. The lower Worthington pump works under a pressure of 110 to 130 atmospheres, the conveying pipes being made of Mannesman steel, as they have to stand a pressure of over 100 atmospheres. In the upper portion, 20 versts (21.3 km.) long, the line consists of lap-welded pipe as far as Kedabeg. This pumping plant works very satisfactorily, the cost per poud of naphtha delivered at the works being only 20 kopecks ($4.44 per metric ton).*

The anthracite must be transported by wagon from Dalliar and costs at Kedabeg 35 kopecks per poud ($7.79 per metric ton). Notwithstanding this high cost it is a highly prized fuel at the works. Wood and charcoal are obtained from forests owned by the works, comprising an area of about 22,000 dessiatines (24,035 hectares or 59,393 acres). A narrow gauge (1 m.) railroad, 32 versts (34 km.) in length, connects these lands with the works both at Kedabeg and Kalakent. The latter works were built to utilize the existing water power and at the same time to provide return freight for the road. Nevertheless wood and charcoal are dear, one poud of cordwood costing in Kedabeg 8 kopecks ($1.77 per metric ton) and one poud of charcoal 22 kopecks ($4.88 per metric ton).

The details of the smelting of rich ores are as follows: The ore is first desulphurized, say to 6 or 8% S, the coarse ore being roasted in kilns, the fine in Gerstenhöfer furnaces, and the intermediate sizes in hand reverberatories. No

---

* In this article the value of the ruble has been reckoned at 38c., United States currency.

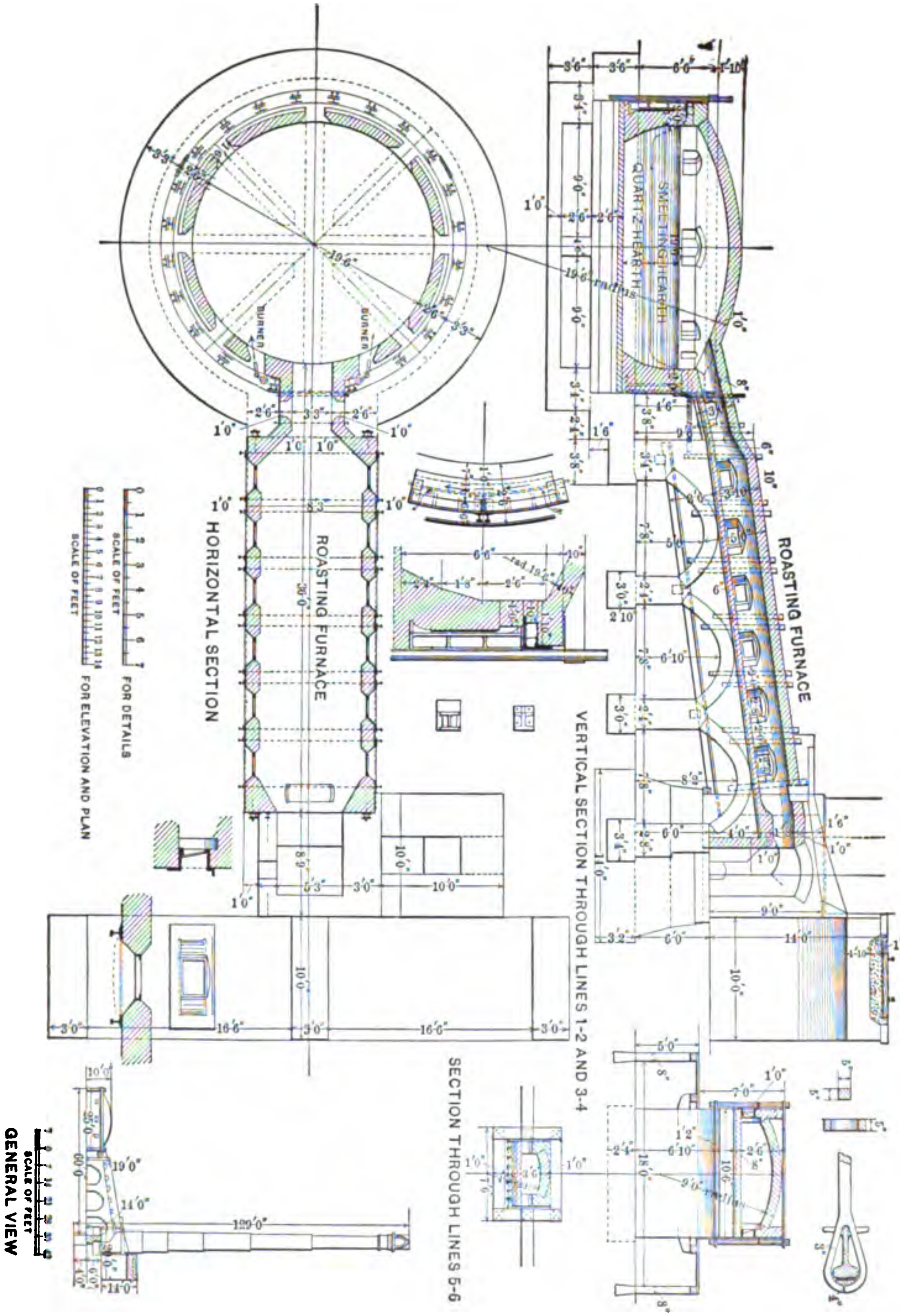

Roasting and Smelting Furnace, Kedabeg Copper Smelting Works.

sulphuric acid is made, as the high freight rate prohibits competition with works more favorably situated. The ore then undergoes a fusion for matte in large circular reverberatories (inside diameter 6 to 6.7 m.), designed after the system of Friedrich Siemens. The fuel used is naphtha. The atomized naphtha is burned at the nozzles shown in the drawing, the flame passing completely around the furnace in a horseshoe-shaped path, then through the hand-reverberatory roasters into the stack. The products of the first fusion are: Raw matte with 23 to 30% Cu, 38 to 40% Fe, 4 to 5% Zn, 8 to 9% $BaSO_4$, and 20 to 22% S; slag with 24 to 30% SiO_2, 48 to 50% FeO, 3% ZnO, 12 to 15% $BaSO_4$, 0.6 to 0.8% Cu.

The capacity of each furnace per 24 hours is 1,800 pouds (29,484 kg.) of ore, and the consumption of naphtha 280 to 300 pouds (4,586 to 4,914 kg.). Six furnaces are in use.

The raw matte is pulverized and roasted first in kilns, and then in heaps upon wooden beds, down to not more than 3% S, which is necessary for the formation of matte in the subsequent smelting. The greater part of this roasted matte is sent by rail to Kalakent. It is smelted for blister copper with 88 to 90% Cu at both works with anthracite or charcoal in 14-ft. high furnaces with three tuyères (water cooled). The matte which is formed in this smelting (amounting to 4 to 5% of the charge) carries 50 to 60% Cu, the slag assays 0.8 to 0.9% Cu. The slag is returned for the most part to the blast furnace, a small portion being utilized in the first smelting in reverberatory furnaces, while the remainder is discarded. The matte is roasted and smelted with the ore in the reverberatory furnaces. The consumption of anthracite per 100 pouds of roasted matte is 20 to 22 pouds (200 to 220 kg. per metric ton); of charcoal, when used, 38 to 42 pouds (380 to 420 kg. per metric ton). Nine blast furnaces of this type are in use.

The blister copper is refined in three furnaces of the type shown in the accompanying engraving. The hearth is made of layers of quartz stamped down or burnt in, and the arch of firebrick, manufactured on the premises. Naphtha, vaporized by compressed air, is used as fuel. The refining is carried on in the usual way, except that air is blown on the copper bath to accelerate the oxidation. When the copper is impure the poling is discontinued, and the oxidation is carried beyond the cessation of ebullition (*Braten*), and then the copper is poled until it is tough. The refinery slag is returned to the blast furnace and smelted with the matte for pig. The consumption of naphtha per 100 pouds of pig is 33 pouds (330 kg. per metric ton). The refined copper is cast either into blocks of 1 poud (16.38 kg.), or into ingots of 0.5 poud (8.19 kg.), or into anodes for the electrolytic refinery.

The electrolytic refinery is at Kalakent. It was erected for a capacity of 25,000 to 30,000 pouds (409.5 to 491.4 metric tons) of electrolytic copper per annum and consists of 102 vats and three dynamos. The vats are different from those ordinarily used, as the solution in each circulates separately and independently of the others. This is effected by means of geyser pumps, invented by the late Herr von Siemens, each vat having two for the purpose of elevating the solution. It is therefore possible to have the solution circulating separately in each vat, or to join the vats into groups, whereby the chemist can check the work in each vat or group of vats.

The copper solution is prepared partly by leaching the roasted ores and eliminating the iron by heating in pans, but the greater part is made by dissolving copper with the free sulphuric acid contained in the old and unserviceable refinery solutions. In the last method an elimination of As, Sb, Sn, and Fe must follow.

The vats are placed in series, and are lined with jute soaked in asphalt. Each one contains 16 anodes and 15 cathodes. A current density of 25 to 30 ampères per square meter of cathode surface is generally used. The solution is maintained at a strength of 4 g. copper and 8 to 9 g. sulphuric acid per 100 c.c. A tension of 0.15 to 0.25 volts exists at each vat.

The refined copper from Kedabeg contains 0.08% of precious metals, a little less than 0.06% of which is gold, and consequently the electrolytic refining is not especially profitable, as in addition the difference in Russia between the selling price per poud of electrolytic and refined copper is only 50 to 80 kopecks (1.11 to 1.78c. per kg.).

The ores containing less than 5% Cu, say about 3%, and which consequently would not bear the cost of direct smelting, are treated by a leaching process. The method is very simple and well adapted to the local conditions, which scarcely permit of the use of salt or other decomposing reagents. The ore is cheaply roasted in kilns or Gerstenhöfer furnaces without fuel, the copper being thus brought into a suitable form for leaching. This presents no great difficulty, as the copper, originally existing as a sulphide, is oxidized partially to sulphate in the furnace, the sulphatization being completed to a certain extent later during the leaching by the ferric sulphate formed in the roasting and also present in the residual solutions from the electrolytic precipitation, the latter being run into the leaching ponds. A comparatively long time is required to obtain a practically complete change of the copper to sulphate, several years' leaching being necessary to reduce the copper contents to 0.5 or 0.7% Cu. However, from 50 to 70% are obtained at a very small cost in the first year. The whole plant is in the open, without covering or roof, and on sloping ground which could not be used by the works for any other purpose. The ground, very impermeable to begin with, is completely hardened by the decomposition of basic salts of iron. The copper is precipitated in wooden vats by means of scrap iron, a rapid circulation being kept up all the time. In this way 25,000 pouds (409.5 metric tons) of cement copper, with 65 to 75% Cu, are produced per annum.

The year 1897 not being closed at the writing of this paper, only an approximation of the production can be given. It will be about 96,000 pouds (1,572.5 metric tons) of refined copper, and 25,000 pouds (409.5 metric tons) of electrolytic copper, a grand total of 121,000 pouds (1,982 metric tons). In addition 62 to 63 pouds (1,015.6 to 1,031.9 kg.) of slimes, containing precious metals, will be produced in the electrolytic refinery, which should contain 1.25 pouds (20.5 kg.) of gold and 18.75 pouds (307.1 kg.) of silver. All the copper produced is consumed in Russia. The refined copper is sold to Messrs. Wogau & Co., and the electrolytic to Messrs. Siemens & Halske for electrical purposes. The anode slime is exported to Germany. The amount of ore smelted during the year was 2,250,000 pouds (36,855 metric tons).

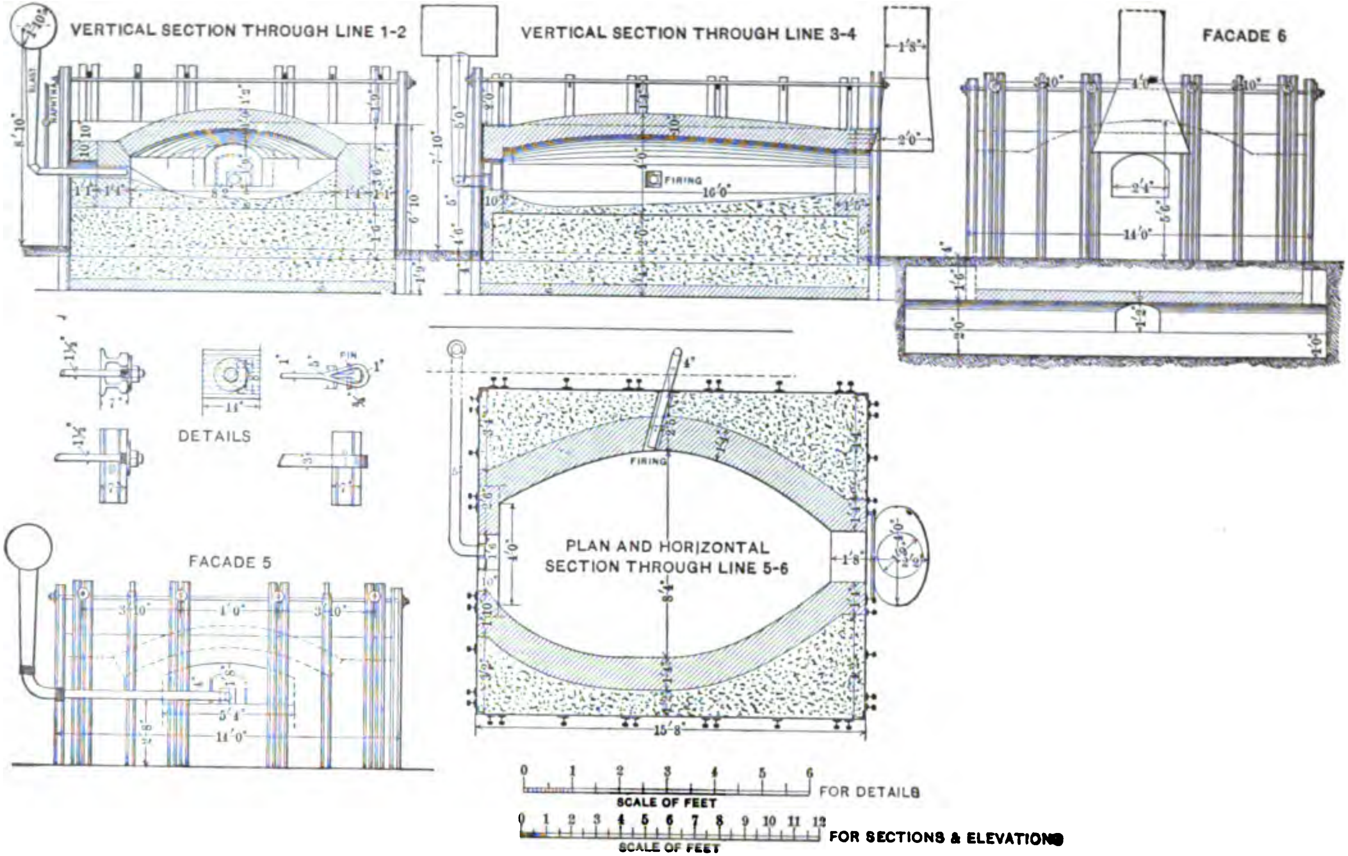

KEDABEG COPPER SMELTING WORKS; REFINING FURNACE.

CRYOLITE.

THERE is a large consumption of cryolite in the United States, although none of the mineral is produced here, the entire supply being derived from Greenland. The occurrence, properties, and uses of this mineral have been described in previous volumes of THE MINERAL INDUSTRY, especially in Vol. II., to which reference should be made. An account of the recent developments of the mine in Greenland, and the present condition of its exploitation, is given by William C. Henderson in the *Journal of the Franklin Institute* for January, 1898, of which paper the following is an abstract:

Ivigtut (an Eskimo word, meaning "a meadow") is located in latitude 61° 10′ north, and longitude 48° 10′ west, on the Arksuk Fiord, 20 miles from the coast of southwest Greenland—inaccessible during the greater portion of the year, and barren of all commercial products, save cryolite. The inhabitants are solely the officers and men who operate the mines, all of whom come from Copenhagen. The food consumed by the people is almost exclusively supplied from Copenhagen, and consists chiefly of rye bread and salt meat, with fresh meat once or twice a week. The nearest Eskimo settlement to Ivigtut is at Isua, 8½ miles distant.

Remote from civilization as is this isolated deposit of cryolite, at no other point, in Greenland, at least, could it have been more accessible for removal, no portion of the mineral being at a greater distance than 150 ft. from low-water line, and its general elevation not exceeding 10 ft. from high water. Its greatest length extends in a direction parallel to the sea in a line running northeast and southwest, covering a distance of about 400 ft., 100 ft. of which is washed by the sea. That portion nearest, and facing the sea, descends perpendicularly to an unknown depth; that furthest from the water sinks at an angle of about 45° from the sea. The width in the opposite direction, that is, southeast to northwest, is about 150 ft.

The deposit is owned by the Danish government. The mining of the mineral is conducted exclusively by a Copenhagen company, by virtue of a lease held by it from the government. By the terms of this lease the value of every fifth cubic fathom of cryolite mined and shipped from Greenland falls to the Danish treasury, whether the cargo be lost on the voyage from Greenland or not. The mines were opened by Daniel Schmidt in 1858. The first cargo of commercial note was shipped from Ivigtut to Copenhagen in 1857, and the first shipment to the

United States was made in 1864. In January, 1865, a contract was completed with the Handels Selskabet of Copenhagen (operators of the mines at Ivigtut), by which the Pennsylvania Salt Manufacturing Co. of Philadelphia became possessed of the exclusive privilege to import the mineral from this deposit into the continents of North and South America.

That portion of the mine which may more properly be termed the quarry at present measures about 300 ft. in length, 150 ft. in width and 120 ft. in depth. Three test holes have been sunk deeper into the mass, one of which is now about 120 ft. below the bottom level of the quarry, but even at this depth there are no indications that the lower boundary of the mineral has been approached.

During the summer season, which lasts from about April to November, about 140 men are employed in quarrying, mining, sorting, and piling the cryolite. The drilling is done by hand, and the mineral blasted out. It is carefully sorted into two grades, Nos. 1 and 2, of about 99% and 92% respectively, which are raised to the surface and accurately formed into piles exactly 100 ft. long, 20 ft. wide and 4 ft. high, containing 8,000 cu. ft., or about 37 cu. fathoms. The weight of a cubic fathom of cryolite is 13.6 tons of 2,240 lb. The greatest quantity of cryolite taken from the mines in any one season was in 1897. It amounted to 13,000 tons, of which 10,500 tons were received at Philadelphia. The best grade goes to Copenhagen; the second quality to Philadelphia.

The waste is dumped into the sea, after a regular system, for the purpose of building wharves and securing more reachable anchorage. This is extremely desirable, owing to the remarkably precipitous character of the coast. Just before winter sets in a sluice is opened and the mines are flooded with sea-water. The object of this is to prevent an accumulation of ice and snow in them which would not melt in the ensuing summer. The force of men is then cut down to about 70, who are occupied in quarrying such cryolite as can be reached. Rails have been laid during the winter upon the ice in the quarry, and the whole operation carried on the same as in summer, except upon a much-reduced scale. This, however, has not been found to be thoroughly practicable. As soon as the general thaw takes place steam pumps are put to work, the mines drained of water (an operation requiring about three weeks to perform), and work is again resumed in the bottom.

The vessels employed in the cryolite trade are stanch craft, built expressly for the purpose. The Philadelphia fleet consists of eight barks, having an average burden of 800 tons; while three small vessels, with an average of 300 tons, comprise the Copenhagen fleet. These make two trips to the mines a year, arriving at Ivigtut, on the first trip, about April 10th, and on their second one, July 10th.

IMPORTS OF CRYOLITE INTO THE UNITED STATES.

Year.	Short Tons.	Year.	Short Tons.	Year.	Short Tons.	Year.	Short Tons.	Year.	Short Tons
1883....	8,113	1886.....	9,190	1889.....	9,085	1892.....	8,081	1895.....	10,640
1884....	8,810	1887.....	11,534	1890.....	8,062	1893.....	10,560	1896.....	3,370
1885....	9,172	1888.....	8,180	1891.....	9,783	1894.....	9,986	1897.....	11,329

FLUORSPAR.

The production of fluorspar in the United States in 1897 was 9,025 short tons, against 6,000 short tons in 1896. This was mined chiefly at Rosiclare, Ill., but there was some produced in the adjacent district (Southern Illinois), and at Marion, Ky., where there is a similar formation to that which exists in Illinois. The geology of these was described fully in THE MINERAL INDUSTRY, Vol. II., to which reference should be made.

There were no important developments in the industry in 1897. The demand was small, though materially greater than in 1896, as shown by the statistics, and sales were chiefly for carload lots. Under favorable conditions, any of the producers could probably increase materially his output. The mines at Rosiclare were in steady operation throughout the year, employing about 60 men. They produce a small quantity of lead ore in addition to the fluorspar. The products are shipped entirely by the Ohio River. The Fluorspar Co. of St. Louis, which is a comparatively new concern, developed a new vein of fluorspar in Hardin County, Ill., during the year. This company works several veins. Its operations were checked somewhat at the end of the year on account of difficulty in securing cars, the car supply being short on account of heavy coal shipments.

PRODUCTION OF FLUORSPAR IN THE UNITED STATES. (IN SHORT TONS.)

Year.	Tons.	Value.	Per Ton	Year.	Tons.	Value.	Per Ton	Year.	Tons.	Value.	Per Ton
1886....	5,000	$22,000	$4.40	1890.....	8,250	$55,328	$6.70	1894.....	6,400	$38,400	$6.00
1887....	5,000	20,000	4.00	1891.....	6,320	38,000	6.00	1895	4,000	24,000	6.00
1888....	6,000	30,000	5.00	1892.....	9,000	54,000	6.00	1896.....	6,000	48,000	8.00
1889....	9,500	45,835	4.82	1893.....	9,700	63,050	6.50	1897.....	9,025	74,456	8.25

A considerable quantity of fluorspar is imported at New York from England, chiefly from Newcastle, but the customs' officers keep no separate record of these importations, and it is difficult to say precisely what they amount to. An analysis of fluorspar from Newcastle gave the following result: CaF 99.11%, Fe_2O_3 0.18%, Al_2O_3 0.07%, SiO_2 0.30%, H_2O 0.34%—total 100.00%. English fluorspar which sells at Newcastle for about $3.50 per short ton for small lumps and $3.80 for large lumps can be delivered in New York at a price which can hardly be touched by the American fluorspar on the Atlantic seaboard.

FULLER'S EARTH.

SINCE the discovery of fuller's earth in Florida about three years ago information as to its occurrence in the United States has spread rapidly and its production has increased largely. The output in 1896 was 11,326 short tons, valued at $68,476. In 1897 our reports amounted to a total of 17,049 short tons, valued at $91,634. Each year nearly the entire output was dug in the vicinity of Quincy, Fla.

Beds of fuller's earth have been reported from the neighborhood of Fairburn, Argyle, and Minnekahta, S. Dak.; south of Valentine, Neb.; near Parkdale Station, Colo.; two miles west of McConnellsville, N. Y.; at Enid, Indian Ter.; at Tampa and elsewhere in Florida, and at Rich Hill, Ga.

Fuller's earth includes many kinds of unctuous clays, gray to dark-blue in color. A typical analysis of fuller's earth from Reigate, England, which is an important source of supply, is as follows: Silica 53%, alumina 10, ferric oxide 9.75, magnesia 1.25, lime 0.50, potash, trace, sodium chloride 0.10, water 24—total, 98.60%. Fuller's earth resembles common clay in appearance, and the only way of identifying it with certainty is by practical tests of its clarifying effect on oils, which requires some experience, especially in the case of cottonseed oil. The color of the earth is an unreliable guide, since it varies greatly, and chemical analysis is not of much service. Fuller's earth has generally a high percentage of combined water, however, and rarely over 15% of alumina. Fuller's earth when dry adheres strongly to the tongue on account of its absorbent properties, but many ordinary clays do the same.

At Quincy, Fla., the deposits of fuller's earth lie from 3 to 8 ft. below the surface. There are two beds, each about 3 ft. thick, separated by a stratum of about 3 ft. of sand. The composition of the fuller's earth from Quincy is approximately as follows: Silica 63%, alumina 10, ferric oxide 2.5, lime 2.5, magnesia 3, water 15, potash and soda 1.

Fuller's earth was formerly used for removing grease spots from paper, etc., and in fulling cloth, whence its name. At the present time its chief use is for clarifying oils. In clarifying lard oil, the earth, ground to 120-mesh, is added to the hot oil and stirred for a short period. The oil is then passed through a filter press, the earth and coloring impurities being left behind. The degree of fineness of the fuller's earth is of great importance, and it is necessary to heat it well before use. In clarifying lubricating and similar oils fuller's earth is now being employed as a substitute for bone black.

GEMS AND PRECIOUS STONES.

The production in 1897 was valued at $101,000, against $200,000 in the previous year. We are now convinced that the statistics for 1896 were exaggerated. It is obvious that the collection of statistics concerning these stones is not capable of the same precision as in the case of the commercial metals. Of the production in 1897 we make the following division: Sapphire, $15,000; ruby, $1000; tourmaline, $5500; quartz crystal, $25,000; smoky quartz, $1500; gold quartz, $4000; agate, $1000; moss agate, $1500; silicified wood, $2500; garnet (pyrope), $2000; amazon-stone, $1000; turquoise, $30,000; fossil coral, $500; arrow-points, $500.

Turquoise was produced in the United States in 1897 in New Mexico and Nevada, chiefly in New Mexico, where several companies are engaged in the business. Among these are the American Turquoise Co., of New York; the Occidental & Oriental Turquoise Mining Co., of Silver City, N. Mex.; the Silver City Turquoise Mining Co., also of Silver City; and the Azure Mining Co., of New York. The Tiffany group of turquoise mines, 18 miles south of Santa Fé, which have been operated for several years by the American Turquoise Co., were sold out under a mortgage and bought in by some of the old owners, who organized a new company to operate them.

The existence of turquoise in Nevada is a new discovery. The mineral is found in Lincoln County, in the southeastern part of the State, at the foot of Sugar Loaf Peak. The country rock is mica schist. The zone in which the turquoise occurs is about half a mile wide and a little more than a mile long. In this zone there has apparently been no fissuring, with the exception of the intrusion of one large dike which is about 250 ft. wide and shows clearly for 4500 ft. in length. The largest and purest specimens of turquoise are found in this dike, sometimes showing on the surface, in nodules which vary from the size of a pin-head to an average walnut. Mr. George Simmons, of Vanderbilt, Cal., from whom we have received this information, reports that he has found several prehistoric workings and numerous stone implements.

Two cross-cuts have been driven to open the turquoise-bearing rock, one at a depth of 35 ft. and the other at about 20 ft. A shaft 25 ft. deep has also been sunk, besides several 10-ft. holes. The turquoise from this place has been marketed at Denver, New York, and Los Angeles. One stone weighing 64 carats was found, and another weighing in the rough 176 carats. Owing to the irregular shape of the latter, however, it would not cut to more than 88 carats. It was valued at $6000.

Dr. Gustav Eisen, of the California Academy of Sciences, reports the discovery of turquoise deposits in California, near the junction of California, Nevada, and Arizona. The rocks containing turquoise are scattered over an area of 30 to 40 miles, but the principal ones, both as regards quality and quantity, occur in a zone not more than 15 miles long by 3 or 4 miles wide. The mineral is found in seams and small pockets in volcanic rock. The deposits appear to have been worked in prehistoric time.

Sapphire.—The production of these stones as heretofore was made only in Montana. The occurrence of sapphire in this State, especially in Yogo Gulch, in Fergus County, was described by George F. Kunz in the *American Journal of Science,* Vol. IV., December, 1897, who says that as to the value of the Montana sapphire in jewelry it is hardly possible yet to predict how far it may be really important. Much beautiful material has already been obtained, but little of high value. That from the Missouri bars has had a wide range of color (light blue, bluish green, green, and pink) of great delicacy and brilliancy, but not the deep shades of blue and red that are in demand for fine jewelry. As semi-precious stones, however, they have considerable value.

The Yogo Gulch-Judith River region is more promising, the colors varying from light blue to dark blue, including some of the true "cornflower" tint so much prized in the sapphire of Ceylon. Others incline to amethystine and almost ruby shades. Some of them are "peacock-blue" and some dichroic, showing a deeper tint in one direction than in another; and some of the "cornflower" gems are equal to any of the Ceylonese, which they strongly resemble, more than they do those of Cashmere.

Quartz Crystal.—An important discovery of quartz crystal was made in the Green Mountain mine, Chile Gulch, Calaveras County, Cal. John E. Burton having been informed that nine years ago a few of these crystals had been found by the workmen when tunneling down the channel of the old river bed, whence they were taking out gold-bearing gravel, decided to continue the tunnel parallel with the old river bed at about 60 ft. from the center of the channel. The tunnel was thus continued for a total distance of 960 ft. Crystal was found in the last 160 ft., and nine drifts to the right and left also showed crystal, except the first one. The area of crystal-bearing gravel was consequently proved to be extensive. In about five months' work 24,495 lb. of crystal was produced. Some of these crystals were sufficiently large to cut balls from 8 to 14 in. in diameter. The largest single crystal weighed 152 lb., while a group of 47 crystals weighing 2200 lb. was obtained. According to George L. English the largest crystal ball in existence is a fraction more than 7 in. in diameter, and is owned by the Museum of Natural History in Paris. It was cut in Japan and was purchased for about $20,000. A ball slightly more than 6 in. in diameter, owned in New York City, cost $25,000. The Burton crystals are now being cut by Tiffany & Co., in New York, and until they are cut their value cannot be determined.

Gems and Precious Stones in Foreign Countries.

Diamonds.—Diamonds were discovered on the Rietfontein farm, about 20 miles from Pretoria, and one mile east of Van der Merwe Station on the Netherlands Railway, between Pretoria and Delagoa Bay, and on the top of a kopje on the Megaliesberg Range. According to all accounts the formation, which is more or less similar to that of Kimberley, is very promising. A new diamond field has been proclaimed by the Governor of Cape Colony in the district of Barkley West, Griqualand West.

According to the report of the De Beers Consolidated Mines for the year ended June 30, 1897, the receipts from diamonds produced were £3,722,099, the working expenses being £1,330,599. After charging off a large amount for depreciation and interest on obligations, there was left a profit of £2,032,561, out of which dividends amounting to £1,579,582 were paid. A balance of £683,048 remained at the end of the year. The production of the two chief mines of the company was as follows:

	De Beers.	Kimberley.	Total.
Blue ground hoisted, loads	1,548,963	972,926	2,575,889
Waste hoisted, loads	100,651	64,799	165,450
Blue ground worked, loads	1,932,800	1,078,488	3,011,288
Blue ground on floors, June 30	1,572,884	732,033	2,304,917
Diamonds obtained, carats			2,769,423
Average per load worked			0.92 carats.

The load is 1600 lb. In addition to the blue ground above reported, the company had 271,777 loads raised from the Premier mine, but this was not worked. The cost of mining per load was $1.27; cost of washing, 50 cents; total, $1.77, against $1.68 in the previous year. The yield of diamonds was 0.92 carats, against 0.91 karats in the previous year. The average amount received for diamonds sold was $6.45 per karat, against $6.43, and the value realized per load $5.93, against $5.85.

In washing the gravel in the De Beers works it was discovered that a shaking table with a rapid side motion when covered with grease of a certain consistency would hold the diamonds, while all the other minerals of which the deposit is composed would flow over the grease to the end of the table. Experiments with a small machine were so satisfactory that a number of large machines are now being constructed with a view of doing all the sorting mechanically.

The dividends paid by the De Beers Consolidated Mines since 1888 have been as follows:

1889	£789,791	1892	£987,239	1895	£987,239
1890	888,575	1893	987,239	1896	1,579,582
1891	987,239	1894	987,239		

The diamond-mining industry is steadily progressing in New South Wales. In 1896 prospecting work was carried out on all the leases on the Bingara field. It is estimated that the output from the field was 3000 carats, the lowest value obtained being 6s. per carat. The Boggy Camp diamond mines, situate about 15 miles west of Tingha, employ about 60 men. In some of the best mines on the field the wash is found 4 ft. thick, yielding about 10 carats to the load. The stones are of good quality and pure white.

An interesting occurrence of tin ore and diamonds is described in the report of the Department of Mines and Agriculture of New South Wales for 1896. Gravel containing cassiterite in workable quantity, together with diamonds, was discovered in that year at Boggy Camp, 15 miles west of Tingha, which has been for some time a productive tin field. The pay streak at Boggy Camp, which is from 30 to 50 ft. below the surface, averages from 2 to 7 ft. in thickness, the width of the lead not yet having been ascertained. One load of gravel yielded 515 stones of 184 carats aggregate weight, and 42 loads furnished 600 carats of diamonds, and tin-stone at the rate of 13 lb. per load. The pay streak is a quartz-pebble drift underlying a large hill of basalt. Mr. E. F. Pittman, the government geologist, who examined the occurrence, considers that the basalt filled what was originally an oval-shaped depression. The gravel rests on granite, and granite can be traced entirely around the basalt. The diamonds are white and of good quality, and it is thought that when the gravel is drained the district will make a considerable production.

Opal.—The opal-mining industry in Queensland is confined to the Cretaceous areas in the far West and Southwest, where this gem is met with at from a few feet from the surface down to 40 ft. It occurs as a rule in bands or beds that deviate very little from the horizontal, and which at one time formed the bottom of shallow inland seas. The majority of men engaged in this industry follow it only in spare time between other occupations.

The White Cliffs opal-field in New South Wales shows considerable development. The principal gem merchants in Europe have now agents on the field for the purchase of opal. At the present time there are 400 miners on the field, and all the claims are being fully worked. The value of the output is about £25,000 per annum.

Opals of good quality and apparently in commercial quantity have been found at the Tairua Valley, in the Cape Colville Peninsula, New Zealand. Another discovery was made beyond Mt. Somers in Canterbury. These stones also occur in the Ohinenuri Valley, and in connection with the last there is promise of an industry developing since a company has been organized in Auckland for their exploitation.

Rubies.—According to a patent[*] by Gin & Leleux artificial rubies are made from a mixture of 95% of alumina and 3% of sesquioxide of chromium, which are melted and volatilized in an electric furnace, heated by an alternating current, and the gaseous products led through a tube to a condensing chamber heated to 1500° C. To facilitate the formation of large crystals, a mixture of moist air and hydrochloric acid is forced under pressure into the tube; or, whilst moist air is passed through the tube, small quantities of fluoride of aluminium or cryolite are cast on to the hearth of the furnace from time to time, thus causing the formation of hydrofluoric acid. The fine crystalline deposit formed in the condensing chamber and tube is removed periodically, and can be utilized in place of emery.

Topaz.—New deposits of topaz of various color and valuable as a gem have been discovered in the neighborhood of Ekaterinburg, which is the center of the Russian trade in topaz, as well as in other precious stones. The production of precious stones in the Ourals is increasing in importance, especially that of sapphire and alexandrite, the latter being remarkable for its green reflections by day and ruby color by night.

---

[*] Eng. Patent No. 19,962, Sept. 9, 1896.

GOLD AND SILVER.

THERE was a large increase in the world's production of gold in 1897, to which nearly all the important gold-producing regions contributed. Over 90% of the total supply of gold is furnished by seven countries, namely, the United States, the Transvaal, Australia, Russia (Siberia), British India, Canada, and Mexico, and of these every one except Russia showed an increase, and in most cases a large increase. It is especially noteworthy that the immense gold production of the Transvaal is derived to the extent of 90% from one district of comparatively limited area, while practically the entire product of British India comes from a single group of mines. In the other countries there are numerous gold-producing districts, widely scattered geographically.

It is impossible to attribute the great gain in production in 1897 to any special cause. There was, it is true, a new discovery in British America (the Klondike) which attracted world-wide attention and excited a popular interest reminiscent of 1849, but the actual production of the new diggings, according to the estimate of Dr. Dawson, of the Dominion Geological Survey, was only $2,500,000, and this is only a small part of the world's increase last year. The latter was, undoubtedly, caused by the continuation of the conditions favorable to gold production which have been operative during the last five or six years, namely, the cheapening of production by improvements in mining methods and metallurgical practice; the diversion of attention from silver mining to gold mining, on account of the decrease of profit in the former; the increased profit in gold mining in countries whose finances are on a silver basis; and the growing tendency of capital to seek investment in gold mining as an industry which aims at the production of a metal that nominally at least is not subject to market fluctuations. The result has been a gold production in 1897 larger than ever reported previously and twice that of only 10 years ago.

Notwithstanding the heavy decline in the value of silver which occurred during the summer of 1897, the world's production of that metal also increased. The details of the production of gold and silver are given in the following tables, compiled from official statistics, except the figures for the United States, which are based on reports received directly by THE MINERAL INDUSTRY. The returns where made in crude metals have been carefully reduced to the common basis of fine metal:

GOLD PRODUCTION OF THE WORLD.

Countries.	1895.			1896.			1897.		
	Fine Ounces.	Kilograms.	Value.	Fine Ounces.	Kilograms.	Value.	Fine Ounces.	Kilograms.	Value.
North America:									
United States	2,265,612	70,468	$46,830,200	2,558,433	79,576.0	$52,886,209	2,864,576	89,092.0	$59,210,795
Canada	92,449	2,876	1,910,921	134,491	4,183.1	2,780,086	299,468	9,313.9	6,190,000
Newfoundland	....	....	....	3,000	93.3	62,010	3,000	93.3	62,010
Mexico	270,924	8,427	5,600,000	305,216	9,493.2	6,309,181	344,498	10,715.0	7,121,189
Central America	23,222	722	480,000	24,127	750.4	498,450	25,399	789.9	525,000
South America:									
Argentina	4,500	140	93,015	15,235	473.8	314,907	15,235	473.8	314,907
Bolivia	3,144	98	65,000	3,144	98.0	65,000	3,144	98.0	65,000
Brazil	108,000	3,359	2,232,360	58,033	1,805.0	1,199,603	70,732	2,200.0	1,462,120
Chile	68,096	2,118	1,407,544	68,096	2,118.0	1,407,544	68,096	2,118.0	1,407,544
Colombia	154,000	4,890	3,183,180	174,165	5,416.8	3,600,000	188,679	5,868.7	3,900,000
Ecuador	3,800	118	78,546	6,430	199.9	132,900	6,430	199.9	132,900
Guiana (British)	122,936	3,824	2,541,077	107,773	3,351.9	2,227,662	101,505	3,156.9	2,098,098
Guiana (Dutch)	28,228	878	583,473	23,523	731.6	486,233	32,963	1,025.3	681,748
Guiana (French)	90,261	2,807	1,865,695	82,115	2,553.9	1,697,332	59,859	1,861.7	1,237,310
Peru	5,658	176	116,951	5,639	175.4	116,571	5,787	180.0	119,628
Uruguay	6,884	213	144,600	6,880	213.9	144,600	6,880	214.0	144,600
Venezuela	41,200	1,281	859,604	39,384	1,224.9	814,067	39,384	1,224.9	814,067
Europe:									
Austria-Hungary	88,500	2,753	1,829,300	105,397	3,278.2	2,178,556	105,397	3,278.2	2,178,556
France	11,640	362	240,600	10,518	327.0	217,304	10,518	327.0	217,304
Germany	114,087	3,547	2,357,144	79,960	2,487.0	1,652,773	89,412	2,781.0	1,848,146
Italy	9,002	280	186,071	8,832	274.7	182,557	8,832	274.7	182,557
Norway	500	16	10,335	500	15.5	10,335	500	15.5	10,335
Russia	1,537,584	47,825	31,781,851	1,499,947	46,653.2	31,005,717	1,046,956	32,408.2	21,538,490
Sweden	30,225	940	624,750	3,682	114.5	76,107	3,682	114.5	76,107
Turkey	392	12	8,000	387	12.0	8,000	387	12.0	8,000
United Kingdom	6,600	205	136,422	1,353	42.1	27,967	1,353	42.1	27,967
Asia:									
China	225,000	6,998	4,650,750	321,296	9,992.8	6,641,190	321,296	9,992.8	6,641,190
India (British)	218,186	6,786	4,509,905	296,494	9,221.4	6,128,530	353,147	10,983.4	7,299,554
Japan	21,000	653	434,070	34,509	1,073.3	713,300	34,509	1,073.3	713,300
Korea	10,000	311	206,700	34,918	1,086.0	721,765	34,918	1,086.0	721,765
Malay Peninsula	20,000	622	413,400	25,000	777.6	516,750	25,000	777.6	516,750
Borneo	2,500	78	51,675	3,628	112.9	75,000	4,837	150.5	100,000
Africa:									
Witwatersrand	1,811,391	56,340	37,443,637	1,832,329	56,988.0	37,874,240	2,511,544	78,112.6	51,918,607
Other districts, S.A.R.	206,252	6,415	4,263,511	193,544	6,018.5	4,000,557	232,466	7,230.0	4,805,072
West Coast	32,203	996	661,630	39,585	1,231.0	818,225	24,276	755.0	501,798
Madagascar	19,351	6,028	400,000	19,351	601.8	400,000	19,351	601.8	400,000
Australasia, 7 cols.	2,070,335	64,396	42,793,824	2,092,446	65,070.0	43,250,853	2,584,894	80,398.6	53,429,759
Totals	9,723,612	307,958	$198,995,741	10,219,355	317,831.6	211,242,061	11,548,925	359,040.6	$238,616,168

There is no doubt that statistics which are arrived at by direct returns of the producers always understate the truth. This is because there is invariably a small part of the production, usually that of petty concerns, which escapes record, while the ease with which gold may be disposed of offers great inducement to theft, and moreover the production in several countries is subject to heavy imposts, which it is an object to avoid. Thus we know that there is a good deal of gold carried clandestinely from Siberia into China, and there is also gold produced by Chinese in California and elsewhere in the United States which is taken by them to China and does not appear in the statistics, which are based on reports of deposits at the United States Mint and the production of American refiners. Some of this gold is reckoned subsequently as of Chinese origin by taking the difference between the imports into China and the exports from that kingdom, but it is questionable if all of it is thus accounted for; probably it is not. Similarly there is undoubtedly some gold exported clandestinely from Mexico, the export tax which the Mexican government levies being an incentive to this. Probably a good deal of this gold appears subsequently in the American reports, but it is equally probable that the whole of it is not so included. It is well known that there is a considerable amount of gold stolen by the operatives in the mills of the Transvaal and disposed of clandestinely, some authorities stating that this amounts to 10% of the output.* There is no doubt, also, that in Siberia a large percentage of the gold production is stolen, and we have, consequently, added 10% to the statistics reported officially by the Russian government. According to D. Levat and Theodore Sabachnikoff, at least 20% of the gold produced by the placers of the Onon is stolen. These placers present particular inducements to theft, owing to the proximity of the Chinese frontier, over which stolen gold can easily be carried, and the existence in the neighboring villages of an organized band of buyers· The method of working the placers, namely, by the lease or contract system, is also conducive to robbery, and it is notorious that the workmen prefer those places where the food supply is comparatively poor while the managers are careless, to those where the men are better treated and better paid but are strictly watched.† Loss of gold in this way is undoubtedly suffered in all the mining districts of Siberia, though perhaps not to the same extent as in those of the Onon. In Queensland in 1896 the banks purchased 4,000 oz. of gold more than was returned officially to the Mines Department, even after making a liberal allowance for gold obtained by "fossickers" and odd parcels. A similar excess usually occurs with respect to the Queensland statistics.

With this evidence there is no doubt whatever that the actual production of gold in the world is considerably greater than the amount reported in the above table.

SILVER PRODUCTION OF THE WORLD. (a)

Countries.	1896.			1897.		
	Troy Ounces.	Kilograms.	Commercial Value.	Troy Ounces.	Kilograms.	Commercial Value.
North America:						
United States	58,488,810	1,819,208.0	$39,245,991	56,457,292	1,756,004.0	$33,755,815
Canada	3,205,343	99,696.5	2,150,785	5,558,446	172,885.6	3,323,395
Mexico	47,985,914	1,492,517.0	32,198,548	54,052,647	1,681,212.0	32,318,078
Central American States	1,623,575	50,500.0	1,089,419	1,623,575	50,500.0	970,735
South America:						
Argentina	328,262	10,210.0	220,264	328,262	10,210.0	196,508
Bolivia	11,500,000	357,684.0	7,716,500	10,500,000	326,584.0	6,277,950
Chile	4,870,725	151,500.0	3,268,256	4,870,725	151,500.0	2,812,206
Colombia	1,646,080	51,200.0	1,104,519	1,646,080	51,200.0	985,191
Ecuador	7,716	240.0	5,177	7,716	240.0	4,610
Peru	2,254,525	70,123.0	1,512,786	1,876,590	58,368.0	1,121,013
Europe:						
Austria	205,546	6,393.0	137,921	205,546	6,393.1	122,896
Hungary	637,853	19,839.3	427,999	637,853	19,839.3	381,372
France	2,265,970	70,479.0	1,520,466	2,265,970	70,479.0	1,354,823
Germany	13,774,419	428,429.0	9,242,635	14,405,834	448,068.0	8,613,248
Italy	1,224,149	38,075.0	821,404	1,224,149	38,075.0	731,939
Norway	151,748	4,720.0	101,823	151,748	4,720.0	90,730
Russia	336,208	10,457.0	225,592	280,132	8,713.0	167,490
Spain	2,075,476	64,554.0	1,392,644	4,211,781	131,000.0	2,518,224
Sweden	66,948	2,082.3	44,922	66,948	2,082.3	40,128
Turkey	49,029	1,525.0	32,898	49,029	1,525.0	29,314
United Kingdom	288,826	8,827.9	190,447	288,826	8,827.9	169,699
Asia:						
Japan	2,508,067	78,009.0	1,682,913	2,508,067	78,009.0	1,499,580
Australasia	21,216,534	659,902.7	14,236,294	16,078,604	500,096.5	9,613,397
Totals	176,706,718	5,496,177.7	$118,570,208	179,290,820	5,576,531.7	$107,197,961

(a) The average commercial value of silver was 67.1c. per troy oz., or $21.58 per kg., in 1896; in 1897 it was 59.79c. per troy oz., or $19.223 per kg. The U. S. Mint average in 1897 was 60.354c.

---

* In a speech delivered at Johannesburg, Feb. 24, 1898, Mr. Albu, a member of the Industrial Commission, said that he thought that at least 30,000 oz. of gold illicitly obtained found their way to England every month.

† *Engineering and Mining Journal*, Feb. 6, 1897.

UNITED STATES.

The production of gold in the United States increased from $52,886,209 to $59,210,795. The production of silver decreased from 58,488,810 oz. to 56,457,292 oz. These statistics of gold and silver production are compiled with the greatest care from returns made by all the refiners and others direct to THE MINERAL INDUSTRY, but in the distribution of the totals the figures compiled by Mr. H. A. Lee, Commissioner of Mines, have been used for Colorado, and those of Mr. E. B. Braden, U. S. Assayer, of Helena, Mont., have been used for the States of Montana, Oregon, Utah, and Washington.

PRODUCTION OF GOLD IN THE UNITED STATES.

State or Territory.	1894.		1895.		1896.		1897.	
	Fine Ounces.	Value. (a)	Fine Ounces.	Value. (a)	Fine Ounces.	Value. (a)	Fine Ounces.	Value. (a)
Alaska	53,868	$1,113,550	78,140	$1,615,300	99,444	$2,055,700	130,624	2,700,000
Arizona	96,313	1,990,966	95,072	1,965,300	124,770	2,579,000	130,624	2,700,000
California	656,468	13,570,397	722,171	14,928,600	737,036	15,235,900	725,689	15,000,000
Colorado	461,969	9,549,731	648,074	13,525,300	719,264	14,867,971	947,249	19,579,637
Idaho	100,682	2,081,281	86,088	1,779,600	104,263	2,155,300	96,759	2,000,000
Michigan	2,150	44,444	2,075	42,900	1,800	37,200	(c)	(c)
Montana	176,637	3,651,410	198,405	4,101,400	209,207	4,324,700	217,534	4,496,431
Nevada	55,042	1,137,819	75,088	1,552,200	116,620	2,410,538	145,138	3,000,000
New Mexico	27,465	567,751	23,810	492,200	23,017	475,800	22,738	470,000
Oregon	68,792	1,422,056	42,972	888,300	59,313	1,226,000	65,534	1,354,593
South Dakota	159,594	3,299,100	187,187	3,869,500	237,978	4,919,000	256,410	5,300,000
Southern States (b)	11,715	242,171	15,026	310,600	12,785	264,300	12,082	249,737
Utah	41,991	868,031	66,419	1,373,000	91,908	1,899,900	89,305	1,845,938
Washington	9,438	195,100	16,980	351,000	19,626	405,700	21,754	449,664
Other States	1,495	30,903	1,693	35,000	1,413	29,200	3,136	64,795
Total domestic	1,923,619	$39,761,205	2,265,612	$46,830,200	2,558,433	$52,886,209	2,864,576	59,210,795
Foreign	117,765	2,434,202	217,234	4,490,227	409,315	8,461,023	584,983	12,091,599
Grand total	2,041,384	$42,195,407	2,482,937	$51,320,427	2,967,737	61,347,232	3,449,559	71,302,394
Total domestic—kgms.	59,824	....	70,468	....	79,576	....	89,092	....
Total foreign—kgms.	3,653	....	6,761	....	12,731	....	18,194	....
Grand total—kgms.	63,487	....	77,229	....	92,307	....	107,286	....

(a) 1 oz. gold = $20.87; 1 kg. = $664.60. (b) South Carolina, North Carolina, Georgia and Alabama. (c) Included with other States.

PRODUCTION OF SILVER IN THE UNITED STATES.

State or Territory.	1895.		1896.		1897.	
	Troy Ounces.	Commercial Value. (a)	Troy Ounces.	Commercial Value. (a)	Troy Ounces.	Commercial Value. (a)
Alaska	74,616	$48,724	150,000	$100,650	250,000	$149,475
Arizona	859,739	561,174	2,000,000	1,342,000	1,332,292	796.577
California	463,910	302,933	600,000	402,600	757,300	452,790
Colorado	17,891,626	11,687,150	22,500,000	15,097,500	21.278,202	12,722,227
Montana	15,046,409	9,825,305	15,720,000	10,548,120	16,807,346	10,049,112
Idaho	3,425,653	2,236,951	5,400,000	3,623,400	6,000.000	3,587,400
New Mexico	409,549	267,430	700,000	469,700	350,000	209,265
Nevada	807,230	527,120	1,200,000	805,200	1,500,000	896,850
Utah	6,579,043	4,296.115	8,842,810	5,933,526	6,689,754	3,999,804
Oregon	11,686	7,631	61,100	40,998	84,802	50.703
South Dakota	70,226	45,858	450,000	301,950	500,000	298,950
Texas	529,974	346,073	525,400	352,543	600,000	358,740
Washington	98,523	64,336	274,900	184,458	242,781	145,159
Other States	57,411	37,496	64,600	43,347	64,815	38.753
Totals	46,331,235	$30,254,296	58,488,810	$39,245,992	56,457,292	$33,755,815

(a) The average value in 1896 was 67.1c. per oz. and 59.79c. in 1897.

Alaska.—The production of gold in 1897 was $2,700,000 against $2,055,700 in 1896. There would undoubtedly have been a larger increase had it not been for the discovery of gold in the Klondike (described under Canada), which caused the miners who had been at work in the vicinity of Circle City to desert those diggings to go to the new ones. There had previously been a considerable production of gold in the American Yukon. In 1893 this amounted to $200,000; in 1894 to $409,000; in 1895 to $709,000; and in 1896 to $800,000. The quartz mines of Douglas Island are increasing their production and are making preparations for work on a still more extensive scale. The Alaska-Treadwell Co. has undertaken the erection of a 300-stamp mill, and the Alaska United will build one of 120 and one of 100 stamps. The mines of these companies are reported as being in excellent condition, and a recent estimate of the workable ore in sight in the Treadwell, by the company's engineers, came to a very large amount. There were 549 stamps in operation last year in Alaska.

Arizona.—The production of gold in 1897 was $2,700,000, against $2,579,000 in 1896. The production of silver was 1,332,292 oz. The increase in the production of gold was due chiefly to the Pearce and Fortuna mines.

The most productive mine in Arizona at the present time is the Pearce, at the camp of the same name in Cochise County, which is operated by the Commonwealth Mining Co. This mine exhibits a quartz vein of remarkable width and length. Up to the middle of 1897 the ore shoot had been exploited for a horizontal distance of 400 ft., to a depth of 300 ft., and for an undetermined thickness ranging from 16 to upward of 60 ft. Shipments for the previous six months had averaged about 2,000 tons per month. The ore is quartzose and ferruginous, carrying free gold, and silver as chloride, bromide, etc. In the upper levels the proportion of silver to gold was about 2.5 : 1. In the lower workings it has changed gradually to about 1 : 1. At first the ore was shipped entirely to smelters, but during 1897 a pan-amalgamation mill of 40 tons per day capacity was built.

Another large producer of gold in Arizona in 1897 was the Fortuna mine, situated about 13 miles south of Blaisdell Station, in Yuma County, which is said to have yielded about $80,000 per month during the latter part of the year. The ore, which is free milling, is crushed at the rate of 80 tons per day by 20 stamps of 1,350 lb. each. The bullion assays 890 fine in gold. For the first four months' run of the mill there were crushed 6,300 tons of ore assaying $40 per ton, of which $35 was saved. The lode has been opened to a depth of 450 ft.

California.—The production of gold in California in 1897 was $15,000,000, against $15,235,900 in 1896. The districts of Placer County stand at the head, their yield being estimated at about $1,525,000. A gradual resumption of hydraulic mining goes on under the Caminetti law. Every year a number of old hydraulic mines resume operations, but their production is much restricted by the necessity of storing the débris, which renders it impossible to wash as large a quantity of gravel as they could otherwise do.

Lode mining was generally active in California in 1897. In the south, in Kern County in and around Havilah, Kernville, and Kelseyville, many fine prospects are reported. In Fresno and Madera counties considerable exploration work was done and good results were attained in Grub Gulch, near Oakville, in the vicinity of the old Josephine mines. In Tuolumne County many old mines were reopened, and a large number of prospecting shafts were sunk along the line of the Mother Lode. The same activity was noticeable northward toward Angel's Camp. In Nevada

County the old Allison Ranch mine was reopened, and all the more important mines in the vicinity of Nevada City were in active operation.

Among the permanent improvements of the year in connection with the mining industry was the construction of an electric power plant on the Mokelumne River to develop power for Angel's Camp, 18 miles distant, and the construction of other electrical power plants of similar character at several places in the State. The completion of the Sierra Railroad to Jamestown reduces the expense of mining in that vicinity.

Colorado.—The especial feature of the year in mining in this State was the great increase in the production of gold, which amounted to $19,579,637, against $14,867,971 in 1896, according to the State Commissioner of Mines, H. A. Lee. Toward the end of the year a new gold district was developed in the southwestern corner of Boulder County, and a town called Eldora was established there. The ore is of the telluride character, and some very rich specimens have been obtained.

Clear Creek County.—The production of gold in this county in 1897 is estimated at $782,649, and of silver at 1,442,583 oz., in each case an increase over 1896. The principal part of the gold production is derived from the Empire, Dumont, Yankee Hill, and Freeland districts, in the lower part of the county, where several new discoveries were made. The silver is obtained chiefly from Silver Plume, Georgetown, Lamartine, and Idaho Springs. There are in these districts about 300 mines in operation, most of them small undertakings, and in the case of the silver mines, most of them are worked by the tribute system. The gold ore is milled and amalgamated, the stamp-mills having an aggregate capacity of 350 tons per diem. In general they follow the Gilpin County practice. The silver ores are shipped to the smelters at Denver, either crude or after a previous concentration. The dressing works of the county have a combined capacity of about 750 tons per diem. The use of electrical power in mining attracted considerable attention in 1897 and several companies were organized for the generation of electricity in Clear Creek canyon, to supply the mines and mills of Clear Creek and Gilpin counties.

El Paso County (Cripple Creek).—The production of gold at Cripple Creek during the seven years of its existence as a producer is given as follows: 1891, $2,300; 1892, $585,000; 1893, $2,010,000; 1894, $3,250,000; 1895, $6,970,000; 1896, $9,100,000; 1897, $10,131,855.

The production of the principal mines of the district in 1897 was approximately as follows: Portland, 22,000 tons; Independence, 14,500; Victor, 25,000; Elkton, 8,731; Gold Coin, 18,194; Strong, 16,000; Lillie, 6,000; Orizaba, 1,391; Half Moon, 2,355; Vindicator, 8,786; Legal Tender, 12,000; Isabella, 16,000; Doctor, 7,748; Garfield-Grouse, 800; Anaconda, 8,000; Pharmacist, 3,371; Chicago-Cripple Creek, 1,000; Favorite, 1,213; Granite, 2,500; Dead Pine, 2,500; Gold Dollar, 1,100; Mabel M., 1,600; Prince Albert, 3,500; Orphan Belle, 5,000; Hull City Placer, 2,500; El Paso-Gold King, 5,000; Ida May, 1,200; Ingham, 2,500; Moon-Anchor, 3,400; and Anchoria-Leland, 7,200—total, 211,089 tons.

These mines employ an average of 2,500 men, paying about $2,250,000 in wages per annum. The remainder of the output credited to the district is derived from small mines which are worked chiefly by the leasing system. The dividends paid by public companies in 1897 amounted to $1,147,407, but no account is taken in this statement of the profits earned by private concerns, among which is the largest producer of this district, the Independence mine.

There were in operation in Cripple Creek in 1897 two chlorination works, one cyanide works, and one works (the Colorado Ore Reduction Co.) using both the cyanide and chlorination processes. Besides these the Metallic Extraction Co. (cyanide), the El Paso Reduction Works (chlorination), and the Kilton Ore Reduction Co. (chlorination), all of Florence, and the Colorado-Philadelphia Reduction Works (chlorination) of Colorado City, ran exclusively on Cripple Creek ores. The amount of ore treated and production of these works were as follows: Metallic Extraction Co., 75,584 tons ($1,604,870); Colorado-Philadelphia Reduction Works, 59,051 tons ($1,562,100); Brodie Gold Reduction Co., 20,250 tons ($441,450); Gillett Reduction Co., 13,800 tons ($400,000); El Paso Reduction Co., 9,180 tons ($236,680); Kilton Ore Reduction Co., 3,000 tons ($75,000); Colorado Ore Reduction Co., 6,000 tons ($750,000)—total, 136,865 tons ($5,070,-100). There were four stamp mills in operation, which crushed about 12,000 tons of stuff, averaging probably about $10 per ton. The remainder of the Cripple Creek output, which is assumed to average about $70 per ton, was shipped to smelters, chiefly to those of Denver and Pueblo.

The Cripple Creek mines have now been opened to considerable depth, the Plymouth Rock shaft being down 1,000 ft., and the Independence 900 ft., while one of the Portland mines has been developed to 800 ft., the Anchoria-Leland to between 700 and 800 ft., and the Buena Vista to more than 600 ft. With the increase in depth considerable water is being encountered, as was to be expected, although the upper levels were quite dry. The cost of mining in some of the most profitable undertakings in this district is given on another page.

Toward the end of the year the mill-men and smelters, between whom there had previously been a cutthroat competition, agreed upon the following scale for the treatment of Cripple Creek ore, these rates including all charges for freight, sampling, and treatment: Up to ¾-oz., $8 per ton; from ¾ to 1 oz., $9 per ton; from 1 to 1¼ oz., $10 per ton; from 1¼ to 1½ oz., $11 per ton; from 1½ to 2 oz., $12 per ton; from 2 to 5 oz., $14 per ton; from 5 oz. up, $15 per ton. In ores up to 2-oz. grade the gold is paid for at the rate of $19 per oz.; over 2 oz., $20 per oz.

Gilpin County (Black Hawk).—The gold production of this district in 1897 was $2,086,471. At the end of the year there were 620 stamps in operation at Black Hawk, of which 130 were rapid-drop. The daily product of the mines was about 1,100 tons.

There were no new discoveries of importance in this district in 1897, the increased output being due to the more energetic working of the old mines. The conditions of mining in Gilpin County are somewhat different from those in other districts in Colorado; for one thing wages are lower, the rate paid in the vicinity of Nevadaville being $1.50 to $2.75 per 10 hours, against $3 elsewhere in the State. The operation of mines by the tribute system is, however, extensively practiced. Developments in the milling practice of Gilpin County are described in a special article which is appended.

Lake County (Leadville).—Every year now sees a diminution in the production of Leadville, since the new mines which are opened do not make up for the exhaustion of the old ones, and as the district has now been so thoroughly prospected the chances for new discoveries of importance are comparatively small. The tonnage of the district is still large, owing to the considerable amount of low-grade silver-iron-manganese ore which is mined to serve the lead smelters as a flux. There is an extensive output of low-grade silicious silver ore and a good deal of pyritous ore which carries a little copper. The old sections of the district, namely, Fryer, Yankee, Iron, and Rock Hills, are practically abandoned to leasers; so is Carbonate Hill, except the part where the extension of the great ore shoot beyond the Wolftone mine is worked in the Mahala and adjacent properties.

The Down Town area, wherein the extension of the Carbonate Hill ore shoot west of the Carbonate and Glass-Pendery faults was opened, is now practically abandoned also, on account of the great quantity of water, and the withdrawal of Messrs. Smith & Moffat from the attempt to pump it. This, together with the labor difficulties which began in June, 1896, and were not ended until March 9, 1897, has been a serious setback to Leadville, in addition to which came the further fall in the value of silver last summer, making it unprofitable to work several mines which had been up to that time in operation.

Breece Hill, however, continued to be the scene of a good deal of activity. The great ore bodies of the Little Jonnie and other mines of the Ibex Mining Co. were opened extensively during the year, shipments of from 200 to 300 tons per day of oxidized and sulphide ore, most of it gold bearing, being made steadily. Most of the gold production of Lake County is to be credited to this mine. At the end of the year the Yak tunnel, at that time 17,000 ft. long from the portal in California Gulch, was just entering the Breece Hill region. Important develments are expected in 1898 from this tunnel.

The gold production of Leadville in 1897 was $2,063,858; silver, 5,451,317 oz.; lead, 23,700,908 lb.; copper, 3,146,802 lb.

Pitkin County (Aspen).—The production in 1897 was: Gold, $164,430; silver, 4,599,946 oz.; lead, 4,456,478 lb.; copper, 8,360 lb.

San Miguel County.—The most important gold producers of this county are the Smuggler-Union, Tom Boy, Nellie, Japan group, Carribeau, Suffolk-Globe, Terrible, and Butterfly. Most of these mines are provided with mills, some of them amalgamating mills and some simple dressing works. The Smuggler-Union, which is at present probably the largest producer, dresses about 200 tons of ore per day. This mine is opened on a vein which is remarkable for the extent and continuity of its ore shoot. The Nellie mine, two miles from Telluride, became a producer in February, when its new 40-stamp mill, which is able to crush 80 tons of ore per day, was put in operation. A new mill was built for the Japan mines, and during the latter part of the year these were large producers. The total output of this county in 1897 was $1,468,479 gold and 869,079 oz. silver. The gold output was considerably less than was expected, owing to the falling off in the production of the Tom Boy mines during the latter half of the year.

Summit County.—The gold production of this county in 1897 was about $273,650, of which all but a small part was from lodes; silver, 514,107 oz. It is expected, however, that there will be in 1898 an increase in the production of alluvial gold, since the North American Gold Dredging Co. is preparing to put in operation on the Swan and Blue rivers a Postlewhaite dredge capable of handling 10,000 cu. yards of gravel per 24 hours. The gravel which is to be recovered by this method is said to contain from 25 to 75c. per cu. yard. This will be the first dredge in Colorado.

Several new mills were erected in the vicinity of Breckenridge in 1897, viz., at the Carrie mines a 10-stamp Pelatan-Clerici plant, at the Hamilton a 10-stamp mill, at the Golden Edge a 15-stamp mill, and at the Johannesburg a 5-stamp mill. The Jack mill was remodeled for the application of the Pelatan-Clerici process.

Idaho.—The production of gold in Idaho in 1897 was $2,000,000, against $2,155,300 in 1896. The production of silver was 6,000,000 oz., chiefly from the Cœur d'Alêne, developments in which are described under the caption "Lead" elsewhere in this volume. The output of gold was made chiefly in the old districts, namely, the Boisé Basin, and at De Lamar, in Owyhee County. There was a considerable production of placer gold on the Snake River, as in previous years. In the vicinity of Elk City, Idaho County, there were five large hydraulic plants in operation, while more or less work was done on Newsome Creek. Considerable gold was also produced by the placers in the vicinity of Dixie, Florence, and Warren, the steam-shovel system being employed at the last place by the Warren Placer Mining Co. There was a small production of alluvial gold from the bars of the Salmon River. The total production of placer gold in Idaho in 1897 was about $100,000.

Montana.—The silver production of this State is derived chiefly from the copper-silver ores of Butte, and to some extent from the silver-lead ores of Castle, Barker, and Neihart. The developments in these districts are described under the caption of "Copper" and "Lead," respectively, elsewhere in this volume. At the present time there is comparatively little silver produced in Montana by the operation of silver mines proper, such as the Alice, Lexington, Bluebird, Granite Mountain, and Bi-Metallic mines, which yielded their silver by amalgamation and were formerly large producers.

Of the gold mines proper the most important in Montana in 1897, as for many years previous, was the Drum Lummon of the Montana Mining Co., Ltd., at Marysville. After a period of small production, during which it was thought this mine was nearly exhausted, several new ore bodies were discovered in 1897. During the year a cyanide works of 400 tons per day capacity was erected for the treatment of the accumulation of tailings from the stamp mills. It was operated, with good success up to the beginning of winter. Another important producer in the Marysville district was the Bald Butte mine, which paid $77,500 in dividends during the year. Placer mining was carried on in several districts in the vicinity of Bannack and Helena. River dredging for gold was introduced in Grasshopper and Alder Gulches, where there were four dredges in operation.

Nevada.—The gold production of this State in 1897 was made chiefly by the De Lamar mine in Lincoln County. The mine, which is one of the most profitable in the United States at the present time, is said to have yielded $2,147,900 in 1897, of which 80% was gold and the remainder silver. The mine has been opened to a depth of 1,300 ft. and at the end of the year was said to be producing 9,000 tons of ore per month. The ore is treated by the cyanide process, the mill reducing from 350 to 400 tons per 24 hours.

Outside of De Lamar, which was a district comparatively unknown in 1894, there was very little activity in mining in Nevada in 1897. The Comstock showed no new developments of interest. The treatment by the cyanide process of some of the accumulations of old mill tailings was, however, undertaken. At Lyon the Boston-Nevada Mining Co. put in operation a 40-ton smelting furnace to reduce the copper-bearing ore which it has opened at that place. There was considerable prospecting for gold ore in many parts of the State and some promising discoveries were made, so that there is ground for the opinion that Nevada will before long become again an important mining State through its gold resources.

Oregon.—The gold production of this State is derived chiefly from Baker County, where the ores are treated by stamping, amalgamation, and concentration, or by stamping and concentration without amalgamation. The Eureka & Excelsior mines of Bourne employ the latter process. Their ore consists of pyrite and arsenopyrite, carrying the gold in a very finely disseminated condition. The ore is crushed through a 30-mesh screen and concentrated on Frue vanners. At the North Pole mill of the Eastern Oregon Mining Co. the same kind of ore is treated successfully by the cyanide process after a preliminary roasting in a Brückner furnace.

South Dakota.—The increase in the gold production of the Black Hills was due especially to the extension of operations by the Homestake Mining Co., which is now a larger producer of gold than ever. The Homestake vein at the 600-ft. level is said to be 525 ft. wide, and the amount of ore in sight is very large. The Highland mill is being increased from 140 to 200 stamps. There was also an increase in the output of ore treated by the chlorination and cyanide works and the smelting works of the Deadwood & Delaware Smelting Co. The ore supply was sufficient to enable the company last mentioned to increase its rates January 1, 1898. Under the new schedule ores assaying less than $20 per ton are charged $9 per ton, while $10 is charged for ores of higher grade. These rates include freight to the works. About 200 tons of dry ores are treated per diem at this smeltery.* The construction of a new matte smelting works at Edgemont, to treat 200 tons of ore per diem, was undertaken by the Edgemont & Union Hill Smelting Co., which also began the erection of a 200-stamp mill at Galena, four miles east of Deadwood. An installation of the Pelatan-Clerici process was made in the Poorman mill by the South Central & Christiania Syndicate, Ltd.

Southern States.—There were no new developments of importance in gold mining in these States in 1897. Some prospecting was done in the Dahlonega district and Cherokee County, Georgia, and the Creighton and Walker mines, and the dredge boats on the Chestatee River continued to be producers. In Alabama the Idaho mine in Clay County, and the Pinetucky in Randolph became producers.

Utah.—The production of gold in Utah in 1897 was $1,845,938, against $1,899,900 in 1896. The falling off was due chiefly to the closing down of silver

---

* These works were destroyed by fire March 10, 1898.

mines, the ore of which contained more or less gold. The production of silver fell off from 8,842,810 to 6,689,754 oz. The increase in the production of gold in the Mercur district was less than was expected, chiefly because of delay in putting in operation the new mills which were begun early in the year.

The mining industry of Utah suffered in 1897 not only from the fall in silver, but also through an increase in charges by both the railways and the smelters the rate to Denver and Pueblo having been raised from $7 to $9.50 per ton. The price of dynamite was raised also. These unfavorable changes were felt especially by the mines of Park City and Tintic, where the chief value of the ore is in silver, the tenor of lead and gold being comparatively low. As a result of these conditions the Ontario and Daly mines were closed down August 1. According to the official reports of these companies the cost of production in 1896 was 53.96c. per oz. for the Ontario and 62.5c. for the Daly. It was therefore useless to continue production with silver at 55c. per oz., and there is no prospect that these mines will be reopened while silver continues so low as it is at present. The total production of ore in Utah in 1897 was 505,900 tons, a decrease of 31,000 tons compared with 1896. The Tintic district produced 203,500, Mercur 146,000, Park City 79,415, Bingham 55,060, and Horn Silver 13,000.

Bingham.—Owing to the high price ruling for lead during part of the year there was much prosperity in this district, which produces silver-lead ore of such grade that the increase in the value of lead more than offset the decrease in the value of silver. The largest producer was the Old Jordan & Galena, which increased its output from 9,000 tons in 1896 to 39,000 in 1897. An important discovery was made in the Highland Boy mine, where copper pyrites of profitable grade were uncovered. It is thought that similar deposits of ore exist in the district. There were two cyanide mills in operation on oxidized surface gold ores and there will probably be two more in 1898.

Mercur.—The gold production of this district in 1897 was 37,739 oz., against 36,798 oz. in 1896 and 21,430 oz. in 1895. It was expected that there would be a larger increase in 1897, but several of the new mills were not completed in time to add to the output. There are now five cyanide works in operation in the Mercur district, with a nominal capacity of 760 tons per diem. The Sunshine mill is idle. There are three large mills in course of construction, namely, La Cigale, the Chloride Point, and the De Lamar, the last of which is planned to treat 500 tons of ore per diem. It is expected that these mills will be in operation early in 1898. All of the mills of the Mercur district employ cyanide lixiviation. The older works are more or less crude in their design, but many novelties are being introduced in the new ones. La Cigale mill, for instance, is to have self-dumping rectangular tanks, while the De Lamar mill (Golden Gate) is being built entirely of steel and is to be driven by power transmitted electrically from Provo Canyon, a distance of 55 miles, the power company agreeing to supply it at $60 per h. p. per year. The new Northern Light mill is working on an ore that carries more silver than gold and its successful treatment has yet to be demonstrated. The Mercur district as well as Cripple Creek, Colo., is now confronted with the problem of roasting the ore before leaching, and at the new De Lamar works everything will be roasted. The capacity of the Mercur mill was doubled in 1897, and it is now treating about 300 tons per diem. The two mills of the Geyser-Marion Co. treat about 150 tons per diem. It is said that mills will be built for the Daisy and Omaha mines in 1898.

Park City.—The production of this district in 1897 showed a large falling off owing to the closing of the Ontario and Daly mines. The Silver King, however, continued in operation and paid large dividends. The Anchor mine was in operation, but the Daly-West was idle during the latter part of the year. The production of the Ontario mine in 1897 was 23,044 tons of mill ore yielding 835,190 oz. of silver and 418 oz. gold; and 588 tons of smelting ore containing 56,217 oz. of silver and 52 oz. of gold.

Tintic.—Last year was discouraging for this district, owing to the low price for silver and the increase in freight and smelting charges. The Bullion-Beck & Champion closed its mill on May 15 and soon afterward the Mammoth mill was shut down. The Bullion-Beck & Champion Co., after a cessation of three months, resumed shipments of high-grade ore on December 1, a large body having been uncovered at the lowest level 1,350 ft. After March the Centennial-Eureka Co. did nothing but development work. The Eureka Hill and Gemini companies kept at work throughout the year.

FOREIGN COUNTRIES.

Australia.—The seven colonies of Australia made a large increase in gold production in 1897, for although New South Wales, New Zealand, South Australia, and Tasmania each showed a falling off, the loss was small and was a good deal more than offset by the gain in the other colonies. The statistics are summarized in the following table:

Countries.	1896.			1897.		
	Crude Oz.	Fine Oz.	Value.	Crude Oz.	Fine Oz.	Value.
New South Wales	296,072	259,063	$5,354,832	292,217	252,752	$5,224,382
New Zealand	263,722	237,350	4,906,025	251,644	230,782	4,770,256
Queensland	638,212	526,525	10,883,272	796,885	658,580	14,170,986
South Australia	29,004	27,884	506,027	*Nil.*	....	....
Tasmania	62,586	55,258	1,142,295	45,700	40,442	835,986
Victoria	805,089	756,782	15,642,684	822,032	782,549	16,175,287
Western Australia	281,265	251,646	5,201,518	674,993	604,121	12,487,181
Totals	2,375,950	2,114,008	$43,696,653	2,884,071	2,569,226	$53,663,960

New South Wales.—The production of gold in this colony in the first quarter of 1897 was 63,633 crude oz., in the second 63,616, in the third 94,991, in the fourth 69,977. The total for the year was 292,217, valued at £1,088,413, which was an increase of £15,053 over the previous year, although in quantity there was a decrease of 3,854 oz. At the end of the third quarter of the year it was expected that there would be an important increase in the total for the year, but owing to the extremely dry weather and the consequent inability of many of the mills to work at their maximum capacity, there was a large falling off in the last quarter.

Steps were taken during the year to introduce on the Macquarie River steam dredges of the type used in New Zealand. The bed of the river has been leased in two-mile stretches, comprising about 900 acres, and it is intended to set nine dredges at work. The richness of the surrounding country leads to the belief that there is a good deal of gold in the bed of this river.

The production of silver in New South Wales, as in previous years, was derived chiefly from the mines of Broken Hill. The production of these mines in 1897 was as follows: Bullion, £615,875; crude ore, £319,185; concentrates, £678,589; slimes, £20,288; zinc concentrates, £16,301; copper ore, £820; copper matte, £110,098—total, £1,755,155. The total number of men employed in the mines was 5,563, against 5,359 in 1896 and 4,300 in 1895.

New Zealand.—The gold production of this colony in 1897 was 251,644 crude oz. (230,782 fine oz.), valued at $4,770,256, which was a decrease as compared with 1896. Of the production in 1897 £294,298 were credited to the Upper Thames district, where there were ten mines in operation; £29,332 to the Lower Thames, where there was a large number of small mines in operation; £63,965 to Coromandel; £6,973 to Kuaotunu; and £28 to Great Barrier. The largest producer of the colony was the Waihi Gold Mining Co., which is credited with an output of 39,564 tons, yielding £138,655. The exports of silver from New Zealand in 1897 amounted to 181,160 oz., an increase of 86,853 oz. over 1896.

An important development in the gold-mining industry of this colony has been the success in dredging for alluvial gold in the beds of the rivers of the South Island, especially on the Clutha in Otago. The Clutha is the largest river in New Zealand. On August 19 there were 57 dredges at work in Otago, 13 building, and 75 claims taken up with the view of placing dredges upon them. There were in addition a few dredges on the west coast. The total production of dredged gold in 1896 by 15 companies was 12,783 oz., valued at £49,536. The cost of production was £40,327. Of the 15 companies there were eight which worked at a profit. The losses of the remaining seven companies were in no case large. The total amount of gold recovered by dredging in New Zealand up to the end of 1896 is 28,916 oz., valued at £108,243. Statistics of production of dredged gold in New Zealand in 1897 are not yet available but there was undoubtedly an increase from this source.

The cyanide process of gold extraction has found greater application in New Zealand than anywhere else in the world with the exception of the Transvaal and the United States. In the Hauraki district in 1896, 64% of the total production of gold was in the form of cyanide bullion. In view of the importance of the process the Mines Department of the colony determined to acquire the rights to it. Accordingly an agreement was entered into last year between the Minister of Mines and the Cassel Gold Extracting Co., Ltd., by which the company agreed to sell the patent rights of the cyanide process in New Zealand to the government for £15,000, the company reserving for the Waihi Gold Mining Co., Ltd., the Waitekauri Gold Mining Co., Ltd., the Union Waihi Gold Mining Co., Ltd., and the New Zealand Crown Mines Co., Ltd., the patent rights which had been previously guaranteed. It is the intention of the government to allow the use of the cyanide process on the gold fields, making a small charge for the privilege, according to the value of the ore treated. When the expenses incurred by the government have been recouped the process will be free to all who are engaged in gold mining in the colony.

Henry A. Gordon, president of the New Zealand Institute of Mining Engineers, reviewed the progress of mining in New Zealand at the first meeting of the Institute at Auckland, July 12, 1897. After describing the early crude methods of exploiting the alluvial deposits, he said that in recent years low-lying valleys which previously had not been prospected on account of the quantity of water to be contended against and the low grade of the gravel, have been successfully worked by means of hydraulic elevators and dredges. The latter are now applied successfully to work ground where the depth of the auriferous material does not exceed 40 ft., while hydraulic elevators are employed successfully to lift material to a height of 20 ft. for every 100 ft. head of water used on the elevator. It is only about two years since elevators have been constructed for lifting the tailings from the sluice-boxes of dredges. These now convey and deposit the tailings a considerable distance astern of the barges, and in some instances have been the means of making dredging profitable. Previously the stones were deposited directly under the stern of the barge and sometimes choked it to such an extent that it could not be moved.

Queensland.—The production of gold in this colony in 1897 was 796,885 oz. against 638,212 in 1896. This great increase in production is especially noteworthy in view of the scarcity of water which was experienced in the early part of the year. The greatest increase in any single district was made by Charter Towers, which remains the most important in the colony. Its output in 1897 was 356,658 oz. against 234,139 oz. in 1896. Of the output in 1897, cyanide works produced 107,415 oz. and chlorination works 8,131. There are 57 cyanide works in operation in this district and several in course of construction. The dividends paid by Charter Towers mines in 1897 amounted to £340,243 and the calls to £93,000. The dividends exceeded by £88,000 the payments in 1896. The chief dividend-paying mines were the Day Dawn (£87,500), Brilliant (£80,-166), Brilliant & St. George (£63,000), Hapuin (£24,600), Victoria (£21,600), and Victory (£15,000). The ore milled yielded an average of 1.2 oz. gold per ton. All told, there were 18 dividend-payers in the district in 1897.

The production of the Gympie district in 1897 amounted to 63,147 tons, yielding 94,584 oz. (an average of 1 oz. 10 dwt. 7 gr. per ton) against 73,729 oz. in the previous year. The dividends declared amounted to £168,299 (an increase of £54,468 over 1896) and the calls to £84,186. The cyanide process is being introduced in this district. Following Gympie in importance is Croydon, which produced 75,700 oz. from 56,700 tons of ore, a loss of 10,000 oz. from 1896. Dividends amounting to £50,000 were paid. The value of the lodes in this district does not seem to hold out beyond a depth of 200 ft.

On the Mount Morgan gold field in 1897, 187,700 oz. gold were obtained from 129,883 tons of ore. The output of the Mount Morgan mine was 168,643 oz. from 127,108 tons of ore. The dividends came to £100,000. The production of this mine from the formation of the company in July, 1886, to May 31, 1897, was 696,888 tons of 2,240 lb. of ore, which yielded 1,631,981 oz. of gold, an average of 2.34 oz. per ton. The proceeds were £6,712,187. The cost of production, not including dividend duty and royalty, was £2,124,860; including dividend duty and royalty it was £2,247,669. The company paid a dividend in the first six months of its organization, and has not failed to make a payment in each succeeding half-year, the total on May 31, 1897, amounting to £4,400,000.

The dividends amount to 65.6% of the gross production of the mine, but it is to be remembered that the Mount Morgan ore is comparatively rich. For two years in the early history of the mine it averaged over 5 oz., the maximum for a single half-year having been 5.8 oz. Since 1892, however, the grade of the ore worked has been less than 2 oz.

An interesting feature of the year in Queensland was the development of the new Clermont gold field, which produced 22,005 oz., all from alluvial deposits.

Queensland, beside being the foremost gold-producing colony of Australia, is considered by many to have the greatest resources, notwithstanding the extraordinary development in Western Australia. It probably possesses more gold fields than any other colony, but many of these are situated in remote districts, far from railways, and in drought-stricken areas, which makes their development difficult. The Etheredge, Ravenswood, and Gladstone are considered especially promising.

Tasmania.—In the first half of 1897 the gold production of Tasmania amounted to 26,749 oz., which was a large falling off from 1896, though it is fully up to the average of previous years. The output in the second half of the year was 18,951 oz. Practically the entire output of gold in Tasmania is derived from quartz mines.

Victoria.—The production of gold in this colony in 1897 amounted to 822,632 oz. against 805,089 oz. in 1896. The figures for 1897 are based on the receipts at the mint and banks. About one-quarter of the gold production of Victoria in 1897 was derived from the Bendigo field, where there were 26 mines which paid dividends, the most important of these being the Great Southern and the Victoria Quartz. These 26 mines produced 217,364 tons of ore, which yielded 99,433 oz. gold; their dividends amounted to £168,647. The total production of Bendigo was 203,208 oz., which was an increase over 1896. As heretofore practically all of this comes from the New Chum, Garden Gully, and Hustler's Reefs. The output of the Ballarat district was 75,816 oz. against 76,090 in 1896. There were no developments of importance in the district, although a good deal of prospecting work was done. Inclusive of the sums paid as royalties to proprietary companies and individuals the total amount disbursed as dividends was £39,000, only three companies being on the list. Nearly £80,000 was called up by various companies on capital account.

Western Australia.—Of the seven colonies, Western Australia showed the greatest increase in gold production in 1897. Indeed, the development of the gold fields of this colony was marvelous. The production in 1896 was 281,265 crude oz., valued at £1,061,800, which was an increase of about 50,000 crude oz. over 1895. In 1897 the production was 674,993 crude oz. (equal to 604,121 fine oz.), valued at £2,378,020 ($12,487,181). The greatest increase was shown in the Hannans district, which is now the chief gold producer of the colony. The output of this district rose from 19,606 crude oz. in January to 38,303 crude oz. in October. The production of Coolgardie in January was 23,506 crude oz., but for the remainder of the year the average was a little under 10,000 crude oz. North Coolgardie and Murchison produced somewhat smaller amounts than Coolgardie, while small outputs were also made in the Yilgarn and Northeast Coolgardie districts. A noteworthy feature in the Western Australian statistics is the erratic character of the production in each of the districts. Thus, the production of the Hannans decreased from 19,606 oz. in January to 9,756 oz. in February, rising to 21,444 oz. in March, and falling to 14,222 oz. in April. The following yields are reported for mines in the Kalgoorlie district: Great Boulder, 28,457 tons, 83,292 oz.; Lake View, 28,904 tons, 46,932 oz.; Ivanhoe, 12,757 tons, 25,325 oz.; Brown Hill, 3,793 tons, 21,632 oz.; Boulder Perseverance, 11,526 tons, 22,620 oz.; Lady Shenton, 4,134 tons, 15,151 oz.; Associated, 4,885 tons, 27,558 oz.; Burbanks, 5,302 tons, 12,689 oz.; Boulder North, 5,173 tons, 10,719 oz. The list of West Australian dividend-paying mines during the past year includes 16 companies. The Great Boulder paid £128,000 and the Lake View Consols £125,000.

The geology and mining practice of the Coolgardie gold fields were described in an elaborate paper* by Baron Sloet Van Oldruitenborgh. According to him the most advanced among the mining companies have opened their lodes along the strike for a maximum of 2,000 ft. and to a depth of 300 ft. Comparatively little timber is required. Rock drills are only just beginning to be introduced. Labor is abundant. The practice in milling is crude. The largest of the mills comprises only 30 stamps, which crush from 1.5 to 2.25 tons per stamp per day. Not more than 65% of the gold is recovered, and this percentage is reached only with the most perfectly oxidized ores. With many ores, and particularly with those extracted from dike lodes, the average yield may be as low as 50%. Berdan pans have been erected behind the batteries by a few companies, by which means from 10 to 20% additional is recovered, but these pans are ineffective for the treatment of arsenical and telluride ores. Most of the mining companies have also placed blankets behind their mills, by which they succeed in saving a small percentage of the coarsest tellurides and sulphides as concentrates, assaying from 2 to 40 oz. gold per ton, which are shipped abroad to smelters.

Working expenses in the district are very high under present conditions. At the best-equipped mines the cost of extraction ranges from $5 to $7 per ton of ore, but these figures are largely exceeded by the less advanced mines. The value of the crude gold from the West Australian mills varies within broad limits; that which is produced from quartz veins, and is as a rule more or less silver bearing, is worth from £3 8s. to £4 2s. per oz., while the gold obtained from dike lodes brings from £3 18s. to £4 4s. per oz. The general average is about £3 15s. per oz. Consequently the West Australian gold may be regarded as exceptionally pure.

Bolivia.—The silver production of Bolivia is derived almost entirely from the mines of Huanchaca, Oruro, Colquechaca, Potosi, from the Guadaloupe country, and from five mining districts leased to speculators. The most important producer is the French company which exploits the mines of Huanchaca. Statistics of the production of Bolivia are, however, very incomplete. Data relating to certain of the important companies are given in the subjoined table. There are no complete data at hand for Bolivia later than 1894. In view, however, of the decreasing output of the largest producer it seems rational to estimate a decreasing production of silver in Bolivia, although the director of the United States Mint keeps practically the same figures as for 1894.

The figures for 1895–97 in the following table are estimated.

---

* *Technical Observations Upon the Coolgardie Gold Fields.*

Companies.	1894.	1895.	1896.	1897.
	Ounces.	Ounces.	Ounces.	Ounces.
Huanchaca Co	8,468,727	4,589,838	2,466.158	....
Colquechaca Co	1,333,318	....	....	....
Oruro Mining Co	1,518,658	....	....	....
Guadaloupe Co	652,010	....	....	....
Royal silver mines of Potosi	365,549	....	....	601,715
Five districts (licitados)	2,181,034	....	....	....
Totals	14,519,296	12,500,000	11,500,000	10,500,000

In 1897 the Royal Silver Mines of Potosi treated by amalgamation 4,860 tons of ore averaging 363 oz. silver per ton, and exported 164 tons of ore averaging 720 oz. per ton. The ore amalgamated yielded 505,468 oz. and the ore exported 96,247 oz., a total of 601,715 oz. The average loss in roasting was 7.4% and in amalgamation (tina process) 7.2%, a total loss in treatment of 14.6%. The loss of quicksilver amounted to 1 oz. per mark (7.394 oz.) of silver. The export ore contained in addition to the silver from 10 to 12% of copper.

According to a memorandum recently presently to the shareholders of the Compagnie des Mines de Huanchaca the losses in 1896 amounted to $833,000. The chief cause of the decadency in these mines rests in the impossibility of working at a greater depth than 356 m., at which depth an enormous flow of water is encountered; so that the company was only able to obtain in 1896 ore assaying 2.2 kg. silver per ton, while in 1895 the average was 3.5, in 1894, 6.75, in 1893, 7.6, in 1892, 6.7, and in 1891, 6.25.

The production of gold in Bolivia is so far insignificant, although its gold resources are thought to be considerable. The small production which is reported comes entirely from alluvial deposits, which are numerous. The placers at Tipuani, north of La Paz, have been more or less productive and are thought to offer great opportunities. Gold-bearing lodes exist in several parts of the country. There is a reef of considerable extent in the Province of Chayanta, and another at San Simon, on the banks of the river Itenes.

Brazil.—There are no official statistics of the gold production in this country. The principal mines are the Ouro Preto and the Morro Velho, the latter operated by the St. John del Rey Mining Co., Ltd. These mines are situated in the Province of Minas Geraes. Gold is also produced in the Provinces of Ceara, Bahia, Goyaz, and Matto Grosso. The production of the mines of Minas Geraes in 1896 was 1,461 kg. fine. The production in other parts of Brazil was 344 kg. The two large producers of Minas Geraes made an output of 1853 kg. in 1897. Assuming this to be the total production of that province, and estimating 347 kg. as the production of the other provinces, the total output of Brazil in 1897 was 2,200 kg. against 1,805 in 1896. It is not unlikely that these statistics underestimate the actual production of gold in Brazil. The ore treated by the St. John del Rey Mining Co. averages about 0.6 oz. per ton.

Canada.—The production of gold in the Dominion of Canada in 1897 was $6,190,000 against $2,810,206 in 1896. The production of silver increased from 3,205,343 to 5,558,446 oz. The greater part of the production of gold and nearly the whole of the production of silver was derived from British Columbia. New discoveries of gold were made in the Northwest Territory (Klondike) and in several districts (Rainy Lake, etc.) in Ontario, north of Minnesota. The latter did not add materially to the gold production of the Dominion in 1897. The production of Nova Scotia was about the same as in the previous year.

British Columbia.—The production of gold increased from $1,788,206 to $2,636,340. The gold production of this province is obtained partly from lodes and partly from alluvial deposits. The Cariboo district is a type of the placer diggings. It lies in the northern portion of the province, immediately north of the 52d parallel. The mines here have been worked for many years, and the yield of gold has been large. The great drawback is the difficulty and expense of taking in material and supplies. There is much good placer ground elsewhere, and an abundance of water, so that new claims are now being steadily developed.

At present there are comparatively few gold quartz mines in active operation, not so much from the scarcity of the ledges as from their isolation. A steady advance in this direction will follow more thorough prospecting and the opening up of traffic communications. Enough is now known of several districts, such as the Camp McKinney, Fort Steele, and others, to encourage capital to invest in them.

The silver production of British Columbia increased from 3,135,343 oz. in 1896 to 5,472,971 in 1897.

Yukon.—The feature of most interest in gold mining in Canada in 1897 was the discovery of rich placers in the Northwest Territory in the valley of the Yukon River, just over the American line. The most important finds were made along the Klondike River, a tributary of the Yukon, and near its confluence with the Yukon the town of Dawson sprang up. The first receipts of gold in the United States from the Klondike happened in the early part of July and the tales which were related by the returning miners were so marvelous that a rush to Alaska was precipitated immediately. Owing, however, to the lateness of the season the number of persons who were able to make their way thither before navigation closed was comparatively small.

The most authoritative and intelligent account of the alluvial deposits of the Klondike was contributed by H. Bratnober to the *Engineering and Mining Journal,* in October, 1897, immediately after his return from the new fields. He reported that the country rock is mica schist streaked with quartz, which all carries a little gold. This quartz is, however, of very low grade. The schist formation appears to be from 10 to 15 miles in width. On each side of it there is diorite which is intersected by veins of quartz of no value.

The entire country is covered with moss and frozen to bed rock. In sinking to bed rock the shafts often pass through strata of blue ice from 2 to 3 ft. thick, sometimes immediately above the bed rock and sometimes near the surface. It is difficult to work in this ground in the summer, even with close timbering. The method of exploitation is practically the same as that which is employed in Siberia.

Most of the ground is worked on what is called a "lay;" that is, the owner of a claim 500 ft. long gives a party of two or three a lease of a piece of ground to drift out, the lessees receiving one-half the gold won. On the richer claims, however, it is often drifted out for 40% of the yield. The dirt which is dug in the winter is accumulated in heaps for washing in May, June, and July. There are very few diggings where pay dirt can be shoveled directly into sluices.

Some of the claims are very rich and the dirt will average $1 or $1.50 per pan. These claims occur where the bed rock is shaly, and then the pay streak is often nearly 4 ft. in depth. Where there are no quartz stringers in the schists it appears rather decomposed, and such claims are not of much value, paying no more than wages. The ground is very spotted. There have been places where $40 to $50 a pan has been obtained, but these are phenomenal cases. Prospecting in the Yukon is exceedingly difficult on account of the moss, which covers the entire country, and the swamps, which make it hard to transport supplies. Horses cannot be used and the prospector can go only so far as he is able personally to carry his provisions. There is very little feed or grass for animals of any kind. Hydraulic mining is impossible on account of the frozen nature of the country. Quartz mining will be unprofitable unless the veins are very rich. Labor will always be high and another drawback exists in the lack of running water during the winter, the creeks freezing solidly.

In the exploitation of the alluvial deposits of the Klondike a shaft is sunk by heating bowlders and dropping them into the hole, where they melt the ice and frozen ground. When cool they are hoisted out and reheated and the thawed ground is dug out; the operation is then repeated until bed rock is reached, when a drift is driven between two shafts and then a breast of 30 or 40 ft. width is carried forward by building a fire against the face of the gravel, dry wood being placed at the bottom and green wood on top of that, while poles are set up so as to form a shield over the fire to divert the gravel which falls from the roof as that thaws by the ascending heat from the burning wood. One burning will thaw about 6 or 8 in. into the breast. The wood is fired in the evening when the men quit work, and in the morning what ground has thawed is removed; or else there are two unconnected shafts which are worked in alternately. The waste or barren gravel is thrown back to support the roof as the face advances, while the rich gravel and some of the bed rock is hoisted to the surface, where it again freezes and remains frozen until the summer suns thaw it, when it is washed for the gold it contains. All the gravel mined during the eight months of winter can be washed in two months of summer by the same men. The working out of a length of 30 ft. on a pay channel 50 to 60 ft. in width and 1 ft. in thickness of gravel and the washing of the same is considered a good season's work for two men, and would give an average of 700 to 900 cu. ft. per man per year.

It is undoubtedly true that the Klondike contains very rich gravel, but the best information confirms universal experience in other gold fields, that the amount of very rich gravel is comparatively small. The rich gold-bearing gravel does not cover the whole extent of the valley, but runs in channels, usually from 30 to 50 ft., though sometimes a few hundred feet, in width, and such a channel may extend across a claim or may not according to the character of the bed rock and other determining conditions.

Since wages are $15 a day, wood $20 to $30 a cord delivered, lumber $130 per 1,000 ft., board measure, and everything else in proportion, it is not surprising that men cannot afford to work gravel that will not yield at least 1 oz. (counted as worth $17, though seldom worth so much) of gold per day. Gravel that will run 2 oz. per day per man is good; 3 oz. per day is excellent, and such ground can be rented at a royalty of one-half the gold extracted, the lessee paying all the expenses. Much of the ground is thus worked on shares, the miners paying the claim owner from 30 to 60% of the gold produced.

In his latest letter from Dawson, which is dated December 15, John D. McGillivray, says: "While no doubt the gravel deposits of this country are extensive, they cannot, so far as proven, be said properly to be of high grade. There is nothing remarkable in the pay found in Eldorado, the richest of all the creeks so far discovered. The best pans found there do not compare with many that were found in California and elsewhere. It is true that the pay is more evenly distributed than was usually the case in California and this makes the whole creek rather remarkable for the total amount of gold contained in its deposits. But in all of Eldorado there are not over three, or at most four, miles of rich ground. On Bonanza, the second richest creek, a few claims have proved rich enough to drift. At most not more than 100 claims on Bonanza have been shown to be valuable. These cover a length of a little less than 10 miles of the creek.

"Aside from these claims on Eldorado and Bonanza creeks, there are none in the Klondike district which are claimed to be as good as the average of Bonanza. There are any number of claims that give promise of good mines, particularly on Hunker and two of the branches of Indian River, but their value is at best only prospective. There have been located up to the present time about 3,000 claims, 2,500 of which are 500 ft. long, and the others 100 ft. This means that between 250 and 300 miles in length of creeks have been located. So far as is now known, the only mines of proved value on Eldorado are about 30 of the first 47 mines, which extend up to the forks of Chief and Eldorado. Above that but few good claims have been found. A large part of the mines in Bonanza from No. 43 above to No. 70 below discovery, or 114 in all, have been proved of value."

Immediately after the value of the Klondike placers seemed to be assured the Canadian government published regulations concerning them which aroused a good deal of opposition. The features especially obnoxious were the levying of a tax of 10% on the gross yield of each mine up to $26,000 per year, and 20% of the yield in excess of $26,000; the limiting of creek claims to 100 ft. in length instead of 500 ft. as under the old law; and the reservation of alternate claims by the government and their sale at auction. John D. McGillivray, special correspondent of the New York *Herald*, is authority for the statement (letter dated October 14) that there is not one producing mine in ten on Bonanza, Eldorado, and Hunker Creeks (branches of the Klondike River) which can be worked at a profit after paying the royalty demanded. Owing to the numerous protests against these regulations the Dominion government published amended regulations early in 1898. According to these every miner and every employee of a miner must take out a certificate, the fee for which is $10, and in the case of a company $50 to $100, according to the amount of capital stock. A miner's license confers a right to mine, fish, hunt, and to cut timber necessary for mining. Mining claims are to be 250 ft. wide and discoverers' claims 500 ft. Every alternate 10 claims are to be reserved by the government, which may dispose of them at public auction. Subaqueous mining leases will be issued in five-mile sections, with a fee of $100 per mile per annum and the usual royalty on the output of gold therefrom.

The fee for recording and renewing mining claims is $15. A royalty of 10% on the gold mined is to be collected, but provision is made for the exemption of the annual product of any mining claim up to $2,500.

Provisions are made to prevent speculation in claims by throwing a claim open to entry which has not been worked a certain number of days, unless reasonable cause is shown for failure to work it; and others, providing that a record shall not be issued for more than one claim in the same locality to any miner.

The production of gold in the Canadian Yukon is more or less uncertain. According to the estimates of the Canadian Geological Survey, the yield in 1897 was $2,500,000 against $300,000 in 1896. A well-informed authority in San Francisco reported at the end of 1897 that the amount of gold received at that place from the Klondike had been about $1,500,000.

The Klondike gold is not very pure. Of two lots received at the New York Assay Office, one assayed 0.749 gold and 0.246 silver, which made the value $15.48 per oz., while the other assayed 0.820½ gold and 0.174 silver, making the value $16.95 per oz.

Celebes.—There are two companies working gold mines in these islands, one at Paleleh and the other at Simulata. The ore mined is comparatively rich, that of one company averaging nearly 6 oz. per ton and that of the other 2.5 oz. One of the veins worked by the Netherlands India Mining Co. at Paleleh is 3 ft. wide, the ore assaying 45% silica, 24% iron, 6% alumina, 16% sulphur, 0.5% copper, and 1% lead, with 6 oz. gold and 12 oz. silver per ton. Another vein worked by this company is 1.5 ft. wide, showing the same character of ore. The company made considerable shipments of this ore to England in 1897, pending the erection of a mill.

China.—There are no statistics as to the production of gold in this empire, although it is well-known that a good deal is mined there, and moreover that a good deal of gold stolen in Siberia is sent clandestinely into China. Probably the larger part of the gold of domestic production, as well as that received from Russia, and that taken into China by emigrants returning from California and Australia, of which no account is taken in the statistics of those countries, is exported eventually from China, and the statistics of imports and exports consequently take the place, partially at least, of production statistics. The movement of the treasure to and from China takes place chiefly through the port of Shanghai.* The latest statistics of this port are as follows:

Year.	Gold.			Silver.			Value of Haikwan Tael in U. S. Gold
	Imports.	Exports.	Excess of Exports.	Imports.	Exports.	Excess of Imports.	
	H. Taels.	H. Taels.	H. Taels.	H. Taels.	H. Taels.	H. Taels.	
1891	82,000	3,665,000	3,633,000	4,481,000	5,462,000	(a)981,000	$1.20
1892	345,000	7,632,000	7,287,000	6,585,000	8,432,000	(a)1,847,000	1.07
1893	461,000	7,874,000	7,413,000	15,602,000	4,130,000	11,472,000	0.96
1894	40,000	12,748,000	12,708,000	30,852,000	4,228,000	26,624,000	0.77
1895	216,000	7,066,000	6,850,000	40,550,000	3,947,000	36,603,000	0.80
1896	654,000	8,853,000	8,199,000	12,225,000	5,595,000	6,630,000	0.81

(a) Excess of Exports.

The net export of gold during 1896 is put down as 8,199,000 Haikwan

---

*British Consular Report No. 1951, Annual Series.

taels as against 6,850,000 taels in 1895. The most of this was shipped as gold bars to Germany by the German post office as mail matter.

It has been for a long time known to the Russian engineers that there are many important deposits of gold-bearing sands in the valleys of the tributaries which flow into the Amour River from the Chinese side. These have not been accessible, however, owing to the strict prohibition of mining by the Chinese, although there is no doubt that some of them have been skimmed by Russian prospectors who have found their way across the line. Under the recent treaty by which the Russian government has acquired the right to build the eastern end of its Siberian line through Manchuria, these deposits acquire importance, since they will doubtless before long be opened to exploration. Indeed, within the past year there has been a departure from the ancient policy, and regulations have been promulgated by the Chinese authorities authorizing the search for gold in Chinese territory, prospectors and miners being required to obtain permits from the local authorities, paying an annual tax of 100 taels, and a royalty of two-fifths of the gold obtained.

Some explorations already made by Russian travelers have given a general idea of the extent of the gold-bearing regions. Those best known are naturally the districts adjoining Russian territory. The most important deposits are found along the Ourga, a tributary of the Gana. Some of these appear to be exceedingly rich. Other valuable deposits are found in the Valley of the Joultonga, which flows into the Amour about 450 versts above Blagoviestchenk. This district was invaded by Russian workmen as long ago as 1884, and it required a considerable force of Chinese to drive them out. In 1888, the working of the mines was undertaken by a Chinese society at the head of which was Li Hung Chang. They are called the Mo-Khe mines, but little is known of their present condition. In 1890 nearly 500 miners were attracted by the discovery of gold in the valley of the Fa-Bira, a stream which falls into the Amour a little below Blagoviestchenk. The Russians were driven out by Chinese troops, and a garrison is still maintained to prevent further working of these placers.

On another tributary of the Amour, the Oui-Khe, there are alluvial deposits which have been worked under permits from the Chinese government. In 1894 it is said that 2,000 men were at these placers, and that a return of 1,180 kg. of crude gold was obtained. More recently, Colonel Pontiata, a Russian explorer, reported the existence of rich alluvial deposits on the Morena, not far from Lake Khanka. The Morena is in the extreme eastern portion of Manchuria and is a tributary of the Oussouri.

In the basin of the river Soui-foun, which falls into the bay of Peter the Great, not far from Vladivostok, the existence of gold has been recognized on the banks of at least three streams, the Van-loun-goou-khe, the Ba-dao-khe-tsi, and the Sao-Soui-foun. Placers are also known to exist and have been occasionally worked in the valley of the Toumen-Oula, which forms the boundary between Manchuria and Korea. On a neighboring stream, the Goubon, workings have been carried on with the consent of the governor of the district and doubtless to his profit.

In the districts more remote from the Russian frontier the principal auriferous deposits now known are those of the upper Soungari, where the mines of Tsiapi-goou are said to have been worked 130 years ago. At the present time the exploitation is carried on by a semi-independent Chinese community, reported to be very wealthy.

Gold has also been found on the Vokene-khe, which flows into the Soungari at Sansin, about 450 versts southwest of Khabarovka. In 1889 the governor of Ghirina permitted the working of these deposits, levying a royalty of 10% on the gold obtained. Nearly all the neighboring population flocked to the placers, but as the permission was not confirmed by the authorities at Pekin, troops were sent to drive out the prospectors. An attempt was then made to work the placers on government account, but it lasted only a very short time. In 1895, however, the Russian traveler, Matiounine, reported that a large number of Chinese, probably 5,000, were working the placers without any interference from the local authorities. He reported that at least 982 kg. had been extracted. In 1896 one of the directors of the Chinese company operating the Mo-Khe mines obtained a concession covering all the alluvial deposits in the Province of Ghirina, and endeavored to put a stop to the illicit working. He sent a force of 2,000 men to the district, but the result is not yet known. Other alluvial deposits are reported in the mountain of Tchan-bo-chan and in the peninsula of Liao-doun. Information with regard to the Manchurian placers is not generally very definite, except for the two great centers, Tsai-pi-gou and the Joultouga. In the Joultouga placers, the soil being marshy, the work is carried on most easily in winter when the ground is frozen. As to the nature of the deposits, the only reliable facts known are of the Joultouga placers. The ground worked by the Russian miners, who called themselves the "Free Community of Miners of the Joultouga," from 1883 to 1886, occupied both banks of the stream for a distance of 12 to 15 versts, the width varying from 40 to 200 m. The overburden varies in thickness from 1 to 1.75 m.; below this is a bed of sandy clay from 2 to 7 m. in thickness, under which the pay gravel is found, usually from 1.50 to 2 m. thick. The gold is found chiefly in pockets. There is a tradition that one nugget was found weighing 2,050 g. As the cost of all the necessities of life at these times was very high, it was not found profitable to work gravel yielding less than 21.33 g. per cu. m. The working was generally carried on by parties of nine men each, and it is said that their earnings varied from 640 g. down to 43 g. of gold a day. When the placers were first discovered it was not uncommon to see 615 g. obtained from a single cubic meter of gravel.

Guiana.—The production of gold in the three Guianas was 194,347 oz. in 1897 against 213,412 oz. in 1896. The gold mining industry in these provinces is very ancient, work having been done along the Essequibo by the Dutch before the British occupation of the region. Mining was subsequently abandoned until the discovery of gold at Curatal, when the exploitation was resumed more scientifically and openings were made on the Parani, which soon became known as a rich gold field. Placers are also exploited at Orocte Creek, on the Barama, and on the Potaro, Cuyuni, and Urnan. At the present time there are mills at Arikaka Creek and at Mt. Everare on the Demerara. These places are all situated in British Guiana. The quartz is rich, but the methods of mining and milling are crude. For each placer claim the government levies a tax of 4s. 2d. per month, and for each lode claim a tax of double that amount. A claim is 1,500 × 500 ft. Wood and water are abundant. The production in 1896 was 107,778 oz.; in 1897, 105,505 oz.

All the gold produced in French Guiana is of alluvial origin. It is considered that if better methods were used the output could be increased considerably. Three years ago important deposits were discovered at Carsewene, on the territory contested between France and Brazil, and there was immediately a rush thither from Cayenne. In two years the shipments from this district have amounted to 25,000,000 fr., and the amount would no doubt have been larger had there been no question as to the ownership of the territory. The French government claims 8% of the gold produced in French Guiana, and in addition levies a tax of 10 fr. per kg. It is probable that a good deal of gold is shipped clandestinely from French Guiana into Brazil to avoid these imposts.

The production of gold in Dutch Guiana in 1897 was 32,983 oz. against 23,519 oz. in 1896.

Hungary.—C. Von Racz states that gold mining has been carried on in Transylvania for 2,000 years. Until three foreign companies began mining the production was small, but since they began operations on a large scale the annual output has been considerable. He is of the opinion that with the reforms in the mining laws and with adequate capital, the Hungarian gold production might be increased still further.

An extensive stratum of auriferous gravel was reported in 1897 to have been opened near Offenbanya, in Transylvania. The deposit, which is of great thickness and extent, lies on crystalline schists. The workable thickness varies from 2 to 5 yards, and the tenor of gold from 4 to 10 g. per ton. There is ample water power in the vicinity. These deposits appear to have been known to the Romans.

India.—The production of the Colar field in Mysore, which is the only district in British India now actively exploited, increased largely in 1897. In addition to the Colar field there is a small amount of gold produced in the Madras Presidency, not exceeding $25,000 yearly. A small amount of placer gold comes from Burma; and the Choukpazat mines, also in Burma, began to produce in 1897.

The Mysore company produced upward of £50,000 more gold than in 1896 and paid its shareholders 110% in dividends against 100% in the previous year. This mine is now opened by 12 shafts, one of which is more than 1,700 ft. deep, and recent developments have largely increased the reserves of ore, at the same time showing the grade to be well maintained. The company is adding 40 stamps to its mill, which should result in an increased output in 1898. The Ooregum mine is opened by eight shafts, one of them 1,470 ft. deep. Important new developments were made in this mine in 1897.

The Nundydroog mine is opened by five shafts, of which the deepest is down 1,240 ft. The Champion Reef mine paid its shareholders 100% in dividends in 1897. The Coromandel company is also making an addition of 30 stamps to its mill.

The average yield of the ore in the Colar field in 1897 was $22.50 per ton. At the end of the year there were 570 stamps in the district. A considerable proportion of the gold production of Mysore is now obtained by the cyanide process, the

Mysore, Champion Reef, and Nundydroog companies operating large cyanide works, while there are several smaller cyanide works in the district. Statistics of the production of these mines from the beginning are given in the subjoined table:

Companies.	1884.	1885.	1886.	1887.	1888.	1889.	1890.	1891.
	£	£	£	£	£	£	£	£
Mysore	4,431	23,987	62,520	50,826	73,972	198,152	229,961	260,069
Ooregum	....	....	....	....	• 15,246	62,503	104,041	132,974
Nundydroog	....	....	....	5,787	26,487	22,947	58,906	89,345
Mysore Reefs	....	....	....	....	....	542	812	730
Nine Reefs	....	....	....	551	8,071	5,273	868	....
Kempinkote	....	....	....	1,682	4,139	5,714	5,242	....
Mysore West	....	....	....	....	....	....	....	....
Mysore Wynaad	....	....	....	....	....	....	....	....
Balaghat Mysore	....	....	....	682	10,538	13,782	18,821	20,282
Goldfields of Mysore	....	....	....	....	....	....	....	....
Yerraconda	....	....	....	....	880	233	....	....
Champion Reefs	....	....	....	....	....	....	....	....
Coromandel	....	....	....	....	....	....	....	....
Oriental	....	....	....	....	....	....	....	....
Road Block	....	....	....	....	....	....	....	....
Totals	4,431	23,987	62,520	59,478	133,833	304,146	413,651	503,400

Companies.	1892.	1893.	1894.	1895.	1896.	1897.	Total.	Quartz Crushed.
	£	£	£	£	£	£	£	Tons.
Mysore	249,393	254,205	202,302	247,589	440,817	497,887	2,791,121	508,598
Ooregum	202,887	280,970	256,785	264,934	247,329	209,299	1,776,968	331,817
Nundydroog	118,026	103,558	110,784	144,161	168,613	212,030	1,060,594	235,411
Mysore Reefs	....	....	1,027	4,119	7.370	2,419	17,019	9,504
Nine Reefs	....	....	....	4,532	241	869	15,405	11,694
Kempinkote	....	....	....	....	....	....	16,777	14.283
Mysore West	....	....	} 1,039	15,400	24,038	39,899	80,376	85.238
Mysore Wynaad	....	....						
Balaghat Mysore	27,129	27,830	21,907	1,122	10,215	636	147.944	21,817
Goldfields of Mysore	....	....	....	....	....	6,972	6,972	(?)
Yerraconda	....	....	....	436	....	....	1,049	737
Champion Reefs	25,711	119,662	204,441	272.472	328,996	473,114	1,424,396	275,669
Coromandel	....	....	....	844	24,119	48,462	73,425	26,710
Oriental	....	....	....	....	....	....	....	....
Road Block	....	....	....	....	....	....	....	....
Totals	623,146	786,225	798,285	955,619	1,251,738	1,491,587	7,412,046	1,471,478

The amount of dividends paid is as follows, the figures in parentheses being the amount per fully paid £1 share: Mysore, £1,227,405 (£5 10s. 6d.); Nundydroog, £333,274 (£1 15s. 7d.); Ooregum, £674,981 (£2 1s. 6d. on ordinaries and £2 17s. 6d. on preference shares); Champion Reef, £425,000 (£2); Coromandel, £6,000 (1s.); miscellaneous, £87,500; grand total of all companies, £2,666,660. The total authorized capital of all companies in the field is £2,572,500.

Japan.—According to Mr. Miyamo, chief of the Civil Administration Bureau of Formosa, the gold industry in that island promises to be very lucrative in the near future. The alluvial deposits now being worked were discovered only about 10 years ago, and at present more than 3,000 men are engaged in gold mining on the upper reaches of the Tamsui. Large quantities of gold are smuggled from Formosa into China.

Korea.—Placer gold mining is carried on very largely in the northern portion of Ping-yang Province in the tributary streams of the Tatong and Yalu rivers, and in 1895 the Korean government granted to an American syndicate a concession to work gold in the district of Wŏnsan—not to be confounded with the treaty port—a tract of about 25 sq. miles, situated about 100 miles north of Ping-yang city. There are about a dozen foreigners there at present and a mill has been set up. The wages paid to the Korean miners are 40c. a day (10d.). A German syndicate has obtained a concession for a small portion of the district adjoining the territory held by the American syndicate. The district is well timbered and well watered and has been extensively prospected in the past by the natives.

Mexico.—The production. of gold in Mexico in 1897 was $7,121,189 against $6,309,181 in 1896. It is impossible to trace this output to its sources. A good deal of gold is produced in Mexico in connection with silver, while gold mines proper are worked principally in Oaxaca, and Sonora. At Copalquin in Durango there is a group of gold mines which have lately been very productive.

The gold mines of Oaxaca were described by Maurice Clark.* The principal mining districts are from 20 to 60 miles distant from the city of Oaxaca, and may be divided into three groups, that of the Sierra Juarez to the northeast, that of the central mountains to the west and southwest, and that of the Tlacolula and Ocotlan districts lying to the south and southeast.

The mines of the Ixtlan district in the Sierra Juarez are the oldest. The country rock is granite, gneiss, slate, and schists, and in some cases limestone. The ores, which carry both gold and silver, yield their value easily in arrastras and by the patio process. The freight to Oaxaca is from $16 to $40 per ton, Mexican currency.

In the districts of Etla and Zinatlan, in the central mountains, the ores are entirely gold bearing. The formation is gneiss and granite. The conditions for mining in this district are excellent.

In the districts of Tlacolula and Ocotlan the principal mines are in the vicinity of Taviche and Totalapa. As a rule silver predominates over gold. The ore is beneficiated generally by the patio and lixiviation processes.

The gold mines of Altar, in Sonora, were described by W. G. Waring.† Considerable attention has been attracted recently to this district, which was formerly (from 1833 to 1848) rather productive. The country rock is granite and gneiss, bounded by sharply upturned slates, quartzites, shales, and limestones on the east and west. Eruptive dikes and laccolites are common. The gold-bearing veins and placers occur generally near the contact of the sedimentary rocks with the granites, sometimes entirely within the granite. The placers lie on the gently sloping flanks of the granite hills. The bed rock is sometimes granite but generally calcareous sedimentaries. The depth of the gold-bearing alluvium varies from a few inches to many feet. In some places very rich deposits have been worked by tunneling under a layer of calcareous cement. Velasco estimated the yield of the Cienega and Llanos placers at between $4,000,000 and $5,000,000 annually up to 1844. At present with about 500 Yaqui Indians at work the production is from $200,000 to $400,000. Two of the old lode mines, namely, Cerro Colorado and El Plomo, have been reopened recently with successful results; other old mines, of which there are about 200, are now to be exploited again. In this district lead seems to accompany the gold everywhere.

---

* *Engineering and Mining Journal*, July 10, 1897.

† *Ibid.*, March 13, 1897.

Newfoundland.—There is a production of about 3,000 oz. of gold and 4,000 oz. silver per annum, which is obtained by the Cape Copper Co. from low-grade pyrites.

New Guinea.—In Australia and the islands of Polynesia there was considerable interest in the early part of 1897 in the new gold fields discovered in New Guinea, a good many miners going thither from Queensland especially. It was found, however, that the conditions were such as to make the new fields unprofitable and the miners who went there suffered severely from hardships and sickness. By the beginning of August the rush had practically ceased.

In time, when tracks are cut and the hill tribes are more tractable, the country may become habitable, and white men may live there; but under present conditions men who make their way thither carry their lives in their hands, not only as to danger from the natives, but as to climate. Traveling through the dense jungle of the tropics in a never-ceasing moist, unwholesome atmosphere, where every article required has to be carried on men's backs, because horses cannot be used, is a hardship which few gold hunters can stand. One traveler in the island last year reports that the existence of gold and its distribution over a very large area is undoubtedly proved, but it still remains to be shown whether any alluvial deposit will pay the expense of finding and working, quite apart from the improbability of a mountainous, heavily jungled, tropical country, fever-laden in the lowlands, and muffled in moss and mist on its ranges, ever turning out a poor man's field.

Nicaragua.—Considerable mining machinery was sold in 1897 to owners of gold mines in Eastern Nicaragua, and it is not unlikely that there will soon be an important development in the gold resources of this republic. There are at present 26 gold mines opened on the Atlantic coast, not including placer claims. Thomas O'Hara, United States Consul at San Juan del Norte, reported to the Department of State under date November 8, 1897, that "it is unquestionably true that there are valuable gold mines in Eastern Nicaragua." A new discovery of gold was made in 1897 in the Siguia district, about 30 miles from Rama and 80 miles from Bluefields. The district is favorably situated for exploitation.

A recent decree levying a duty of $1 (gold) per oz. on ingot and $2 per oz. on gold dust exported from Nicaragua disturbed considerably owners of gold mines in this republic. The duty previously had been 80 centavos, or 35.4c., United States currency, an ounce. The shipments of gold from Bluefields during the year ended June 30, 1896, amounted to $137,929 (United States). The shipments for the year ended June 30, 1897, amounted to $169,565, an increase of $31,636.

Norway.—The Kongsberg mines in the fiscal year 1896–97 produced 5,179 kg. of refined silver and 300 kg. of silver as sulphide and in argentiferous copper. The net income after making the usual allowance for amortization of capital was 103,000 kronen, which was less than in the previous year, owing to the lower price of silver. The mechanical improvements introduced in the dressing works in 1895 and the treatment of the poor slimes by the cyanide process have continued to give satisfactory results. There is an improved showing of ore in the Gottes Hilfe mine. The prospect in the Königs mine, Hans Sachsen mine, and the new mines opened in 1886 are unpromising.

The exploitation of the gold lodes at Bömmeloen, on the west coast of Norway, was practically suspended in 1897. On the other hand the old mine at Eidsvold, at the southern extremity of Lake Mjösen, was put in operation by an Anglo-Norwegian company which employed over 100 men. The veins at Svartdal in the Telemarken district were further investigated by the French Apatite Co., which has erected a metallurgical plant for the treatment of the ore.

Peru.—While the gold resources of this country are known to be large and the production is increasing, the gain is slow on account of the difficulty of access to the rich veins and alluvial deposits known to exist in the Amazonian region and elsewhere. The inefficiency of the native labor and in many places the unfavorable climatic conditions retard the development.

According to a report by E. J. Prew, now deceased, transmitted to the Department of State by the United States Minister to Peru, the gold district of Carabaya is practically virgin, although veins and deposits exist in many places. The country is difficult to prospect, however, being covered with thick vegetation, and consequently few discoveries are made except in stream beds. The only mine of consequence that is in operation at present is the Santo Domingo, which was recently purchased by an American company for $250,000. This company is preparing to erect a 20-stamp mill.

The ore in all parts of the Carabaya district is similar and in most cases occurs in slate. The Santo Domingo vein varies from 1.5 to 8 ft. in width and the ore is very rich. Most of the workmen employed in the district at present are Indians, who are paid 40c. per day (Bolivian money) payable in 20c. pieces. These Indians are sent from the nearest town (by the authorities) for a certain time, and when their contracts expire they either return or wash gold on their own account. The country is very rich, and there is scarcely a stream that does not carry gold.

Most of the Carabaya mines need timbering, the veins occurring in decomposed slate (usually auriferous) which slips badly. Outside of the Santo Domingo mine not much systematic work has yet been done in the district. The production in the last 18 months has been about 30,000 troy oz., most of which has come from the Santo Domingo mine.

The great drawback to this district, aside from its remoteness and difficulty of access, is the high cost of acquiring property. For each claim, which is usually 200×200 m. in area, the judge of the Macusani district collects 1,000 soles besides minor charges, the sol being worth 1s. 11d., or 46c., United States currency. An individual can legally denounce four claims and a company seven in the same district. A tax of 30 soles per claim, payable semi-annually, is levied by the government.

In making the journey to the Carabaya district there are three days' travel by railway from Mollendo to Santa Rosa, four days by mule-back from Santa Rosa to Saco, and two days on foot from Saco to the Inambari River. Generally speaking the roads are not bad until Saco is reached. The cost of freighting machinery to the district from the nearest railway station may be estimated at $250, United States currency, per 2,240 lb. The altitude of the district varies from 3,783 m. (12,294 ft.) at Coaza to 4,336 m. (14,092 ft.) in Macusani.*

---

* *United States Consular Report*, Vol. LVI., No. 208, January, 1898, pp. 99–102.

The gold fields of Sandia, a province which forms the northeastern portion of the Department of Puno, were described by H. Tweddle.[*] This district, which is situated high in the Cordillera, shows clay slate and schists as the predominant country rock, intersected by many veins of quartz, with here and there exposures of granite, gneiss, sandstone, and volcanic rocks. There also exist large deposits of alluvium resulting from the disintegration of these rocks. Gold is found in veins, in alluvial deposits and in river beds, and its distribution is so wide that it may be said truly that the sands of every river in the province contain gold. These deposits have been worked by the natives for many centuries, but there are only a few places where they are exploited by modern methods, although their possibilities are considerable.

The mines of the Department of Ancachs were described by F. J. Schafer,[†] who stated that from Chimbote to Caráz there are numerous quartz veins, of which the only ones yet developed are the properties of the Macate Mining Co. and the Calluash Gold Mines Co. On the river Chuquicara, at its junction with the Santa, from 100 to 150 Indians occupy themselves during low water (from May until November) washing the sand over sheepskins with extraordinary results. This district is said to enjoy better climate and not to be subject to the enormous transportation difficulties of Sandia and Carabaya. Much of the ore is rebellious, although there is considerable free-milling quartz disclosed.

In the *Engineering and Mining Journal* of December 4, 1897, Mr. Schafer reported the discovery of rich gold ore at Huanuco, on the eastern side of the Andes. He considers that these districts—Carabaya, Sandia, Pataz, Huanuco, etc., present great opportunities.

The quantity of gold entered at the Casa Nacional de Moneda of Lima for export in 1897 was equivalent to 87,678 kg. of fine metal against 175,404 in 1896. According to the *Boletin de Minas* of January 31, 1898, this falling off can only be explained by the supposition that a large amount of gold must have remained in the country, while an increased amount may have been exported clandestinely in order to avoid the government tax of 3%, since it is noteworthy that the production of the mines increased. Under these circumstances we have estimated the production of gold in Peru in 1897 at 180 kg., a slight advance over 1896. The entry of silver for coinage and export was 58,368 kg. of fine metal in 1897 against 70,123 in 1896. The figures for 1897 are partly estimated since the tax of 3% on silver having been removed by the law of September 11, 1897, it was not required that silver destined for export should be entered at the Mint after October 1.

Russia.[‡]—The production of gold in Russia in 1897 was 32,408 kg. against

---

[*] *Engineering and Mining Journal*, May 8, 15, 1897. [†] *Ibid.*, Sept. 4, 1897.

[‡] We have computed the gold production of Russia in the same manner as previous years, namely, by the addition of 10% to the deposits at the Imperial Mint in order to allow for gold clandestinely exported and consequently escaping record in the Mint's statement. The falling off in the Russian production from 1896 to 1897 which appears in our statistics is only nominal. The shipments from Tomsk and Irkutsk reach St. Petersburg several months after being deposited by the miners at those places and therefore some of the gold mined during the calendar year does not reach St. Petersburg until the first month of the following year. The receipts at the Mint during the calendar year 1896 were 1,979.25 pouds. In our statistics for 1896 we added to this a shipment of 610 pouds which left Siberia in December but did not reach St. Petersburg until January 6. Since no similar deduction has been made at the beginning of the year our statistics for 1896 showed a greater increase over 1895 than they ought to have showed. In 1897 the receipts at the St. Petersburg Mint were 2,185.25 pouds. We deducted from these the shipment of 610 pouds previously credited in 1896 and added 278.40 pouds which was shipped from Siberia in December and arrived in St. Petersburg early in January, 1898.—[ED. MINERAL INDUSTRY.

46,653 kg. in 1896. The conditions of mining in Siberia are fully described in a special article by M. de Batz, which is appended. In addition there is very little to be said at the present time, except that the discovery of rich placers in the district situated between Aptchoumoukan and Ayan in Kamtschatka by the expedition led by MM. Rogdonowitch and Lemiakin has recently been reported. They are said to have found also at the mouth of the Ditachra River, near Ayan, in 14 different places in volcanic rocks, veins of rich gold ore. It is also worthy of note that the construction of the Siberian Railway is causing a scarcity of laborers in many of the older districts of Siberia, this work having proved more attractive than gold mining and drawn all the likely labor within reach. Of course, however, this scarcity of men is only temporary.

The work of laying down the rails of the Central Siberian Railway was discontinued for the winter of 1897–98 in October, at the village of Tooluon. This year (1898) it is intended to push the construction as far as Irkutsk, which is now about 350 versts distant. It is hoped that Irkutsk will be reached by the beginning of September. On the Siberian line 5,000 miles of steel rails have been laid already at a cost of 350,000,000 rubles. July 1, 1904, it is thought, will see locomotives running from the shores of the North to those of the Japan Sea. Within 18 months trains are to run over the Siberian road to the Amoor River. Thence, by fast steamer, passengers, post parcels, and freight are to be pushed on to Chaborowka; thence, in 18 hours, over the South Russian section of the Siberian road, to Vladivostock, making the time from London to the most important harbor of the Japan Sea 17½ days.

Late in 1897 there was found in the placers of the Munisinsk Taiga, in East Siberia, in the district of Tomsk, a nugget weighing 30.5 kg., the largest on record.

According to M. Levat* the gold-bearing placers of Siberia, which are remarkably uniform in their character, are found in connection with formations—schists, eruptive and crystalline rocks—which may perhaps be attributed to the Azoic period, and at least to the Silurian epoch. The formation of the placers, however, is recent, the existence in them of the remains of the mammoth and other contemporary animals placing them in the post-Tertiary period. In this respect the Siberian placers differ radically from those of California, which belong chiefly to the Miocene period.

No exploration has yet been made for gold veins in the Trans-Baikal. There are only two stamp mills in the whole region and only one place where there has been any attempt at deep mining. In the Oural, however, the gold-bearing formation is well understood. It consists of chloritic, argillaceous and talcose schists, traversed by veins of an eruptive rock, locally called berezite, which is in fact a granite from which the feldspar has disappeared, leaving only the quartz and white mica. These veins of berezite vary in width from 4 to 40 m. They are in turn seamed by numerous small veins of quartz averaging perhaps 5 cm. in thickness. The veins are generally distributed in groups, and their direction is usually perpendicular, or nearly so, to that of the veins of berezite.

All these quartz veins carry some gold, which is usually associated with pyrites or its oxidation products. Chalcopyrite, galena, etc., often occur, but gold is

---

* *Engineering and Mining Journal*, Jan. 23, 1897: "The Gold Mines of Eastern Siberia," by D. Levat.

rarely associated with these minerals. The berezite and sometimes the inclosing schists also carry some gold, and deposits of this kind have been explored to a small extent, but generally they do not carry enough value to warrant their exploration. Thus, the berezite of the Ouspien and Kionepzeff mines carries only about 2.36 g. gold per ton. The microgranulites of Pisminskagora vary from 0.65 to 10 g. per ton, while the serpentine gangue varies from 1.3 to 2.3 g. A rock called aplite, which is a granite without mica, occurs extensively in Eastern Siberia in somewhat the same manner that the berezite is found in the Oural, but apparently the mineralizing action has been stronger since the veins of gold-bearing quartz average at least 5 cm. in width.

The presence of gold in the aplite and berezite leads to the belief that it was deposited at the same time with these rocks, from which it was subsequently segregated in the veins of quartz contained in them. According to M. Levat the veins of the Ourals decrease in richness with depth, and the same phenomenon is to be expected in Eastern Siberia.

The ground below a certain depth in the Trans-Baikal is always frozen. The method of working alluvial deposits in this kind of ground is practically the same throughout Siberia. Owing to the expense, of course it is only the richer deposits that will bear this method of exploitation. An instance of such work is found in the Malamalski placers, where the ground is opened by five shafts. The pay streak, which lies about 100 ft. below the surface, varies from 6 to 11 ft. in thickness and in tenor from 1.4 to 6.5 g. per ton. The shafts are sunk about 50 m. apart, and are joined by galleries from which chambers are worked at regular intervals, extending to the border of the deposit. The chambers are opened 4.3 m. wide and pillars of the same width are left between them until the mine is abandoned. All the working galleries are carefully timbered, the lagging in most cases being tongued and grooved plank.

In working out the ground the usual method is to pile wood at the breast of the chamber; then fire it and cover the burning mass with charcoal, the object being to concentrate the fire as much as possible against the breast of the chamber. In general it is assumed that 1 ft. in thickness of wood will thaw out an equal thickness of gravel. A good deal of care has to be exercised in the timbering, since the high temperature prevailing in the mine is likely to thaw the ground overhead and cause slips or runs. The method of timbering does not differ especially from that commonly employed in other parts of the world in loose and running ground.

This underground work is carried on in Siberia only in the winter, when outside work is impossible. In the winter of 1894-95, in 6.5 months working, during which there were 13,770 days of work of men and 5,276 days of horses, there were consumed 2,345 cords of wood and 1,011 cu. m. of charcoal for thawing, 180 kg. of oil and 120 kg. of candles for illumination, with an outturn of 4,035 metric tons of gravel, from which there was obtained 65.64 kg. of gold or about $43,600. About 80% of the assay value of the gravel was recovered in the washing.

Servia.—According to the *Montan Zeitung* gold mines were largely worked in this kingdom in Roman times and in the middle ages, but during the long Turkish oppression operations ceased. The richest source of gold known to the Romans was on the river Timok. Only alluvial deposits were then worked, but traces of systematic mining are visible, dating from the 16 years of Austrian occupation in the last century. It seems probable, therefore, that the deposits might now be worked with profit. A railway will shortly be constructed. Building materials, timber and water power are abundant. Labor can be obtained at about 30c. a day, and the climatic conditions are very favorable.

South Africa.—The South African Republic has now acquired the second place among gold-producing countries, its output in 1897 having been $56,718,679, of which $51,913,607 was from the Witwatersrand and $4,805,072 from De Kaap and the other outside districts.

Rhodesia.—No mining, properly speaking, is going on in Matabeleland and Mashonaland at the present time, but a good deal of exploration work is in progress, although this is being done entirely in the southern part. North of the Zambesi no work has been done. The general character of the gold belts south of this river are now pretty well known. The most promising prospects at present are considered to exist in the Gwelo region. It is not expected, however, that there will be any output from this country before the middle of 1898, since machinery which has been ordered for certain mines has been delayed *en route.*

Two or three mines which have been opened show something of what may be expected in Rhodesia. The Phœnix reef averages 2.5 ft. in width and has been traced 1,000 ft. The ore averages 1 oz. per ton. The Globe mine, which is situated 130 miles from Buluwayo, has an 18-in. vein averaging 2 oz. The Matabele Sheba, 20 miles from Buluwayo, has a 4-ft. vein averaging 1 oz., while in the Marlborough, 4 miles from Buluwayo, there is a vein 2.5 ft. wide averaging 1.5 oz. In the Gwelo region the Rose mine shows a 3-ft. vein averaging 2 oz. For a long time, however, the development of the mineral resources of Rhodesia will be slow on account of the high cost of transportation thither, Buluwayo being 1,400 miles from Cape Town. Some day a railway will probably be constructed to Beira, its natural port, whither the distance is only 400 miles.

Witwatersrand.—(By W. Y. Campbell): As to gold production on the Witwatersrand the points of continuing interest are: (1) The life of the mines; (2) the profits per ton of ore; (3) the advance in systems of work. As regards the first I shall merely say the hugeness of the ore reserves has been demonstrated by the close assessments of Schmeisser, Hamilton Smith, De Launay, and dozens of others. As regards the second point, progress is slow, but the fault is, not with the industry or its ore, or its conductors, but with the unfavorable conditions prescribed by the government at Pretoria. The mine managers have gone on, however, lowering costs so far as they can in their limited sphere of freedom, and despite the incessantly inimical policy of the government the net result of these efforts is that the output of gold in 1897 was £10,500,202 against £7,852,189 in 1896; the 1897 dividends were £2,850,000 against £1,523,584 in 1896; the working costs were 23s. 3d. per ton in 1897 against 27s. 4d. in 1896; the extraction was 39s. 3d. in 1897 against 38s. in 1896. The capitalization of the dividend payers remained practically the same. These developments are summarized in the accompanying table, in the preparation and checking of which I am heavily indebted to Hennen Jennings, Consulting Engineer, and to Samuel Evans, of the Eastern Investment Co.*

---

* Mr. Campbell uses the statistics of the Witwatersrand Chamber of Mines, which differ slightly from those of the State Mining Engineer of the South African Republic. The latter figures have been employed by us in the general table of the world's gold production as being the official statistics.

PRODUCTION OF THE WITWATERSRAND MINES IN 1896 AND 1897.

Name.	1896.						1897.					
	Average Stamps.	Production.	Months Worked.	Grade of Ore Per Ton Milled. October.	Working Costs. October.	Dividends.	Average Stamps.	Production.	Months Worked.	Grade of Ore Per Ton Milled. October.	Working Costs. October.	Dividends.
		£		s. d.	s. d.	£		£		s. d.	s. d.	£
Bonanza	11	99,181	5	107 11	42 11	....	37	325,354	..	97 9	34 3	150,000
Champ d'Or (French)	43	93,788	11	14 5	......	....	34	79,360	..	52 11	......	....
City & Suburban	140	384,009	..	33 7	24 10	68,000	160	490,877	..	46 4	23 5	204,000
Crown Reef	120	445,265	..	48 9	28 5	132,000	120	503,309	..	49 11	24 10	204,000
Durban Roodepoort	63	236,529	..	42 0	......	56,250	80	260,352	..	44 2	......	100,000
Ferreira	80	472,687	..	75 6	28 0	247,500	80	459,828	..	73 6	23 7	270,000
Geldenhuis Deep	111	195,658	..	23 5	25 0	....	153	379,026	..	34 3	22 2	90,000
Geldenhuis Estate	120	242,874	..	31 2	21 7	25,000	120	351,275	..	37 10	18 8	90,000
Geldenhuis Main Reef	30	61,800	..	43 9	25 0	....	30	64,558	..	32 5	20 7	22,000
George Goch Amalgamated	93	147,706	..	27 8	25 10	....	90	123,297	..	19 7	22 6	....
Ginsberg	17½	48,813	..	29 5	......	....	40	133,318	..	46 10	......	40,000
Glencairn	75	117,075	9	(c)	......	....	53	111,156	..	28 8	......	....
Henry Nourse	56	263,754	..	53 6	32 6	37,500	60	314,056	..	65 0	24 3	156,250
Johannesburg Pioneer	30	122,455	..	80 5	......	84,000	30	148,020	..	(d)	22 6	105,000
Jubilee	55	103,150	..	31 2	......	30,000	46	110,775	..	36 10	......	45,000
Jumpers	100	181,351	..	26 4	25 10	30,000	100	221,359	..	(d)	24 2	60,000
Lancaster	(a)	2,792	5	(c)	......	....	8	12,238	..	27 9	......	....
Langlaagte Estate	160	342,386	..	28 10	18 6	141,000	198	429,450	..	26 4	15 7	141,000
Langlaagte Block B	75	110,356	..	23 7	......	....	75	150,255	..	(c)	......	....
Langlaagte Royal	64	89,211	7	21 3	......	....	(c)	(c)	..	(c)	......	....
Langlaagte Star	28	30,565	8	27 4	......	....	5	27,133	..	30 6	......	....
Langlaagte United	(b)	4,811	4	(c)	......	....	35	49,508	..	26 1	......	....
May Consolidated	100	198,647	..	31 7	......	55,000	92	206,188	..	26 1	......	....
Meyer & Charlton	74	168,560	..	32 7	21 5	17,000	80	159,975	..	31 9	19 1	42,500
Minerva	30	30,556	9	......	......	....	23	17,306	..	......	......	....
New Chimes	40	65,038	13	20 5	......	5,000	(c)	(c)	..	(c)	......	....
New Comet	41	66,099	9	27 7	......	....	47	134,492	8	46 6	23 11	....
New Crœsus	52	87,882	10	16 5	......	....	(c)	(c)	..	(c)	......	....
New Heidelberg Roodepoort	10	11,320	3	......	......	....	27	29,719	..	......	......	....
New Heriot	63	240,266	..	49 10	28 0	95,084	70	251,094	..	44 3	22 3	111,864
New Kleinfontein	65	15,784	..	(c)	......	....	69	147,811	..	29 4	20 4	....
New Midas Estate	12	36,513	7	47 11	......	....	20	39,380	..	8 10	......	....
New Modderfontein	46	67,842	8	20 4	......	....	47	107,735	..	20 4	......	....
New Primrose	160	383,690	..	24 4	20 0	....	160	408,767	..	32 2	18 3	150,000
New Rietfontein	50	77,271	..	35 5	......	....	13	16,002	3	(c)	......	....
Nigel	30	80,978	..	58 1	......	....	9	37,821	..	41 7	......	....
North Randfontein	4	7,565	1	(c)	......	....	44	83,107	..	28 11	......	....
Orion	13	18,556	2	......	......	....	(c)	(c)	..	......	......	....
Paarl Central	5	12,196	1	(c)	......	....	60	107,499	..	31 10	......	....
Porges Randfontein	22	38,970	5	29 6	......	....	60	166,173	..	35 6	......	50,000
Princess	32	91,874	..	42 6	34 9	....	40	121,979	..	42 3	32 6	16,500
Robinson	120	634,992	..	73 5	31 0	330,000	120	650,357	..	71 4	24 5	412,500
Roodepoort (Kimberley)	27	32,421	8	24 10	......	....	40	50,909	..	31 10	21 11	....
Roodepoort Deep	31	64,186	10	35 2	......	....	3	7,882	1	(c)	......	....
Salisbury	50	88,510	..	27 6	......	....	46	84,645	..	(d)	......	....
Simmer & Jack	100	334,885	..	41 9	......	....	112	259,695	..	29 0	......	....
Stanhope	22	29,975	..	(c)	......	1,700	25	39,231	..	31 4	......	5,250
The Rip	(e)	11,595	..	......	......	....	(e)	34,826	9	......	......	....
Treasury	30	73,378	9	30 10	26 1	....	40	132,505	..	43 3	23 3	....
United Main Reef	70	165,044	..	36 8	23 9	37,500	70	178,013	..	45 5	24 6	60,000
Van Ryn	57½	82,579	..	(d)	......	33,000	80	148,330	..	22 11	......	....
Vogelstruis Estate	7	8,998	1	......	......	....	30	61,596	6	......	......	....
Wemmer	50	192,115	..	52 9	36 0	47,500	50	205,712	..	64 9	26 5	80,000
Witwatersrand	15	36,628	3	23 8	......	....	87	214,786	..	27 7	21 4	....
Wolhuter	100	233,534	..	36 0	26 11	....	100	310,353	..	39 11	21 8	86,000
Worcester (milling only)	32½	81,718	..	30 0	......	51,550	40	78,134	..	30 4	......	28,119
New Crushing Companies:												
Angelo	(c)	(c)	..	(c)	......	....	47	189,443	..	63 1	23 3	....
Balmoral	(c)	(c)	..	(c)	......	....	25	40,347	..	27 4	......	....
Banket	(c)	(c)	..	(c)	......	....	6	7,895	4	......	......	....
Crown Deep	(c)	(c)	..	(c)	......	....	43	162,508	..	49 3	......	....
New Spes Bona	(c)	(c)	..	(c)	......	....	30	67,881	..	29 9	21 11	....
Nourse Deep	(c)	(c)	..	(c)	......	....	5	21,967	1	......	......	....
Marie Louise	(c)	(c)	..	(c)	......	....	5	5,558	..	f22 6	(g)	....
Rand Nigel	(c)	(c)	..	(c)	......	....	8	16,997	..	40 4	30 11	....
Rietfontein A.	(c)	(c)	..	(c)	......	....	25	97,132	..	50 4	18 8	....
Robinson Randfontein	(c)	(c)	..	(c)	......	....	5	30,857	2	......	......	....
Rose Deep	(c)	(c)	..	(c)	......	....	25	83,578	..	42 3	......	....
Van Ryn West	(c)	(c)	..	(c)	......	....	39	80,973	..	23 8	......	....
Violet	(c)	(c)	..	(c)	......	....	6	9,572	2	......	......	....
West Rand	(c)	(c)	..	(c)	......	....	23	49,286	..	25 9	......	....
Windsor	(c)	(c)	..	(c)	......	....	10	16,447	..	19 6	(h)	....
York	(c)	(c)	..	(c)	......	....	8	6,291	1	48 0	......	....
Totals	3,032	7,566,381	..	38 0	27 4	1,523,584	3,563	10,115,202	..	39 3	23 3	2,720,483

Name.	1896.						1896.					
	Average Stamps.	Production.	Months Worked.	Grade of Ore Per Ton Milled.	Working Costs.	Dividends.	Average Stamps.	Production.	Months Worked.	Grade of Ore Per Ton Milled.	Working Costs.	Dividends.
				October.	October.					October.	October.	
Customs Works:		£		s. d.	s. d.	£		£		s. d.	s. d.	£
Rand Central Ore Reducing Co.	......	99,718	..	......	......	......	......	190,560	..	......	......	......
Robinson	......	148,829	..	......	......	......	......	167,954	..	......	......	......
Transvaal Chemical Co.	......	5,212	2	......	......	......	......	......	..	......	......	......
New Chemical Co.	......	6,900	4	......	......	......	......	17,761	..	......	......	......
Banks per other sources	......	80,154	..	......	......	......	......	8,725	..	......	......	......
Grand total	......	7,852,189	..	......	......	......	......	10,500,202	..	......	......	......

(*a*) Experimental. (*b*) Tailings. (*c*) Not crushing. (*d*) No return. (*e*) Dry process. (*f*) Mill only. (*g*) Kimberly Reef trial crushing. (*h*) From surface dump.

In December, 1896, 3,055 stamps were crushing; in December, 1897, the number was 4,280. The figures given in the above table for stamps represent the average per month per annum actually working. Where not otherwise shown, 12 months were worked.

Working costs were less in 1897 than in 1896, solely from closer domestic supervision and economy in administration. Some stores were cheaper, such as coal and lubricants. Coal, owing to supply being in excess of demand, was 30% cheaper. Lard oil was 26s. 6d. against 36s. in the previous year, and so on through certain lines of stores. European labor remained unchanged; native labor is claimed to be cheaper, but I cannot endorse the statement. The gain in the native department is a better tonnage per man per year, I think, after close inquiry. As to the grade of ore it was 1s. 3d. per ton better than in 1896 despite the fact of an increase in the working stamps by 450, or 13%. The cause was more waste rock sorted out and a higher extraction. The best mines are looking to sort out 20% of waste rock from the ore mined in 1898. The extraction from two typical mines was as follows:

(*a*) Gold won by amalgamation, 54 to 60%; from concentrates, 6 to 7.5%; from sands (cyanide), 20 to 23%; from slimes (cyanide), 3 to 5%; general average 89 to 90%.

(*b*) Gold by amalgamation, 56 to 61%; gold by cyanide, 23 to 29%; general average, 80 to 90%.

Both mills run over 100 head of stamps. The costs of (*a*) are under 6s. per ton for all the four processes mentioned. Thirteen grains of gold per ton of the discarded water has been found to be the leakage in that direction, small compared with the Mount Morgan figures, but substantial enough to engage the attention of engineers, as it is doing. The unit of calculation in the percentages above is the fire assay gold contents of the sands as they leave the mill, plus the fine gold caught in the mill. Practically the extraction of that unit is from 80 to 90%, a very creditable result for 6s. ore. An effort is being made to assay all ore going into mill and to claim results on that assay from the management, but I fear the scheme will not work in practice. The "ton" remains nominally 2,000 lb., but the average is doubtless about 1,800 lb.

The main feature of the year has been the starting up of the Deep Level mills, with their 100 to 200 head of stamps and ample development. The assay plans of all these mines, without a single exception, are refreshingly good, and the average of the whole is better grade ore than in the outcrops, of which they are the deep levels. Now, as in many cases, the market valuation of these deep levels is only from 25 to 50% of the valuation of the outcrops, claim for claim; there is prospect that there will be another period of investment and speculation in them. The deep levels have justified their sponsor, Alfred Beit, who with his friends was plucky enough in 1892–3 to not only peg them off and buy them up, but to put up many millions sterling in purchasing, developing, and equipping them, and chief of all was content to wait four years for the big reward now in sight. Apart, however, from the richer shoots in the outcrops line, and these deep levels thereof, the Rand is stagnant. Barely 20 miles of Main Reef is being worked, while the other 30 miles remains idle, with many mines filled with water which would be big producers with costs at 15s. Pretoria blocks the way. At present 52% of the total outcrop is won, and 82% of the total dividends are paid out, by the mines controlled and operated by Wernher, Beit & Co. of London, and their local house of H. Eckstein & Co.

Spain.—Certain gold mines in Galicia which were worked in ancient times by the Romans have been reopened. These mines are situated in the northwestern part of the province in a slate and granite country. The ore is pyritous and somewhat arsenical. The veins are wide and the ore averages between 0.3 and 0.8 oz. per ton. Five groups of mines are now being exploited.

THE COMMERCIAL MOVEMENT OF THE PRECIOUS METALS.

The special feature of the year was the heavy decline in the value of silver, which began in February and continued more or less steadily until August, when the minimum was reached. Subsequently there was a partial recovery, but the metal closed in December at a figure much below the opening in January. No reason can be assigned for the decline besides the continued large production of the metal, which has been undoubtedly in excess of the requirements of the East, where the more part of the silver production of the world is absorbed, and other channels of consumption. The commercial statistics of gold and silver are given in the subjoined tables. The average price of silver in 1897, according to the officers of the United States Mint, was 60.354c. per troy oz., calculated at the average rate of exchange. This average is based on the London quotations for the metal. The average of the daily quotations published in the *Engineering and Mining Journal* was 59.79c., or $19.223 per kg., against 67.1c., or $21.58 per kg. in 1896. These quotations represent the actual market price in New York, and we have used these averages in our computations of the commercial value of silver in 1897.

AVERAGE MONTHLY PRICES FOR SILVER.

Month.	1895.		1896.		1897.		Month.	1895.		1896.		1897.	
	London. Pence	New York. Cents	London. Pence	New York. Cents	London. Pence	New York. Cents		London. Pence	New York. Cents	London. Pence	New York. Cents	London. Pence	New York. Cents
January	27.86	59.69	30.69	67.13	29.74	64.79	August	30.40	66.61	30.93	67.34	24.93	54.19
February	27.47	59.90	31.01	67.67	29.68	64.67	September	30.54	66.90	30.19	65.68	25.66	55.24
March	28.33	61.98	31.34	68.40	28.96	63.06	October	30.89	67.64	29.68	65.05	26.77	57.57
April	30.39	66.61	31.10	67.92	28.36	61.85	November	30.79	67.40	29.46	64.98	26.87	57.93
May	30.61	66.75	31.08	67.88	27.86	60.42	December	30.40	66.47	29.70	65.24	26.83	58.01
June	30.47	66.64	31.46	68.69	27.58	60.10							
July	30.48	66.75	31.45	68.75	27.36	59 61	Year	29.53	65.28	30.67	67.06	27.55	59.79

UNITED STATES IMPORTS AND EXPORTS OF GOLD AND SILVER.

	1896.			1897.		
	Exports.	Imports.	Difference.	Exports.	Imports.	Difference.
Gold:						
Coin and bullion....	$58,256,840	$104,731,259	Imp. $46,474,419	$34,276,401	$34,020,592	Exp. $255,809
In ores..............	209,621	1,963,124	Imp. 1,753,503	99,489	4,575,273	Imp. 4,475,784
Totals............	$58,466,461	$106,694,383	Imp. $48,227,922	$34,375,890	$38,595,865	Exp. $4,219,875
Silver:						
Coin and bullion....	$64,056,741	$30,279,740	Exp. $33,777,001	$58,661,292	$33,082,302	Exp. $25,578,990
In ores..............	994,405	17,730,280	Imp. 16,735,875	308,838	19,254,079	Imp. 18,945,241
Totals............	$65,051,146	$48,010,020	Exp. $17,041,126	$58,970,130	$52,336,381	Exp. $6,633,749

GREAT BRITAIN IMPORTS AND EXPORTS.

Year.	Gold.			Silver.		
	Imports.	Exports.	Difference.	Imports.	Exports.	Difference.
1895............	£36,005,999	£21,369.323	Imp. £14,636,676	£10,669,662	£10,357,436	Imp. £312,226
1896............	24,468,337	30,123,925	Exp. 5,655,588	14,329,116	15,048,134	Exp. 719,018
1897............	30,808,853	30,808,571	Imp. 282	18,032,091	18,780,988	Exp. 748,897

FRANCE IMPORTS AND EXPORTS.

Year.	Gold.			Silver.		
	Imports.	Exports.	Difference.	Imports.	Exports.	Difference.
	Francs.	Francs.	Francs.	Francs.	Francs.	Francs.
1895............	253,875,195	244,381,198	Imp. 9,493,997	141,152,976	78,459,257	Imp. 62,693,719
1896............	298,839,299	310,900,667	Exp. 12,061,368	155,750,771	97,260,425	Imp. 58,490,346
1897............	293,456,750	131,858,875	Imp. 161,597,875	178,424,150	192,755,700	Exp. 14,331,550

SHIPMENTS OF SILVER FROM LONDON TO THE EAST.

Year.	India.	China.	The Straits.	Japan.	Totals.
1895..................	£3,624,496	£1,652,528	£753,883	£175,000	£6,205,902
1896..................	4,838,778	740,285	824,536	1,029,300	7,432,800
1897..................	5,805,006	559,136	739,203	....	7,103,345

GOLD HOLDINGS IN 1897. (*a*)

Bank.	January 1.	July 1.	December 31.
Associated New York..........	$76,342,300	$90,400,200	$106,588,500
England	172,590,460	184,402,515	156,936,340
France........................	381,665.000	240,962,400	388,110,000
Imperial German..............	201,140,000	235,020,000	222,085.000
Austro-Hungary...............	151,070,000	179,720,000	151,980,000
Netherlands..................	13,171,000	13,153,000	13,145,000
Belgian National.............	20,137,000	20,451,000	21,180,000
Spain.........................	42,642,000	44,597,000	47,155.000
Italy..........................	59,835,000	58,880,000	60,055,000
Russia.........................	489,980,000	479,990,000	579,665,000

(*a*) The holdings of the Imperial Bank of Germany and the Belgian National Bank include silver also.

COINAGE OF THE MINTS OF THE UNITED STATES.

Year.	Gold.	Silver.	Year.	Gold.	Silver.	Year.	Gold.	Silver.
1892........	$34,787,223	$12,641,078	1894........	$99,474,913	$6,024,898	1896........	$47,053,060	$23,089,899
1893........	30,038,140	12,560,985	1895........	59,596,857	5,698,010	1897........	76,028,485	18,846,701

GEOLOGICAL OCCURRENCE AND ASSOCIATES OF THE TELLURIDE GOLD ORES.

By J. F. Kemp.

I. Introduction. II. Minerals containing tellurium. III. General geological relations. IV. Review of the regions productive of tellurides. *a.* Hungary. 1. Nagyág, p. 299. 2. Offenbánya, p. 301. *b.* United States. 1. Arizona, p. 304. 2. Southern Appalachians, including Virginia, North Carolina, Georgia, and Maryland. 3. California. 4. Colorado, including Boulder County, p. 305; Clear Creek County, p. 308; Custer County, p. 308; Eagle County, p. 309; El Paso County, p. 308; Gilpin County, p. 311; Hinsdale County, p. 311; Lake County, p. 311; La Plata County, p. 311; Ouray County, p. 311; San Juan County, p. 311; Summit County, p. 312. 4. Maine. 5. Montana. 6. Oregon. 7. South Dakota. 8. Texas. 9. Utah. *c.* Canada. *d.* Honduras. *e.* Mexico. *f.* Siberia. *g.* Spain. *h.* Westralia. V. Résumé.

TELLURIUM, whose symbol is Te and whose atomic weight is 125, belongs in the sixth group of elements according to the periodic law, and is usually classed with sulphur and selenium, with which it has many properties in common. In other respects it differs, however, and exhibits some features markedly similar to antimony, and others that resemble chromium, molybdenum, tungsten, and uranium.

Tellurium was first suspected as a new element in 1782 by F. J. Müller von Reichenstein, and was called by him[*] *Aurum problematicum.* Samples of a dark, glistening ore had been found a short time previous to this by a Hungarian peasant, who was prospecting the wild gorges near Nagyág in Transylvania. The ore was brought to the fortress of Karlsburg, to Herr von Born, through whom it reached Müller von Reichenstein. The discovery of gold in it, in combination with some unrecognized substance, suggested the name *Aurum problematicum.* Von Reichenstein, however, felt distrustful of his determinations and sent some of the material to Bergman, the distinguished Swedish chemist, to determine whether it contained antimony or not. Bergman decided that there was no antimony, but scarcity of material prevented him going further, and it remained for Klaproth in 1798 to identify the new element and name it tellurium. From this time onward, Nagyág and another Hungarian mining district near Offenbánya remained for many years, and indeed until the development of Boulder County, Colo., in the early seventies, as the only localities where tellurides of gold and silver were recognized as existing in economic quantities. In the last 10 years, however, tellurides have been discovered in a number of the newer mining districts, and the evidence has been accumulating that the gold of not a few older ones may have been originally in combination with this element. A brief review of the geological relations of these interesting minerals may prove suggestive, and may lead to their further identification and recognition.

---

[*] See in this connection G. vom Rath, *Naturwissenschaftliche Studien. Erinnerungen an die Pariser Weltausstellung* 1878, p. 176. Bonn. 1879.

MINERALS CONTAINING TELLURIUM.[*]

Altaite, PbTe: Te, 37.7%; Pb, 62.3%; Telluride of lead. Haidinger, *Handbuch der bestimmenden Mineralogie*, p. 556, 1845.

Calaverite, $(AuAg)Te_2$: variable; the original analysis gave Te, 55.89%; Au, 40.70%; Ag, 3.52%; Telluride of gold and silver. F. A. Genth, *American Journal of Science*, XLV., p. 314, 1868. Not recognized as a distinct species by Dana.

Coloradoite, HgTe: Te, 38.5%; Hg, 61.5%; Telluride of mercury. F. A. Genth, *Proceedings American Philosophical Society*, XVII., p. 115, 1877.

Durdenite, $Fe_2(TeO_3)_3 + 4H_2O$: TeO_2, 67.1%; Fe_2O_3, 22.7%; H_2O, 10.2%. Dana and Wells, *American Journal of Science*, XL., p. 80, 1890.

Emmonsite, hydrated ferric tellurite, formula uncertain: Te(Se), 59.32%; Fe, 14.32%; H_2O, 3.28%. W. F. Hillebrand, *Proceedings Colorado Scientific Society*, II., p. 20, 1885.

Ferrotellurite, composition and character not definitely established. F. A. Genth, *Proceedings American Philosophical Society*, XVII., p. 119, 1877.

Henryite, a name proposed by F. M. Endlich for a supposed new telluride which, without an analysis, was given the formula 3PbTe + FeTe. *Engineering and Mining Journal*, XVIII., p. 133, Aug. 29, 1874. Genth pronounces it a mixture of altaite and pyrite, and it is generally regarded as a mixture. *Proceedings American Philosophical Society*, XIV., p. 230.

Hessite, Ag_2Te: Te, 36.7%; Ag, 63.3%; Telluride of silver. Froebel, *Grundzüge*, p. 49, 1843.

Joseite, formula uncertain; Seleno-telluride of bismuth. Original analysis, Te, 15.93%; S, 3.15%; Se, 14.8%; Bi, 79.15%. Kenngott, *Das Mohs'sche Mineralsystem*, p. 121, 1853.

Krennerite, formula uncertain; Telluride of gold and silver. If $AgAuTe_2$ = Te, 45.1%; Au, 35.5%; Ag, 19.4%. G. vom Rath, *Monatsberichte der königlichen, preussischen Akademie der Wissenschaften zu Berlin*, p. 292, 1877.

Lionite, a mixture of native tellurium and quartz, named Lionite by Th. Berdell because it was regarded as a new mineral. The specimen came from the Mountain Lion mine, Boulder County, Colo., and hence the name. Th. Berdell, *Proceedings American Philosophical Society*, p. 172, 1877.

Magnolite, supposed tellurate of mercury, Hg_2TeO_4. F. A. Genth, *Proceedings American Philosophical Society*, XVII., p. 118, 1877.

Melonite, perhaps Ni_2Te_3: Te, 76.2%; Ni, 23.8%; Telluride of nickel. F. A. Genth, *American Journal of Science*, XLV., p. 313, 1868. W. F. Hillebrand. *Proceedings Colorado Scientific Society*, I., p. 123.

Montanite, $Bi_2O_3,TeO_3,2H_2O$: TeO_3, 25.7%; Bi_2O_3, 68.9%; H_2O, 5.4%; Hydrous tellurate of bismuth. F. A. Genth, *American Journal of Science*, XLV., p. 318, 1868.

Nagyagite, sulphotelluride of lead and gold; antimony also shown by recent analyses. Formula uncertain. One analysis gave: Te, 17.72%; S, 10.76%;

---

[*] The derivations are chiefly taken from A. H. Chester's invaluable *Dictionary of the Names of Minerals*, New York, 1896. The writer's thanks are due Professor Chester, for personal advice. The compositions are from Dana's *Treatise on Mineralogy*, 1892.

Sb, 7.39%; Pb, 56.81%; Au, 7.51%; Fe, 0.41%. Haidinger, *Handbuch der bestimmenden Mineralogie*, p. 566, 1845.

Petzite, $(AgAu)_2Te$: variable; if Ag : Au as 3 : 1, Te, 32.5%; Ag, 42%; Au, 25.5%. Haidinger, *Handbuch der bestimmenden Mineralogie*, p. 556, 1845.

Schirmerite, a name given by F. M. Endlich to a mineral from the Red Cloud mine which, without a published analysis, was thought to have the composition $(AuFe)Te + 3AgTe$. *Engineering and Mining Journal*, XVIII., p. 133, Aug. 29, 1894. On Aug. 21, 1874, F. A. Genth read a paper before the American Philosophical Society, Philadelphia, on Colorado tellurides, and used the name for a mineral to which, on the basis of two analyses, the formula $PbS,2Ag_2S,2Bi_2S_3$ was given. Dr. Genth in the published account later issued refers to Endlich's schirmerite as a mixture of petzite with pyrite or perhaps a telluride of iron, and insisted on the retention of his use of the name. This has been generally done.

Selen-tellurium, a mixture of native tellurium and selenium in nearly the ratio Se_2Te_3. E. S. Dana and H. L. Wells, *American Journal of Science*, July, 1890, p. 78.

Stützite, perhaps Ag_4Te: Te, 22.5%; Ag, 77.5%; Telluride of silver. Schrauf, *Zeitschrift für Krystallographie*, II., p. 245, 1878.

Sylvanite, $(AuAg)Te_2$: variable; if Au : Ag as 1 : 1, Te, 62.1%; Au, 24.5%; Ag, 13.4%. Telluride of gold and silver. Necker, *Le Règne Mineral ramené aux Methodes de l'histoire naturelle*, 1835.

Tapalpite, $3Ag_2(STe)Bi_2(STe)_3$; Sulpho-telluride of silver and bismuth from the Sierra de Tapalpa, Jalisco, Mexico. The composition is variable. Genth obtained: Te, 20.3%; S, 7.8%; Bi, 28.1%; Ag, 43.8% (*Proceedings American Philosophical Society*, XXIV., p. 41, 1887). The name was given by P. L. Monroy, *La Naturaleza*, I., p. 77, Mexico, 1869.

Tellur-pyrites, a name given by C. U. Shepard, Sr., to a mineral described as "Marcasite with arsenic and tellurium." *Contributions to Mineralogy*. Amherst, Mass., 1877, p. 3. The name is also used by J. Alden Smith, Biennial Report of State Geologist of Colorado, 1881, p. 71. It has no value.

Tellurite, TeO_2: Te, 79.6%; O, 20.4%; Telluric acid. Nicol, *Manual of Mineralogy*, p. 429, 1849.

Tellurium. The native tellurium usually has some gold or other element with it. Klaproth, *Beiträge zur Chemischen Kenntniss des Mineralkörpers*, III., p. 2, 1802.

Tetradymite, $Bi_2(TeS)_3$: variable: Te, 36.4%; S, 4.6%; Bi, 59%; Sulpho-telluride of bismuth. Varieties free from sulphur are known. Haidinger, *Zeitschrift für Physik und Mathematik*, IX., p. 129, 1831.

Wehrlite, formula uncertain; Sulpho-telluride of bismuth; may contain silver. Huot, *Manuel de Mineralogie*, I., p. 188, 1841.

A brief review of the above shows that Haidinger has given the greater number of the names now in use, and that the late Dr. F. A. Genth of Philadelphia has had much to do with investigating the tellurides. Many of these ores were, however, known to the miners and mineralogists by other names long before they received the ones above cited.

Tellurium thus occurs native and in composition with sulphur, selenium, bismuth, gold, lead, mercury, nickel, and silver. It yields tellurites or tellurates with bismuth, iron, and probably mercury, all of which have naturally been derived by the oxidation of the tellurides. Telluric oxide also forms a separate mineral. Of all the compounds, those with the precious metals are the most numerous and most important, and the strong affinity of tellurium for gold and silver and, we may add, for bismuth is marked. Additional significance is thus given to the researches of Dr. Richard Pearce, one of the most keen-sighted of modern students of ores, upon the condition of gold in various more or less refractory ores. Dr. Pearce's papers will be cited later on and especially under Colorado.

GENERAL GEOLOGICAL RELATIONS.

In almost all the occurrences so far studied and recorded the tellurides are found in association with eruptive rocks, and in the later developed districts of the United States with eruptive rocks of close geological similarity. The trachytes and phonolites seem to be in these camps their fairly characteristic attendants, and in the series of intrusions lying along the eastern side of the Rocky Mountains, that have resulted from outbreaks of these richly alkaline magmas, the home of many tellurides appears to be located. In the Hungarian localities somewhat parallel associations, so far as eruptive rocks are concerned, can be established, although the wall-rock is different. The characteristic associates are dacites and andesites, which were the originals of von Richthofen's greenstone trachytes or propylites, a group whose exact relations have been for years a subject of controversy among petrographers. In the recently developed Kalgoorlie district in Western Australia the tellurides are in metamorphosed basic eruptives, but in the older gold-mining districts of our Southern States, in California and in Llano Co., Texas, they are found in various metamorphic schists of origin as yet uncertain. One mine in British Columbia is in black slates with no eruptives near. It would appear, therefore, that while there are wall-rocks, which are strikingly similar and very characteristic in some widely separated regions, yet taking the world at large there is great variety. Eruptive rocks are much the most common attendants, but metamorphosed sediments are by no means unknown in these relations.

REVIEW OF THE REGIONS PRODUCTIVE OF TELLURIDES.

Hungary.—In the extreme eastern part of Hungary and on the south side of the main range of the Carpathian Mountains lies the province of Siebenbürgen or, as it is more commonly called in English, Transylvania. From the time of the Romans mining has been carried on for the precious metals, and the region has been in this respect one of the famous ones of the world. In its geological relations it is no less interesting and well known. The southern slopes of the Carpathians and the area south of them have been the scenes of igneous activity of extraordinary extent. The resulting rocks have particular interest for Americans, because it was upon them that Baron von Richthofen labored in and earlier than 1860, before he started eastward around the world, in the travels that brought him some years later to the Pacific coast. In Nevada, near the Comstock Lode, and in California, he found rocks similar to the Hungarian, and as a result the present classification of the trachytic types was in large part established and the normal succession of lavas was worked out, which elsewhere has been often found to hold good.[*] Baron von Richthofen's papers inaugurated the group of rocks, called by him propylites, that have been such a source of controversy since, but which have now been generally conceded to be varieties of andesite. It is with these as wall-rocks that we specially have to do in describing the geology of the Hungarian tellurides. The eruptive rocks are thought by von Richthofen[†] to have been poured out in the following succession: 1. Propylite, equivalent in part to the older name greenstone-trachyte; 2. Andesite; 3. Trachyte; 4. Rhyolite; 5. Basalt. In our Western States the same succession was described, and the significant point is that the earliest eruptions are rocks of medium percentages in silica; the next following are successively more and more siliceous through rhyolite, after which there is an abrupt change, and the most basic of all, basalt, closes the eruptive activity. In Hungary the ores are associated with the so-called propylite or greenstone-trachyte, and are either in it or in the neighboring sedimentaries.

Tellurides are known to occur in a number of the mining regions, but those of the precious metals are most abundant and important at Nagyág and Offenbánya, to which two districts the subsequent descriptions will be limited.

Nagyág.—Nagyág[‡] is a small mining town in a wild gorge a few miles distant from the Maros River. The sedimentary rocks exposed are chiefly Miocene red clays, sandstones, conglomerates, and limestones. They are pierced by the propylite or greenstone-trachyte of von Richthofen, now regarded as dacite, and the eruptive rocks have torn off and included great masses of the sedimentaries, without, however, producing much in the way of contact metamorphism, except that in the eruptives there is a special abundance of white feldspar crystals and of

---

[*] See F. v. Richthofen, "The Natural System of Classification of the Volcanic Rocks," *Memoirs of the California Academy of Sciences*, Vol. I., p. 39, 1868. The paper was afterward translated into German, and will be found in the *Zeitschrift der deutschen Geologischen Gesellschaft*, 1868, p. 663.

[†] F. v. Richthofen, *Jahrbuch der Königlichen, Kaiserlichen Geologischen Reichsanstalt*, 1860, XI., p. 153.

[‡] B. v. Cotta, *Die Lehre von den Erzlagerstätten*, Zweiter Theil, 1861, p. 272. A bibliography of earlier papers is appended. See also F. v. Hingenau below.

—— "Ueber die Erzlagerstätten von Nagyág in Siebenbürgen," *Berg- und Hüttenmännische Zeitung*, 1861, 190.

—— "Erzlagerstätten Ungarns und Siebenbürgens, 1862." This was issued in the magazine *Gangstudien*, IV., 1, but the parts relating to Nagyág and Offenbánya are the same as the citations from the *Berg- und Hütt.-Zeitung.*

A. v. Groddeck, *Die Lehre von den Lagerstätten der Erze*, p. 163, 1870. A special type is made of Nagyág, viz.: "Typus Nagyág. Characteristics, Gold-quartz veins, containing quartz, pyrite, and native gold, and here and there a great variety of minerals, among which tellurium compounds are especially characteristic. They occur in massive rocks, and principally in Tertiary greenstone-trachyte, but also in granite, felsite-porphyry, diorite, etc. Through the presence of silver ores a transition to the next type (Schemnitz) is developed."

F. v. Hauer und G. Stache, *Geologie Siebenbürgens*, p. 553, 1862.

Frh. v. Hingenau. Nagyág, geognostischbergmännische Skizze des Bergamtes, und seiner nächsten Umgebung, *Jahrbuch der k. k. Geologischen Reichsanstalt*, VIII., p. 82, 1857.

H. Hoefer, "Beiträge zur Kenntniss der Trachyte und der Erzniederlage zu Nagyág in Siebenbürgen," *Jahrbuch der k. k. g. Reichsanstalt*, XVI., 1, 1866. The paper gives a bibliography.

Bela von Inkey, *Nagyág und seine Erzlagerstätten*, with four maps and twenty-three figures. In Hungarian and German. Budapest, 1885. This is the completest description published, and a valuable though not readily accessible work.

F. Posepny, "Zur Geologie des Siebenbürgischen Erzgebirges," *Jahrbuch der k. k. g. Reichsanstalt*, XVIII. 53, 1868.

E. Priwoznik, "Ueber Vorkommen von Tellur, und dessen Gewinnung aus seinen Erzen," *Monographien des Museums für Geschichte der Oesterr. Arbeit*, Vienna, 1898.

F. Fr. von Richthofen, "Studien aus den Ungarisch-Siebenbürgischen Trachytgebirgen," *Jahrbuch der k. k. g. Reichsanstalt*, XI., 1860.

R. Scharizer, "Ueber Goldsilbertellur, Krennerit aus Nagyág," *Idem*, XXX., 604, 1880.

A. Schrauf, "Ueber die Tellurerze Siebenbürgens," *Zeitschrift für Krystallographie*, 1878, 209.

cracks near the contacts. Both the included fragments and the inclosing eruptives are cut by later dikes or veins of an obscure rock, locally called "Klaug" or "Glauch," but the dikes are so charged with inclusions of shale as to be called by v. Cotta a shale breccia. The dikes vary from a few millimeters to a meter thick and run parallel with many of the veins, whose immediate walls on one or both sides they supply. They have apparently exercised a favorable influence on the veins, at least in furnishing an easy line for the circulation of ore-bearing solutions.

The Glauch has proved a hard rock to interpret. Von Cotta frankly described it as one of the most remarkable things he had ever seen, and gave it up. Hoefer regarded it as an intruded igneous rock, a sort of dacite filled with fragments of the walls. Posepny at first explained the dikes as due to the irruption of mud, slime, and brecciated wall-rock like a subterranean mud-volcano; just as the sandstone dikes of California and elsewhere have been explained by Diller and others. Later Posepny favored the conception of attrition veins into which mud had washed from above. Tietze also favored their explanation as attrition veins. Von Inkey, from whom the above résumé has been largely taken, argues strongly for their origin by the irruption of mud and brecciated wall-rock into the fissures, in connection with the fracturing of the country. He shows the Glauch to be a dense, dark-gray or black rock, which, aside from the included breccia, is formed of quartz grains and clayey matter richly impregnated with pyrite.*

The greenstone-trachyte (propylite) of von Richthofen, or dacite of the other observers, is a porphyritic rock in which the phenocrysts or large crystals are in considerable abundance and the ground-mass consists entirely of small, crystallized minerals, any unindividualized glass being rare, if present at all. It exhibits notable variability, but if the views of Inkey † are correct, the variations are all parts of the same general intrusion. Inkey cites the rock at the peak of Haito as the same with the walls of the veins, and of it we fortunately have a description and an analysis by C. Doelter,‡ as well as one from the peak of Zuckerhut (Sugarloaf) near Nagyág.

	SiO_2.	Al_2O_3.	Fe_2O_3.	FeO.	MnO.	CaO.	MgO.	Na_2O.	K_2O.	H_2O.	Total.
I. Haito....... ...	58.01	18.19	3.40	2.89	tr.	7.55	3.01	3.92	1.39	1.60	99.96
II. Zuckerhut. ...	62.14	18.20	4.00	0.45	tr.	6.52	2.68	3.54	1.10	0.70	99.83

Analysis I. is abnormally low in silica for a dacite, and even No. II. with its higher percentage is below the usual limits of these rocks. Doelter describes the Haito rock as fine-grained, and dark brown with felsitic ground-mass. The minerals present are small plagioclases, some quartz, hornblende, and infrequently

---

* See v. Inkey's paper as cited earlier, pp. 146-151. Several figures showing the relations of the veins to the Glauch are given.

† G. vom Rath in an account of his travels in the region quotes at length the views of von Inkey, who, as a mining official, conducted him around. See *Sitzungsberichte der Niederrheinischen Gesellschaft in Bonn*, 1879, 117. It is well to add that the *Sitzungsberichte* are published as a part of the *Verhandlungen des naturhistorischen Vereines der preussischen Rheinlände und Westphalens*, and are bound in with them as a rule. Unless this fact is appreciated they are difficult to locate for references.

‡ C. Doelter, "Zur Kenntniss der quarzführenden Andesite in Siebenbürgen und Ungarn," *Tschermaks Mineralogische und Petrographische Mittheilungen*, 1873, 79, 95. Several other analyses are quoted by Zirkel from this region in Volume VI. of the *Reports of the Fortieth Parallel Survey*, p. 187. They do not, however, form the wall-rock of the tellurides.

biotite. With the microscope sanidine, rare augite, and magnetite can be recognized. The Zuckerhut specimen has relatively little ground-mass. Abundant quartz, andesine, hornblende, and mica are visible, while with the microscope sanidine, augite, magnetite, apatite, and some glass can also be detected.

The veins form a complex network in the eruptives, and strike north and south or northwest and southeast. They have steep dips, and vary from a few inches or even less up to 5 or 6 ft. They are richest in wall-rock of moderate hardness, and are less rich in the hardest varieties. In the soft walls so much country rock is mixed in with the vein matter as to debase it. They pierce propylite, included sedimentaries and "Glauch," all three, but run out toward the border of the propylite, with which they seem to be intimately connected.

The gangue minerals are rhodochrosite, siderite, calcite, chert, quartz, and occasionally gypsum. The metallic minerals are nagyágite, sylvanite, hessite, native tellurium, gold, alabandite, pyrite, chalcopyrite, bournonite, galena, stibnite, jamesonite, zinc-blende, realgar, auripigment, and tetrahedrite. In the propylite the nagyágite, alabandite, and rhodochrosite occur, along with subordinate galena, zinc-blende, silver-bearing tetrahedrite, and quartz; but in the inclusions of conglomerate, sylvanite, quartz, and copper-bearing tetrahedrite. Breithaupt identified the following order of formation in the veins with tellurides: 1. Quartz; 2. Tellurides; 3. Blende, when present; 4. Rhodochrosite, when present; 5. Quartz, when present. Debreczényi, an early writer, cited three series of veins, viz., 1. telluride series; 2. a gold series; 3. a lead series; but von Cotta questions whether they can be sharply discriminated. Hoefer adopts a grouping practically the same as Debreczényi. Von Inkey makes the following five groups of minerals: 1. quartz, always the oldest mineral, but sometimes later repeated; 2. the greater number of the sulphides, viz., alabandite, galena, zinc-blende, tetrahedrite, pyrrhotite, pyrite, chalcopyrite, and sometimes bournonite, all formed in practically this order; 3. tellurides and native precious metals; 4. carbonates; 5. secondary minerals, stibnite, native arsenic, barite, gypsum, realgar, sulphur, and numerous rarer ones.

Von Inkey classifies the veins into: 1. the quartz-telluride series; 2. the spar-telluride series; 3. the copper-ore series. The veins have been observed to pinch out both above and in depth, but when persistent, no decrease in value in depth has been met as far as the mining has progressed.

Offenbánya lies south of Klausenburg, one of the larger towns of Transylvania. The local geology varies considerably from that at Nagyág. Mica-schists with subordinate crystalline limestones and slates are intruded by a great dike of pyritous greenstone porphyry, or propylite, which strikes northwest and southeast. It is crossed by a series of narrow fissures, ranging about an inch in width, called "Tellurklüfte," and striking east and west with a dip of 40° to the north, near the Franzisci shaft, according to v. Cotta. Posepny, however, describes them as having a prevailing northeasterly strike, the same as the dike, but mentions other subordinate ones that run northwest. The telluride fissures yield native gold and sylvanite, and, as at Nagyág, are richest in the moderately firm rock, but are leaner in the very hard or very soft propylite. They are crossed by a series of pyritous quartz veins which have enriched them. In the limestone and around masses of porphyry two great beds of sulphides have been met that lack the tellurides, although tapped by the same shafts. Von Groddeck mentions as occurring with the tellurides, quartz, calcite, siderite, rhodochrosite, pyrite, zinc-blende, alabandite, tetrahedrite, galena, native silver, and ruby-silver ore, but at the conclusion of the paper on Nagyág in the *Berg und Huettenmännische Zeitung*, earlier cited, von Cotta, in contrasting Nagyág and Offenbánya, states that the telluride veins are much alike in each, although the veins of the former are larger and have rhodochrosite, siderite, and quartz, which fail at Offenbánya.[*]

TELLURIDES IN THE UNITED STATES.

Tellurides of the precious metals or of base metals associated with ores of the precious metals have been found in a considerable number of American localities. The list embraces the southern Appalachian gold belt, Texas, the Black Hills of South Dakota, Colorado, Montana, Idaho, Arizona, Utah, and California. They were first recognized in gold ores from Virginia, and subsequently in several other southern States. California was the next locality, and then Boulder County, Colorado, after which came the others. It will be most convenient for purposes of reference to review them in alphabetical order.

Appalachian Belt.—Tellurides have been met in a considerable number of localities in Virginia, North Carolina, and Georgia, in the gold-mining operations carried on in these States. The first discovery of an American mineral containing tellurium was made in 1848 by Dr. C. T. Jackson,[†] and was announced before the American Academy of Arts and Sciences, May 30, 1848. Dr. Jackson subsequently described the mineral as a telluret of lead and gold or foliated tellurium ore. It came from the Whitehall mine, in Spotsylvania County, near Fredericksburg, Va.[‡] Coleman Fisher[§] obtained some of the mineral the next year from Fluvanna County, and by analysis proved it to contain bismuth instead of lead, and announced the presence of selenium, a determination afterward disproved by Dr. Genth.[‖] C. T. Jackson[¶] recognized the mineral as tetradymite in 1850, and stated that it occurred in mica slate, incrusted with yellow oxide of bismuth and inclosed gold in its folia, and that it also appeared in quartz veins, always associated with gold. Nearly 20 years later, H. Credner speaks of the "Tellurium" mine of this Virginia locality as based on a vein 10 in. to 5 ft. wide, of "sandy quartz, with oxide of iron, iron pyrites, and coatings of tellurium and gold." In the next few years tetradymite was announced from several localities in North Carolina and Georgia, as the citations given below indicate. It is generally found in the quartz veins, but C. U. Shepard described it in 1859 as forming seams in

---

[*] B. von Cotta, "Ueber die Erzlagerstätten von Offenbánya in Siebenbürgen," *Berg- und Huettenmännische Zeitung*, 1861, 155.

See also references under Nagyág.

C. Doelter, "Aus dem Siebenbürgischen Erzgebirge," *Jahrbuch d. k. k. Geol. Reichsanstalt*, XXIV., 7, 1874. A geological map of Offenbánya is given: Plate I.

A. von Groddeck, *Die Lehre von den Lagerstätten der Erze.*

F. Posepny, "Ueber den inneren Bau der Offenbányaer *Bergbaugegend*," *Verhandlungen der k. k. Geol. Reichsanstalt*, 1875, 70.

[†] For this historical review the writer is almost entirely indebted to the paper by F. A. Genth entitled "Contributions to Mineralogy," VII., *Amer. Jour. Sci.*, May, 1868, p. 306, but the present review is somewhat fuller in geological details than is that of Dr. Genth.

[‡] C. T. Jackson, "Discovery of Tellurium in Virginia," *Amer. Jour. Sci.*, 1848, VI., 188.

[§] Coleman Fisher, "Examination of Telluret of Bismuth from Virginia," *Idem*, 1849, VII., 282.

[‖] F. A. Genth, *Idem*, 1855, XIX., 15.

[¶] C. T. Jackson, *Idem*, 1850, X., 78.

hornblende gneiss, with gold, in the middle of the Chestatee River, four miles east of Dahlonega, Ga., and also in white calcite. At King's Mountain, N. C., the ore has been obtained from large lenticular chimneys of siliceous dolomite. The chimneys are separated by black, graphitic slate, carrying coarse pyrites, which is not auriferous (Nitze and Hanna). The gold is largely present in the free state, but is also associated with pyrites, chalcopyrite, and galena. Devereux states that nagyágite and altaite are occasionally met, and that they are good indicators of rich ore. The general country rocks in which the slates and ore chimneys occur are schists and gneisses. From the Reynolds mine, Montgomery County, sylvanite has been reported by E. Emmons; montanite by Genth from Becks mine, Davidson County, and Mills mine, Burke County.

In résumé of the tellurides in the southern Appalachians it may be said that they are rare minerals, but that they occur in the same general relations as the gold. The latter has a very wide range of associates, and none very distinctive can be established for the tellurides.[*]

S. F. Emmons[†] records the determination of a steel-gray mineral from the gold-quartz veins near Great Falls, Maryland, a small town 15 miles or more west of Washington. Many veins are known in the neighborhood which have been the objects of some small mining ventures, now discontinued. They occur in the usual schists of the Appalachian belt.

---

[*] BIBLIOGRAPHY.—In preparing the following list Dr. G. F. Becker's paper has been extensively used, as it contains a fairly full series of citations on the Southern gold ores. A few additional ones have been added.

General Papers.—G. F. Becker, "Gold Fields of the Southern Appalachians," *XVI Annual Report, Director U. S. Geol. Survey*, Part III., p. 274, especially pp. 274–278.

Burkart, "Ueber das Vorkommen verschiedener Tellur-Minerale in den Vereinigten Staaten von Nord-Amerika," *Neues Jahrbuch*, 1873, p. 491. A general review of the occurrences recorded up to 1873, and of the literature. The paper gives an excellent summary.

H. B. C. Nitze and H. A. G. Wilkens, "The Present Condition of Gold Mining in the Southern Appalachians," *Trans. Amer. Inst. Min. Eng.*, XXV., pp. 661, 1016–1021, 1025.

GEORGIA.

Geo. Little, *Mineralogical, Geological, and Physical Survey of Georgia*, 1874, p. 19, and 1875, p. 10.

C. U. Shepard, "On Lazulite, Pyrophyllite, and Tetradymite in Georgia," *Amer. Jour. Sci.*, 1859, XXVII., p. 36.

NORTH CAROLINA.

W. B. Devereux, "Gold and its Associated Minerals at King's Mountain," *Engineering and Mining Journal*, 1881, XXXI., p. 39.

E. Emmons, *Report on the Midland Counties of North Carolina*, 1856.

F. A. Genth, "Tetradymite from Davidson Co., N. C.," *American Jour. Sci.*, 1853, XVI., p. 81. "Near Washington Mine," *Idem*, 1855, XIX., p. 15. "A Few Observations on the Occurrence of Gold," *Idem*, 1859, XXVIII., p. 255. "Historical Sketch," *Idem*, 1868, XLV., p. 305. "Mineral Resources of North Carolina," *Journal of the Franklin Institute*, Nov., Dec., 1871. Reprint, p. 5. "Minerals and Mineral Localities of North Carolina" (with W. C. Kerr), pp. 25, 27, 84, Raleigh, 1885, Chapter I. of Vol. II., Kerr's *Report on Geology of North Carolina*. Chapter I. was reprinted in 1885. An earlier form appeared in 1871 as Appendix C to Kerr's Report of that year. "The Minerals of North Carolina," *Bulletin 74, U. S. Geol. Survey*, 1891, pp. 22, 23, 26, 82.

W. C. Kerr and F. A. Genth. See Genth.

W. C. Kerr and G. B. Hanna, *Ores of North Carolina*, 1893, p. 234.

H. B. C. Nitze and G. B. Hanna, "Gold Deposits of North Carolina," *Bull. 3, N. C. Geol. Survey*, 1896, p. 146.

C. U. Shepard, *Report on the Gold Hill Mine, Rowan County*, 1852.

VIRGINIA.

H. Credner, "Report of Explorations in the Gold Fields of Virginia and North Carolina," *American Journal of Mining* (now the *Engineering and Mining Journal*), VI., p. 406, 1868–69.

Coleman Fisher, "Examination of a Telluret of Bismuth from Virginia," *Amer. Jour. Sci.*, 1849, VII., p. 282.

F. A. Genth, *Idem*, 1853, XIX., p. 15.

C. T. Jackson, *Proceedings Amer. Acad. Arts and Sciences*, II., p. 2, 1848. "Discovery of Tellurium in Virginia," *Amer. Jour. Sci.*, 1848, VI., 188. "On Telluret of Bismuth from Virginia," 1850, X., 78.

[†] S. F. Emmons, "Gold Deposits of Montgomery County, Md.," *Trans. Amer. Inst. Min. Eng.*, XVIII., p. 407, 1890.

Arizona.—F. A. Genth has reported tetradymite from a point two miles south of Bradshaw City, Yavapai County, Arizona. "It occurs in crystalline masses, implanted in imperfectly crystallized, slightly ferruginous quartz, associated with pyrite."[*] W. F. Hillebrand[†] has described a new ferric tellurite, that he has named emmonsite, from material brought by R. C. Hills from the neighborhood of Tombstone. The exact locality and the geological relations are not recorded.

Prof. J. J. Stevenson has placed in the writer's hands a specimen of a telluride, belonging to the geological collections of New York University, which came from Groom Creek, near Prescott. It gives excellent tests for tellurium, is a silvery white mineral, in very narrow veinlets, in a compact bluish quartz gangue. It contains no bismuth, and is probably a telluride of gold.

California.—Tellurium ores were early discovered in California, as W. P. Blake[‡] recorded them in 1857. The first case was a telluret of silver, probably hessite, which was washed out of the gravels near Georgetown, El Dorado County. Eight years later, in 1865, C. A. Stetefeldt[§] contributed a paper on the "Reduction of Telluric Gold and Silver Ores" to a pamphlet on the *New Melones Gold and Silver Mines.* Stetefeldt, as quoted by Genth, states: "The samples of ore from the Stanislaus mine contain large quantities of sylvanite or graphite tellurium[‖] of steel-gray color and metallic luster, by far the richest tellurium ore, and smaller quantities of the tellurium of lead, recognizable by its tin-white color and greater luster." (*American Journal of Science*, May, 1868, 307.) In the same year Guido Küstel[¶] described the principal ore of the Melones mine as "tellurite of silver-gold," which he thought was a new species. The year following[**] he states that he had found no sylvanite nor telluride of lead, but besides the ore above mentioned, telluride of silver, native tellurium, copper-nickel, pyrites, and free gold. A catalogue of California minerals prepared by W. P. Blake in March, 1866, appears in J. Ross Brown's *Mineral Resources West of the Rocky Mountains*, 1867. Blake mentions gold associated with tellurium (p. 210) and telluret of silver (p. 209). He cites the Stanislaus and Melones mines. F. A. Genth announced before the Philadelphia Academy of Sciences, Aug. 6, 1867, the occurrence of a new mineral, a telluride of nickel, at the Melones mine. A specimen from the Stanislaus mine was afterwards analyzed and named melonite.[††] In this same paper calaverite was also first named and described, the original specimen coming from the Stanislaus mine (p. 314). Dec. 2, 1867, Prof. B. Silliman announced to the California Academy of Sciences the presence of tellurium ores at three new localities, as follows:[‡‡] "The Golden Rule mine, on

---

[*] F. A. Genth. "Contributions to Mineralogy," No. 48, *Amer. Jour. Sci.*, Aug., 1890, 114.

[†] W. F. Hillebrand, "Emmonsite, a Ferric Tellurite," *Proc. Colo. Sci. Soc.*, II., 20, 1885; *Amer. Jour. Sci.*, July, 1890, 81.

[‡] *Geological Reconnaissance of California*, 302. "Note on a Telluret of Silver in California," *Amer. Jour. Sci.*, XXIII., p. 270, 1857. For the early references in this review of California tellurides the writer is indebted specially to the paper by F. A. Genth, in the *Amer. Jour. Sci.*, May, 1868, p. 307.

[§] An abstract appears in the *Berg- und Hütt. Zeitung*, Oct. 30, 1865, p. 374.

[‖] This determination of the mineral as graphite tellurium (meaning graphic tellurium, sylvanite, or Schrifterz) is stated by E. Döll to be an error. *Tschermak's Mineralogische und Petrograph. Mittheilungen*, 1874, p. 91. Döll merely makes the statement without particulars.

[¶] Guido Küstel, *Mining and Scientific Press*, San Francisco, May 20, 1865.

[**] Guido Küstel, *Berg- und Hütt. Zeitung*, 1866, p. 128. Küstel's determination of native tellurium was afterwards pronounced erroneous by E. Döll. *Tschermak's Mineralogische und Petrog. Mittheilungen*, 1874, p. 91.

[††] F. A. Genth, *Amer. Jour. Science*, May, 1868, p. 312.

[‡‡] The passage is quoted from F. A. Genth, *Amer. Jour. Sci.*, May, 1868, p. 308.

the mother lode, near Poverty Hill, Tuolumne County, where ores similar to those of the Melones mine are found in thread-like quartz veins, crossing the cleavage of argillite; at the Raw Hide Ranche mine; and at the Reist mine on the mother lode at Whisky Hill, Tuolumne County," where he discovered a very small crystal of hessite. In one of the mines at Angel's Camp he observed foliated tellurium. F. A. Genth, in the paper from which practically all the above citations were obtained, describes petzite from the Golden Rule mine, where it occurs associated with minute quantities of altaite, gold and pyrites, with quartz and dolomite in argillaceous slate. Petzite is said to be the commonest California telluride examined up to that time. A telluride is also announced from Grass Valley, California (p. 316).

The reports of the several State mineralogists of California contain scattered references to the tellurides[*] and several new localities are cited. R. Pearce has investigated a refractory gold ore from "Old Diggings," Shasta County, and found that it contained both tellurium and bismuth.[†] W. Lindgren has contributed a very valuable paper on the gold-quartz veins of Nevada City and Grass Valley, and states[‡] that the tellurides are more common than has been suspected, although rarely in large enough quantities for mineralogical determination. Concentrates from the Idaho-Maryland mine yielded W. F. Hillebrand 0.03% Te. This vein lies in serpentine with associated diabase. From the Ural vein of the Providence mine other tellurides were recognized. The country rocks are metamorphic schist, diabase and granodiorite.

Colorado. Boulder County.—Tellurides were first announced from Colorado by A. Eilers[§] at the Pittsburg Meeting of the Institute of Mining Engineers, October, 1872. They were discovered early in the previous summer by two prospectors, who located the Red Cloud mine, at Gold Hill. The ore was forwarded to the sampling works of J. F. L. Schirmer in Denver, by whom specimens were sent to Dr. F. A. Genth in Philadelphia, before Mr. Eilers' paper was read. Dr. Genth determined the mineral to be petzite, the gold-bearing variety of hessite, as stated by Mr. Eilers, and subsequently investigated them with care, as cited later. This discovery excited great interest, and later prospecting revealed a number of other veins carrying the same sort of ores. Boulder County speedily became famous as a source of tellurides, and remained as the principal American locality until the discovery of the veins at Cripple Creek. A considerable number of papers have been written concerning the mines and minerals, as the subjoined citations will show.[‖]

---

[*] See Second Report, 1880-82, pp. 1-192. Fourth Annual Report, 1884, pp. 95, 104, 127, 137, 308, especially a letter by Z. A. Willard, p. 386, in which many new localities are cited. Sixth Annual Report, Part I., 1886, in list of California minerals. E. B. Preston on Calaveras County, *11th Annual Report*, p. 169.

[†] R. Pearce, *Trans. Amer. Inst. Min. Eng.*, XVIII., p. 451.

[‡] W. Lindgren, XVII., *Ann. Rept. Director U. S. Geol. Survey*, Part II., p. 116.

[§] A. Eilers, "A New Occurrence of the Telluride of Gold and Silver," *Transactions Amer. Inst. Min. Eng.*, I., p. 316.

[‖] Bergrath Burkart, "Ueber das Vorkommen verschiedener Tellur-Minerale in den Vereingten Staaten von Nord America," *Neues Jahrbuch*, 1873, p. 476, especially p. 492; 1874, p. 30.

Whitman Cross, "A List of Specially Noteworthy Minerals of Colorado," *Proc. Col. Sci. Soc.*, I., p. 134, 1884, cites Tellurium, Melonite, Altaite, Hessite, Coloradorite, Sylvanite, Tellurite.

A. Eilers, "A New Occurrence of the Telluride of Gold and Silver," *Trans. Amer. Inst. Min. Eng.*, I., p. 316, 1872. Red Cloud Mine.

S. F. Emmons, "Sketch of Boulder County," *Tenth Census*, Vol. XIII., p. 64, 1885.

The Front range in Boulder County consists mainly of granite, with gneissoid foliation, forming the granite-gneiss of the geologists of the Fortieth Parallel Survey. Although regarded by some as a metamorphosed sediment, it is more probably a dynamically metamorphosed plutonic rock. The following description, quoted from Emmons' paper as cited below, gives a good idea of its mineralogy: "At times this gneiss is coarsely crystalline, at others fine-grained, in which case the proportions of hornblende and biotite are relatively greater and the rock assumes a darker color. Quartz is always prominent in it. In the coarse rock two feldspars are visible—an orthoclase feldspar, generally of a delicate pink tinge, and a white opaque feldspar, which is triclinic and frequently shows the characteristic striation on the basal cleavage faces. In a specimen from the eastern base of Sugar Loaf examined microscopically, plagioclase feldspar is largely predominant and is of two varieties, one probably oligoclase and the other labradorite. Magnetite, apatite, and pale zircons are sparingly present." This description will apply with fair accuracy to the gneisses generally present in the Front range, and most observers familiar with dynamically metamorphosed plutonic rocks would conclude that a great igneous complex was the original of them, of prevailing granitic and dioritic nature. The metamorphism manifestly took place before the intrusion of the porphyry dikes to which reference will be made below. Some mica schist is also present and in one case forms the wall-rock of an ore-body.

Dikes of various porphyritic rocks are a prominent feature of Boulder County, but are stated by Emmons to be very rare in the telluride belt. West of the telluride region enormous masses of eruptives are known. Still several of the telluride veins are associated with dikes, as will later appear, and the ores are described by Richard Pearce as chiefly decomposed porphyry impregnated with

---

F. M. Endlich, "Tellurium Ores of Colorado," *Engineering and Mining Journal*, XVIII., p. 133, 1874.

F. M. Endlich, "Minerals of Colorado Territory," *Hayden's Survey*, 1873, p. 352.

J. B. Farish, "Interesting Vein Phenomena in Boulder County, Colo." (Golden Age Mine), *Trans. Amer. Inst. Min. Eng.*, XIX., p. 541, 1890.

J. B. Farish, "A Boulder Co. Mine" (The Golden Age and Sentinel), *Proc. Colo. Sci. Soc.*, III., p. 316, 1890. (Same as above.)

F. A. Genth, "On Tellurides from Red Cloud and Uncle Sam Lodes," *Proc. Amer. Phil. Soc.*, XIV., p. 225, 1874.

F. A. Genth, "Tellurides from Keystone, Mountain Lion, and John Jay Mines," *Idem*, XVII., p. 115, 1877.

J. K. Hallowell, *Boulder County as It Is*, Denver, 1882. Worthless.

N. P. Hill announces "Tellurides at Red Cloud Mine," *Amer. Jour. Sci.*, V., p. 387, May, 1873.

W. F. Hillebrand, "Melonite. Forlorn Hope Mine, Boulder County," *Proc. Colo. Sci. Soc.*, I., p. 123, 1884.

E. P. Jennings, "Analyses of some Tellurium Minerals" (Native Tellurium from John Jay Mine; Sylvanite, Smuggler Mine), *Trans. Amer. Inst. Min. Eng.*, VI., p. 506, 1877.

A. Lakes, On Boulder County, *Geology of Colorado Ore Deposits*, c. 1888.

A. R. Marvin, "Metamorphic Crystalline Rocks of the Front Range," *Hayden's Survey*, 1873. "On Boulder County," pp. 144, 147–152, 685, Map. *Engineering and Mining Journal*, XVIII., p. 129, 1874.

C. S. Palmer, "Eruptive Rocks of Boulder County, Colorado," *Proc. Col. Sci. Soc.*, III., p. 230, 1889.

C. S. Palmer and Henry Fulton, "The Quartz Prophyry of Flagstaff Hill, Boulder, Col.," *Idem*, p. 351, 1890.

R. Pearce, "Remarks on Gold Ores of Rocky Mountains," *Proc. Col. Sci. Soc.*, III., p. 239, 1889.

R. Pearce, In discussion of paper by P. H. van Diest, *Proc. Col. Sci. Soc.*, IV., p. 349, 1893.

B. Silliman, "Mineralogical Notes, Tellurium Ores in Colorado," *Amer. Jour. Sci.*, July, 1874, pp. 25, 33. Reprinted in *Hayden's Report*, 1873, p. 688.

J. Alden Smith, quoted by P. H. van Diest as mentioning Boulder County Mines in his *Biennial Report* for 1880.

P. H. van Diest, "Notes on Some Boulder County Veins," *Proc. Colo. Sci. Soc.*, II., p. 50, 1886.

P. H. van Diest, "The Mineral Resources of Boulder County, Colo.," *Biennial Rep. State School of Mines*, 1886, p. 25.

P. H. van Diest, "Evidence Bearing on the Formation of Ore Deposits by Lateral Secretion. The John Jay Mine at Boulder County, Colo.," *Proc. Col. Sci. Soc.*, IV., p. 340, 1893.

tellurides. Emmons mentions a porphyritic rock from Sugar Loaf Mountain, in the telluride belt, showing small, white, indeterminable feldspars, biotite, hornblende, and titanite. Orthoclase porphyry occurs on the north bank of Four-Mile Creek and forms a large mass. At Jamestown quartz-porphyry constitutes a cliff 500 ft. high. It yields on analysis 67% silica. Quartz-diorite also occurs near the same town. Porphyry dikes are recorded by others at the Red Cloud mine near Gold Hill, which was the first discovery of tellurides, and in the Golden Age near Jamestown. Brief reference to the eruptives is made by C. S. Palmer, who gives an analysis of a quartz-porphyry from Flagstaff Hill near the town of Boulder, and east of the telluride belt. Another runs from the foot-hills six or eight miles toward Sunshine, a telluride camp. Palmer's papers give the impression that the eruptives are more important and abundant than would be inferred from Emmons' description.

Pegmatite dikes or veins are a prominent feature in the telluride belt and present both coarse and fine-grained varieties. They are cut by the veins and are of earlier date.

As regards the general structural geology, P. H. van Diest has described several folds in the crystallines as follows:

A main north-and-south one along the continental divide on the western border of the county; two principal east-and-west ones pitching eastward from the main one; two other subordinate ones between the latter, and having the telluride veins on their flanks. One of them pitches south from Ballarat to Jamestown, the other pitches north from Sugar Loaf toward Gold Hill. If, however, the rocks are squeezed plutonics, the significance of the folds is somewhat less than if the foliation is thought to represent bedding.

The tellurides are rather sharply limited to a belt extending 12 or 13 miles from Magnolia on the south to Ballarat on the north, and five miles in width, from Providence and Gold Hill on the west, eastward toward the plains. West and southwest of these limits the ores change entirely in character and no more tellurides are met. Even within the telluride area some veins lack this mineral, and at the Golden Age and Sentinel mines, as described by J. B. Farish, an older vein, in the former mine, containing free gold is cut and slightly faulted by a later one worked in the latter mine and containing tellurides.

The veins are associated with the dikes of porphyritic rock to such an extent that, as stated above, Richard Pearce describes the usual ore of the telluride belt as principally altered porphyry more or less replaced by quartz. The quartz is chiefly a finely crystalline bluish variety. Fluorite, just as at Cripple Creek, in the Black Hills, and elsewhere, often accompanies the ores, and pyrites, galena, blende, and tetrahedrite are met. Dolomite is also known. The outcrop of several veins is on or near the contact of a porphyry dike and the gneiss. Thus the first mine discovered, the Red Cloud, is on one side of a dike 30 to 40 ft. wide, and the Cold Spring is on the other side. The Golden Age follows down along a dike, with cross-cuts into the neighboring country rock, and the Sentinel crosses both it and the dike. The John Jay outcrops at the surface between two pegmatite dikes, and cuts one of them in depth. Other ore-bodies, however, lie within the gneiss entirely and form irregular, forking veins, which pinch out in very troublesome ways. The Smuggler, the most northerly of all, is in mica schist. It does not therefore seem that there is always a necessary connection between the dikes and the ore, for the Golden Age vein is later than the dike and older than the Sentinel tellurides, yet itself so far as observed has no tellurium. Still, we do not know how the several intrusions of the dike rocks are related to one another in time. It is uncertain whether there is more than one series or not. A derivation of the tellurides and associated minerals by lateral secretion has been advocated by P. H. van Diest in his paper on the John Jay, but others have felt the greater claims of rising solutions, despite the pockety nature of the veins.

A considerable list of authentic species has been reported, especially by Dr. F. A. Genth, whose papers give the completest details. A good list is in the citation by S. F. Emmons. The following have been noted; not all are recognized as good species by the mineralogists, and the fact is indicated by the interrogation-point after the questionable ones; for particulars the list of minerals containing tellurium at the outset of this paper may be consulted; the minerals originally described from Boulder County are italicized:

Altaite, Calaverite ?, *Coloradoite*, *Ferro-tellurite*, *Henryite ?*, Hessite, *Lionite ?*, *Magnolite*, *Melonite*, Petzite?, *Schirmerite ?*, Sylvanite, *Tellure-pyrite ?*, Tellurite, Tellurium.

The mining districts within the telluride belt are the Central, the Gold Hill, the Sunshine, the Sugar Loaf, and the Magnolia.

Clear Creek County.—But one case of a telluride has been recorded in the silver-bearing galena and gray copper veins of this county. C. A. Martine of Georgetown detected tellurium in a mineral which was associated in small quantities with pyrite, galena and chalcopyrite in a feldspathic matrix containing a little magnesite. Richard Pearce* subsequently described it with an analysis by F. C. Knight, as follows: Ag, 50.65%; Te, 18.80%; Pb, 9.34%; Cu, 4.65%; Fe, 4.00%; Bi, 1.16%; S, 8.06%; $MgCO_3$, 1.95%; alloy of Au and Ag, 0.48%; insoluble residue, 1.07%; total, 100.16%. The mineral is interpreted as a mixture of hessite and argentite with chalcopyrite, galenite, bismuth sulphide, an alloy of gold and silver, magnesite and insoluble matter. The geological formations in Clear Creek County are much the same as those in Boulder.

Custer County.—The Bassick mine, one of the most famous and interesting of American ore-bodies, is the one source of tellurides in this county. The ore is found coating the boulders of a volcanic agglomerate that fills an old crater tube or volcanic conduit. The conduit seems to have been the scene of explosive outbreaks only, and as nearly as can be determined possessed an elliptical cross-section with diameters of about 1500x1000 ft. The boulders are greatly decomposed andesite in most cases, but gneiss is also met and even charred wood. The chief ore-body occupies an elliptical chimney or huge and nearly vertical tube, 100x20 to 30 ft., which has been developed to 1400 ft. in depth and still shows ore. One hundred and fifty feet east of the main shoot another was opened from the seventh level downward. These details are taken from the papers of Graybill, Cross, and Emmons.

The ore coats the boulders in several layers, of which a maximum of five were identified by Graybill. The innermost was a thin layer of the sulphides of zinc,

---

* Richard Pearce, "Notes on the Occurrence of a Rich Silver and Gold Mineral containing Tellurium in the Griffith Lode, near Georgetown, Clear Creek County, Colo.," *Proc. Colo. Sci. Soc.*, Oct. 5, 1896.

antimony, and lead, and yielded 60 oz. silver and 1 to 3 oz. gold. The next had a lighter color and contained more lead, silver, and gold; yielding 150 to 200 oz. silver and 100 oz. gold. The third was a shell of sphalerite, with some iron and copper. It ranged from 5 mm. (⅕ in.) to 5 cm. (2 in.) and carried 60 to 120 oz. silver and 15 to 50 oz. gold. It was the chief ore. The fourth crust was variable and chiefly chalcopyrite, 1 to 2 cm. (⅖ to ⅘ in.) and yielded 50 to 100 oz. silver and 50 to 100 oz. gold. The fifth coat was rare and only a thin layer of pyrite crystals. In addition calamine, smithsonite, and free gold occurred in the gossan. Jamesonite, galenite, tetrahedrite, and tellurides of gold and silver were also identified. The last-named seemed limited to the interstices between the incrusted boulders. C. E. Wait of Rolla, Mo., made two determinations of tellurium on this variety of ore, finding 0.05 and 0.08%. F. C. Knight, however, analyzed a rich piece of the ore for Richard Pearce, with the following result as cited by Emmons: Gold, 1.64%; silver, 2.38%; copper, 17.43%; zinc, 18.19%; lead, 10.18%; iron, 7.96%; bismuth, 0.56%; tellurium, 2.72%; sulphur, 26.07%; arsenic, 1.90%; antimony, 10.20%; total, 99.23%. This is equivalent to 475.32 oz. gold per ton and 694.15 oz. silver. Dr. Pearce also states in the reference cited below that at the Bassick "the gold was combined, almost in its entirety, with tellurium, and rich tellurides of gold and silver were found sprinkled through the mass of the material. In some remarkable specimens these tellurides formed a distinct coating on the surface of smooth boulders." Emmons found at the time of his observations, when the mine was much deeper than when Graybill wrote of it, some different relations in the minerals and detected no tellurides. The mine has not been operated for some years.*

Eagle County.—Richard Pearce † states that hessite occurs in large quantities in one or two of the gold mines at Red Cliff. These curious bed-veins follow the bedding of a Cambrian quartzite, which dips at an angle of 10°. They occur in a brecciated and largely altered portion varying up to 6 ft. thick. In shoots through the breccia gold and silver ores are found, entirely oxidized near the surface.

El Paso County.—Cripple Creek is the one camp of importance in El Paso County. The productive mines are situated in the foot-hills of Pike's Peak, about 10 miles west of the peak itself. The general country rock of the region is the red granite of Pike's Peak. This contains masses of still older mica schists presumably caught up in its intrusion. The schists are pre-Cambrian, as are the granites, and contain diabase dikes, which occur in the streets of Cripple Creek, and on Mineral Hill, but are of no importance in connection with the ores.

---

* Whitman Cross, "Geology of the Rosita Hills, Custer County, Colo." *Proc. Colo. Sci. Soc.*, III., p. 269, 1890. "Geology of Silver Cliff and the Rosita Hills," *17th Ann. Rep. Dir. U. S. Geol. Survey*, II., p. 307, 1897.

S. F. Emmons, "The Mines of Custer County, Colo." *Idem*, p. 430, 1897. "Some Mines of Rosita and Silver Cliff," *Trans. Amer. Inst. of Min. Eng.*, XXVI., p. 773, 1896.

L. R. Graybill, "On the Peculiar Features of the Bassick Mine," *Idem*, XI., p. 110. *Eng. and Min. Jour.*, Oct. 28, 1882, p. 226.

R. Pearce, *Trans. Amer. Inst. Min. Eng.*, XVIII., p. 453, 1890.

† In the following citations Guiterman refers casually to the tellurides, and Pearce more positively:

S. F. Emmons, "Notes on Some Colorado Ore Deposits," *Proc. Colo. Sci. Soc.*, II., p. 100, 1886.

F. Guiterman, "Gold Deposits in the Quartzite Formation of Battle Mountain," *Idem*, III., p. 264, 1890.

E. E. Olcott, "Battle Mountain Mining District, Eagle County, Colo.," *Engineering and Mining Journal*, June 11, 1887, pp. 417, 436; May 21, 1892, p. 545.

Richard Pearce, "Hessite in Red Cliff Ore." *Trans. Amer. Inst. Min. Eng.*, XVIII., p. 451, 1890.

G. C. Tilden, "Mining Notes from Eagle County," *Ann. Rep. Colo. State Sch. of Mines*, p. 129, 1886.

At the close of the Eocene or in the Miocene times a small volcanic center broke out in the granite hills now lying east of the town and perhaps elsewhere. It was marked at first by explosive activity that besprinkled the neighboring region with a breccia made up of fragments of granite and andesite. Later came eruptions of several varieties of phonolite, which form many dikes associated with the ore bodies. Some minor outcrops of nepheline-syenite and syenite-porphyry are possibly deep-seated and coarsely crystalline representatives of the phonolite magma. Explosive eruptions of this phase seem also to have contributed some phonolite to later breccias. Last of all, dikes of several kinds of basalt, including nepheline-basalt, feldspar-basalt, and limburgite, closed the eruptive phenomena. The breccias, after their formation, became in many cases silicified, producing a very firm rock, and as a rule are so altered that their rock is to be recognized more by its physical texture than by its mineralogy. In areal distribution the breccias are the most prominent rocks near the mines. Next follows the granite, while through both are intruded the dikes of phonolites and basalts.

The ores are almost entirely productive of gold, for although some little silver is often with it, and although lead, zinc, and copper minerals are met in one or two mines, the former is of slight economic account, and the latter are rarities. Iron pyrites is very widespread, but it is not a great carrier of gold. The real source is the telluride of gold, calaverite, from which more or less of the native metal has been derived by oxidation in the upper parts of the veins. As announced by A. H. Chester before the New York Academy of Sciences, Feb. 21, 1898, krennerite is probably present in the Independence.

The gangue minerals are quartz, fluorite, and decomposed country rock. When the latter is granite it has lost its mica and often its quartz, leaving a cellular rock more or less impregnated with fresh or decomposed telluride. The wash of these veins has yielded some placer diggings especially on Mineral Hill.

The ore deposits are true veins, which have been formed along lines of displacement whose amount is as a rule slight. The fissures themselves are often insignificant in appearance, but the impregnation of the wall-rock with ore to a width of from one to several feet may afford very rich and valuable ore bodies. The fissures frequently follow the courses of dikes, but are clearly later than the latter because they cross them, leave them, return to them, and behave in a more or less independent way. Yet the presence of dikes is in a measure a favorable thing, because the dike itself has filled a fissure, and because it, being an offshoot from a larger body of heated rock and with lines of weakness along the contacts with its walls, doubtless has often exercised a directing influence on solutions.

The veins are not large, but they have yielded in the aggregate huge amounts of high-grade ore. As elsewhere the ores follow shoots in the veins, and the shoots approximate the vertical. Small cross-fractures have often exercised an influence upon them. The veins themselves are also often in a series of small parallel fissures, rather than in a single one, and impregnate the intervening walls.

Ore has been found in blind veins, outside the main lines of deposition, so that frequent cross-cuts are desirable to make sure of the country. The most productive section is on Battle Mountain, just above Victor. The Portland group and the famous Independence are in this hill. Bull Mountain with its spur, Bull Cliff, contains a considerable number of veins around the town of Altman. The fissure on which the Buena Vista, Lee, and Victor mines are located is one of the most extended in the district. Raven Hill, Gold Hill, Globe Hill, and various minor spurs have also yielded important bodies of ore.[*]

Gilpin County.—Richard Pearce has stated that he has observed tellurium and bismuth in nearly all the pyritiferous ores of Gilpin County.[†] The geological relations of the ores are very similar to those of Boulder County, the veins occurring along jointing planes in granite-gneiss and often with porphyry dikes associated, which may be partially replaced by ore.

Hinsdale County.—The writer is informed by his friend Mr. W. A. Akers that extensive and rich deposits of petzite were obtained in the Golden Fleece Mine, near San Cristoval Lake. At one time a mass 40x20x3 ft. of practically clean mineral was stoped. The wall-rock is described as trachyte.

Lake County.—Richard Pearce in 1889 noted crystals of tellurium that had been sublimed in kiln-roasting Leadville pyritous ores. He suspected the presence of petzite, and the following year detected tellurium in nearly all the sulphide ores from Leadville.[‡] The association of the ores with intruded sheets of porphyry in carboniferous limestone is too familiar to deserve special mention.

La Plata County.—Tellurides have been reported by H. C. Freeman [§] from the La Plata Mountains. The writer is informed by Dr. Whitman Cross that the veins occur in diorite-porphyrite and diorite.

Ouray County.—Richard Pearce [‖] has detected tellurium and bismuth in connection with the curious and rich deposits of gold near Ouray. The gold was found in quartzite, in a series of caves or similar openings. The bottoms of the caves were covered with an ocherous material containing large amounts of sesquisulphate of iron. The gold formed nuggets and wires in this material, but bismuth was detected by Dr. Pearce in well-marked quantities, and also crystals of a bismuth telluride, probably wehrlite. M. C. Ihlseng [¶] has cited the probable presence of some telluride in the "Ohio" and "1303" mines near Ironton.

San Juan County.—T. B. Comstock [**] makes a belt of veins containing tellu-

---

[*] W. P. Blake, "The Gold of Cripple Creek," *Engineering and Mining Journal*, Jan. 13, 1894.

Whitman Cross," Pike's Peak Atlas Folio of the U. S. Geological Survey."

Whitman Cross and R. A. F. Penrose, Jr., "Geology and Mining Industries of the Cripple Creek District, Colorado," *16th Ann. Rep. of the Director of the U. S. Geological Survey*, 1894-95.

W. F. Hillebrand, "Chemical Composition of Calaverite from Cripple Creek," in Cross and Penrose Rept., p. 133; "Calaverite from Cripple Creek, Colo.," *Amer. Jour. Sci.*, Aug., 1895, p. 128.

F. C. Knight, "On the Composition of the Cripple Creek Telluride," *Proc. Colo. Sci. Soc.*, Oct. 1, 1894.

H. L. McCann, "Notes on the Geology of the Gold Field of Cripple Creek, Colo.," *Science*, Jan. 19, 1894.

R. Pearce, "The Mode of Occurrence of Gold in the Ores of Cripple Creek District," *Proc. Colo. Sci. Soc.*, Jan. 8, 1894; *Eng. and Min. Jour.*, March 24, 1894. "Further Notes on Cripple Creek Ores," *Proc. Col. Sci. Soc.*, April 5, 1894.

S. L. Penfield, "On Calaverite Crystals from Cripple Creek," Cross and Penrose Rept., p. 135.

E. Skewes and H. J. Eder, "The Victor Mine, Cripple Creek, Colo.," *Eng. and Min. Jour.*, Aug. 19, 1893, p. 193.

E. Skewes, "The Ore-shoots of Cripple Creek," *Trans. Amer. Inst. Min. Eng.*, XXVI., p. 553, 1896.

George H. Stone, "The Granitic Breccias of the Cripple Creek Region," *Amer. Jour. Sci.*, Jan., 1898, p. 21.

[†] Richard Pearce, *Proceedings Colo. Sci. Soc.*, III., p. 257, 1890; *Trans. Amer. Inst. Min. Eng.*, XVIII., p. 449, 1890.

[‡] Richard Pearce, "Sublimed Tellurium," *Proc. Colo. Sci. Soc.*, III., p. 239, 1889; *Idem*, III., p. 257, 1890; *Trans. Amer. Inst. Min. Eng.*, XVIII., pp. 450, 457, 1890.

[§] H. C. Freeman, "The La Plata Mountains," *Trans. Amer. Inst. Min. Eng.*, XIII., p. 681, 1885.

[‖] Richard Pearce, "The Association of Gold with other Metals," *Trans. Amer. Inst. Min. Eng.*, XVIII., p. 453.

[¶] M. C. Ihlseng, "Review of the Mining Interests of the San Juan," *Rep. Colo. State School of Mines*, 1885, p. 48.

[**] T. B. Comstock, "Notes on the Geology and Mineralogy of San Juan County, Colo.," *Trans. Amer. Inst. Min. Eng.*, XI., pp. 188, 189, 1882.

rides the third group among the five into which he classifies the ore-deposits of the county. S. F. Emmons[*] also speaks in a general way of their presence. M. C. Ihlseng has reported the undoubted presence of tellurium ores in the Magnet mine in the Animas mining district and in an extension across Mineral Creek.[†]

Summit County.—Richard Pearce has reported the presence of tellurium with the native gold, which is found in beautiful specimens in the Ontario mine, at Breckenridge. The gold occurs in small seams at the junction of porphyry and slate. It is embedded in ocherous matter, which yielded on investigation bismuth and tellurium in well-marked quantities.[‡]

General.—In 1881 Thomas Egleston [§] read a short paper before the American Institute of Mining Engineers, announcing the presence of tellurium in black copper and pig copper from a Colorado works. The locality whence the ores were derived is not stated. The matte contained 0.12% Te; the black copper 0.093 to 0.097%; the refined copper 0.083%.

Idaho.—Mr. G. J. Bancroft informs the writer that he has observed tellurides in a prospect in the Seven Devils district. Mr. H. H. Armstead, Jr., recently in charge of the Columbia mines at Yellow Jacket, has stated to the writer that telluride of gold occurs there. The district has been described by Geo. H. Eldredge, but without mention of tellurides.[‖]

Maine.—M. E. Wadsworth [¶] has described a series of quartz veins that cut a 40-ft. dike of diabase on Seward's Island, Sullivan, Hancock County. The dike cuts indurated fine-grained argillaceous mica schist, which with the dike has an average dip of S. 35° W., with a variable strike. The veins cross the dike generally from north to south, and in some places form a network in it. Other dikes of diabase cross both dike and schists in a general parallel direction with the veins. The veinstone is quartz, together with some calcite, tremolite, and chlorite, and carries tetradymite and gold. "The tetradymite is in irregular grains and masses, showing a brilliant metallic luster, and a well-marked basal cleavage."

Montana.—The first discovery of tellurides in Montana was that of J. L. Kleinschmidt at Highland, 60 miles south of Helena, in 1867. In placer gold gray metallic scales were found containing tellurium and bismuth. They were sent by Mr. Kleinschmidt to Dr. Genth in Philadelphia, and when analyzed by him were found to be tetradymite. The grains were partly oxidized, and the oxidized portion proved to be a hydrated tellurate of bismuth, of formula not sharply determined. This was named "montanite" by Dr. Genth.[**] Three years later Mr. P. Knabe wrote Dr. Genth that he had traced the tetradymite to the parent vein, which was known as the Uncle Sam Lode. Mr. Knabe found a variety with sulphur, and another lacking this element. The former occurred in

---

[*] S. F. Emmons, "Brief Description of the County and its Mines," *Tenth Census*, XIII., p. 82, 1885.

[†] M. C. Ihlseng, "Review of the Mining Interests of the San Juan," *Ann. Rep. Colo. State School of Mines*, 1885, p. 39.

[‡] Richard Pearce, *Proc. Colo. Sci. Soc.*, I., p. 67, 1884. *Trans. Amer. Inst. Min. Eng.*, XVIII., p. 452, 1890.

[§] "Presence of Tellurium in Copper," *Trans. Amer. Inst. Min. Eng.*, X., p. 493, 1881.

[‖] G. H. Eldredge. "Geological Reconnaissance across Idaho," *XVI. Annual Report Director U. S. Geol. Survey*. 1894–95, Part II, 259.

[¶] M. E Wadsworth, "On an Occurrence of Gold in Maine," *Bull. Museum of Comp. Zoology*, VII., No. 3, 1881.

[**] F. A. Genth, "Contributions to Mineralogy," *Amer. Jour. Sci.*, May, 1868, pp. 306, 316–319.

dolomite and the latter in garnet, manifestly derived, as is shown by Mr. Knabe's description, from a contact zone between granite and dolomite.[*] A tellurate of copper and lead is also announced in the same paper as having been discovered by Mr. Knabe at the Iron Rod mine, Silver Star district. R. Pearce in 1885 announced the existence of tellurium in a large deposit of auriferous pyrites occurring at Bannack, and of nagyágite in a mass of diorite which formed one of the walls of the vein, the other wall being limestone. The ore had proved refractory in amalgamation.[†] In the same paper he surmises that the gold of the Cable mine, Montana, is the result of alteration from nagyágite. Dr. Pearce[‡] has also announced the presence of tellurium in rich gold ore from the Mayflower mine. An analysis of the soluble portion of a specimen gave 87.49 oz. Te per ton, while from the insoluble residue brilliant white crystals, apparently sylvanite, were panned out. The specimen came from near the surface, the telluride not being fully oxidized. The Mayflower is in the Tobacco Root Mountains, Madison County, between Virginia City and Pony. Details of the geological relations are not available.

Tellurides were announced in 1884 by W. M. Courtis[§] from the Judith Mountains as occurring along the contact of limestones supposed by him to be Lower Silurian and intruded porphyries. The mines were then in Maginnis County, but reorganization has since placed them in Fergus County. H. C. Freeman[‖] has given a brief account of the Ammon group, in which the geological relations are described as above, but only free gold is mentioned, the workings being evidently at the time above the ground water.

The fullest description has been written by W. H. Weed.[¶] The Judith Mountains form a range 18 miles long by 5 to 6 miles broad. They are chiefly formed by intrusions of syenite-porphyry and phonolite, which cut heavy-bedded limestones of Carboniferous age. The ores are tellurides in purple or other colored fluorite, and coat the fractured bits of limestone along the contacts with intruded sheets and dikes of the igneous rock. The parallelism with Mercur, Utah, is close.

The latest developed of the telluride localities in Montana is in the Little Rocky Mountains, a laccolitic group that rises from the plains, about 180 miles east of the main Rockies. The eruptives present are granite-porphyry, syenite-porphyry, granite-diorite-porphyry, and phonolite, all from notably rich alkaline magmas. As Weed and Pirsson remark, the association of the tellurides with phonolites affords a most striking parallel with those at Cripple Creek, with those in the Judith Mountains, Mont., and with those in the Black Hills. In all three, as well as to a certain extent in Boulder County, Colo., fluorite is an associate. In the Little Rockies the tellurides occur along a fractured zone in the porphyries, coating the shattered pieces of decomposed rock, together with

---

[*] F. A. Genth, quoting a letter from P. Knabe, *Proc. Amer. Phil. Soc.*, XIV., p. 224.

[†] R. Pearce, "Presidential Address before the Colorado Scientific Society," *Proceedings*, II., p. 2, 1885.

[‡] R. Pearce, "Notes on the Occurrence of Tellurium in an Oxidized Form in Montana," *Idem*, for Nov. 2, 1896.

[§] W. M. Courtis, "Gold in Fossiliferous Limestone in the Judith Mountains," *Engineering and Mining Journal*, June 28, 1884. p. 478.

[‖] H. C. Freeman, "The Ammon Mines, Fergus County, Mont.," *Idem*, May 4, 1895. p. 416.

[¶] W. H. Weed, "Mineral Resources of the Judith Mountains, Montana," *Engineering and Mining Journal*, May 23, 1896, p. 496.

purple fluorite and pyrite. Free gold of the spongy coppery appearance that results from tellurides is also often seen. The Gold Bug mine, near the small town of Landusky, is the only one of serious development as yet, and so far as known, permanent mining is yet to begin, even in it.[*]

The writer's friend, Mr. W. D. Thornton, informs him that tellurides were discovered some years ago in the extreme northwest corner of Montana in Flathead Co., and a camp called Sylvanite was founded. The developments do not appear to have been serious.

Much the most important source of tellurium in its commercial relations (for which an unsuspected application may some day make a market) is found in the copper ores at Butte, Mont. In the refining of the mattes very considerable quantities are obtained, especially at the Baltimore Copper Smelting and Rolling Company's works, which get their crude copper from the Anaconda Company. Dr. Edward Kellar states that all the Butte ores carry some tellurium, a considerable part of which enters the mattes. In converting the mattes to crude copper, from 2 to 70% of the Te is volatilized. The crude copper, with 99.3% Cu, 90 oz. Ag, .27 oz. Au, averages about 0.008% Te (2½ oz.). Large quantities of metallic tellurium have been produced at Baltimore and await an application in some important way. One cannot but suspect that the minute quantities of gold and tellurium may have been related in the original ore, but of course the tellurium lost in smelting must be appreciated, as practically all the gold is saved. Some of the silver may form a telluride, for no mineral compound of tellurium and copper has yet been discovered.

Oregon.—Mr. G. J. Bancroft informs the writer that tellurides occur in the Cornucopia mines, Oregon.

South Dakota.—For several years past it has been known that refractory gold ores impregnated the so-called Potsdam quartzite of the northern Black Hills; but the difficulties of treatment, whose cause was not well understood, militated against their extended development, and among mining men not personally familiar with the Hills they were overshadowed by the larger and better known deposits in the ancient schists. Mills, however, have been established of late which cope successfully with the difficulties of treatment, and have given a great impulse to their development. They were early described by Dr. F. R. Carpenter, and additional descriptions are also now available, especially from Prof. F. C. Smith, recently of the School of Mines at Rapid City. Early in 1895 Prof. Smith sent some samples of the ore to Dr. Richard Pearce,[†] of Denver, by whom the presence of tellurium was first demonstrated by analysis. Prof. Smith has discussed the treatment of such ores at length, and he and others as cited below have written of their geology.[‡]

---

[*] W. H. Weed and L. V. Pirsson, "The Geology of the Little Rocky Mountains," *Journal of Geology*, IV., p. 399, 1896, especially pp. 426–428.

[†] Richard Pearce, "Occurrence of Tellurium in Oxidized Form Associated with Gold," *Proc. Colo. Sci. Soc.*, April 1, 1895. See also H. Van F. Furman, *Trans. Amer. Inst. Min. Eng.*, XXVI., p. 1106.

[‡] F. R. Carpenter, "Ore Deposits of the Black Hills," *Trans. Amer. Inst. Min. Eng.*, XVII., p. 582, 1889. "Preliminary Report on the Geology of the Black Hills," Rapid City, 1888.

Persifor Frazer, "Notes on the Northern Black Hills of South Dakota," *Trans. Amer. Inst. Min. Eng.*, Feb., 1897.

W. P. Jenney, Discussion of F. C. Smith's paper on the "Occurrence and Behavior of Tellurium," etc., *Idem*, XXVI., p. 1103.

The impregnations of the Potsdam quartzites with tellurides and pyrites constitute a form of ore-body which differs from the others of the Black Hills. The mines, as nearly all the gold developments, are in the northern hills, and are especially abundant around Terry Peak. The Potsdam lies flat, and is penetrated rather abundantly by dikes and sheets of trachyte and phonolite. The igneous rocks sometimes contain the ore, but more often the quartzite itself forms the gangue. Alteration is, however, so complete that microscopic examination may be necessary to decide the nature of the rock. The ore in the quartzite favors the neighborhood of small, at times almost insignificant, fissures called "verticals." They seem to have directed the solutions which have deposited the valuable minerals. The quartzite has had its cement and even its grains of sand replaced by veinlets of quartz, fluor-spar, and ore. The small cracks, the ore itself, the fluorite, and the associated igneous rocks are all suggestive in the highest degree of Cripple Creek, Colo. The ore spreads sidewise into the wall-rock for considerable distances, and along the verticals is in sufficient abundance to make the mines very important sources of gold.

When unoxidized, the ores are blue, and are called "blue ores." When oxidized they are red, and are called "red ores." They are also known as "siliceous ores" and as "Potsdam ores."

Texas.—Mr. Bailey Willis of the U. S. Geological Survey, informs the writer that a telluride district has recently been developed in Llano Co., Texas, 5 to 6 miles northeast of the town of the same name. Gold has been detected as native gold and telluride in the saprolite or decomposed surface deposits, resulting from pre-Cambrian schists. The schists are extensively pierced by granite dikes. The tellurides form irregular pockety masses along brecciated zones in the schists. Shafts as yet have only reached 30 to 40 ft. in depth.

Utah.—Dr. F. A. Genth * reported in 1877 that August Raht had detected hessite with the blowpipe in the ore of the Kearsarge mine, Dry Cañon district, Tooele County. D. B. Huntley † describes the Kearsarge as based on chimneys and irregular bodies of ore in a stratum of limestone. The hanging wall is compact siliceous limestone.

The most important gold district of Utah, and one of the most productive at present in the country, is the recently developed Camp Floyd, of which Mercur is the chief town. Rich deposits of gold ores, formerly refractory, have yielded to the cyanide process, and have given a new and large lease of life to a district that was abandoned years ago after having had a short career as a silver producer.

Mercur is situated in the southern end of the Oquirrh Mountains, in a valley known as Lewiston Cañon. A thick series of Carboniferous limestones and very subordinate shales has been folded into a low anticline, whose axial crest is also folded so that the beds constitute a low dome or swell. One great stratum of limestone has been intruded by quartz porphyry, locally called the Eagle Hill

---

C. G. W. Lock, "Gold Mining and Milling in the Black Hills of Dakota," *The Mining Journal, Railway and Commercial Gazette*, London, 1895. pp. 62 and 91.

F. C. Smith, "The Occurrence and Behavior of Tellurium in Gold Ores, more particularly with reference to the Potsdam Ores of the Black Hills. South Dakota," *Trans. Amer. Inst. Min. Eng.*, XXVI., p. 485.

F. C. Smith, "The Potsdam Gold Ores of the Black Hills of South Dakota," *Idem*, July, 1897.

* F. A. Genth, *Proceedings Amer. Phil. Soc.*, XVII., p. 115, 1877.

† D. B. Huntley, "Mining Industries of Utah," *Tenth Census*, XIII., p. 453, 1885.

porphyry, which at the most productive mines has split into three thin sheets, each 150 ft. or less from its neighbor. At some time after the intrusion ore-bearing circulations percolated along the lowest sheet, and impregnated the limestone for a zone, usually 10 to 20 ft. thick, but reaching even 50 ft. or more, with silver-bearing minerals in a gangue of cherty quartz. Where mined, the silver was present in thin films of the chloride, coating fragments of the chert and limestone.

Associated metallic minerals are few. Stibnite is known and pyrite has been detected with the microscope. Carbonates of copper have also been noted. As gangue minerals, calcite and barite are next to chert in abundance. J. E. Spurr favors heated waters as the vehicles of the ore.

Long after the silver ores had been deposited, the gold veins were formed, probably as tellurides, along the contact of the next overlying sheet of porphyry. They are now found where this sheet is cut by a series of small northeast fissures in the limestone, which fissures are thought with great reason by Spurr to have been the conduits through which the ores were introduced. The gold in the oxidized ores is in some condition that is readily soluble in potassium cyanide, but it is uncertain what that state is. Realgar and occasionally cinnabar are associated with it. In the unoxidized ores pyrites is abundant, but the gold is but slightly attacked by the cyanide. It is thought to have been deposited as a telluride, because traces of tellurium have been found by analysis. The ores average about $10 per ton.

R. C. Hills,[*] in the paper cited below, explained the ores as introduced through a series of fissures which, now filled with calcite, penetrate to the shoots. J. E. Spurr,[†] however, regards the open fissures along which the shoots extend as the conduits, and favors a vaporous or fumarolic method of introduction. A laccolite of igneous rock, at some unknown point below, is suggested as the source of the vapors. Considerable interest has been directed of late to the mines.

Canada.—Tellurides of the precious metals have been known for 25 years past to exist in the gold-bearing veins of the Huronian rocks north of Lake Superior. T. S. Hunt cited them in 1873 as one of the characteristic features of this ore belt,[‡] and regarded them as of contemporaneous deposition with the strata forming the walls—a view that would find few supporters to-day. The ores were described at the same time by Robert Bell.[§] The Huronian mine, the principal if not the only source of the tellurides, was located by Peter McKellar in 1871.[‖] F. C. Smith[¶] describes the vein as varying from 4 to 2 ft. wide, in green Huronian slates, which contained much barren pyrite. The vein-filling is quartz, with a little galena, and with pyrite, chalcopyrite, argentite, hessite, sylvanite or petzite (the determination is obscure), and probably altaite. The mine lies

---

[*] R. C. Hills, "Ore Deposits of Camp Floyd District, Tooele County, Utah," *Proc. Colo. Sci. Soc.*, Aug. 6, 1894.

[†] J. E. Spurr, "Economic Geology of the Mercur Mining District, Utah. With an Introduction by S. F. Emmons," *XVI. Ann. Rep. Dir. U. S. Geol. Surv.*, II., p. 349.

[‡] T. S. Hunt, "The Geognostical History of the Metals," *Trans. Amer. Inst. Min. Eng.*, I., 331, 1873. *Engineering and Mining Journal*, XV., p. 131.

[§] Dr. Bell read a paper before the Natural History Society of Montreal, but he informs me that he is unaware whether it was published or not. See also T. M. Drown on a specimen of sylvanite from the Shebandowan gold mine, *Trans. Amer. Inst. Min. Eng.*, IV., p. 5, 1875.

[‖] "Mineral Resources of Ontario," 1890, pp. 25 and 115.

[¶] F. C. Smith, "A Proposed Method for Working Tellurides," *Trans. Amer. Inst. Min. Eng.*, XVIII., p. 439.

near Jackfish Lake, west of Port Arthur. After a brief operation the mill shut down.

British Columbia.—Through the kindness of the writer's friend, S. S. Fowler, E. M., of Nelson, the following notes on tellurides in British Columbia have been obtained; at least two species occur on the Olive Mabel Claim, Gainor Creek, Trout Lake mining division of West Kootenay. The claim is situated about 15 miles directly east of the head of the northeast arm of Upper Arrow Lake. A body of quartz about 2 ft. wide has been opened, which narrows to small dimensions at each end. It contains much siderite, some of which is decomposed, revealing considerable coarse free gold. Principally in the quartz, but to some extent in the siderite also, the two tellurides are found. One is certainly nagyágite, as it affords a mere trace of silver, if any, but much lead and gold. The vein lies in an extensive belt of argillites, whose general strike is N. 60° W. It cuts across them, and no igneous rocks appear. The altitude is 7500 ft., and the country is bare of timber or shrubs, while glaciers abound in the vicinity and even cover a portion of the claim.

Several years ago Mr. Fowler noted tellurides in the Rhoderick Dhu Claim, Boundary Creek, Long Lake Camp, Kettle River mining division, Yale district. The vein is about 12 in. wide, and lies about 12 miles north of the international boundary. It contains quartz, pyrites, and galena. In 1895 Mr. Harry Guess, of Midway, determined in the ore a considerable number of tellurides, including tetradymite and altaite. The vein cuts a large boss of granite, which is much altered along it. The granite is flanked by siliceous and micaceous schists and quartzites, the surfaces of which are often glacially striated.

Tellurides are also reported from Kruger Mountain, Osoyoos mining division, about two miles north of the boundary. The gangue is quartz and the wall-rock a much altered granite. In one or two instances tellurides are said to have been discovered in the Trail Creek gabbros.

Honduras.—In 1890 Dana and Wells published descriptions of two new tellurium minerals, the materials for which had been furnished to them by H. S. Durden, of San Francisco.[*] The minerals came from El Plomo mine, Ojojoma district, Department of Tegucigalpa, Honduras. They were mingled with a gangue consisting chiefly of quartz but with some barite and a little gypsum. Two new minerals were identified, viz., selentellurium, Se, 29.31%; Te, 70.69%, being Se_2Te_3 very nearly; and durdenite, Fe_2O_3, $3TeO_2$, $4H_2O$. The geological associations are not recorded.

Mexico.—Bergrath Dr. Burkart mentions in 1874 that some years previously he had received a mineral from Prof. A. del Castillo, in Mexico,[†] that was thought to contain bismuth, sulphur, tellurium, and silver, and which had been named tapalpite. Rammelsberg figured out the formula Ag_2S,Bi_2Te_3, but was uncertain whether he had a true compound, or a mixture of native silver and telluride of

---

[*] Edward S. Dana and Horace L. Wells, "On Some Selenium and Tellurium Minerals from Honduras," *Amer. Jour. Sci.*, July, 1890, p. 78.

[†] The mineral was sent in 1866. It was analyzed by Rammelsberg in 1869 (see subsequent foot-note) and by Genth in 1887 (*Proc. Amer. Phil. Soc.*, XXIV., p. 41). It was named Tapalpite by P. L. Monroy, *La Naturaleza*, I, p. 77, Mexico, 1869.

bismuth, or of native silver and a compound of sulphur, tellurium, and bismuth. The ore was obtained in the Sierra Tapalpa, in the State of Jalisco.[*]

Russia.—In a paper on the Kotchkae Gold Mines in the province of Orenburg, eastern Russia, H. B. C. Nitze and C. W. Parington,[†] mention the occurrence of tellurium (or tellurides?) as a minor mineral associated with gold. The country rock is a fine-grained, gray granite, which is rendered schistose along some fractured belts. The gold-quartz veins occur in the schistose belts.

Siberia.—Gustav Rose[‡] many years ago, in an account of his travels in the Altai Mountains in Southern Siberia, records the existence of two pieces of tellurides, each a cubic foot in size, in the museum of Barnaul, on the Ob River. The ore occurred in pockets in a greenish-gray talc schist. It was accompanied by a little blende, pyrite, and chalcopyrite. The telluride of lead afterward named altaite was brought back by Rose and subsequently analyzed.

Spain.—In 1879 David Playfair[§] announced the detection of thallium and tellurium in flue dust obtained in roasting Spanish copper pyrites from some locality not stated, but presumably the Rio Tinto district. The tellurium was in very small amounts.

Western Australia.—Tellurides have recently been discovered in important amounts in Western Autralia. One or two scattered records of them had been previously made in other provinces,[‖] but in the recently opened camps inland from Perth they are especially valuable. Of these the district of Kalgoorlie is characteristically a telluride camp, and has notable quantities of these ores.

The southwestern portion of Australia consists of a series of northwest and southeast belts of rocks as follows: Along the coast a narrow margin of Tertiary strata. Next going east, Mesozoic rocks, not always present. Beyond these some areas of Paleozoics are known, and then the chief formations present themselves which form the foundation of the continent. These are pre-Cambrian schists, granite, and belts of basic eruptives, in the last named of which the gold deposits are found. At Kalgoorlie, as the writer learns from Mr. G. J. Bancroft, who has just returned from Australia, there is an area of about a square mile, of diamond-shaped outline, which has the valuable deposits. The country rock, locally called "blue stone," is manifestly an altered basic eruptive; but in thin sections, prepared from a specimen kindly given me by Mr. Bancroft,[¶] only indefinite alteration products could be detected, apparently of chloritic and serpentinous nature, together with some secondary quartz. Rather large platy crystals of leucoxene are in the rock, having still preserved on their surfaces the

---

[*] Burkart, "Ueber das Vorkommen verschiedener Tellur- und Wismuth-Minerale in den Vereinigten Staaten von Nordamerika," *Neues Jahrbuch*, 1874, p. 30.

[†] Rammelsberg, *Zeitschrift der deutschen Geol. Gesellschaft*, XXI., p. 81.

[†] H. B. C. Nitze and C. W. Purington, "The Kotchkae Gold Mines, Oural Mountains, Eastern Russia," *Engineering and Mining Journal*, Feb. 19, 1898, p. 219. The paper was read at the Atlantic City meeting of the *Amer. Inst. Min. Eng.*

[‡] G. Rose, "Ueber zwei neue Tellur-Erze vom Altai," *Poggendorffs Annalen*, XVIII., p. 64, 1830.

[§] David Playfair, "Note on the Detection of some Rare Metals in Pyrites Flue Dust," *Chemical News* XXXIX., p. 245, 1879.

[‖] A. Liversidge, "The Minerals of New South Wales," p. 71, 1888. Native tellurium is reported as a rare mineral at Bingera, Murchison County.

[¶] Mr. Bancroft read a paper before the Atlantic City meeting of the *American Institute of Mining Engineers*, Feb. 16, 1898, entitled, Kalgoorlie, Western Australia, and its Surroundings. It is printed in the *Engineering and Mining Journal*, Feb. 19, 1898, p. 220.

triangular markings characteristic of the original ilmenite. A specimen from a dike about a mile from the mines, when examined microscopically, was found to contain recognizable traces of dark-brown hornblende, originally in large crystals, which were altered to more or less fibrous masses of actinolite or tremolite. The ores range along schistose belts in the country rock and are at times associated with lenses of a peculiar slate. Thin sections of this slate revealed an excessively finely crystalline mass, with blotches of red hematite, apparently from decomposed pyrites crystals. All through the mass of the rock are minute prismatic crystals, of high refractive index, and doubtless rutile, as is so often the case in slates. No quartz grains could be detected, but the mass of the rock was the feebly refracting or practically isotropic aggregate, characteristic of soft slates. In the hand specimen the rock has every appearance of being a soft clay slate.

In discussing in a general way all the gold deposits of Western Australia, Baron van Oldruitenborgh urges the view that the ores came up with the igneous intrusions as sulphides, tellurides, and perhaps as the native metal. From the intrusion fumarolic emanations, at first provided with haloid salts, later with sulphides, mineralized the cavities and porous portions of the enclosing country rock. As the dike chilled and solidified cavities from contraction were developed which, while still very hot, became silicified and mineralized by hot waters. Cavities from contraction were also produced in the surrounding country rock, which sometimes penetrated the dike and sometimes ran along it, and which were likewise mineralized. After the final chilling orogenic movements produced fissures which cut all the rocks, and which were filled with silica by the cold and impoverished circulations of this stage. Erosion and superficial alteration followed.*

From Mr. Bancroft the writer learns that the actual ore at Kalgoorlie, consists of calaverite and native gold. In a specimen kindly given the writer there is a yellow telluride and a silvery one. In the midst of the latter a bit of wire gold is embedded. There is no sign of alteration, and the native metal and the telluride must have crystallized together.

RÉSUMÉ.

The preceding pages cannot fail to impress the reader with the fact that tellurium is a more widely distributed and more common associate of gold than has been generally appreciated. Its small actual amount as measured in the ordinary percentages cited in assays of the precious metals makes it somewhat difficult of detection, and has probably often led to its being overlooked. An ounce or a fraction of an ounce of gold to the ton may be easily and accurately found by dry assay, but so small an amount of tellurium or any other metal to be found in the wet way calls for the most refined analysis. The refractory nature of tellurides, and even of the characteristic brown spongy gold yielded by their alteration, may raise the suspicion, when gold ores behave in this way, that tellurium is present, and the suspicion if verified on analysis may throw light on the best methods of treatment. The fact that telluride ores, often when very rich, fail to show colors on panning is another peculiar and significant feature. The affinity of tellurium

---

* Baron Sloet van Oldruitenborgh, "Observations techniques sur les Goldfields de Coolgardie, Australie Occidentale," Liege, 1897, p. 22.

for bismuth is one of its striking properties, and the two go so often together, that the presence of tetradymite is an indication of tellurides of the precious metals, and bismuth itself may be in some obscure way, as Mr. Pearce has shown, combined with gold.

The geological relations of the tellurides are extremely varied, although it is a fair statement that igneous rocks almost always are the wall-rocks. Among the igneous rocks, however, a wide range has been recorded, from the trachytes and phonolites of Colorado, Montana, and South Dakota, and the quartz-bearing andesites of Hungary, to the basic intrusions of Western Australia and California. Tellurides are known in metamorphic schists of doubtful antecedents; in one sedimentary slate in British Columbia, without recorded igneous rocks in the neighborhood; and in limestone in North Carolina. Notwithstanding these variations, the characteristic association with the andesites of the Hungarian petrographic province and with the trachyte-phonolite petrographic province east of the Rocky Mountains is striking. It will be interesting to discover whether they will also appear in the extension of the latter's peculiar rocks in the Trans-Pecos area of Texas.

NOTES ON GOLD MINING IN SIBERIA.

BY RENE DE BATZ.

THE Russian gold production is derived from Finland, the Ourals, and Siberia. That of Finland is insignificant, not exceeding 15 kg. per annum. That of the remainder of the Empire is divided about as follows:

Division.	Alluvial Mines.			Lode Mines.			Total.		
	Pouds.	Kg.	Per Cent.	Pouds.	Kg.	Per Cent.	Pouds.	Kg.	Per Ct.
Oural................	490	8,026	19.5	155	2,539	6.2	645	10,565	25.8
Direction of Mines of Tomsk..........	370	6,061	14.7	10	164	0.4	380	6,225	15.1
Direction of Mines of Irkoutsk........	1,465	23,997	58.7	10	164	0.4	1,475	24,161	59.1
Totals...........	2,325	38,084	93.0	175	2,867	7.0	2,500	40,951	100.0

Consequently 75% of the total may be attributed to Siberia, though if the divisions of the Empire were considered geographically, rather than politically, practically the whole would be credited to Siberia, since the most productive mines of the Ourals are situated on the eastern side of these mountains. In the following notes I have confined myself to a description of the gold resources of Siberia, which are increasing in importance through the construction of the great trans-continental railway.

I. Administrative Divisions.—The political administration of Siberia is divided as follows: I. Western Siberia: (*a*) Government of Tobolsk; (*b*) Government of Tomsk. II. Eastern Siberia: (*a*) Government of Jenessei; (*b*) Government of Irkoutsk. III. Region of Jakoutsk: (*a*) Province of Jakoutsk. IV. Amour Region: (*a*) Province of Transbaikalia; (*b*) Province of the Amour; (*c*) The Coast (Primorskoi). V. Region of the Steppes: (*a*) Province of Akmolinsk; (*b*) Province of Semipalatinsk; (*c*) Province of Semiretchensk. Divisions II. and III. comprise the Government General of Eastern Siberia, IV. is that of the Amour, and V. that of the Steppes.

The governments of Western Siberia, formerly administered by a governor-general, are now assimilated with the governments of European Russia; they, with Eastern Siberia, constitute the true Siberia, inhabited already by colonists of Russian stock to the extent of 80 to 90%. The other provinces, in which the natives predominate, either by reason of the local conditions or because they are almost uninhabitable anyway, have not yet been penetrated much by Russian colonists.

The exploitation of the mines of Siberia is under the supervision of the Section of Mines (Ministry of Agriculture and State Domains), besides the three consulting bodies following: (1) The Council of Mines, for legislative and administrative questions; (2) the Scientific Commission, for technical questions; and (3) the Geological Commission, for the preparation of geological maps, etc.

The Section of Mines includes the Department of Mines proper, to which report directly the Directions-general of Mines of Tomsk and Irkoutsk, which are themselves divided into districts, with an engineer at the head of each. The political divisions entering into these districts are shown in the following table:

Directions of Mines.	Office.	Districts.	Office.	Political Divisions.
Tomsk.....	Tomsk..	Tobolsk-Akmolinsk...............	Omsk............	Government of Tobolsk (except the district of Berezovsk) and the province of Akmolinsk (Government-general of the Steppes.
		Semipalatinsk-Semiretchensk.....	Semipalatinsk.....	Provinces of Semipalatinsk and Semiretchensk (Government-general of the Steppes).
		Tomsk...........................	Tomsk............	Government of Tomsk.
		Jenissei, northern................	Jenisseisk.........	North part of the Jenissei district.
		Jenissei, southern................	Krasnoiarsk.......	South part of the Jenissei district, districts of Krasnoiarsk and Kansk (not including the system of Biriouzinsk).
		Atchinsk-Minoussinsk............	Selo-Karatous.....	Districts of Atchinsk and Minoussinsk.
Irkoutsk...	Irkoutsk	Primorskoi.......................	Khabarovsk.......	Province of Primorskoi (Maritime or Littoral Province): Island of Sakhalin.
		Amour..........................	Blagoviestchenpk.	Provinces of the Amour.
		Transbaikal, eastern..............	Nertchinsk........	Districts of Nertchinsk, Tchita and Akchinsk (province of Transbaikalia).
		Transbaikal, western.............	Verkhne-Oudinsk.	Districts of Olekma (government of Jakoutsk).
		Lena............................	Village Vitim.....	Districts of Bargouzinsk, Verkne Oudinsk, Selenga and Troitzkosafsk (province of Transbaikalia). District of Kirinsk (government of Irkoutsk).
		Biriouzinsk.......................	Nijne-Oudinsk	System of the Birioussa (district of Kansk, government of Jenissei) and districts of Nijne-Oudinsk, Bologanski, Irkoutsk, and of Verkolensk (government of Irkoutsk).

It will be observed that to the Direction of Mines of Tomsk belong the two governments of the old Western Siberia and a part of Eastern Siberia (Government of Jenissei) while the Direction of Mines of Irkoutsk is occupied with the Province of Jakoutsk, the Amour region, and the Coast. To each of these Directions is attached a laboratory for melting and assaying the gold, and a bureau for the receipt of imposts. A geologist at Irkoutsk, and a surveyor at Tomsk and Irkoutsk complete the staffs of the Directions. Each district engineer has a secretary, who takes his place during his tours of inspection, and a commissioner of locations, charged with delimiting the concessions demanded.

The functions of the officers of the Direction and the district engineers are the legal control of the workings, the enforcement of the regulations concerning workmen and employers, the receipt of imposts, and the inspection of the operations of the various undertakings, including the installation and use of steam-boilers. The engineers, moreover, have to advise as to the exploitation of the deposits, and in connection with the surveyor and the commissioner of locations make out the papers for concessions of state lands. These engineers are graduated from the Institute of Mines at St. Petersburg (founded in 1773), which now has about 300 scholars; the instruction is confined to mining and metallurgy.

The direct supervision of the mines is in the hands of the special police commissioners attached to the Department of Mines, who have at their disposition, for the prevention of disorder and the convoy of bullion, Cossacks in Eastern Siberia, and civic guards in Western Siberia. The maintenance of the police is an obligatory charge upon the mine owner.

II. Regulations Governing Gold Mining.—The regulations governing gold mining in Siberia as well as in Russia form a special chapter of the mining code, contained in Vol. VII. of the Imperial laws. Before mentioning the principal points it should be remarked that by far the most part of the lands of Siberia belong to the state domain, or to the emperor personally (pertaining in the latter case to what is called the Cabinet of his Imperial Majesty). The proprietary lands, which can be granted by the state to individuals, do not form a very considerable part of the whole. As for the lands of the Cossacks, they are of far less importance than in Southern Russia. The following information applies only to the imperial and proprietary lands.

Throughout Siberia individuals may undertake the exploitation of alluvial deposits on the imperial and proprietary domains, except in certain parts of the Altai and Nertschinsk districts, which formerly belonged exclusively to the crown. Lodes may be exploited in all parts of the Empire where placer mining is permitted, save in the Altai and Nertschinsk districts. The exploitation of auriferous deposits is permitted to any person, Russian or foreigner, in full possession of civil rights, with the exception of certain officials and of the Jews. However, only Russian subjects may work the deposits of the Maritime Province and the islands of the coast. The lands of the state and of the imperial cabinet are granted temporarily to individuals, the time extending to the complete extraction of the gold which they contain.*

Before commencing to prospect for gold deposits (placers or lodes) every one is required to provide himself with a special permit, delivered on stamped paper by the Direction of Mines, which has no time limit and is not transferable. Declaration in writing has to be made then to the police of the localities where explorations are to be made, specifying the names of persons composing the prospecting party and the time and place of the departure of the expedition. The passports and papers of each man have to be mentioned, and a deposit sufficient to cover the publication in the local gazette of the granting of the permit has to be made. For explorations in any free locality an area of five versts (5.3 km.) in length on the width of the valley may be occupied for placers; for lodes an area with a radius of one verst (1.06 km.) from a stake showing the initial point of the exploration and the name of the person or company making it. This having been done the party has the right of making explorations so long as it remains on the ground. If the place is recognized as being of industrial value, at least two openings showing the existence of gold must be made, and the stake indicating the explorations should be replaced by one on which is posted the declaration. The deposit thought to be exploitable must be declared then to the police of the district in which the discovery has been made, in the form prescribed by ¶ 454 of the *Mining Code* (French edition), and copies of the declaration (*zaïavka*) must be sent by the claimant (*zaïavitel*) to (1) the Direction of Mines, within three months,

---

* On private lands the law gives full liberty for prospecting and exploitation to the proprietor, or any one who may have made contracts with him.

for insertion in the local gazette, together with the amount necessary to defray the cost of publication, and (2) to the district engineer for entry in his books.

The district engineer having received this declaration decides the concessions for the mines designated. This allocation of concessions takes place twice annually, in springtime and autumn, and ought to be effected by the special commissioner of locations in the course of two years after the decision of the district engineer.

In Eastern and Western Siberia the extent of a plot for placer mining may not exceed five versts (5.3 km.) in length; in width it may comprise the entire width of the valley up to 250 sagenes, observing that tributary creeks may not be included in the claim for more than 250 sagenes (533 m.) from their mouths, even when they are not taken up under a previous concession. The claim granted for working a lode mine may be of any shape desired, provided it does not exceed one square verst in area, and its width is at least a third of its length.

No company or individual may receive two contiguous concessions; one concession having been granted, another may not be allowed nearer than five versts. The owners of two contiguous concessions may, however, unite to form a company after the papers have been issued. Moreover, operators may obtain a concession of land in the neighborhood of their mining claims, for the establishment of stores, etc., payment for this being governed by a special law, after an understanding with the local administration.

The location having been made by the special commissioner, according to the rules concerning surveys, his notes, together with the plans of each lot, are sent to the district engineer, who transmits them to the Direction of Mines. The latter, in the course of six months, after verification, etc., delivers to the applicant a copy of the lot conceded and the notes of the commissioner of locations (*otvotchik*), certified and sealed. At the delivery of these papers a payment of two kopecks per deciatine (1.09 hectares) is required.

The applicant for a concession is authorized to begin preliminary work on the claim after entering his demand for it, but cannot begin its actual exploitation until after the receipt of the final documents. The method of operation is left to his discretion, but it must be such as not to endanger the health of the workmen employed, and tailings which still contain gold must not be mixed with sterile débris. After exhausting a mine the papers of concession have to be returned to the district engineer, and the constructions must be removed in the course of six months.

In Siberia the wood required for the mines is taken without payment from the lands of the state, except where there are local or special interdictions by the governors-general, or the local government councils.

III. Land Rent and Tax on Gold Extracted.—The Russian government requires from the gold mine owners a twofold impost: (1) A ground rent, calculated according to the area of the concessions, payable from the time the papers are issued; and (2) a tax on the metal (gold and silver) extracted, which differs for deposits exploited on the state domain, and on that of the Imperial Cabinet. On the former, and on proprietary land as well, the scale is as follows: Olekma district, 10 rubles per deciatine (1.09 hectares) per annum and 10% of the gold won; Amour district, 5 rubles and 5%; Eastern Siberia, Western Siberia, Perm and Orenburg Governments, and the Khirghiz Steppes, 1 ruble and 3%. In the case of proprietary lands, of course, only the tax on the precious metal is required, the ground rent being agreed upon with the landlord.

On the lands of the Imperial Cabinet the scale is as follows: Altai, Verkne-Oudinsk, and Bargouzinsk districts, 0.15 ruble per running sagene (2.133 m.) of the perimeter of the lot per annum, and 5% on a production of from 1 zolotnik (4.265 g.) to 2 pouds (32.76 kg.); 5% on the first two pouds, and 10% on the remainder when the production is from 2 to 5 pouds; and 10% on the first five and 15% on the remainder when the production exceeds 5 pouds. In the Nertchinsk and Amour districts the land tax is the same as in the Altai, but the royalty on the gold is 15% in the former, and is arranged by special agreement in the latter.

Besides these taxes the miner is charged with the expense of carrying the bullion to St. Petersburg, which is 46 rubles per poud from Irkoutsk and 33 rubles from Tomsk. It goes without saying that the transportation of the gold from the mines to the police headquarters, and from there to the Mines Direction is also at the expense of the miner. In the Coast Province this comes to 150 rubles per poud. The miner has also to pay melting charges, which, according to the regulation of February 3, 1897, are fixed at 42 rubles (31.5 kopecks) per poud (16.38 kg.) of fine gold.

The gold tax above a certain limit, say 3%, is without doubt injurious to the development of the industry, since it compels miners to work only the richer deposits, which will permit them to pay the state charges before paying their own expenses.

IV. General Character of the Auriferous Deposits.—As has been already pointed out, nearly the whole gold production of Siberia is derived from placers. The only lode mines exploited in the Tomsk and Irkoutsk Departments up to the present time are Salayr in the Altai (now abandoned), Kosmodemiansk in the Jenissei (also abandoned), and Onone in the Transbaikal. The non-exploitation of the lodes may be credited both to lack of practical knowledge and deficiency in miners, and difficulty of bringing on the spot the necessary machinery. The placers on the other hand have been worked steadily since the first discovery of gold on the east side of the Altai (in 1830), and operations have extended gradually from west to east, until now they cover all the provinces of Siberia, having reached the Pacific coast in 1871.

The area covered by these auriferous deposits is considerable, extending from the meridian of Tobolsk to the Pacific Ocean (7,000 km.), and over a width north and south of about 600 km.

These placers have certain general characteristics. They are found commonly in valleys of 500 to 600 m. elevation above sea level, and have a general slope of 1 to 2%. The pay-streak (*plast*) occurs on a bed-rock (*potchva*), which in the majority of cases is schist or mica-schist, rarely gneiss or granite. The *plast* is covered by a sterile stratum of sand and loam, above which true peat is sometimes found. The relative thickness of the strata of *plast* and the overlying sand is very variable, but an average of 1: 2 may be assumed.

The following list shows how considerable is the area covered by deposits actually recognized:

I. Department of Tomsk: Tobolsk-Akmolinsk; Koktchetavsky (Petropavlosk) district; (2) Semipalatinsk-Semiretch; tributaries of Lake Zaissan; affluents of the black Irtiche, and of the Narime; (3) Tomsk; valleys of the rivers Tchoulime, Kia, Chaltire-Kojouck in the Mariinsk district; (4) North Jenissei; valleys of the Sevaglicone, Ogne, Katami, Euachimo, Aktolik, and Vangache; (5) South Jenissei; Ouderli (a tributary of the Kamenka), Great Mourojnaia, and Pitt; (6) Atchinsk-Minoussink; valleys of the black Jousse, white Jousse, Alguiaque, Amile, Sessime, Saiba, Kezire, Bliamik.

II. Department of Irkoutsk: (1) Primorskoi, the Lower Amour and its tributaries; (2) Amour; the middle Amour and its tributaries from the left, tributaries of the Guilia and the Brianta, the Zeia and its tributaries, basins of the Selindja and the Nimane, tributaries of the Boureia from the right; (3) in the East Transbaikal; the valleys of the Onone, Chilka, Ingoda, Ounda, and Konenga; (4) in the West Transbaikal; on the affluents of the upper Vitim (districts of Bargouzinsky and Verkhne-Oudinsk); (5) Lena; affluents of the lower Vitim, the Olekma, and the Lena (Kirinsk district); (6) Biriouzinsk; Birioussia, the upper Tongouskaia and its tributaries, and the upper Lena.

III. Cabinet of His Imperial Majesty: (1) Altai; rivers Souenga, Tersia, Balixa, Lebed, tributaries of the Obi, and the left bank of the Tom; (2) Nertschinsk; see special list in the Mining Code.

In general it may be said that the richest and most accessible placers of the Tomsk department have been exhausted or are about to be exhausted. They are no longer exploited on a large scale, but for the most part are worked by individuals or small companies on the *zolotnitchniki* system, the proprietor paying his men a prearranged amount, generally 3.25 to 3.75 rubles per zolotnik (4.265 g.) on the gold which they produce.

In the department of Irkoutsk the industry is established on a large scale. The auriferous deposits extend over a great area, and their thickness is considerable, while their tenor in gold is high. In the basins of the Olekma and the Vitim the average is 1½ to 1¾ and 3 to 4¾ zolotniks per 100 pouds (7.8–9.5 g. and 15.6–24.8 g. per metric ton) respectively, and on certain concessions it is as high as 5½ zolotniks. On the other land, if the thickness of the pay-streak (*plast*) is 2 to 15 ft., that of the overburden is sometimes as much as 20 sagenes (42.66 m.), in which case it is necessary to have recourse to drift mining. The earth is frequently frozen perpetually, but there are places where the frost has not reached the pay-streak, and mining in the loose ground is attended with difficulty. All the mines of the two districts are obliged to have their storehouses on the Lena, near the mouth of the Vitim, *i.e.*, a distance of at least 250 versts (268 km.) from the mines, and the workmen have to be brought from the neighborhood of Irkoutsk. The expense of working under these conditions is obvious.

However, in spite of the rigor of the climate, and the high cost of supplies and transportation, and although the discovery of these deposits dates back only to 1850, the mining districts of the Lena occupy the first rank in Siberia, and in 25 years have produced an average of 750 to 800 pouds per annum.

The Amour region, which comprises the districts of the Transbaikal, the Amour, and the Coast, is to-day the greatest center of placer-mining, by reason of the richness of the gravel and the ease of access furnished by the great waterways of Eastern Siberia. The mines of this region are divided into several groups, as follows (from west to east): The district of the divide between the Amour and the Zeia, in the foothills of the Albazine Mountains, about 100 versts (107 km.) from the Amour; this district was first discovered in 1866 by the exploring expedition of the engineer Anossof, who in spite of many great difficulties devoted himself for 12 years to the investigation of the natural riches of this region; although at that time these mines were 500 versts from the nearest inhabited place, their production in the first year of their exploitation was 50 pouds, the tenor of the gravel washed being 3 zolotniks per 100 pouds. The second group of mines comprises the basins of the rivers Guilia and Brianta, tributaries of the Zeia from the right. There is no watercourse in this district which does not show gold. Its exploitation was begun in 1876. The third group is situated in the basin of the Selendja, a tributary of the Zeia from the left. The fourth comprises the basin of the Niman, a tributary of the Boureia. It was from the rich mines of the Niman that the parties set out in 1868 which discovered the placers of the Amgoune in the Coast Province.

The alluvial deposits of the Amour occur under conditions favorable for exploitation. The auriferous stratum exists at a moderate depth, and the average thickness of the overburden does not exceed one sagene (2.13 m.), that of the *plast* being a little less than one sagene. The work is all done in the open, except at a few mines in the basin of the Niman, where the overburden is 20 ft. thick, the pay-streak 9 ft., and drift mining is practiced.

In the Transbaikal the discovery of gold dates back to 1777, when a vein was found which proved too poor to work. The placers of Chaktalinsk were discovered in 1853, and in 1865 private persons were authorized to work them. The richest deposits have now been exhausted, however, and the need of improved methods for working those of lower grade is felt.

The following table shows the yield of the sand in different districts in Siberia:

Districts.	Number of Workmen.			Production.						Zolotniks Produced Per Man.				Mean Tenor of the Gravel Per 100 Pouds.		
	1890.	1891.	1892.	1890.		1891.		1892.		1890	1891	1892	Average.	1890.	1891.	1892.
				Pouds.	Pounds	Pouds.	Pounds	Pouds.	Pounds					Dolis.	Dolis.	Dolis.
Western Siberia—																
Mariinsk	1,890	1,858	840	33	25	31	34	32	29	68	65	149	94	25½	24	22[illegible]
Khirgiz Steppes	3,691	3,189	3.264	16	14	19	32	23	18	19	24	27	23	14½	14⅜	15[illegible]
Eastern Siberia—																
Atchinsk	1,061	952	984	[illegible]	24	25	38	23	31	78	104	92	91	22½	33 9/10	25 9/10
Minoussinsk	1,242	1,174	1,416	28	8	29	6	34	18	88	95	93	92	29	39	34 7/10
Kranoiarsk (3 mines)	85	71	52	1	14	1	8	1	12	61	65	60	62	41½	31⅔	29[illegible]
Jenissei, northern	4.183	3,256	3,700	88	36	77	4	88	..	81	91	91	88	31¼	31⅝	30[illegible]
Jenissei, southern	4,430	4,408	4,874	122	29	177	1	116	32	106	102	92	100	28¼	30 4/7	25½
Kansk and Nijneoudinsk	1,076	1,050	1,044	24	33	23	30	32	14	89	87	118	98	28	29	25 9/10
Verkholensk (1 priisk)	55	54	57	1	29	2	35	4	32	120	204	323	216	91	134	180
Kirensk (3 pariiski)	65	65	135	2	30	4	38	3	37	162	290	112	188	247½	273	126
Olekminsk	6,464	6,772	7,684	575	34	545	27	657	13	342	309	328	326	229½	204	239
Nertchinsk (private undertakings)	1,109	770	1,200	23	11	22	13	25	26	81	111	82	91	39½	29	33
Tchita	657	553	669	17	19	17	20	20	32	102	121	119	114	37	35¼	34
Akchinsk	737	792	778	26	28	20	22	20	8	139	108	99	115	51½	44½	40½
Amour	2,727	3,400	4,810	185	26	427	22	423	17	684	483	342	503	156¼	133½	121
Primorskoi	319	551	401	6	38	16	35	38	21	84	115	369	189	49¾	96	107

In concluding this brief summary it should be said that Siberia is by no means to be regarded as having been thoroughly prospected. On the contrary the difficulties of communication, the dense vegetation, and the routine spirit of the Siberian miners, have so far confined explorations practically to the immediate vicinity of the watercourses, and there is to a large extent a virgin field in the mountains wherein they have their sources.

V. Methods of Placer Mining in Siberia.—With the exception of a few rare cases where the introduction of modern methods has been tried, the system of placer mining servilely followed in Siberia is the following: The trees and underbrush are first removed. The pay-streak is then uncovered by attacking the overburden in sections of about 0.71 m. deep, the only tools used being pick, shovel, and crowbar. The waste is carried to the dumps established on the side of the valley in little carts of 400 to 500 kg. capacity, drawn by a horse. This operation is carried on in autumn or winter, though sometimes it may be done simultaneously with, or only slightly in advance of, the opening of the pay-streak. In the first case care is taken to leave a thin bed of barren gravel over the pay-streak to protect it from hard frosts, this being dug away in the springtime. Sometimes advantage is taken of the autumn floods to carry away hydraulically part of the waste.

The uncovering of the pay-streak having been accomplished, its transportation to the washing places is commenced, still in the same little carts. In some places, however, the transportation of the gravel is now done with tramways. In the case of workings in the open the extraction of gravel is gauged according to the needs of the washers; in drift mining a sufficient quantity is taken out during the winter to last through the following summer.

The washing apparatus used in Siberia is a simple sluice (called *schlouss*). It is generally 10 to 14 m. long, inclined at 25%, of variable width, and provided with riffles. Mercury is not employed. To separate the large pebbles, the gravel is subjected to a treatment either in large pans with rotating arms (*tchachkas*), or more commonly in trommels (*botchkas*). At present all the trommels employed in Siberia are of a uniform type, differing only in dimensions. It is a conical screen with 12 mm. holes, made of 6 mm. boiler-plate, and supported by an interior steel shaft. It is rotated either by water power, or more rarely by steam power. Its length varies from 10 to 17 ft. and its diameter from 3½ to 4½ ft. at the small end, and 4 to 7 ft. at the large end. The sluice is placed beneath the screen. This is a trough divided longitudinally in its upper part, each section being provided with riffles, while in its lower part, for saving the fine gold, it is fitted with bundles of twigs, or sometimes with coarse cloth. Its length is 30 to 40 ft.

The requisite water is conducted through canals to the upper part of the washer, whence it is distributed to the screens. The stones are discharged from the screen into a hopper; the fines passing the apertures are received in the sluice.

With the most easily treated gravels a *botchka* can wash 40,000 to 50,000 pouds per 12 hours; with clayey gravel the capacity may be only 25,000 to 30,000 pouds.

The *tchachas* or *tchachkas* are pans of 3½ to 16 ft. diameter, and 1 ft. depth, with a 12 to 18 mm. screen in the circumference. The pebbles are discharged from time to time through a trapdoor. From 15,000 to 20,000 pouds of gravel can be treated in 10 hours in a machine of this kind.

The tailings from the sluices are carried to the dumps in wagons; in rare cases automatic conveyors of simple construction are employed. Twice daily the concentrates accumulated in the sluice are removed and washed in a secondary sluice called *amerikanka,* the bottom of which is fitted with a grating of sheet iron placed edgeways. The concentrates from this are taken to the *vachguert* for the final separation of the gold. The *vachguert* is an inclined plane about 2 m. long and 1 m. wide. The water conducted by the pipe *T,* issues from the valve *RH,* and flows in a thin, uniform sheet over the plane *B.* The workman, provided with a sort of hoe of thin wood, pushes the sand up against the current. In this fashion the lightest particles are washed off and collected in a tank, whence they are taken for a second washing. The heavy particles are retained upon the table. See Fig. 1.

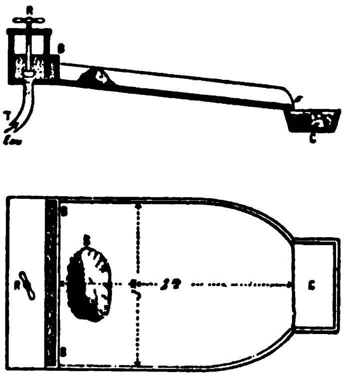

FIG. 1.—THE VACHGUERT.

When the concentration is sufficiently advanced, the operator takes a small wooden hoe of trapezoidal shape and continues the work with more care. He finishes with a soft brush, working the material until he has nothing on the *vachguert* but gold almost pure, which is then gathered on a tin scoop and dried.

The gold is then taken to the office of the company and deposited in a safe, of which the accountant has one key, while another is in the hands of the chief of police in charge of the placer. Once a month, or once in the season, the gold is shipped to the headquarters of the district, and thence to Irkoutsk or Tomsk, where it is melted, assayed, and purchased by the government. The sellers receive payment in *assignovki* on the mint at St. Petersburg for the quantity of gold and silver determined by the assay. These *assignovki* are negotiable, and are received by the government for the payment of taxes, etc. The branches of the Imperial Bank at Tomsk, Irkoutsk, and Jenisseisk will advance two rubles per zolotnik on crude gold deposited.

In concluding this chapter on the treatment of auriferous gravel in Siberia, a drawing of a typical *botchka* is presented. The apparatus consists of a trommel *b,* driven by the wheel *s,* belt *i,* and pulleys *ch.* The length is 14 ft., large diameter 6 ft., and small diameter 5 ft. The belt *i* is 1 ft. wide, and is made of seven thicknesses of tanned leather. To obtain the proper tension on the belt there is a tightener *o*. The inclined plane *r*, has a length of 32 ft. and a slope of 25%. On this plane there are riffles *pp*, movable dams *ff*, and coarse carpet *tt*. The water is conducted into the reservoir *R*, and thence to the wheel and the trommel. That destined for the latter goes through the conduits *u* and *u'*, whence it is distributed by the nozzles *aa*, placed at the posterior part and toward the large end of the trommel. By the conduit *g* the water is taken to the nozzles x_1x_1 and serves to carry away the gravel, which from the hopper progresses toward the larger end of the trommel. Water is conducted to the *amerikanka A* by *d, d', d''*. The conduit *D* takes off the excess of water from the reservoir *R*, and also that required for the wheel, and finally carries off the fine tailings. The refuse of the trommel issues upon the inclined plane *N*, accumulating in the hopper *l*, which is closed by a gate, whence it is taken by the *taratatikas* (carts) to the dumps. The quantity of water required for the treatment of 33,600 pouds of gravel is 13½ cu. ft. per second, of which eight are for the wheel and five and one-half for washing the sand. See Figs. 2, 3, and 4.

VI. Economic Conditions of Placer Mining in Siberia.—As has just been pointed out, placer mining in Siberia is an industry characterized by primitive methods, much manual labor, high cost of transportation, small capacity of the plants, of which the largest wash only 50,000 pouds (500 to 550 cub. m.) per 10 hours, and finally the complete absence of devices for saving the fine gold. The causes of the slight progress realized are the routine spirit of the Russians, which has kept them from imitating American methods, and the remoteness of the gold fields. The rapid penetration of these regions by the Siberian railway, and the interest which is now being taken by foreign capitalists in their exploitation, however, will result in a noteworthy increase in the production of gold in Russia.

The profits in placer mining in Siberia have been, and are still, in the new districts, very considerable, but in order to understand this side of the question it is necessary to describe the typical organization of the mining companies, with the exception of two or three stock companies of which the formation was authorized only recently. It is necessary also to mention that these companies have no capital, properly speaking, besides that required for current expenses, since the cost of a washing plant is only 6,000 to 7,000 rubles at the most, while the dwellings, and other buildings, canals, etc., constructed of wood cut in the neighborhood, represent only the value of the labor used for their erection. The amount of money involved in putting a concern on a running basis is therefore comparatively small.

The Siberian companies are generally formed by the association of a certain number of *companions*, who purchase deposits discovered by professional prospectors, or themselves equip an exploring expedition. In either case each member of the company contributes a pro rata share to the fund necessary to carry on the operations each year. The money received from the state for the gold won from the placers is divided directly among the members of the company, over and above the amount estimated as necessary for the expenses of the following season, which are calculated in detail in a budget or *smiet*. Consequently no reserve fund is accumulated. The only exceptions to this system are some large undertakings in the Lena and Upper Amour districts.

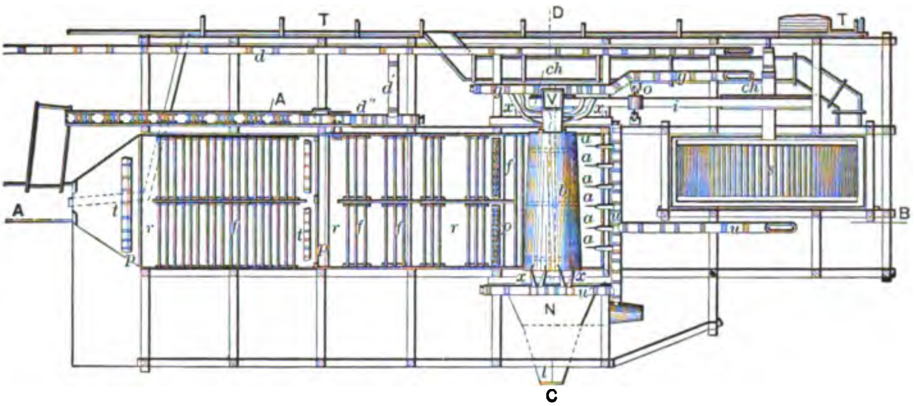

FIG. 2.—PLAN.

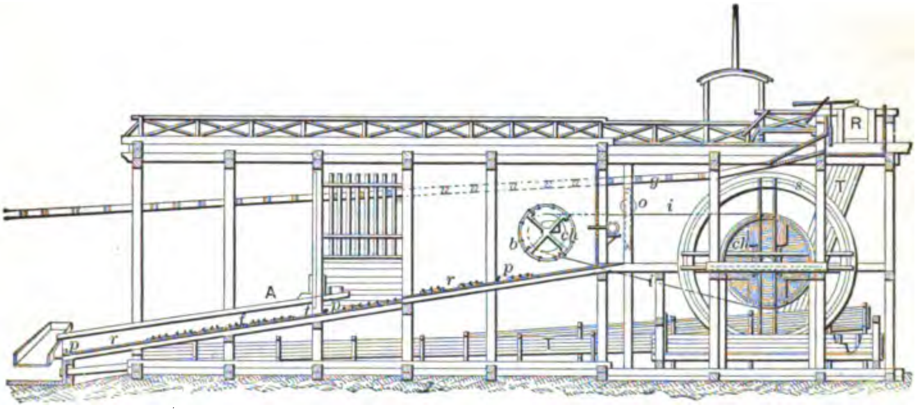

FIG. 3.—SECTION A-B.

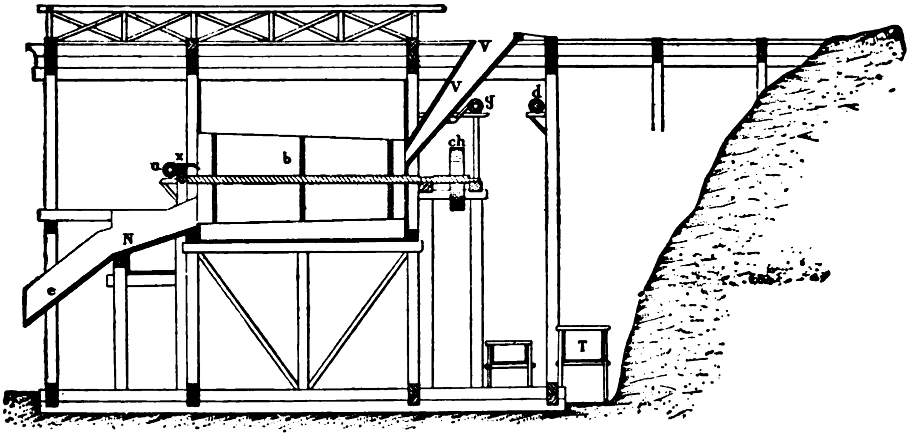

FIG. 4.—SECTION C-D.

GOLD WASHER USED AT THE "ALEXANDRINSKI" MINE, EASTERN SIBERIA.

Under these conditions it was considered until recently that a campaign ought to yield 100% profit over and above the expenses; placers which yielded only 30 to 40% were considered only fairly good, although certain ones returning as little as 20% were exploited. The following list shows the profits realized by some companies over working expenses: Company of the Niman (1891–92), 82.75%; Company of the Altai (1892–93), 40.6%; Society of Minoussinsk (1891–92), 64.4%; Astachef properties (1892–93), 33.66%; Society of Miass (1894), 21.1%; Society of the Lena (1893–94), 50.75%.

The average results for different parts of Siberia, as calculated by the *Viestnik Zolotopromychlennosti* (Messenger of the Gold Industry), are as follows: Ourals, 12.5% on the capital engaged; Western Siberia, 33.3%; Eastern Siberia, 57%.

The above figures are sufficient to show the great profits realized in gold mining in Siberia. Without doubt these are diminishing, especially in the West, but on the other hand the introduction of improved methods will render profitable many placers which have now been abandoned to leasers.

VII. Future of the Siberian Mines.—I have already touched upon the comparatively slight extent to which the resources of Siberia have been prospected, and the difficulties of carrying on operations owing to the rigor of the climate and the lack of means of communication; also upon the primitive methods of exploitation which are practiced regardless of the progress realized elsewhere in the world. The administration of the mines is generally incompetent. The proprietors of the more important ones live at Irkoutsk or St. Petersburg, or at the watering places of Europe, and leave the management of their property to a simple overseer, who may have a certain practical knowledge, but is quite unable, from lack of education, to introduce technical improvements, while the overseers and workmen look upon all innovations with mistrust and oppose them in various ways. The industry is hampered, moreover, by the laws, especially those which prevent the miners from realizing promptly the value of their product. When a miner is required legally to wait six months for his money, how is he able to introduce improvements which are needed?

This situation, however, promises soon to undergo a complete change. Already the numerous reports of French, German, and American engineers have thrown light upon the Siberian placers and dissipated the erroneous ideas as to the climate, natural resources, laws, etc. The high administrative officers of the Russian government are on their part studying the question of giving greater freedom to the gold industry. Among other things reforms which will aid in prospecting the auriferous deposits are being considered: (1) Obligation upon the grantee to work his grant within a specified period, which will probably end the existing situation, whereby under one pretext or another two-thirds of the concessions are neither prospected nor worked; (2) authorization for the locator of a claim to commence preliminary work before receipt of his papers, which, as I pointed out in a previous section, may not be obtained at present until after a delay of two years; (3) above all, liberty to sell to banks, merchants, refineries, etc., the gold won from the placers.

Moreover, the district engineers are unanimous in demanding the improvement of the highways, and the sending of special commissions to study the geology of these regions.

TABLE OF CONCORDANCE OF RUSSIAN, METRIC, ENGLISH, AND AMERICAN MEASURES.

Tenor in Doli and Zolotniks per 100 Pouds.	Tenor in Grams per Metric Ton.	Tenor in Ounces Troy per Ton of 2,240 lbs.	Tenor in Dollars per Ton of 2,000 lbs.	Approximate Tenor in Grams per Cubic Meter (About 100 Pouds of Gravel).	
1 doli.	0 g. 027 mg.	0 oz. troy 00078	$0.016	0 g. 044 mg.	$0.03
2 dolis.	0 055	0 00156	0.032	0 089	0.06
3 dolis.	0 082	0 00234	0.048	0 132	0.09
4 dolis.	0 109	0 00312	0.064	0 178	0.12
5 dolis.	0 136	0 00390	0.080	0 223	0.15
6 dolis.	0 163	0 00468	0.096	0 266	0.18
7 dolis.	0 190	0 00546	0.113	0 312	0.21
8 dolis.	0 217	0 00624	0.129	0 356	0.24
9 dolis.	0 244	0 00702	0.145	0 405	0.27
1 zolotnik.	2 g. 604 mg.	0 oz. troy 076	$1.57	4 g. 265 mg.	$2.83
2 zolotniks.	5 208	0 152	3.14	8 530	5.67
3 zolotniks.	7 812	0 228	4.71	12 795	8.50
4 zolotniks.	10 416	0 304	6.28	17 060	11.33
5 zolotniks.	13 020	0 380	7.85	21 325	14.17
6 zolotniks.	15 624	0 456	9.42	25 590	17.00
7 zolotniks.	18 221	0 532	10.99	29 855	19.84
8 zolotniks.	20 832	0 608	12.56	34 120	22.66
9 zolotniks.	23 436	0 684	14.13	38 385	25.50
13 zolot. 15⅙ dolis.	34 g. 28 mg.	1 oz. troy.	$20.67		

100 pouds = 1,637.968 kg.; 1 doli = 44.4 mg.; 1 zolotnik = 4.265 g.; 1 ton of 2,000 lb. = 907.18 kg.; 1 oz. troy = 31.104 g.; 1 oz. troy = $20.67; 1 g. of gold = $0.6646.

PRODUCTION OF GOLD IN RUSSIA AND SIBERIA.

Districts.	Since the Discovery of Gold to 1868 Inclusive.		From 1869 to 1884 Inclusive (26 years). Kg.	From 1885 to 1894 Inclusive (10 years). Kg.	1894. Kg.	1895. Kg.	1896. Kg.
	No. of Years.	Gold Extracted. Kg.					
I. Finland—							
Lapland	....	....	386.16	92.14	6.55	4.09	....
II. Oural—							
Northern	115	201,938.37	127,843.44	62,065.46	5,912.36	5,027.02	4,888.61
Southern	47	68,615.00	97,255.02	44,900.45	4,718.67	4,707.61	4,669.94
Totals	....	270,553.37	225,098.46	106,965.91	10,631.03	9,734.63	9,558.55
III. Direction of Mines of Tomsk—							
Tobolsk-Amolinsk	....	....	1,163.80	749.79	28.26	30.71	16.79
Semipalatinsk-Semiretchinsk	9	1,168.30	5,212.94	2,631.45	467.65	492.22	525.80
Tomsk	40	49,606.01	57,125.66	22,845.19	2,296.07	2,124.49	1,998.77
Jenissei, northern	35	208,960.48	60,048.26	13,346.42	1,313.27	1,111.38	1,104.83
Jenissei, southern	35	122,606.76	60,038.02	22,379.99	2,120.39	1,971.74	1,583.74
Atchinsk-Minoussinsk	35	30,091.29	22,627.33	9,092.95	950.45	973.79	843.16
Totals	....	412,432.84	206,216.01	71,045.79	7,176.09	6,704.33	6,073.09
IV. Direction of Mines of Irkoutsk—							
Primorskoi	....	....	7,567.15	5,079.44	1,953.32	1,858.72	....
Amour	1	823.50	117,440.50	65,148.17	6,707.61	7,056.09	....
Transbaikal, eastern	37	39,593.74	113,428.22	31,859.10	3,808.76	3,255.53	....
Transbaikal, western	20	22,583.98	18,878.77	5,860.35	737.51	710.48	....
Lena	20	49.417.64	278,831.83	91,911.05	11,373.04	11,809.16	....
Birlouzsinsk	35	26,146.58	10,586.39	4,253.89	544.23	358.31	....
Totals	....	138,565.39	546.732.86	204,112.00	25,124.47	24,548.29	....
Grand totals	....	821,551.60	978,433.49	382,215.84	42,938.14	40,991.34	....
V. Cabinet of His Imperial Majesty—(*a*)							
Mines of the Altai	38	18,813.25	5,103.60	2,003.68	258.39	307.12	....
Mines of the Nertchinsk	37	33,806.27	49,693.64	15,634.30	2,047.50	1,936.93	....
Totals	....	52,619.52	54,797.24	17,637.98	2,305.89	2,244.05	....

(*a*) The production of His Imperial Majesty's Cabinet, placed here under a separate heading, is already included in the production from the districts of Nertchinsk and the Altai.

The Imperial government, by the activity which it displays in the construction of the Trans-Siberian railway, and the improvement of the waterways, gives us hope of a prompt solution of the transportation question, and by the encouragement which it gives to emigration lays the basis for an abundant supply of labor in the future.

Private initiative is advancing in the direction of the organization of joint stock companies, which, possessing considerable capital, will imitate the methods employed in America and elsewhere.

Everything, therefore, indicates a new era for Siberia, which will be a prosperous one when capital and technical knowledge are united.

THE WORKING COSTS OF WEST AUSTRALIAN MINES.

BY H. C. HOOVER.

A FEW West Australian mines have now begun to reach that stage of routine work under good management that the actual working costs are becoming evident. Nowhere in the world is gold mining carried on under equal difficulties. The country is exceedingly arid, water is very scarce, and fuel not over plentiful. Timber suitable for heavy construction and underground work has to be largely imported from the United States; and owing to the severe conditions of life, labor is costly, and is moreover not as efficient as in other countries.

The gold fields cover an area of about 500 miles diameter, and conditions vary greatly between different localities. A working cost of $25 per ton in one place may represent more efficient management than a cost of $10 in another.

Water for mining purposes is secured largely from mine workings or from wells. Nearly all of this water contains a percentage of salts varying from 4 to 28, or nearly saturation point. Water for steam and domestic purposes must be condensed, and condensation costs about 3c. per gal. The miners must be supplied with fresh water at the company's expense. The salt water costs from 75c. to $7.50 for 1,000 gal., and about 300 to 400 gal. represent the average mill loss per ton, or a cost of from 25c. to $3 per ton of ore for mill water alone. The devices necessary for saving water represent a constant outlay, the cost of settling tailings and rehandling alone being about 30c. per ton. The maximum cost necessitated by the scarcity of water exists at Menzies, where at one mine it is $4.55 per ton of ore crushed. At a few localities, as Mount Malcolm, Mount Leonora, and Lawlers, fresh water is secured in sinking wells, yet not so abundantly as to allow any relaxation of the efforts toward economy.

Fuel exists at present rather plentifully in the "bush" which covers the entire interior. It is of inferior quality, and requires about 2¾ cords per horse-power per month. This wood costs from $5.50 to $7.50 per cord delivered. Were freight cheaper, or a railway built to Esperance Bay, it is probable that coal from the eastern colonies would be equivalent to wood at $5 per cord, or possibly less.

Mining timber is especially scarce.. Native woods, Jarrah and Karri, which are found along the coast, answer in some instances, but for many reasons are not much used, even in the face of the higher price of Oregon timber. Along the railway the best Oregon pine costs about $60 per thousand feet.

All imported materials increase in value very rapidly with distance from the railway, freights averaging about $25 per ton per 50 miles by team, and about $10 per ton per 50 miles by camel. As some mines are 300 miles from the railway freights are an enormous item.

One of the most difficult problems is inefficient labor. This factor is constantly improving with time, but even now the amount of work accomplished per man per day is astoundingly small. In one mine the men broke quartz in a body 20 ft. wide at the rate of 1.8 tons per man per diem; in another mine, in soft lode matter, under best conditions, 2.7 tons per man per diem. The average cost for contract shaft sinking (4×12 ft.) at Kalgoorlie is about $35 per ft. At Menzies, in much harder rock, the cost is about $100 per ft., and in the East Murchison district as much as $125 per ft. Driving varies from $10 to $45 per ft. Of these expenditures about 80% goes for wages. The cost of living where men "bach" is $3 per week. Wages vary from $16.80 to $21.60 per week for miners. In but few mines is single hand work done, not because it is not desired, but because the men are either incapable or unwilling to do it. In several mines air-drills have been installed, and in some abandoned again, because of the impossibility of securing efficient machine men, and the machine work costs more than hand work.

One question, always a large factor in working costs, is the quantity of ore, *i. e.*, the possible milling capacity. In the light of Transvaal plants, West Australian mines are, as a whole, individually small, but the grade of the ore is much higher. The following shows the average size and number of mills in each district, and the tons of ore crushed, and the yield in 1897:

District.	Number of Stamps.	Number of Mills.	Average Number of Stamps. Per Mill.	Tons of Ore Crushed.	Total Yield. Ozs.	Average Per Ton. Dwts.
Coolgardie	329	24	13.3	9,196¾	8,684¼	18⅞
East Coolgardie (Kargoorlie)	265	15	17.6	18,402½	31,735	34½
Northeast Coolgardie	182	16	11.4	4,123¼	3,729¾	18
Broad Arrow	206	15	13.7	2,682	1,791¾	13½
North Coolgardie	318	24	13.2	2.665	5,284	39⅝
Mount Magnet	128	13	9.8	2,752¾	5,145¾	37½
Yilgarn	125	7	17.8	2.855¾	1,148¾	8
Dundas	186	16	11.6	2,631	2,797½	21¼
Murchison	445	33	13.4	6,788½	7,802½	22⅞
East Murchison	48	4	12.0	1,949½	2,907¼	29¾
Yalgoo	40	5	8.0	516	644½	24⅞
Pilbarra	15	2	7.5	407½	603¾	29¾
Peak Hill	20	2	10.0	447	1,734	77⅝
Northam	80	1	80.0	....	....	....
Totals	2,387	177	13.4	55,367½	74,008¾	26¾

The following estimates are believed to be very close to the average cost in well-managed mines using wet mills. It may be advisable to state that dry milling and direct cyaniding processes are working for a cost very close to wet milling, and because of better extraction with refractory ores are coming into favor, but no data can be given at present for such costs: Kalgoorlie, $10 per ton; Coolgardie, $10; Menzies, $20; Mt. Malcolm district, $8; East Murchison district, $7; Murchison, $10; Yilgarn, $7. None of these estimates include depreciation, London expenses, etc.

One of the very few efficiently managed mines to yet publish the working costs is the "East Murchison United, Ltd.," situated in the East Murchison district, and managed by D. P. Mitchell of California. The mine is equipped with a 20-stamp mill. The following is the statement for December, 1897: Mine development, $1.86; stoping, $1.94; timbering, $0.20; hoisting, $0.49; tramming, $0.29; milling, $1.20; general expenses, $1.70—total, $7.68.

With the introduction of the comprehensive scheme of bringing water from the coastal streams to the gold fields in the interior, the further extension of railway facilities by the government, the decrease of freight charges, so as to allow the use of coal instead of brush-wood, the increased efficiency of labor, and above all the introduction of more trained managers, these working costs will be further reduced. As a whole, it may be said that, as a rule, $10 ore will not yield a profit, although there are individual exceptions. There is in Western Australia a large amount of ore of less than $10 per ton in grade.

PROGRESS IN THE METALLURGY OF GOLD AND SILVER.

BY WALTER RENTON INGALLS.

IN treating of the metallurgy of gold and silver it is always difficult to establish a line of division between it and the metallurgy of other metals, especially lead and copper, since at the present time by far the more part of the silver production of the world is obtained in connection with these base metals, while a large part of the yield of gold is derived in the same manner. Indeed a large proportion of the gold which is won from gold ores proper by amalgamation and other special processes is turned over for refining to the same concerns which are engaged in the desilverization of silver-lead and the refining of the doré bullion resulting therefrom. Nowadays a good deal of the gold slime produced by the cyanide works is also sold to these refiners, the entire output of the Mercur district being thus disposed of.

In describing the progress in the metallurgy of gold and silver, therefore, it has been decided to limit arbitrarily the scope of this paper to the processes of amalgamation and lixiviation which belong to the metallurgy of gold and silver, and to no other metal. Improvements in the treatment of silver-copper ores and silver-lead ores are described elsewhere in this volume, as is also the refining of doré bullion.*

The processes which belong properly to the metallurgy of silver have lost a good deal in importance recently. Previous to the beginning of silver-lead smelting at Eureka, Nev., not quite 30 years ago, the entire production of silver in the United States was derived either by the Washoe process of pan amalgamation or by hyposulphite lixiviation. Up to the discovery of the silver-lead mines of Leadville, in 1878, and even for several years thereafter, these processes were of a good deal of importance, but during the last 15 years they have dwindled steadily until they are now insignificant. The total silver production of the United States in 1897 was 58,488,810 oz. Of this the silver-copper mines of Butte, Mont., and the silver-lead mines of Leadville, Colo., and the Cœur d'Alêne district of Idaho produced about 20,000,000 oz. There is a

---

* Reference is to be made especially to the papers on "Gold Milling in Gilpin County, Colo.," and "Cyanide Practice at Florence;" also to the papers on the "Progress in Ore Dressing," by Prof. Richards, and "Progress in the Metallurgy of Lead," by Prof. Hofman.

good deal of silver-lead ore produced in the Castle and Neihart districts of Montana, in the Wood River region of Idaho, in Bingham Canyon, Park City, and the Tintic district of Utah, in the Magdalena Mountains in New Mexico, and in numerous parts of Colorado besides Leadville, and at isolated points elsewhere in the Rocky Mountains. It is probable, therefore, that fully one-half of the present silver product of the United States is obtained from ores in which lead or copper are the more important metals. Certainly a good deal more than one-half of the American silver is produced by silver-lead and silver-copper smelters, who buy large quantities of silver ores pure and simple, for which in many localities smelting is the cheapest method of reduction. Their silver and gold contents finally appear in the market as a product obtained from the refining of base lead or crude copper.

In the case of Australia this is true probably to even a greater extent, since the most important producers of silver there are the Broken Hill mines, which have an ore sufficiently high in lead to make silver-lead smelting the most economical method of reduction. These mines furnish nearly the whole silver output of Australia. Even in Mexico a large part of the silver production is now derived from silver-lead and silver-copper ores. In 1896 the value (in Mexican currency) of the silver exported from Mexico in base lead bullion and in blister copper was $28,565,843; $9,971,053 left the country in the form of ores, going chiefly to American silver-lead smelters, and $1,495,306 was exported in the form of silver sulphide, being presumably the product of leaching works. The amount of silver deposited for coinage in the Mexican mints was $20,941,976. The last, together with the silver sulphides exported, indicates more or less the production of silver by amalgamation and lixiviation in Mexico at the present time. It undoubtedly overstates the truth, however, since there is a good deal of silver produced by lead smelters in the mountains who cupel their bullion and deposit the doré bars at the mints.

There is at the present time very little silver produced in the United States by amalgamation or lixiviation. In Colorado there is not a single mill employing these processes. In Montana, where within the 10 years last elapsed the ores of the Alice, Bluebird, Lexington, Granite Mountain, Bimetallic, and Elkhorn mines have been treated by pan amalgamation, the production of silver in the form of mill bullion in 1896 amounted to only 676,450 fine oz., the falling off being due either to the exhaustion of these mines or the impossibility of working them profitably at the existing price for silver. In Idaho the only important silver mill is that of the De Lamar Co., at De Lamar, Owyhee County; in this case the gold contents of the ore are now more valuable than the silver, and the cyanide process has been substituted recently for pan amalgamation. In Utah the ore of the Ontario mine at Park City has been treated by pan amalgamation, and that of the Daly mine at the same place by the Russell process of lixiviation. The production of these mills in 1896 was 1,191,673 and 714,373 oz. of fine silver respectively. Since August 1, 1897, both of these mines have been idle, owing to the inability of their managers to work them at a profit at the present price of silver. A comparatively small amount of silver is recovered by pan amalgamation in the Tintic district, probably not more than 200,000 oz. in 1896. In Arizona the total production of silver in bullion in 1895 was 114,633 oz.; in 1896 it was only 18,177 oz. In Nevada the Comstock ore is beneficiated by pan amalgamation, and there are a few small mills in operation elsewhere in the State. Their production in 1896 may be fairly estimated at 500,000 oz. The total production of silver in New Mexico, where the lixiviation and amalgamation processes were formerly extensively applied, is now insignificant. In California, Oregon, Washington, Wyoming, and South Dakota there are no silver mills in operation. It appears, therefore, that the total production of silver in the United States in 1896 by pan amalgamation and tank lixiviation did not exceed 3,300,673 oz. There was also a production of a few hundred thousand ounces from the retort bullion of gold stamp mills.

In Australia, Germany, and Spain the proportion of the production of silver after this manner is much smaller than in the United States. In Mexico the patio process is a good deal less important than it used to be, and of the six countries ranking as the most important silver producers of the world, it may be assumed that Bolivia is now the only one where the old methods hold the premier place.

There are no statistics to show what is the relative proportion of the output of gold in the United States by the stamp-amalgamation mills, lixiviation works (cyanide and chlorination), smelteries, and placers, although there is no doubt that the last is very small. G. T. Beilby estimates the total production of gold by the cyanide process in 1897, as follows:* Africa, 825,000 oz. of bullion; Australia, 308,000; New Zealand, 263,000; United States, 190,000; India, 18,800; Mexico, 10,200; other countries, 5,000; total, 1,620,000, equivalent to 1,215,000 ozs. of fine gold. Placer mining is carried on in California in the valleys of the Yuba, Feather, and American rivers; in Idaho along the Snake River and in the Boisé Basin; in Montana in the vicinity of Helena, Virginia City, and Bannack; in Colorado at Twin Lakes and in the vicinity of Breckenridge; in Alaska at a few places in the Yukon Valley. With these exceptions there is practically no placer mining in the United States at the present time.

Speaking generally, the production of gold in Alaska, California, and South Dakota is made chiefly by stamp and amalgamation mills. Douglas Island, Alaska, the camps of the Mother Lode in California, and the Black Hills, S. Dak., are the great gold milling centers of the United States. Black Hawk, Colo., is also an important gold milling center, but the more part of its output is contained in the pyrites concentrates which are shipped from the mills to the smelters at Denver. There are many gold mills at other points in Colorado connected with isolated mines, but with all the stamp mills, chlorination and cyanide works in that State at the present time, there is more gold ore (*i.e.*, gold ore that does not contain other metals of value except an insignificant proportion of silver) treated by the smelters than by the gold mills proper.

The cyanide and chlorination processes find their chief fields of application in the United States in the Cripple Creek district, Colo., Mercur, Utah, De Lamar, Nev., Marysville, Mont., Bodie, Cal., and at various places in Arizona. There are in the United States at the present time 40 cyanide lixiviation works. The number of chlorination works is comparatively small.

Of the 211,089 tons of ore produced in the Cripple Creek district in 1897

---

* *Journal of the Society of Chemical Industry*, Feb. 28, 1898.

136,865 tons were treated by the cyanide and chlorination processes, the production amounting to $5,070,100. There were in operation four chlorination works, two cyanide works, and one works using both processes. The works of the Metallic Extraction Co., in this district, may be considered to embody the best practice at the present time in the treatment of ores direct from the mine by the cyanide process. They treat an ore requiring fine grinding and so hard as to tax severely the best crushing machinery, while the more part of it (containing the gold as telluride) requires a preliminary roasting. Herein the problems that have had to be solved have differed from those at Mercur in Utah, where the ore is of an exceptionally favorable character, and at Bodie in California, where it has been only a question of the treatment of stamp-mill tailings, for which there was a good lead in the South African practice. The metallurgist who desires to study the cyanide process in its most complex features will probably have to go to Cripple Creek to do it.

The barrel chlorination process has also reached its highest development in the Cripple Creek district, where the works of the Colorado-Philadelphia Reduction Co. at Colorado City, and those of the El Paso Reduction Co. at Florence are the largest and most lately constructed of any in the United States. The chlorination works of the Golden Reward Co. at Deadwood, S. Dak., are modern, but having been built previously to the Cripple Creek works their best points were embodied in the latter. The works at Boulder, Colo., are among the most recent and best arranged in the country.

The cyanide and chlorination works of the Cripple Creek district compete for precisely the same kinds of ore. Eventually they will undoubtedly furnish accurate data as to the comparative efficiency of the two processes. At present the active business competition among them prevents the publication of the results of their metallurgical practice, and it is, consequently, more or less uncertain which process has the advantage. The cyanide works are compelled to do the finer crushing, 30 or 40-mesh against 12-mesh; except the oxidized ores (rapidly diminishing in supply), which can be treated raw in the cyanide works, the ores have to be roasted, and roasted equally sweet, for both processes; with respect to labor and chemicals the cyanide process is probably the cheaper; with respect to the extraction of gold the chlorination process is probably the more efficient, but the difference is offset more or less by the recovery with the cyanide process of the ounce or two of silver which the Cripple Creek ores carry invariably, and is lost with the chlorination process.

At Mercur, Utah, there were five cyanide works in operation in 1897, with a nominal capacity of 760 tons per diem. There were several large mills in course of construction, however, and by the end of the current year the leaching capacity of the district will be probably between 1,600 and 2,000 tons per diem, which will make Mercur the greatest center of the cyanide process in the United States. The gold production of this district in 1897 was 37,739 oz., all of which was turned out as cyanide bullion.

In Nevada the largest cyanide works is that of the De Lamar mine in Lincoln County, which treats from 350 to 400 tons of ore per 24 hours, and is reputed to have produced about $1,700,000 in gold in 1897. At these works the peroxide of sodium modification of the cyanide process is said to be in use.

The remaining large cyanide works in the United States are for the recovery of gold from stamp-mill tailings. The Montana Mining Co., Ltd., has a plant of 400 tons per diem capacity (erected in 1897), and the Standard Consolidated Mining Co. of Bodie, Cal., the Harquahala Gold Mining Co. of Harquahala, Ariz., and the Congress Gold Mining Co. of Congress, Ariz., have large plants for this purpose. A new works was erected in 1897 for the treatment of an accumulation of Comstock mill tailings at Virginia City, Nev.

The Pelatan-Clerici electro-cyanide process has found application in the United States at De Lamar, Idaho, and at two or three small mills. The results at De Lamar were rather better than pan amalgamation, but for some reasons the simple cyanide is now taking the place, in part at least, of the Pelatan-Clerici process.

Besides the places previously mentioned gold chlorination is carried out in the United States at the Haile mines, N. C., at the Alaska-Treadwell mine on Douglas Island, and at Angel's Camp and Grass Valley in California. At the Haile mine the modification of the barrel process, by Adolph Thies, is used. Elsewhere the old process of vat chlorination is employed.

In the treatment of ores direct from the mine by the cyanide process the tendency of American practice is to roast everything before leaching. This is now done commonly at the Cripple Creek works. At the Planet-Saturn mill in Fool's Gulch, Ariz., the ore is also roasted. At the North Pole mill in Baker County, Ore., an ore consisting of pyrite and arsenopyrite, carrying gold in a very finely disseminated condition, is treated successfully by the cyanide process after a preliminary roasting in a Brückner furnace. Up to the present time the ores of the Mercur district have been leached raw, but at the new De Lamar works all the ore is to be roasted, the purpose being to eliminate the arsenical compounds. Experiments made recently at La Cigale mill showed a great improvement in the extraction after a preliminary roasting, and furnaces for this purpose are also to be installed there. It is probable that before long all the cyanide works in this district will adopt the same system.

In summarizing the literature of the year it is noteworthy that by far the more part of the contributions have been in relation to the cyanide process, indicating the widespread attention that has been directed to this method of gold extraction. Of the numerous patents which have been issued it appears also that the majority have to do with the cyanide process or modifications of it.

Unfortunately many important developments in the cyanide process have not yet been described in technical literature, and it is consequently impossible to prepare a review of the subject which will be thoroughly up to date. In the United States these consist largely in mechanical improvements in the handling of the ore, and in a study of the conditions of the precipitation of gold from the solution, matters which are referred to more or less by Mr. Argall in the excellent paper which accompanies this. Up to the present time electrical precipitation has found no application in the United States, except in the Pelatan-Clerici process, American metallurgists being satisfied generally with the economy and efficiency of zinc shavings. Even in South Africa there are many metallurgists who hold the same view.

In the South African practice the most noteworthy developments of 1897 were the successful operation of the plants for the treatment of the slimes, which may now be considered a problem solved, and the gradual introduction of chemical methods for the purification of the gold-precipitate before melting, a procedure which has been followed regularly in the United States.

Cyanide Tank Practice.—Experiments at La Cigale mill at Mercur, Utah, showed that when the solution was forced through a false bottom in the tank into perforated pipes rising through the ore the solution of the gold took place more quickly than when ordinary percolation was used. The experiment showed an extraction of 68% in 24 hours and 92% in 48 hours.

Roasting Previous to Cyaniding.—It is essential that the ore be roasted sweet before applying the cyanide solution, else the consumption of cyanide may be very high. According to Wallace MacGreggor the quickest and most satisfactory test to determine if the roasting has been properly done is to take from 100 to 250 g. in a beaker with about 200 c.c. of water; shake for a minute and filter; to the filtrate add carefully a small quantity of cyanide solution made up to the same strength as that used in the regular work of the plant. If no cloudiness develops the ore is suitable for treatment with the cyanide solution. If a brown coloration appears there are still some soluble salts of iron left in the ore, which will cause a somewhat higher consumption of cyanide and may lead to a precipitation of ferro-cyanide compounds in the zinc boxes. If there is a blue coloration, soon becoming a greenish blue precipitate, then the ore is very badly roasted and a high consumption of cyanide may be looked for, while the circulating solution will be made very foul.

Cyanide vs. Chlorination in South Africa.—Mr. Charles Butters, in his presidential address before the Chemical and Metallurgical Society of South Africa, said: "There has been a great deal of study given to the use of chlorine as a dissolving agent, but its use is very limited in comparison with that very easily handled solvent, cyanide, so that I am prepared to state that cyanide is slowly but surely displacing chlorine on the Witwatersrand for all purposes. I have no doubt that upon these fields eventually the use of chlorine will be discontinued; and, having been among the first to be connected with the introduction of the chlorination process in this country, I have rather jealously guarded the interests of chlorine as a solvent. I must admit now that, given equal preparation of material for the use of the solvent, the same percentage of solution of precious metal in the materials treated can be obtained as well with cyanide as with chlorine."

Mechanical Concentration in Connection with the Cyanide Process.—At the Brodie mill at Cripple Creek, the process was introduced in 1897 of leaching raw the telluride ore (crushed to 30-mesh), and afterward concentrating on Wilfley tables. The concentrates are roasted and leached again. The tailings from the second lixiviation are again passed over the concentrators, whereby 10 or 12 tons are reduced to one, and the concentrates are subjected once more to the cyanide solution. It is claimed that an important additional saving has been effected in this manner, but I am disposed to think that the data as to this are misleading. Some of the coarse pellets of gold that have been subjected to the cyanide solution, practically without action upon them, may be recovered from the tailings by gravity concentration; but finely-crushed ore containing its value in the form of brittle telluride minerals appears ill-adapted to this kind of treatment.

Metallurgical Practice at Johannesburg.—According to the report of the Rand Central Ore Reduction Co. for the year ending June 30, 1897, the Robinson, Central, and Crown Reef works were operated during the year for the treatment of slime. The Robinson works treated 75,587 tons of acid slime averaging 5 dwt. 15 gr. at a slight profit. The Central works treated 33,732 tons, assaying 3 dwt. 2 gr., at a loss. This is the first plant on the fields to attempt the treatment of slimes of so low grade. The Crown Reef works in five months treated 14,901 tons, assaying 4 dwt. 12 gr. The results were not satisfactory.

The Siemens & Halske process has continued to be introduced. There are now 13 plants on the Witwatersrand (including all the slimes plants) using this process, while 17 are in course of erection. Continued study in the construction of the boxes has been carried on and standard sizes are now constructed. A plate 26 in. wide, 48 in. deep and $\frac{3}{16}$ in. thick is used. For sand plants the boxes are 5 ft. square and 32 ft. long and contain 156 iron anodes, while in the slimes plant the boxes are 10 ft. wide and 5 ft. deep and contain 24 iron anodes in each compartment; there are 12 compartments and consequently 288 anodes, which are set 4.5 in. apart. In the slimes plants a current density of about 0.04 ampères per sq. ft. is used, and in the sand plants about 0.6. Lead sheets cut into strips and lead shavings are used in various plants as cathodes.

During the early part of the year a serious difficulty was encountered in the treatment of slimes in the inability to dissolve the gold contained therein. This was overcome by the injection of air into the pulp by means of a large low pressure air compressor, this being the device of W. A. Caldecott.

Precipitation of Gold from Cyanide Solution—J. S. MacArthur has patented* a modification of the method of precipitation of gold by zinc from cyanide solutions containing copper, which is ordinarily precipitated on the zinc, interfering more or less with the precipitation of gold and silver. The zinc is previously coated, according to the new specifications, with metallic lead, the shavings being conveniently prepared by immersing them for about a minute in a solution containing about 1% of lead in the form of acetate or some other suitable salt. In the case of solutions containing mercury, metallic lead, preferably in the form of shot, is added, the claim being that the mercury, and possibly a little of the silver, will be precipitated on the lead, while the precipitation of the gold and the remainder of the silver will proceed without inconvenience on the zinc.

Precipitation of Gold by Zinc Thread from Dilute or Foul Cyanide Solution.—Alfred James states that the more attention that is paid to the close packing of the shavings in the zinc boxes the better the result. The function of the zinc being one of surface a well-filled compartment is more effective than a half-filled one. The zinc should be in long, tough, thin threads, light enough to ignite readily and tough enough not to disintegrate easily into a slime. The boxes which do the best work have compartments of which the depth is greater than any other dimension. Even under the best conditions solutions which are charged with alumina salts and those containing acid iron salts give trouble. It has been found, however, that by giving them longer contact with the zinc they

---

* U. S. Patent No. 592,153, Oct. 19, 1897.

may be treated successfully. With the solutions of which the alkalinity has been neutralized by acid salts it is advisable to add a slight amount of soda; even in the most difficult cases an alkalinity of 0.025% has been found effective. The amount of alkali added should be kept as low as possible to avoid any great excess beyond the amount required to neutralize the acidity of the ore and for zinc box reactions. The presence of alkali or alkaline carbonates in mill solutions interferes with the silver nitrate test, making the solution appear to be stronger in available cyanide than is really the case. The effect of caustic potash or soda on double cyanide of zinc and potassium is not to regenerate all the cyanide of potassium as shown by the silver test, the test as suggested by C. G. Ellis being rendered unreliable by the silver throwing out the zinc from the double cyanide, and the zinc so displaced being dissolved by the caustic potash present, thus prolonging the titration.

Zinc vs. Electricity for the Precipitation of Cyanide Solutions.—John Yates in a paper read before the Chemical and Metallurgical Society of South Africa deals comparatively with the methods of precipitation of gold from cyanide solutions by zinc and electricity. The strong solution in general use with zinc is about 0.3%, and the weakest about 0.08%. Under ordinary conditions 1 dwt. per ton is accepted as the highest value compatible with careful work in the outflow from the zinc boxes, while it is not unusual to have the assay as low as 0.5 dwt. With electrical precipitation the strong solution is about 0.1% and the weakest 0.01%. After precipitation the solutions assay from 0.5 to 1 dwt. In this respect, therefore, there is little to choose between the two methods. There is no question as to the advantage of the electrical process in the treatment of slimes in which excessively dilute solutions of cyanide are used; the strongest solution at the Crown Reef slime works is 0.008%, the washings being proportionately weak. Zinc would not give satisfaction with such solutions.

At the May Consolidated works the average extraction in 1895 was 79%; at the Worcester works, 73.7%; at the Metropolitan works, 69.3%. These works use the Siemens-Halske process. Of works using the ordinary process: at the Meyer & Charlton the extraction is about 72%; at the Geldenhuis Deep, 72.5%; at the Crown Reef, 80 to 85%, and at the Treasury over 80%. From this it appears that the highest extractions on the Rand are being obtained with the stronger solutions and zinc precipitation.

The loss in cleaning up with the Siemens-Halske process is thought to be about 0.25%. With zinc precipitation it is generally accepted as being about 1%, though Mr. Yates considers that 0.5% would be a more reasonable assumption. In neither case is it possible to arrive at precise figures. In the matter of labor there is considerable difference between the two processes. The Siemens-Halske requires the services of an electrician. The cutting up of the lead sheets is tedious owing to their great number and is comparable with the turning of zinc shavings. This new form of cathode necessitates much more labor than the old sheet form. A clean-up is made every six or eight weeks. The auriferous lead is melted and cast into bars which are shipped to a central works for cupellation. The zinc boxes, on the other hand, require comparatively little attention and may be cleaned up much more frequently.

As to the cost of the two methods, Mr. Yates gives the following figures: Worcester works (1894), Siemens-Halske process, 2s. 11.45d.; same works, average for year ended June 30, 1895, 3s. 6.9d.; Metropolitan mine, Siemens-Halske, year ended June 30, 1895, 3s. 4.5d.; May Consolidated mine, Siemens-Halske, average for 1895, 3s. 2.854d., including 3% royalty; Crown Reef works, zinc precipitation, average for the twelve months ended March, 1895, 2s. 11.473d.; Geldenhuis Deep, zinc, July, 1896, 2s. 7d.; Geldenhuis Estate & Gold Mining Co., zinc, July, 1896, 2s. 6.24d.; Robinson, zinc, June, 1896, 2s. 7.25d.; City & Suburban, zinc, August, 1895, 2s. 3.608d. The average consumption of cyanide at the Worcester works during 12 months, was 0.28 lb. per ton, and for eight months at the Metropolitan, 0.39 lb. per ton. Plants using zinc precipitation experience a consumption of 0.4 to 0.8 lb. of cyanide per ton of tailings treated. Mr. Yates' conclusions are that the Siemens-Halske process has no advantage in South Africa over the ordinary cyanide process, except in the treatment of slimes.

Smelting Cyanide Bullion.—Arthur Caldecott recommends that the contents of the crucible be poured into a pot with a tap-hole a couple of inches above the bottom. When the surface of the slag has solidified, the pot is tapped and the still molten slag inside is drawn off. This slag will be nearly free from prillions of gold. The shells are remelted.

Slimes Treatment in South Africa.—Practice at several mills of Johannesburg has demonstrated that the admixture of a small percentage of slaked lime with the slimes is a complete preventive of muddiness in the mill water. About 5.5 lb. of slaked lime are added to the slimes pulp for every ton of solid slime contained, and within 2½ hours a large proportion of the water contained in the slimes pulp is delivered back to the mortar boxes clarified from all sediment.

As the slimes leave the tailings plant at the Bonanza mine it receives a supply of slaked lime, fed into the launder which conveys the pulp to the spitzkasten. The spitzkasten (of 15 compartments) measures about 25 × 15 × 5 ft. The clarified discharge, from the end of the spitzkasten flows back to the mill, while the product of the lower discharge runs into a circular vat with peripheral overflow. The settling of the pulp is accomplished in about 2½ hours, where without the lime it would not take less than 12 hours.

After settling, the clear supernatant water is decanted off from the vat and finds its way back to the mill-service, and the concentrated slimes are pumped into agitators, where the KCy solution is mixed (at a strength of from 0.006 to 0.008, equal to a consumption of about 0.2 lb. KCy to the ton of solid slimes) with the charge and agitated by revolving arms. In about four hours most of the gold is dissolved, and the charge is pumped into a settling tank, whence the auriferous solution is decanted to the intermediate clarifying tanks. These are two in number, the lower one containing a sand filter which removes every trace of turbidity. The pellucid auriferous solution is then delivered at the precipitation house for electrolytic precipitation. The muddy deposit left behind in the settling tank is then treated with a weaker cyanide solution, known as the first wash; about 600 tons of this solution are used daily at this plant, of which one-third reaches the precipitation house and two-thirds are sent to the tailings plant—where it is used in the preliminary washing of the sands to be cyanided.

This process is so successful that there is not the reason which formerly existed for preventing the creation of slimes in milling. Under the old milling method, screens of 20-mesh were used to prevent creation of slimes. Under the present method, 32-mesh screens are used and a larger percentage of the gold is caught in the battery boxes; the sands cyanided are finer, and a larger percentage of the locked-up gold is attacked by the cyanide solution; the proportion of slimes in the mill pulp is 30% now, where 20% was formerly the rule.

At the Crown Reef works, in November and December, 1896, the assay of the slimes treated was 0.24 oz. per ton, and the cost of treatment $1.045, of which 7.5% was for royalty. The extraction was 64%. The cost worked out to the tonnage milled was 18c. per ton and the gold recovery 44c.

The Bromo-Cyanide Process.—H. Livingstone Sulman and Frank L. Teed have recently given an account of the present development of the bromo-cyanide process of gold extraction.* This process involves the chemical reaction:

$$CyBr + 3\ KCy + 2\ Au = 2\ KAuCy_2 + KBr.$$

Assuming that this reaction is correct, the process is quite distinct from the cyanide process, since no oxygen is required. The advantage of the bromo-cyanide solution over the ordinary cyanide solution is claimed to be its great superiority in "potential" cyanogen.

The amount of cyanogen bromide in solutions is determined quantitatively by mixture with an excess of potassium iodide and acidification with hydrochloric acid, whereby iodine is liberated according to the following equation:

$$BrCy + 2\ HI = HBr + HCy + 2\ I.$$

The liberated iodine is determined by sodium thiosulphate in the ordinary manner. Excess of cyanide does not interfere with the reaction notwithstanding the statement in text books that iodide cannot be detected in the presence of cyanide by means of chlorine or bromine.

The bromo-cyanide process is now in practical operation at the Day Dawn mine in Western Australia where battery tailings from a free milling ore are treated, and at Deloro, Ontario, Canada, where an arsenical pyrites, often assaying more than 40% arsenic, is beneficiated without preliminary roasting. At Day Dawn the ore is crushed to pass a 25 to 30-mesh sieve. At Deloro it is crushed to pass a 30 to 40-mesh sieve. In both places the crushed ore is dumped directly into the leaching vats. Each plant has a nominal capacity of 50 tons per diem.

In the leaching department these works do not differ essentially from an ordinary cyanide works, the only addition being a tank for making up the bromide of cyanogen solution, which at ordinary temperatures may have a strength of 7 to 8%. In running the solution upon a charge of ore the bromide of cyanogen solution is added to the ordinary cyanide solution. An excess of the former is to be avoided, since the potassium bromide does not survive the passage through the zinc. Speaking generally the amount should not exceed one-quarter of the weight of potassium cyanide present.

At the Day Dawn mine the time of extraction is 14 to 15 hours. At Deloro it

---

* *Journal of the Society of Chemical Industry*, Dec. 31, 1897, pp. 961-970. The authors are the inventors of the process described.

is 30 to 40 hours. At the former only one solution is used, averaging 0.1%, or less, of potassium cyanide, with a proportionate amount of potassium bromide. At Deloro two liquors are used; the strong with 0.2 to 0.25% potassium cyanide and the weak with 0.1%, each with the requisite addition of bromide of cyanogen. At Day Dawn there is a consumption of 4 oz. of potassium cyanide and 1.75 oz. of cyanogen bromide per ton of ore; at Deloro 1 lb. and 0.33 lb. respectively. The percentage of extraction in each case is said to be about 90.[*]

In endeavoring to ascertain the minimum amount of cyanogen bromide necessary at the Day Dawn mine the quantity was once reduced to 0.75 oz. per ton of ore, when of course the solution was approximately the same as the cyanide solution used in common practice. After two days the extraction was still imperfect, but on addition of the remainder of the bromide of cyanogen it was completed in a few hours. This experiment is mentioned by the authors as illustrative of the advantage of bromide of cyanogen as an accellerator even in the case of tailings from a clean quartz ore. In treating the Deloro ore it is the custom to make one batch of liquor extract four or five charges of ore before precipitating the gold from the solution.

The gold is precipitated from the solution by means of zinc fume in a special apparatus known as the precipitation cone, which is made of galvanized sheet iron, about 5 ft. in diameter at the top and of similar depth. Two cones are placed in series, one about 2 ft. above the other. Around the top of each there is a circular gutter to collect the overflowing liquor which runs from the first cone to the second and from the second to the sump for gold-free solution. The gold-bearing solution enters the first cone through the bottom and is distributed by means of a small perforated inverted cone-nozzle, inside of which there is a valve arrangement to prevent any backward flow of zinc emulsion when the cones are stopped. The bottom is also provided with a three-way cock, which either permits the inflow of liquor for precipitation or shuts this off to permit the discharge of the gold-impregnated zinc fume, as desired. The zinc fume is added in the form of an emulsion through a small funnel in the center of the cone, which is enlarged at the lower end for the purpose of producing a sort of vortex chamber at the bottom of the zinc cone, which insures a more thorough admixture of the zinc-fume emulsion with the inlet liquors.

Assuming the cones to be full of gold-free liquor and the gold-bearing liquor from 100 tons of tailings to require precipitation, the routine is as follows: the gold-zinc-fume from cone No. 1 is removed for clean up; the partly used gold-bearing fume from cone No. 2 is transferred to No. 1 and a charge of about 12 lb. of fresh zinc fume in an emulsion with water is run into cone No. 2. The gold-bearing liquor is now run through the series at the rate of 400 to 600 gal. per hour. The zinc cone automatically grades the zinc particles so that the heavier are in the richest gold-bearing stratum and the liquor in rising through the cone, as it becomes poorer in gold contents, meets finer and finer suspended particles of zinc; but inasmuch as these become weighted with gold after a time there is

---

[*] It is interesting to note that the same Deloro ores were treated by chlorination in 1883. According to a report by R. P. Rothwell to the lessees of the Deloro mine an extraction of 86.83% was realized in the treatment of the first 1,045.6 tons chlorinated in the works. The treatment of 40 tons of concentrates in December, 1884, gave an extraction of 96.19%. Chlorination and precipitation cost $4 per ton in 1883. These costs would now be much less.

a tendency for them to be withdrawn from the top zone of slow upward travel, and it is consequently advisable to add every hour or two about 1 lb. of dry fume in emulsion through the central funnel.

The consumption of zinc fume at Deloro from October 1 to October 28, 1897, averaged 0.54 lb. per ounce of fine gold recovered. No trouble has been experienced in keeping the fine zinc from going into the overflow launder. The gold-free solution runs to a sump, whence it is pumped to the storage tank and after standardizing is ready for use again. It has been found possible to reduce in the cones solutions assaying 1 oz. gold per ton to 3 grains, and commonly the overflow solution does not exceed 10 grains per ton. In Canada, however, the practice is not to precipitate closer than 1 dwt. per ton. The Deloro liquor assays from 2 to 3 oz. per ton.

After the solution to be precipitated has passed through the cones the gold-zinc fume is drawn off through the three-way cock, and drained on a calico filter. It is then mixed with some soluble carbonaceous substance, such as flour, starch, or molasses together with a little borax and dried at a gentle heat. The dry cake is then broken into lumps about the size of walnuts and charged into a graphite retort in a furnace practically the same as those used by refiners of gold and silver in distilling their zinc crusts. The object of the addition of carbonaceous matter is to prevent loss of gold mechanically. In the retort the cake becomes carbonized and the zinc-gold contents are held bound together, though in an open spongy condition, by a fine carbonaceous skeleton. In the distillation of large charges of zinc-gold fume, say 1,500 lb., the zinc and zinc oxide collected in the condenser shows constantly only slightly over 1 oz. gold per ton, or a total loss of less than 1 dwt. on a charge of 1,500 lb. of precipitate carrying 20% gold, which is considerably less than 0.1% of the gold present in the precipitate. In carrying out the distillation at Deloro a 55-lb. charge of precipitate containing 70 oz. of gold is mixed with 12.5 lb. sugar and 1 lb. borax. The coal required for complete distillation is about 300 lb. and the time 10 hours. The ingot cast direct from the retort contains 64 oz. gold, the 6 oz. remaining being in the few pounds of slag left which one smelting in a No. 35 crucible recovers. The coal for slag smelting amounted to 1 cwt. so the total consumption is 4 cwt. or $1. The total cost of this clean up, not including labor, is $4, and it is estimated that on the present scale of work at Deloro it costs a little less than 6c. per oz. of fine gold recovered. So far about 1,300 tons of arsenical pyrites has been treated at the Deloro mines. The bullion produced contains about 69% gold, and 25 to 28% zinc.

The advantages claimed for the bromo-cyanogen process are: (1) Rapidity of extraction; (2) applicability to refractory ores hitherto beyond the reach of any process; (3) efficiency of the method of gold precipitation; and (4) simplicity of the clean-up.

As to these claims, the first two are easily demonstrable by a comparative test on the same ore under similar conditions. This does not yet seem to have been done, at least not on a large scale and by a disinterested metallurgist. As to the third claim, it cannot be averred rightly that this is a special advantage of the bromo-cyanogen process, since zinc fume has been used experimentally for the precipitation of gold from ordinary cyanide solutions; the apparatus of Messrs.

Sulman & Teed is more or less novel, however, and with it the method of precipitation appears to be efficient. The clean-up is simple, no doubt, but the system is equally applicable to the ordinary zinc-box precipitate. Indeed it was one of the methods originally proposed for the treatment of the latter. The furnace which it requires is considerably more expensive than an ordinary melting furnace, and this probably in conjunction with the fear of a high loss of gold in distillation has prevented a previous trial of the method. The apparent necessity in this process of using gold-bearing liquor as lixiviant for several charges of ore, with enrichment each time, before precipitation is obviously a disadvantage.

The Pelatan-Clerici Process.—D. B. Huntley describes the application of this process at the De Lamar mill, Idaho. The ore of the De Lamar mines is an oxidized quartz and quartz porphyry containing 15 to 20% of clay. There are practically no sulphurets in the ore, careful panning yielding less than 0.5% concentrates. The ore amalgamates raw to about 40 to 50%. The addition of salt and bluestone in the pans increases the percentage. With the high-grade ore ($30) of the early days of the mine, upward of 80% was recovered, but with the present ore ($15 or less) only about 70% was saved. From two-thirds to four-fifths of the value is in gold, which occurs in very fine particles.

A Pelatan-Clerici process plant of 50 tons per day capacity was put in operation June 6, 1897. On July 1 a clean-up showed a yield of 70.1%, 871.3 tons of ore, averaging $12.15 in gold and $3.02 in silver having been worked. The average tailings assay was $2.32 in gold and $0.62 in silver. The apparent extraction consequently was 80.62%. The large discrepancy was attributed to absorption of gold by the new apparatus, which hypothesis was probably correct, since the apparent and actual extraction subsequently agreed more closely.

The machinery consisted of 10 stamps, one 5-ft. Huntington mill and self-feeder, five circular wooden agitator vats 8 ft. deep and 8.5 ft. in diameter, 10 circular wooden precipitating vats 4 ft. deep and 8.67 ft. in diameter, one ordinary clean-up pan, one dynamo, one 15 h. p. engine to drive the dynamo, and one 60 to 70 h. p. engine for the remainder of the machinery.

The precipitating vats had a copper plate covering the entire bottom, with cement around the edge to prevent leakage of quicksilver under it. The pulp was agitated by a vertical shaft with four arms driven by spur gear. On the lower part of each arm there was a sheet of wrought iron ¼ in. thick, 14 in. wide, and 4 ft. long, which formed the anode plate whence the current passed. Each vat was charged with about 600 lb. of quicksilver, this being enough to cover the bottom 0.5 in. deep. There was a 2-in. opening in the copper plate to a 2-in. pipe with an iron valve, the hole being stopped with a rubber plug during operations. This served to draw off the mercury at clean-up time.

In the operation of the process the ore was crushed with as little water as possible; about one ton of ore to one ton of water, which with De Lamar ore makes a thick batter. This ran, and was scraped by a chain conveyor, through a trough into one of the agitator vats, where it was kept in slow motion until drawn off to a precipitating vat, where the chemicals were put in. These consisted of 2.5 to 3 lb. of cyanide and 6 lb. of salt per ton. The charge was kept in motion in this vat about 20 revolutions per minute for 11.5 hours. A charge was counted as 2.5 tons, making the capacity of one vat five tons per 24 hours. During the agitation the current of electricity passed down the agitator shaft to the anode plates and through the few inches of liquid to the quicksilver, decomposing the solution of cyanide and precipitating the gold and silver on the mercury, where it was immediately amalgamated. At the end of 11.5 hours a 4-in. gate valve in the side of the vat, a few inches above the bottom, was opened and the exhausted pulp was drawn off. No extra water was used to wash out the remainder, the valve being closed and the new charge run in immediately. The plant required two men per shift, not including the battery and Huntington mill man.

A clean-up was made twice a month, to prevent the mercury becoming too rich, which seemed to make higher tailings. In cleaning up, two extra men were required. After a charge was drawn off clear water was turned into the vat to wash out the residue, excepting the few buckets of sand, which would remain. The sand, water, mercury, and amalgam were then drawn off to the clean-up pan, where it was worked in the usual manner. The clean amalgam, after retorting and melting, furnished bullion about 950 fine in gold and silver.

If the pulp was not thick enough and fine enough, a layer of sand formed on the surface of the quicksilver, which seemed to prevent the deposition of the gold and silver. The Huntington mill crushed about 30 tons of the ore per day through a 30-mesh screen, while the 10-stamp battery, at 95 drops per minute, crushed about 20 tons. The loss of quicksilver for the 871.3 tons of ore treated in June was 281 lb. As compared with pan amalgamation at De Lamar, the Pelatan-Clerici process was cheaper and gave a higher salvage of value.

In July the percentage of bullion recovered was 75.91; in August, 77.76; in September, 68.70; in October, 72.98; in November, 73.48. The amount of ore treated in July was 1,345.5 tons; in August, 1,303.5; in September, 1,241; in October, 1,190; in November, 1,260.7.

The Pelatan-Clerici process was in operation at the De Lamar works until February 6, 1898, when it was given up. I am informed that it was not wholly a failure, but it seemed that better results might be obtained by another method. It gave a slightly better extraction than pan amalgamation, which had been previously employed for the treatment of these ores, and at a slightly decreased cost. The chief difficulty was in the solid precipitation on the cathode at the bottom of the vat, whence the amalgam could not be easily scraped. In making the final clean-up of these plates for 10 vats over $9,000 was secured. It was found that owing to some obscure cause the copper plates were corroded so that quicksilver could escape into the bottom of the vat. This difficulty was remedied by using cement bottoms in the vats with sumps to collect the quicksilver.

After considerable experiment it was decided to substitute ordinary cyanide lixiviation for the Pelatan-Clerici process. The ore is passed only through a rock breaker and is then deposited 3.25 to 4 ft. deep in vats having a capacity of about 25 tons. With a 0.25% cyanide solution the leaching requires about four days and gives about the same extraction as was formerly secured by the Pelatan-Clerici process. The vat lixiviation is of course considerably more simple and is probably cheaper. The experiments at these works where three different processes have been tried on a large scale on the same ore are highly interesting. Although the results have been rather unfavorable to the Pelatan-Clerici process it is not unlikely that there are certain ores, especially those of a very slimy character, for which it may be well adapted.

The Pelatan-Clerici process at the Carrie mines at Breckenridge, where it was put into operation in 1897 on ore averaging about $8 gold and $2 silver per ton, is said to recover 85% of the value, the loss being for the more part in silver. This ore is very clayey and contains the gold in a very fine state of division. In stamping and amalgamation the recovery on the plates was very low.

The Keith Mercurio-Cyanide Process.—Arrangements have been made to use this process at the Pestarena gold mines in Val Anzaca, Italy. The process employed at these mines heretofore has been amalgamation in arrastras, whereby an extraction of about 1.4 oz. per ton, or 88% of the assay value of the ore, has been effected. It is said that the Keith process has already been tried on the tailings, which contain a large amount of arsenopyrite, on a practical scale with good results.

The Keith process consists in adding a certain amount of cyanide of mercury to a solution of cyanide of potassium. The best results are said to be obtained with 0.05% of potassium cyanide and 0.025% cyanide of mercury. In the recovery of the gold from the solution the gold and mercury are deposited by electrolysis upon amalgamated copper plates. The anode is placed in a separate compartment and is surrounded with a solution of an alkaline salt. The current employed has a tension of 0.5 volt and a density of 0.06 ampère per sq. ft. of depositing surface.

Andreoli's Electro-Cyanide Process.—E. Andreoli states that the treatment of 100 tons of solution per 24 hours involves a circulation of almost 70 liters per minute. A system must be adopted which permits a constant and perfect contact of the electrolyte with the plates, which must not be too far apart, while the electromotive force must be as low as possible. He recommends the use of anodes of lead coated with peroxide of lead. These are prepared by immersing lead plates in a solution of plumbate of soda, which after withdrawal are washed and placed in a strong cyanide of of potassium solution, where under a heavy current they become hard and have a good crystalline appearance. The electrolytic vat has in its bottom two grooves filled with mercury, in which the cathodes (amalgamated, perforated copper plates) stand, doing away with terminals and connecting bars. The tank contains 50 cathodes and five or six anodes. Objection having been raised to these cathodes on account of too much trouble in cleaning up, Andreoli has substituted iron plates, to which gold adheres much better than to any other metal. To recover the gold from these cathodes they are dipped for about one minute in a bath of molten lead, which takes up the gold, the lead being subsequently cupelled in the ordinary manner. Butters has recommended the use of similar cathodes in the Siemens-Halske process. The Rand Central Reduction Co., of which Mr. Butters is general manager, has purchased the Andreoli precipitation patents for South Africa.

A Cheap Cyanide Plant.—A writer in the *New Zealand Mining Standard* gives the following account of a cheap cyanide plant from which satisfactory results were obtained: The tailings to be leached were from an arrastra and extremely slimy. The vats were very shallow, being 2 ft. deep and 12 ft. square.

The first solution was added slowly from the bottom, and care having been used in putting the material into the vat lightly, without tamping, but little tendency to settle was found as long as the surface of the solution or wash water did not fall below the level of the top of the tailings in the vat. The vats consisted of a row of seven boxes, 2 ft. deep and 12 ft. square, braced from the outside every 4 ft., surfaced with lumber, 1¼-in. stuff being used throughout, but no extra precaution being taken in the construction beyond thorough nailing. Over the cracks strips of canvas 3 in. wide were laid on top of a streak of hot (but not boiled) asphalt. A sheet of canvas of medium weight, 16 ft. square, sewed with double seams, was then laid down in the vat and folded up in the corners, the side next the board being covered with a good layer of hot asphalt just as it was laid, causing it to stick fast to the wood throughout. The upper edges were tacked to the vat—no other tacks being put through the canvas. The inside of the canvas lining was then thoroughly asphalted, with special care about the corners. The vat floor inclined 1½ in. in 12 ft., both east and north. In the northeast corner, 1 ft. from sides, the floor had been cut ¾ in. deep in a saucer-shaped depression, and a hole for a 1¼-in. pipe bored. This was put in through a hole in the canvas and bolted tight in hot asphalt with 3-in. washers on the canvas and on the plank below. Filters were of double burlap on 1-in. square strips, 1 in. apart, laid diagonally on the canvas bottom to within 6 in. of the sides—these held in place by canvas strips tacked across. Four strips 1×4×11 ft. 6 in., cut at 45° angle on corners, were laid around the bottom of the vat, a small roll of burlap being tacked to the thin under side, which stuck to the still warm asphalt. To these strips was fastened the burlap. The outlet pipe was bent at right angles 3 in. below the vat. A short piece of hose was wired on it, and into the end of the hose was pushed a wooden spigot, which drained directly into a 2×4-in. launder running alongside the vats to the zinc-house. This launder was lined with a strip of asphalted canvas, and covered tightly except at the spigots. The same method of preventing leakage by means of asphalt and canvas was used in the construction of zinc boxes and solution tanks, the latter being built on the same general plan as the vats.

The Waihi Reduction Works, New Zealand.—Previous to May, 1894, all the ore was beneficiated by pan amalgamation; since that time the cyanide process has been used exclusively. The works have 90 head of stamps. The leaching plant consists of 24 wooden vats of a diameter of 22½ ft., each vat being charged with 30 tons of ore crushed dry through a 30-mesh screen. With the amalgamation process used formerly about 66% of the value of the ore was recovered. By the cyanide process about 90% is saved, the actual recovery in 1896 being 89.68%. The ore is first roasted in kilns, then passed through a Gates crusher, from which it is trucked to the ore bins, passing thence through automatic ore-feeders to the stamps, from which it is carried to the sand hoppers in the tank shed by spiral pipe conveyors.

Treatment of Zinc-Box Precipitate.—At the Treasury mine in the Transvaal the zinc-gold slime from the boxes is treated with concentrated sulphuric acid in a covered wooden tank. After the zinc has been dissolved so far as possible, boiling water is run in until the tank is filled, the contents being stirred in the meanwhile, after which they are filter-pressed and washed. The slime-cakes are dried in a closed muffle without stirring, and then melted into bars in the usual way. The charge for the crucible consists of borax 5 parts, soda 3 parts, and dried slime 10 parts. In the treatment of 1,575 troy oz. of dried slime there were produced 48 lb. of slag, 446.81 oz. fine gold, and 55 oz. fine silver. The bullion assayed 75.03% gold and 9.29% silver.

Temperature in Amalgamation.—Experiments at the Homestake mills in South Dakota showed that cooling the water used in the batteries increased the yield of gold, through a greater saving of the fine gold. Two batteries side by side were run upon the same ore, one with the water at 50° F. and the other with water at 60° to 70° F. Care was taken that the water used in these tests should be free from oil or grease.

The Russell Process.—The results at the Daly mill, Park City, Utah, since 1894, have been as follows:

1895.			1896.			1897.		
Tons Ore.	Assay.	Extraction.	Tons Ore.	Assay.	Extraction.	Tons Ore.	Assay.	Extraction.
22,898	36.08 oz.	93.84%	21,059	29.99 oz.	96.25%	6,070	25.97 oz.	97.75%

The closing of the mine August 1, 1897, explains the small tonnage for last year; the extraction was higher than usual, owing partly to the very thorough clean-up of the mill after the shut down. The most important innovation of late years has been the successful refining of the product at the mill into bullion 999 fine, by the Dewey-Walter process.

In treatment of tailings, the Bimetallic Mining Co. in Montana finished a very successful run on its large dump of old tailings. The leaching was done raw with the Russell solution, 400 tons per day, at a cost of $1.57, including hauling and royalty.

Mechanical Concentration in Connection with Chlorination.—The Colorado-Philadelphia Reduction Co. installed 20 Wilfley tables to rework about 30,000 tons of old tailings and also those which are being made currently at the rate of about 200 tons a day. These tailings are said to average $1.25 per ton. It is intended to concentrate about 75 to 1.

Assaying Old Graphite Crucibles.—A. F. Crosse describes the following method:* 10 g. of the finely powdered material is mixed with 35 g. of finely powdered manganese dioxide in an H crucible and heated to bright redness. The carbon is oxidized to dioxide and the manganese dioxide is reduced to monoxide, the excess of dioxide being converted into Mn_3O_4. The mass becomes caked in a solid lump at the bottom of the crucible. The temperature of the furnace is then reduced and 50 parts of potassium carbonate, 50 parts borax, 50 parts salt, 50 parts litharge, 2 parts flour, and 20 parts silica are added. The resulting lead button is recovered and cupelled in the ordinary manner. Owing to the irregular character of the material Mr. Crosse recommends that the mean of four assays be taken.

Gold and Silver Assaying at Guanajuato.—The practice is peculiar in the use of cylindrical crucibles from 0.75 in. to 2 in. in diameter and 7 to 9 in. in length,

---

* Proceedings of the Chemical and Metallurgical Society of South Africa, Sept. 18, 1897.

the side tapering from 0.125 in. in thickness at the top to 0.25 in. at the bottom. the bottom being 0.5 to 1 in. thick. The crucibles 2 in. in diameter take from 20 to 30 g. of ore while the 1.25 in. size is convenient for 10 g. The fusion is made in a wind furnace.

Estimation of Cyanogen by Silver Nitrate.—William J. Sharwood, in the *Journal of the American Chemical Society,* Vol. XIX., pp. 400–434, presents the results of an exhaustive study of the estimation of cyanogen by silver nitrate. The results cannot well be summarized, and reference should be made to the original article. This subject is of much importance in cyanide mill work.

Literature.—"The Chlorination of Gold Ores" was described by J. Dawson Hawkins in the *Journal of the Society of Chemical Industry,* 1896, pp. 336–339; "Accuracy in Silver Assays," by F. P. Dewey, *ibid.,* pp. 434–436; "Laboratory Testing in Connection with Gold Extraction," by A. W. Warwick, *ibid.,* pp. 182–184; "Notes on the Treatment of Refractory Low-Grade Gold Ores at the Ouro Preto Gold Mine, Brazil," by S. J. McCormick, *Transactions of the Institution of Mining and Metallurgy,* London, 1896–7, Vol. V., p. 116; "Notes on Milling at the North Star Mine, Grass Valley, Cal.," by P. R. Robert, *ibid.,* 1896-7, Vol. V., p. 153; "Gold Mining in Norway," by John Daw, Jr., *ibid.,* 1896–7, Vol. V., p. 212; "Some Economic Features in Connection with Mining on the Witwatersrand Gold Field, South African Republic," by Edgar P. Rathbone, *ibid.,* 1896–7, Vol. V., p. 53; "Additional Notes on the Treatment of Zinc-box Precipitate from the Cyanide Process," by T. H. Leggett, *ibid.,* 1896–7, Vol. V., p. 147; "Notes on the Treatment of the Gold Ores of the Guanaco Mineral District, Desert of Atacama, Chile," by G. M. Barber, *ibid.,* 1896–7. Vol. V., p. 99; "Practical Notes on Furnace Construction and Management," by Herbert Lang, *Engineering and Mining Journal,* January 30, February 6, February 20, 1897; "The Precipitation of Gold by Zinc Threads from Dilute and Foul Cyanide Solution," by Alfred James, *Transactions American Institute Mining Engineers,* Chicago meeting, February, 1897; "The Genesis of Auriferous Lodes from a Chemical Point of View," by John R. Don, *ibid.*; "Discussion of Professor Christy's Paper on the Solution and Precipitation of Cyanide of Gold," by Alfred James, *ibid.*; "The Potsdam Gold Ores of the Black Hills, S. Dak.," by F. C. Smith, *ibid.*; "The Randsburg Mining District, Cal.," by F. M. Endlich, *Engineering and Mining Journal,* February 27, 1897; "Applications of the Cyanide Process in South Africa," by Charles Butters, *ibid.,* March 6, 1897; "Notes on By-Products in Gold Milling," by Charles Butters, *ibid.,* December 11 and 18, 1897.

"Gold in the Dutch East Indies," by Reinier D. Verbeek, *ibid.,* April 17, 1897; "The Stamp Milling of Gold Ores," by T. A. Rickard, p. 260. Scientific Publishing Co.; "L'Or en Siberie Orientale, Vol. I., Trans-Baikal, Vol. II., the Amour Province," by Edouard David Levat, pp. 202, 470; "Notes on Sump Solutions, Extractor-Box Work and Cleaning up in the Cyanide Process," by Alfred James, *Engineering and Mining Journal,* September 11, 1897, p. 307; "Roasting Previous to Cyaniding," by Wallace MacGreggor, *ibid.,* August 14, 1897; "The Camp Floyd Mining District and the Mercur Mines, Utah," by R. C. Gemmell, *ibid.,* April 24 and May 1, 1897; "The Segovia Gold Region of Nicaragua," by H. H. Miller, *ibid.,* September 18, 1897; "Canada's Newest

Gold Field (Michipicoton)," by J. T. Donald, *ibid.*, September 25, 1897; "Notes on the Action of Potassium Zinc Cyanide Solutions on Gold," by W. J. Sharwood, *ibid.*, October 2, 9, 16, 1897; "The Southwestern Extremity of the Appalachian Gold Fields," by W. B. Phillips, *ibid.*, October 2, 1897; "The Porphyry Dyke Mines of Montana," by L. A. Sisley, *ibid.*; "Cost and Profits of Gold Mining in South Africa," *ibid.*, October 9, 1897; "Information Respecting the Yukon District," by Wm. Ogilvie, Ottawa, 1897, p. 65; *Mineral de Pachuca*, Nos. 7, 8, 9 of the *Boletin del Instituto Geologico de Mexico*, p. 183; "The Gold Fields of the Rainy River District, Ontario," by H. W. Winchell, *Engineering and Mining Journal*, October 23, 1897; "A Preliminary Report on the Michipicoton Mining Division," by Arthur B. Willmott, *Bulletin No. 3, Ontario Bureau of Mines*; "Some Notes on Hydraulic Mining," by A. J. Bowie, *Engineering and Mining Journal*, October 30, 1897; "Cyaniding Sulphide Gold Ores," by R. Reckmagel, *ibid.*, November 13, 1897; "Gold Dredging in Montana," by E. B. Braden, *ibid.*, November 20, 1897; "Placers Auriferes de la Siberie Orientale," by Theodore Sabachnikoff and Edouard David Levat, p. 76; "The American Hill Placer Mine, Idaho," by Edmund Juessen, *Engineering and Mining Journal*, November 27, 1897; "The Michipicoton Mining District in Ontario," by Wilson B. Cue, *ibid.*, December 25, 1897.

RIVER DREDGING FOR GOLD.

River dredging for gold is a new development in the mining industry which has attained a good deal of importance during the last two or three years, and dredges are now working successfully in the United States, in Georgia, Montana, Idaho, and California. They have been especially successful in New Zealand. The amount of gold won in this manner in 1897 was considerable, and next year it is likely to be still greater, the success of the dredges now employed being well established, and there being undoubtedly a good many places where they can be put to work to advantage. The idea is by no means a new one. As long ago as 1885 a company was organized to exploit the bed of the Atrato River in Colombia in this manner, but owing to defective apparatus, or perhaps to some extent to mismanagement, the undertaking failed, although there is reason to believe that the bottom of that river is rich in gold.

The practicability of river dredging for gold was first demonstrated on the Clutha River in New Zealand. The original appliances were rude and imperfect. The current of the stream was utilized to supply the motive power, and consequently these "current wheelers," as they were called, could only work in the stream. They could not work under the banks or in still water. They were primitive spoon-dredges, and the fact that they gave profitable returns only testified to the richness of the deposits they were working. In 1889 Mr. Sew Hoy, a Chinese merchant in Duneddin, purchased a steam-dredge designed by L. O. Beal, Jr., which he placed upon the Shotover. The success of this undertaking led to the installation of dredges on the Clutha, Dart, Kawarau, Taidri and Mataura rivers and the ocean beaches and river flats known to be rich in auriferous sand. Many of these enterprises were unsuccessful because of the imperfection of their gold-saving appliances, and it subsequently proved profitable to work over the same ground with more modern machinery, it having been found in some instances that more gold was lost in the first washing than was recovered.

It is said that a yield of 1.23 grains of gold per yard (30 cwt. to the yard) of gravel, which is equivalent to one part gold in 19,000,000 parts of gravel, has been made to pay good dividends in Otago by gold dredging. In this case the dredge was driven by steam, using brown coal that cost 25s. 6d. per ton.

This method of gold recovery is applicable not only to the exploitation of river beds and alluvial ditches, but also to the working of shallow flats down to a depth of 40 ft., and it is especially advantageous in the latter where a large quantity of water has to be contended against.

The success of gold dredging in New Zealand led to the introduction of the machine in the United States, first in Montana, and subsequently in California and Idaho. In general the American dredges are of much greater power and capacity than those employed in New Zealand. The first dredge installed in Montana was designed about three years ago after the style of those working in New Zealand. It was built by the Bucyrus Co. and put to work on Grasshopper Creek, in Beaverhead County. The results of the first season were unsatisfactory, but with the knowledge gained thereby the dredge was rebuilt. After another rebuilding at the end of the second season, the results were entirely satisfactory. A suction dredge which had been built at the same place by the Chicago Mining and Development Co. was then remodeled by the Bucyrus Co., which installed two new plants at the same point in 1897, one of them for the Bannack Dredging Co. and the other for the Bon Accord Mines, Ltd. A description of the "A. E. Graeter," owned by the Bannack Dredging Co. has been given by E. B. Braden.*

This dredge is 102 ft. long and 36 ft. wide. It draws about 3 ft. of water. Its total weight is about 700,000 lb. There are two tubular steel boilers of the locomotive type, each of 125 h. p. capacity, and immediately behind them a set of engines which drive the buckets, move the dredge, etc. These engines are under the control of a man in a pilot-house on the upper deck whence he can observe all operations.

Directly in front of and below the pilot-house is a ladder on which an endless chain of 36 buckets for digging is worked, as shown in the accompanying engraving. The lower end of the ladder is adjustable as to depth in the manner shown so clearly in the engraving that no special description is necessary. At the upper end the ladder swings upon a 4⅜-in. shaft which also serves as the driving shaft for the elevators. The latter is driven by a 75 h. p. engine through sprocket and chain connection. The lower end of the ladder can be dropped so as to excavate gravel to a depth of 38 ft.

The elevator buckets and links are made of annealed Bessemer steel with the rim and other parts exposed to wear riveted on so that they can be renewed. The buckets have a capacity of 5 cu. ft. and travel at the rate of 14 ft. per minute. They discharge their contents into a hopper in passing over the upper pulley. The mixed gravel and water pass through a trommel 12 ft. long, 48 in. in diameter, inclined 3 in. per ft. and covered with sheet steel with 1.5 in. holes. The oversize escapes at the lower end into the water at the side of the dredge. The fine material drops into a second hopper which is swung below the water

---

* *Engineering and Mining Journal*, Nov. 20, 1897.

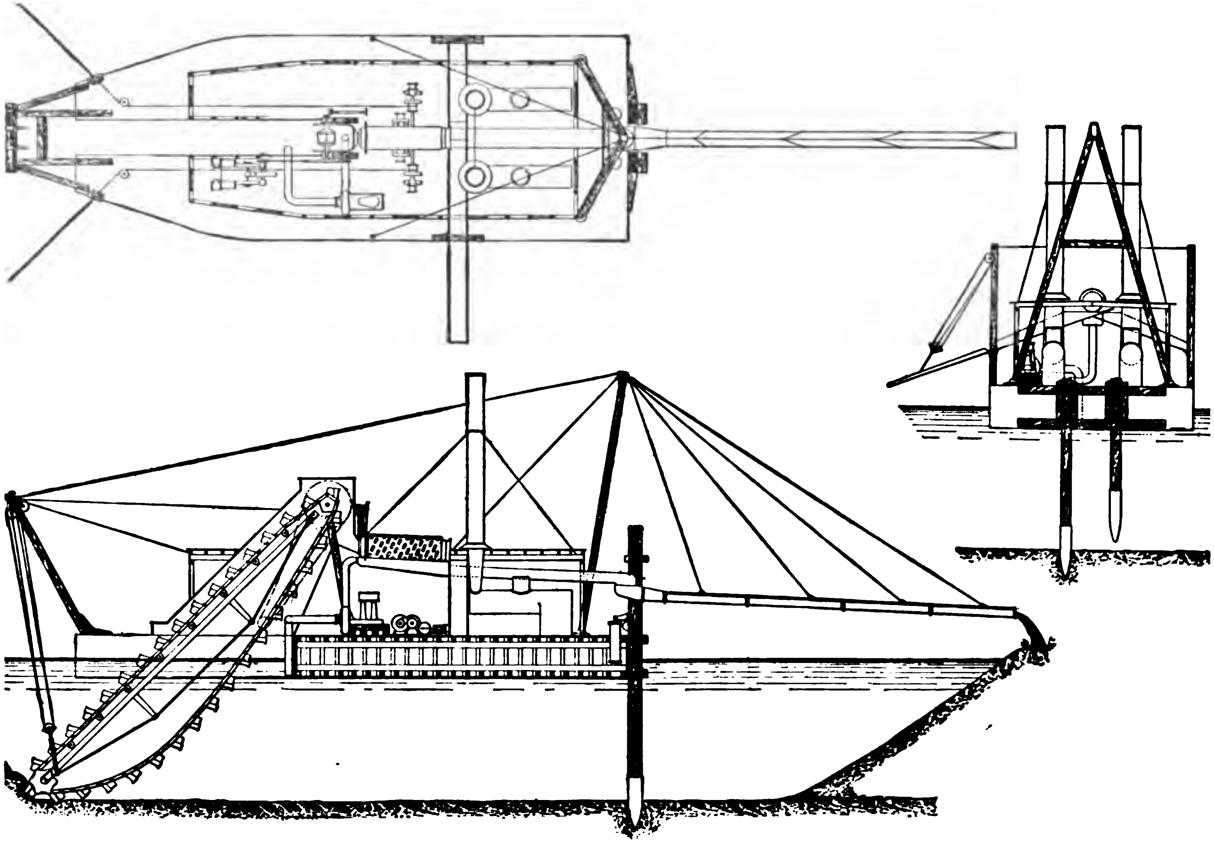

Plan and Section of Bucyrus Gold Mining Dredge.

level by chains near the center of the dredge. The point of this hopper connects with the centrifugal pump which discharges the pulp into a sluice-box placed on the upper deck. This pump, which is of the Prescott type, has a 15-in. suction, and running at a speed of 250 revolutions per minute has a capacity of 3,000 to 5,000 gal. per minute.

In passing through the pump the gravel suffers a final disintegration of any lumps of clay contained therein, and a complete freeing of the gold, so that 98% of the original contents of the gravel has been saved in the sluices. The dredge is also equipped with a Dean pump of large capacity which supplies water to the hoppers, trommel, etc.

There are two sluice-boxes. The first begins on the upper deck just back of the pilot-house; it is 30 ft. long, 30 in. wide, and 40 in. deep. It discharges into a lower sluice-box which is 56 ft. long and projects behind the dredge. These sluice-boxes are of steel, and are fitted with a false bottom of square steel plates separated about 3 in., so that the heavier gravel and stone which has been freed from all clean gold, do not pass over and cause excessive wear to the riffle-boards. The sluice which projects behind the dredge and weighs 36,000 lb. is suspended so that it can be swung laterally to deposit the tailings according to desire. Any list which might be occasioned thereby is balanced by filling with water one of the tanks provided for the purpose.

Preparatory to the launching of such a dredge a dam is built across the creek to impound sufficient water to float it. When operations commence the tailings are deposited behind the dredge which moves up the creek into the excavation or canal which itself makes. The dredge is equipped at the rear end with two spud timbers 42 in. × 18 in. × 50 ft., weighing somewhat over 11,000 lb. apiece. Each one is fitted with a steel point and the necessary gear for raising and lowering. These spuds serve to move the dredge forward or backward, being alternately raised and dropped after the dredge has been swung by the engineer, by means of the cables passing around the front corners of the boat, to a lateral anchorage. The boat is thus walked ahead. While excavating, one of the spuds rests in the gravel at the bottom and forms a pivot around which the boat is swung as the gravel is taken up. The lower end of the ladder is dropped about 6 in. with each swing of the dredge around the spud; thus with the drag of the bucket a segment of gravel 6 in. deep and 8 ft. wide is excavated. The lowering of the ladder continues until bed rock is reached. The bed rock if yielding is torn loose and brought up until barren of values.

The operation of such a dredge requires eight men per shift. The cost of working gravel with the "A. E. Graeter," where steam is employed, is 9c. per cu. yard, including labor, supplies, superintendence, and repairs. On the "F. L. Graves," where electricity is employed for power, the cost has been only 4.5c. per cu. yard.

A suction dredge was in operation in 1897 at Montana City, and another of the same type was at work on the Snake River, about four miles below Montgomery's Ferry, in Cassia County, Idaho. The latter boat is 105 ft. long and 20 ft. wide. The gravel is lifted by a rotary pump driven by a 75 h. p. engine, the suction pipe being 30 ft. long and 12 in. in diameter. There are two other engines, one of which serves to move the boat and the other to drive a scraper and elevator by which the coarse material is delivered at a point some distance behind the boat. The boat is worked to and fro across the river, the suction being kept against the bank of gravel as the boat works up stream. The gravel raised is delivered to a sluice, the upper end of which is about 6 ft. above the floor of the boat. The sluice is 80 ft. long and 4 ft. wide. The gravel passes first over a grizzly, where the coarse material is removed by a series of steel scrapers, delivering it upon a belt extending to the stern of the boat, where it drops again into the river.

The fine material is washed on burlap tables, of which there are eight on each side. They are 15 ft. long and 3 ft. wide, placed at right angles to the sluice and extending over the sides of the boat. The black sand and gold which gathers on and under the burlap is treated on amalgamated copper plates. The pump delivers 200 cu. yards of gravel per hour. The gravel which has been worked at this place is said to contain less than 10c. per cu. yard.

A dredge designed by Robert H. Postlethwaite, and built by the Risdon Iron Works of San Francisco, which is in operation on the Yuba River in California, is 100 ft. long, 23 ft. wide, and 5 ft. deep, with a well 5 ft. wide and 75 ft. long, running longitudinally in the center. The ladder, which is 67 ft. long, carries 37 buckets each of 3.5 cu. ft. capacity, discharging at the rate of 15 per minute. This dredge, which requires two men per shift, handles about 90 cu. yards per hour from a depth of 45 ft., with an expenditure of 37 h. p., of which one-half is required to pump the 3,000 gal. of water per minute for washing the gravel. The cost is said to be between 3 and 5c. per yard. The material dredged passes into a revolving screen, from which the fines go in a thin sheet of pulp over tables of large area. The method of moving this dredge ahead differs somewhat from that which is used in Montana.

Dredging for gold has also been undertaken on the Chestatee River, in the Dahlonega district in Georgia, where an ordinary scoop or dipper dredge is employed. The dipper is made as nearly water-tight as possible, so that in the time required to dump the load very little of its contents is lost. It discharges upon a grizzly, from which the fines pass into a sluice and are washed in the usual manner. The sluices are placed on a separate barge.

Usually the excavation by the dredge is carried down to the hard stratum called bed rock, and then from 1 to 2 ft. into this stratum. The maximum depth cut out is 14 ft. below the bottom of the river. The dredge is operated by eight men, four of whom are on the dredge and four on the sluice barge.

Dredging machines have also been introduced recently in Siberia, one being in operation at the Zeya placers in the Trans-Baikal. At this place a crude elevator-bucket dredge, of more or less the same type as those used in New Zealand and the United States, is employed in the exploitation of a low-lying placer, where the soil is yielding and marshy. In this work an excavation is first made. This is filled with water from the stream flowing near-by, and the dredge is then floated. Subsequently it works its way forward, dropping its tailings behind it in more or less the same manner as in the execution of similar work in the United States.

A land mining machine is used at Washington Gulch, Mont., in working a placer that is unusually flat and where but little water is obtainable. This machine works on the principle of the ordinary steam shovel. It is supported on four bogie trucks which move on double tracks 12 ft. apart, laid on the bed rock. The boom is 40 ft. long and carries a dipper of 1.25 cu. yards capacity which handles 70 cu. yards per hour.

In this gulch the bed rock lies 16 ft. below the surface. Above the pay streak there is a considerable overburden of barren material. This is stripped off and disposed at one side without washing. The pay gravel is then dug and dumped into a car running on an incline at the other side of the machine. One end of this incline rests on a shoe set in solid ground on the bank of the cut, and the other terminates on the roof of the dredge. The car when filled is raised to the roof of the dredge and dumped into a hopper. The gravel passes into a washer and trommel, where a complete disintegration is effected and the coarse rocks separated. The fine material passes into a sluice-box suspended by chains for regulating the grade, which extends some distance behind the plant. Near the end of the sluice-box there is a sand valve, which separates the sand and gravel from the water and drops them underneath. These form a dam, which prevents the water from entering the pit in which the plant rests and permits the bed rock to be kept dry. The amount of water required by this plant for all purposes is 20 miners' inches. The machine has made a cut 40 ft. wide and 16 ft. deep, moving itself ahead 7 ft. when desired. Eight men per shift are required, three of them being engaged in cleaning the bed rock by hand. About 1.5 cords of fir wood are burned per 10 hours. Steam is supplied by one 50 h. p. boiler.

OFFICIAL REPORTS OF GOLD AND SILVER MINING COMPANIES.

The official reports of gold and silver mining companies contain much valuable data as to the cost of gold and silver mining and milling in various parts of the world. In comparing these, however, it is necessary to make allowance for difference in the methods of making up the accounts; for instance, one company makes a separate entry for prospecting and dead work, while another debits directly all expenditure of this kind to the cost of mining. There is more uniformity in the mill accounts, and the comparative results of metallurgical practice as shown by the latter are particularly interesting.

Alice Gold and Silver Mining Co., Butte, Mont.—(Pan amalgamation.) In milling 25,702 tons of ore in 1897 the cost was $6.11 per ton, the average chlorination being 89.1% and amalgamation 90.3%. The loss of quicksilver per ton of ore was 0.42 lb. The cost of mining was $4.15 per ton.

Alaska-Mexican Gold Mining Co., Alaska.—(Stamp-amalgamation mill; tailings concentrated and chlorinated.) The amount of ore milled in 1896 was 101,702 tons, which yielded $245,862 at an expense of $184,212. Of the yield, 31% was from sulphurets collected by concentration and treated by chlorination. The cost of mining was $1.1411; milling and concentrating, 39.41c.; chlorinating 1,652 tons of sulphurets, 15.99c. per ton of ore milled; general expenses and carriage of bullion brought the total cost up to $1.8112. The average work per stamp was 3.57 tons. The concentrates were chlorinated at the works of the Alaska-Treadwell Gold Mining Co. at a cost of $10 per ton of 2,000 lb., 95.68% of their gold contents being recovered. Miners receive $2.50 per day and board; laborers, $2 and board.

Daly Mining Co., Park City, Utah.—(Ores treated by Russell process.) In 1896 there were 20,259 tons of ore mined and 20,327 tons milled. There were 24 tons of ore sold. The average yield of the ore milled was $20.46 per ton; the average value of the ore sold was $90.34 per ton. The yield of the mill ore in 1895 was $23.01, the falling off being due entirely to the lower price obtained for silver, since the grade of the ore remained about the same, namely, 37 oz. per ton. The total yield of the mine in 1896 was 714,373 fine oz. of silver and 862 fine oz. of gold. The cost of mining per ton was $10.21; hauling, $0.83; milling, $7.16; marketing, $0.29; prospecting, $1.92; general expenses, etc., $1.60; total, $22.01. The average receipt per ounce of fine silver was 69.66c., and the average cost 62.57c. The average percentage saved in the mill (Russell process) was 96.55. The total production of this mine up to the end of 1896 had been 270,002 tons of ore, from which there were obtained 11,158,930 oz. of silver and 11,203 oz. of gold. The selling value of this product was $9,451,662, out of which $2,887,500 had been paid in dividends.

De Lamar Mining Co., Ltd., De Lamar, Idaho.—(Ores treated by pan amalgamation.) During the year ended March 31, 1897, the product of the mine was 40,453 tons of milling ore, giving an average yield of $14.07 per ton, and 116 tons of ore averaging $373 per ton, which was sold to smelters. The total receipts were $615,726; expenses, $450,920. The amount of ore milled was 40,453 tons, assaying $14.07 in gold and $5.11 in silver per ton. Bullion returns gave 71.35% of its value. The production of gold was 18,558 oz.; of silver, 276,026 oz. The cost of mining was $5.30 a ton, to which 59c. per ton has to be added as the cost of mining and marketing the ore sold to smelters. The cost of milling was $4.94 per ton, of which $1.67 was for labor, $2.82 for chemicals and general supplies, and the remainder for insurance, carriage of bullion, etc.

Elkton Consolidated Mining Co., Cripple Creek, Colo.—(Ores sold in the general market.) The report for the year ending April 30, 1897, shows: Gross production, $609,711.31; net returns on ore (smelting and freight charges deducted), $520,890.25; net profits, $346,867.53.

Eureka Hill Mining Co., Tintic, Utah.—(Ores sold to silver-lead smelters.) The production in 1897 amounted to 1,915 tons of ore sold directly to smelters, and 58,487 tons dressed, the latter yielding 7,867 tons of concentrates. The mill ore averaged 3.5% lead, 0.5% copper, 20 oz. silver, and $1.25 gold per ton. About 75% of the lead and silver and 60% of the gold and copper were saved. The ore is crushed by stamping, the average work being 1.82 tons per stamp per 24 hours.

Fraser, Kalgoorlie, Western Australia.—(Stamp-amalgamation mill.) At the annual meeting of this company, November 13, 1897, it was reported that the total working costs during the previous year averaged £1 6s. 3.75d. per ton, divided as follows: Mining, 13s. 3.75d.; milling, 10s. 1d.; supplies, 1s. 10d.; head office, 7.25d.; general expenses, 5.75d. The production was 77,000 tons, yielding 46,700 oz. of gold, worth £175,000.

Gold Coin Mines Co., Gilpin County, Colo.—(Stamp-amalgamation mill.) The production in 1896 was 20,724 tons of ore, of which 1,450 tons ($85.07 per ton) were smelting ore, and 19,274 tons ($9.66 per ton) were milling ore. The total costs were $9.60 per ton, leaving a profit of $5.34 per ton. The cost of mining was $6.20 per ton, of which $2.47 was for breaking ore and tramming, $0.67 for hoisting, $1.14 for prospecting and dead work, and the remainder for general expenses. The cost of milling 5,358 tons at the Hidden Treasure mill was $2.42 per ton; the cost of milling 13,916 tons at the Kansas mill was $1.47 per ton; at the latter, labor came to $0.62, supplies, fuel, and water $0.55, and hauling $0.30.

Great Boulder Proprietary Gold Mines, Western Australia.—(Stamp-amalgamation mill.) The report for 1896 shows that the receipts from the mine were £223,705 and the expenses £46,777, leaving a balance of £176,928. Adding transfer fees, $395, and subtracting £9,781 for London expenses, a balance of £167,542 remained, from which dividends to the amount of £160,000 were paid, being 100% on the stock. There were 16,729 tons of ore from the mine treated, and 55,949 oz. gold obtained, equal to 52,592 fine oz., or 3.14 oz. per ton worked. The average return per ton worked was $65.07; while the expenses were: Mine, $5.25; mill, $5.27; general, $3.11; total, $13.63 per ton.

Harquahala Gold Mining Co., Harquahala, Ariz.—(Cyanide process mill.) The report of this company for the year ending June 30, 1897, covers the operations both in Arizona and Western Australia. From Western Australia there was nothing to report. At the Arizona mines the work consisted chiefly in treating the old mill tailings by cyanide lixiviation. The amount leached was 35,791 short tons, which yielded $74,278, or $3.22 a ton, the saving being 72% of the assay value. The cost of treatment in cents per ton was as follows: Cyanide of potash, 30.01; fuel, 16.88; lime, 0.59; zinc, 0.54; sundries, 0.97; tramway and engine repairs, 0.77; lubricants, 0.53; assay office, 1.81; freight, etc., 4.29; postage, etc., 0.87; stables, 6.85; total supplies, 64.11; superintendent and foremen, 7.48; shift-boss and helper, 6.42; assayer and melter, 3.13; engineers, etc., 7.79; firemen, 3.77; car and crushermen, 5.21; signals, etc., 5.50; stables, 5.65; total labor, 44.95; royalty, 10.00; water supply, 12.46; taxes, etc., 7.81; supplies, 64.11; total, 139.33.

The accumulation of sand in the dumps at the old mills has now been exhausted and there remains only the slimes, which are so fine that from 80 to 90% pass a 60-mesh sieve. A good deal of trouble has been experienced in the treatment of this material, the main trouble lying in the separation of the gold solutions from the slimy, sticky paste which is formed when the slimes are mixed with the cyanide solution. Consequently the leaching has to be carried out with very shallow charges, and even then consumes a good deal of time.

Hauraki Gold Mining Co., New Zealand.—(Stamp-amalgamation mill.) The production in 1896 was 4,425 tons, yielding 19,647 fine oz. Expenses were $30.89 per ton, leaving a profit of $60.88.

Homestake Mining Co., South Dakota.—(Stamp-amalgamation mill.) The report of this company for the year ending May 31, 1897, shows that there were milled a total of 395,530 tons of ore. Of this, 122,780 tons were treated in the 100-stamp mill, 226,750 tons in the 200-stamp mill, 21,475 tons in the Homestake mill, and 24,525 tons in the Golden Star mill. The total product was 110,851 oz. of bullion, the gross value of which was $1,840,674 in gold and $13,112 in silver, making a total of $1,853,786. Deducting bullion charges—amounting to $10,285—there was left a net return of $1,843,501. To this is to be added

$45,938, the net proceeds of concentrates during the year, making a total return of $1,889,439. The average return obtained per ton of ore was therefore $4.78. The total expenditure for all purposes except dividends was $1,702,965, or an average of $4.31 per ton. Excluding payments for property, the expenses were $3.74 per ton. The accounts show total receipts as follows: Balance on hand June 1, 1896, $263,455; bullion account, $1,889,439; miscellaneous, $35,867; total, $2,188,761. The disbursements were as follows: Milling accounts, $424,252; mining, $910,013; blacksmith shop, foundry, tramway, etc., $106,670; general expenses and taxes, $38,920; purchase of property, $223,109; dividends, $375,000; total, $2,077,964, leaving a balance on hand June 1, 1897, of $110,797.

Horn Silver Mining Co.—(Ores sold to lead smelters.) The production in 1896 was 5,449 tons of ore, averaging $12.93 per ton, which was sold to smelters, and 28,685 tons of low-grade ore, which was dressed down to 5,323 tons of concentrates, averaging $26.88 per ton. The contents of all the ore sold were 488,347 oz. gold, 323,398 oz. silver, and 4,476 tons of lead. The cost of mining was $4.51 per ton, of which $1.264 was for supplies and the remainder for labor; the cost of dressing was $1.526 per ton, of which $0.561 were for supplies and the remainder for labor.

Isabella Gold Mining Co., Cripple Creek, Colo.—(Ores sold in the general market.) The report for the year ending December 31, 1897, shows that 11,826 tons of ore were produced, which sold for $541,077. The cost of production was $464,969, not including taxes and general expenses, which came to $22,585. The cost of mining was $235,627; treatment of ore, $112,009; transportation of ore, $26,353; sampling, $1,182; payments to lessees, etc., $89,807. The cost per ton of ore mined by the company was $23.59, against $22.15 in the previous year, the increase being due chiefly to extra development work. The mining expense charged to the 9,992 tons of ore mined on company account was divided as follows:

	Labor.	Supplies.	Total.
Construction	$0.17	$0.78	$0.95
Maintenance	0.01	0.34	0 35
Surface	3.15	1.25	4.40
Underground	14.20	1.98	16.18
Mine office	1.50	0.21	1.71
Totals	$19.03	$4.56	$23.59

Lessees produced 2,520 tons of ore, netting an average of $56.48 per ton, of which the company received $20.84 per ton and the lessees $35.51. The average net value of all ore shipped by the mine in 1897 was $33.95, against $47.72 in the previous year.

Mammoth Mining Co., Tintic, Utah.—(Ores sold to lead smelters.) The production in 1896 consisted of 12,812 oz. of gold and 267,849 oz. silver, with lead and copper to the value of $51,960. The more part of the output was derived from low-grade ore, which was dressed. The mill was supplied with 38,500 tons of ore, which yielded $7.65 per ton. The cost of dressing was $1.01 per ton; mining, transportation, and other expenses came to $4.92 per ton. The total receipts for the year were $453,046.

Mercur Gold Mining Co., Mercur, Utah.—(Cyanide process mill.) The report for 1897 showed a total of 75,175 tons of ore treated at mill, yielding $486,382, or $6.47 per ton. Cost of mining, $1.36½; milling, 86c.; transportation, 35c. per ton; leaving a net profit of $3.89½. During the year the company paid $311,000 in dividends.

Montana Mining Co., Ltd., Marysville, Mont.—(Stamp-amalgamation mill.) The report of this company for the half-year ending June 30, 1897, shows total receipts of $151,382. The expenditure was $139,678, as follows: Working expenses, $68,807; taxes, insurance, etc., $5,318; prospecting and operating No. 1 shaft, $64,889; permanent improvements, $664. In May and June there were 6,820 tons of ore treated in the 50-stamp mill which yielded $80,278, or an average of $11.77 per ton. The yield included 6,659 oz. of gold, and 29,717 oz. of silver. The average expenses per ton for the time the mill was run were $9.04 per ton. The development work so far as carried out has given reasonable expectation of a large tonnage of ore carrying from $10 to $12 per ton from the mine.

Mount Morgan Gold Mining Co., Ltd., Queensland.—(Stamp-amalgamation mill; tailings treated by chlorination.) The operating expenses for the year ended May 31, 1897, were £302,160, of which £136,090 were for labor and £58,040 for new works. The dividend duty and royalty came to £22,905; £300,000 were paid in dividends; £12,312 were credited to the bullion reserve, and there remained a balance of £680,484. The first section of the new reduction works was started in September, 1896, the second in May 1897, the third and fourth were to be ready by December 31. The total capacity will be about 100,000 tons per annum. In the operations of the mine 151,061 tons of material were taken from the open cut, of which 81,682 tons were waste and 69,379 tons were payable ore. The underground workings produced 35,437 tons of oxidized ore and 15,260 tons of sulphide, the latter coming from the part of the mine below the 315-ft. level. The total quantity of ore crushed was 105,244 tons, yielding 159,817 oz. The oxidized ore, of which 74,158 tons were crushed, averaged 21.3 dwt. per ton. The mundic (16,124 tons) averaged 4 oz. 10 dwt. 10 gr. gold per ton. The low-grade oxidized ore (14,628 tons) averaged 8 dwt. 11 gr. The average for the entire product was 1 oz. 10 dwt. 5 gr. gold per ton. The weights in these returns are those of the calcined ore delivered by the furnaces to the chlorination vat. The total tonnage of raw ore treated was 110,462. In calcining this ore the consumption of wood was 28,116 tons. The chlorination works used 515 tons of pyrolusite, 450 tons of salt, and 1,727 tons of sulphuric acid. The quantities mentioned in this report are presumably in English tons of 2,240 lb.

Mysore Gold Mining Co., India.—(Stamp-amalgamation mill; tailings treated by cyanide process.) In 1896 there were 64,297 tons of quartz stamped, yielding 1.45 oz. gold per ton, 50,525 tons of tailings amalgamated, yielding 0.25 oz. per ton, and 21,117 tons of tailings cyanided, yielding 0.14 oz. per ton; a total of 1.69 oz. per ton, or a gross yield of 108,781 oz. bullion. The cost of production reduced to the basis of the 64,297 tons worked was $11.61, divided as follows: Mining, $5.86; milling, $1.36; amalgamating tailings, $1.45; cyaniding tailings, $0.34; transportation, $0.31; miscellaneous, $0.30; London office, $0.42; royalty on gold, $1.57. The treatment of tailings by amalgamation cost $1.84 per ton, and the cost of the cyanide lixiviation was $1.05 per ton.

New Elkhorn Mining Co., Leadville, Colo., and Elkhorn, Mont.—(Pan-amalgamation mill.) The report for 1896 shows receipts from Leadville mines, £8,238; Montana mines, £82,330; interest, etc., £114—total, £90,742. The expenses were: Leadville mine, £11,214; Elkhorn mine, Mont., £59,168; London office, £3,709; taxes, etc., £578—total, £74,669. This left a balance of £16,073 profit. In the Elkhorn mine in Montana the work shows 99 ft. shaft sunk, 129 ft. winzes, 751 ft. drifts, 267 ft. crosscuts. The average cost per lineal foot was: Shaft, $26.11; winze, $7.99; drifts, $5.76; crosscuts, $7.32. The total rock raised was 13,830 tons, divided as follows: Dry ore, to mill, 11,513 tons; sold to smelters, 554 tons; second-class ore to dumps, 143 tons; surplus in stock, 166 tons; waste sorted out, 1,454 tons. The ore sold to smelters showed by assay 85.6 oz. gold, 90,787 oz. silver, and 149,367 lb. lead. The net value was $50,356, or $90.86 per ton. The mill statement shows 13,762 dry tons crushed and 13,718 tons amalgamated, the stamps working 315.38 days and the pans 357.63 days. The average saving was 92.3%. The average duty per stamp per day was 1.75 tons. The bullion product was 340 fine oz. gold and 486,721 fine oz. silver. The average price received for silver was 66.95c. per oz. This would give an average value per ton of ore crushed of $24.19. The cost per ton for mining was $12.39 and for milling $7.17, a total of $19.56, leaving a profit of $4.63 per ton.

North Boulder Gold Mining Co., Western Australia.—(Huntington mill amalgamation.) In 1896 there were 533 tons of ore crushed in a Huntington mill, yielding 2.25 oz. per ton, which was 78% of the assay value of the ore.

Nundydroog Gold Mining Co., Mysore, India.—(Stamp amalgamation; tailings treated by cyanide process.) This company's report covers operations for the year ending December 31, 1896. The total income was £168,167 from gold sold and £714 for interest, etc. The expenditures were £74,694, leaving a net profit of £94,187.

During the year 39,490 tons of ore were crushed and 7,990 tons of tailings treated. The production of gold was as follows: From mill, 43,299 oz.; from tailings, 1,626 oz.; total, 44,925 oz. This was equal to 39,594 fine oz. gold, or 1 oz. per ton crushed. The average return per ton was $20.72. The expenses were: Administration, $0.44; mine costs, $5.30; mill costs, $1.17; working tailings, $0.34; transportation, insurance and general expenses, $0.92; royalty to Mysore government, $0.21—total, $9.19. This left an average profit of $11.53 per ton worked.

Ontario Silver Mining Co., Park City, Utah.—(Pan-amalgamation mill.) There were 28,912 tons of ore mined in 1896; 30,270 tons milled and 532 tons sold to smelters. The ore milled averaged 39.28 oz. silver per ton, the tailings averaging 3.21%, and the salvage, 91.8%. The average crushing was 89.25 tons per day. The total production of silver was 1,191,673 oz.; of gold, 725 oz.; the total value being $776,854. The profit was $133,071. The silver cost 53.94c. per oz. Mining cost, $8.37 per ton; prospecting, $4.38; sundries, $1.16; hauling $0.44; milling, $6.16; bullion expense, $1—total, $21.50. The total production of the mine up to the end of 1896 was 538,283 tons of ore, yielding, $33,095,117. The total income was $30,988,511, and dividend payments, $13,445,000.

Ooregum Gold Mining Co.—(Stamp-amalgamation mill; tailings treated by cyanide process.) In 1896 there were 63,888 tons of ore milled, producing 55,162 oz. gold, and 59,461 tons of tailings treated, yielding 10,413 oz., a total of 65,575 oz., which realized, 246.645. The receipts were equivalent to $18.84 per ton, while expenses came to $8.56.

Portland Gold Mining Co., Cripple Creek, Colo.—(Ore sold in the general market.) The production in 1897 was 18,852 tons of ore, containing 58,735 oz. gold (3.12 oz. per ton) and 5,544 oz. silver (0.29 oz. per ton). The gross value of the ore was $1,177,643 ($62.47 per ton), and the cost of treatment (by smelting, chlorination, etc.) was $184,004 ($9.76 per ton). The total cost of mining was $513,335, or $27.23 per ton of ore.

Robinson Gold Mining Co., Witwatersrand.—The total receipts in 1896 were: From gold obtained, £778,082; rents, interest, etc., £6,117—total, £784,199. The expenses were: Mining, £110,748; milling, £32,788; maintenance, £4,387; salaries and general expenses, £20,045; mine development, £37,092; plant and buildings, $28.008; cyanide and chlorination works, £154,903—total, £387,970; leaving a profit of £396,229 for the year. From this is to be deducted £19,825 for depreciation and miscellaneous charges and £330,000 dividends paid, leaving a balance of £46,404. Adding a balance of £321,325 carried over from 1895, there was a surplus of £367,729 to current year; 177,500 tons of ore were milled. The tailings and concentrates saved were 99,905 tons, or 56.5% of the tonnage milled. From the tailings 73.8% of the assay value was saved, a rate nearly 10% higher than in 1895. The output is given as follows, the averages being reduced to United States currency:

	Total.	Per Ton.	
	Ounces.	Ounces.	Value.
Gold from mill	129,627	0.73	$12.77
Gold from concentrates	10,655	0.06	1.19
Gold from tailings	30,986	0.17	2.80
Totals	171,268	0.96	$16.76
Totals, fine gold	144,721	0.81	16.76

The concentrates are treated by chlorination and the tailings by cyanide. The cost of treating the tailings was 71c. per ton. The working expenses on the basis of the total tons milled have been for two years, per ton:

	1895.	1896.		1895.	1896.
Mining and mine maintenance	$3.05	$2.99	Cyanide expenses	$0.86	$0.40
Milling and mill maintenance	0.92	0.89	Mine development	1.37	1.00
General maintenance	0.09	0.12	Plant and buildings	0.15	0.76
General charges	0.52	0.54	Totals	$6.46	$6.70

The net profit last year was therefore $10.06 per ton.

St. John del Rey Gold Mining Co., Brazil.—(Stamp-amalgamation.) In the year ended May 31, 1897, there were crushed 73,630 tons of ore, which yielded 0.57 oz. gold per ton. The profit in Brazil, after deducting gold charges and the expenses of the Rio agency, was £39,488.

San Rafael, Pachuca, Mexico.—(Patio process.) According to the report for the second half of 1896, the cost of production was $28.49 Mexican currency, for a weekly output of 233 metric tons of ore, assaying 0.966 kg., and 16 tons of ore assaying 6.106 kg.

Standard Consolidated Mining Co., Bodie, Cal.—(Stamp-amalgamation mill; tailings treated by cyanide process.) During the year ended February 1, 1897, 10,160 tons of ore were mined at a cost of $8.906 per ton, and 6,407 ft. of dead work were done at a cost of $4.015 per ft. Transportation of ore cost 16.1c. per ton. The mill crushed 10,833 tons, of which 10,160 was for the company and the remainder on toll, the average assay being $19.02 gold and $1.38 silver; tailings assayed $6.14 gold and $0.97 silver. The cost of milling was $3.124 per ton, and the average salvage, 65.1%. The total cost of mining, milling, ore transportation, and general expenses was $13,536. The principal mining supplies consumed were 25,075 lb. of powder, 156,050 ft. of fuse, 668 boxes of caps, and 15,880 lb. of candles. In the mill there were used 10,339 lb. of shoes, 7,221 lb. of dies, 600 lb. of bosses, 229 lb. of tappets, and 730 lb. of liners.

Victor Gold Mining Co., Cripple Creek, Colo.—(Ores sold in the general market.) The report for the six months ending June 30, 1897, showed net receipts from ore sales of $141,046, freight and treatment charges being deducted. The cost of production was $109,046, including improvements. In addition to this taxes amounted to $1,558. The production included 983 tons of ore sold to smelters, yielding $97.40 per ton, and 5.708 tons of ore sold to cyanide works, averaging $9.38 per ton.

GOLD MILLING IN GILPIN COUNTY, COLO., IN 1897.

BY A. L. COLLINS.

THE mills of Gilpin County had a very busy time during 1897, handling an average of about 550 tons daily, or three-quarters of their full capacity. This amount is a considerable increase on the record of 1896, and will probably be again largely exceeded in 1898, the number of small shipping mines being steadily on the increase.

The most important addition to the milling resources of the county was at Perigo, about five miles north of Black Hawk, where a 30-stamp mill was erected to treat 80 or 100 tons of ore daily from the Perigo group of mines. This ore is very heavy in sulphides, carrying over 25% of iron pyrites and yielding only a small portion of its gold to amalgamation. The mill was therefore designed more for concentration than amalgamation, with rapid drop, shallow issue and four percussion tables to each five stamps. It has ample bin capacity for storing ore, crushers and automatic feeders, Corliss engine, subsidiary engine for driving concentrators and dynamo, and many improvements in detail over the older plants in the county.

At Black Hawk, the old Bobtail mill was thoroughly overhauled and a new section of 25 stamps added, giving it now 75 slow-drop stamps in efficient condition. The Penn mill has been well equipped with bins and automatic feeders the ore being crushed at the mine about two miles away—an excellent system where the supply comes from one central point. This mill and the Iron City mill close by are built on what may be called the compromise principle, the stamps being designed to run at about 60 drops, as contrasted with the 30 to 40 drops of the typical Gilpin mill, and the 90 or more drops of the new mill at Perigo, so universal in other districts.

Opinions continue very divided in the county as to the relative efficiency of the slow-drop and quick-drop styles of mill, numerous tests being quoted in favor of each type, and new installations of each having been added during the year. While visitors from other districts, and inexperienced men generally, are unanimous in condemning the slow-drop mills, it is very notable that those best qualified to judge are most cautious in expressing an opinion; while many capable engineers coming from other parts of the world with strong prejudice against a practice so exceptional have been converted after studying the actual work of these slow-drop mills on the peculiar type of milling ore handled in this county. The truth seems to be that each type of mill has its sphere here. On what may be called the typical Gilpin ore, a decomposed granitic rock with 10 to 15% of mixed sulphides, mainly iron pyrites, zinc blende, chalcopyrite, and galena, yielding the larger part of its gold contents to very careful amalgamation, the slow-drop mill seems to beat all its rivals in net saving. There can be no doubt that it makes a far larger proportion of slimes when stamping through the same mesh screens, and saves fine gold better. But as the proportion of sulphides increases, and still more notably as the value of the concentrated sulphides after amalgamation increases, this very point begins to tell against it; until with some ores the quick drop stamps save actually more value per ton. To carry the illustration still further: there are yet other ores in the county very heavy in sulphides or refractory for amalgamation, on which ordinary coarse concentration without the use of quicksilver will beat either form of stamp mill; this being especially true with ores carrying much fahlerz, a very common mineral in parts of the county.

As to the cost of the rival styles of milling, there is not much to choose. For equal capacity, the slow-drop mill is considerably more costly to erect; and it costs in labor and power a trifle more to run. But it apparently has a longer life in proportion, and costs somewhat less in repairs per ton; the stoppages also being apparently fewer.

There can be no question, however, that each style of mill should be properly equipped with crushers and automatic feeders; not even the softest and most clayey ore can justify hand-breaking and feeding with labor at $3 per day. Only the original faulty planning of the mills has prevented the adoption of these improvements long ago; although at the custom mills the running of little batches of ore, often in separate 5 or 10-ton lots, adds to the difficulty by requiring so many bins and the separate treatment of so many streams of pulp. All the newer mills are now crushing and feeding the ore automatically, and it is reported that the two largest custom mills in Black Hawk are shortly to be converted to the same plan.

Improvements in the details of milling have been freely introduced in the last three or four years. Amalgam traps, formerly unknown, are in universal use, and steel wearing parts are freely employed wherever experience proves them economical. Many of the mills are now adopting a double set of bump tables of the well-known Gilpin County pattern, the first set made of amalgamated copper, the second of cast iron. The latter receive the waste from the upper set, after passing it over an inclined percussion screen to cut out the coarser sand, and when carefully run they save a considerable additional quantity of very finely divided sulphides. The upper set are periodically cleaned up with hot water and sand, and prove very efficient savers of floured and silvery amalgam.

Careful tests were made in 1897 with the Wilfley table and with various forms of canvas tables, as well as a number of patented novelties of less merit. The Wilfley table at the Bobtail mill proved inferior to the bump tables for this very finely crushed pulp, and the canvas tables tried at the Hidden Treasure mill on the mill waste were also an economical failure on account of the labor required and the very low grade and high silica contents of the product saved. This mill is now testing Frue vanners on the sized bump-table waste. The latest attempt to treat the waste from all the mills below Black Hawk is a canvas plant, over which only the finest float slime—practically dirty water—is run; the concentrates being periodically sluiced off and cleaned on a vanner. This would appear more promising than most previous attempts; and its commercial result will be watched with interest.

The retreatment of mill waste at Black Hawk is in truth a difficult problem. The escaping sulphides do not carry the whole of the values, and are themselves so low in grade as to be unsalable, unless the silica be kept low enough to give them notable flux value. The whole question of loss from the Black Hawk mills has been greatly exaggerated by casual visitors, and by operators whose real trouble is the poverty of their ore. The average waste escaping from the mills will not assay over $1 per ton in gold values, as compared with an original gold assay value of $6 or $7 per ton; and the loss in silver, though far greater in percentage, is still less commercially important. Considering the extremely difficult and complex character of the ore milled, this must be considered very good work, and it reflects great credit on the Gilpin County mill men, who have almost without exception earned their own experience and evolved their own practice.

CYANIDING TELLURIDE ORES.

BY PHILIP ARGALL.

THE somewhat sudden discovery and rapid development of the Cripple Creek district in Colorado soon resulted in a large output of tellurium gold ores of too low grade to stand the heavy transportation and smelting charges, which varied before the railways reached the camp from $15 to $18 per ton. Stamping and amalgamation having early proved a failure, the economic treatment of these somewhat peculiar ores presented a fruitful field of experimental research which for some time engaged the attention of many metallurgists, offering as it did an instructive and profitable field for the introduction of chemical methods of gold extraction.

After much experimenting with the well-known and tested processes during the summer and fall of 1893, I came to the conclusion that cyanide of potassium was the best all-round solvent for the gold in the Cripple Creek low-grade ores. Much remained to be done, however, in the way of perfecting the mechanical treatment of the ore in order to produce what we then thought necessary, namely, "a fairly even and granular material, as free as possible from dust when dry-crushing was practiced, and equally free from slime if crushed wet."

Early in 1894 I had the opportunity to put my ideas into practical and successful operation in a small cyanide mill which had shut down after an unsuccessful run, while during the summer I was engaged by local capitalists to report generally on the treatment of Cripple Creek ores in view of the contemplated erection of large works; and later in the same year was engaged to erect and manage the works which form the basis of this paper. Before describing the works, however, it may be in order to briefly glance at the ore it was erected to treat.

The ores of Cripple Creek, Colo., are altered andesite, granite or phonolite, containing thinly disseminated iron pyrites and tellurium minerals, mostly calaverite, associated with quartz and very often fluorite. At and near the surface the tellurium is oxidized, and the gold when visible exists as an ocher-color powder (mustard gold) or semi-coherent mass, very often retaining the form of the tellurium crystal from which it was liberated. The pyrite carries gold, but not to any great extent. Free gold also exists in the unaltered phonolite dikes, very often in paying quantities.

The thoroughly oxidized ores are quite amenable to cyanide, while the "blue" unoxidized ores require roasting before they will yield a satisfactory extraction, for the reason that the tellurium minerals, calaverite and sylvanite, are all but insoluble in 0.5% cyanide solutions, while by roasting the tellurium is oxidized and the gold set free in the metallic state, easily soluble in mill solutions.

The works of the Metallic Extraction Co. are situated at Cyanide, a station on the Florence & Cripple Creek Railway, about 35 miles from the Cripple Creek mines and two miles from Florence, the oil center of Colorado. In this part of the valley of the Arkansas coal and oil are cheap and abundant, labor plentiful, and indeed all the conditions incident to the building up of a large metallurgical enterprise are at hand.

The works are erected on a flat site, following out my often expressed opinion that a flat site is preferable to a slope or terrace, since on the former works can be laid out not only to the best advantage but also can be operated at less expense.

The ore reaching the works from the Cripple Creek mines is delivered by the railway company on a double-track trestle, this trestle at the sampling works being 20 ft. above the floor line of the works. There are two sampling works, each of a capacity of 200 tons per day. No. 1 consists of one No. 4 Gates crusher and two No. 1 Gates crushers with intermediate screens. The ore is here crushed to about 1 in. cube, elevated to a Vezin sampler, which cuts out 25% and diverts it to crushing rolls, which reduce the ore to about 4-mesh. It is then elevated and passed over another sampler, which cuts out 0.1 part of the 4-mesh sample or 2.5% of the original ore. This cut is sent to the fine-crushing rolls and worked down in the usual manner for the sample, which in the final pulp is reduced to pass a 120-mesh sieve. The sampling machine takes 44 cuts per minute from the stream of free falling ore, traveling horizontally through the entire stream for each cut. The main part of the ore is carried off by special conveyors and distributed automatically in the storage bins.

No. 2 sampling works consists of a 12×20 in. Monarch crusher and two 30×5 in. Blake Challenge crushers. The ore is shoveled from the railway cars into a chute leading to the Monarch, while all of it but 2.5%, cut out for the sample, is automatically conveyed to the storage bins in front of the fine-crushing mills. This ore is thus handled but once during the coarse crushing, sampling, and distribution in the storage bins. These bins have a capacity of 1,500 tons.

Ores are received in the sampling works from all parts of the Cripple Creek district, and are purchased outright from the mine owners on the basis of its assay value. Ores under 2 oz. are at present purchased at $19 per oz. for the gold, less $7 to $11 treatment charge, which treatment charge includes the freight from the mine to the works. For ores containing over 2 oz. $20 per oz. is at present paid for the gold, less $10 to $14 per ton freight and treatment charge.

The ore is brought from the storage bins into the fine-crushing mills by belt conveyors; here the first step is to drive off the moisture and raise the ore to such a temperature as will insure good screening. It is not alone sufficient to drive off the moisture, since it has been found that the hotter the ore the greater the capacity of the machines. There is, of course, a limit to heating the ore, depending largely on the elevators used; if these are of ordinary rubber belting the limit is soon reached; iron elevators, however, give ample margin.

The dryers used are of the tubular pattern. The No. 1 dryer consists of four steel tubes nested together inside two track-bands and connected at the feed and discharge ends by two hoods. The tubes are lined with fireclay tile and revolve as one cylinder. It will be noticed that the ore is divided into four thin streams and brought into intimate contact with the heated air and gases passing through the 18-in. tubes of the dryer. The motion of the ore advancing in these small tubes is very gentle and regular, and consequently produces but little dust. An improvement in the single cylinder dryer consisted in dividing it into quadrants by plates placed at right angles extending longitudinally through the cylinder. This improvement increased the drying efficiency of the cylinder at the expense of a higher dust loss and greater wear and tear, as the ore is alternately sliding along the plates from the center to the periphery and back to the center again during a revolution of the cylinder. By using four or more small tile-lined cylinders instead of one large cylinder divided into quadrants I succeeded in again increasing the efficiency and reducing the dust loss and wear at the same time. It will be noticed that this tubular dryer is always in balance, the ore in an ascending tube being balanced by that in a descending one, or very nearly so. The capacity of No. 1 dryer is 80 to 100 tons per day. Plate No. 1 shows our No. 2 dryer while in process of erection. Its capacity is 180 to 200 tons per day.

The ore, deprived of its moisture and heated to about 300° F., is taken up by steel bucket elevators and delivered to the coarse screens, the oversize returning to a set of 36-in. crushing rolls, by which it is reduced to about 8-mesh, while the ore passing the mesh of the coarse screens is delivered to the next finer screen. The crushed ore is again elevated, screened, and the oversize conducted to a set

ARGALL ROASTING FURNACE, CYANIDE, COLO.

GENERAL VIEW, METALLIC EXTRACTION WORKS, CYANIDE, COLO.

ARGALL DRYING FURNACE, CYANIDE, COLO.

of 15×26 in. crushing rolls, which reduces it to about 15-mesh; and the screened oversize from this roll is divided between two finishing rolls of the same size and construction. The fine ore is taken out after each passage of the material through the rolls, and indeed any pulp of the desired mesh existing in the uncrushed ore is screened out directly without passing through the crushing rolls. We govern the peripheral speed of our rolls according to the size of the material they receive, as follows: Rolls receiving up to 1.25 in. cube, 350 to 400 ft. per minute; rolls receiving up to 0.25 in. cube, 550 to 600 ft. per minute; rolls receiving up to 14-mesh, 700 to 750 ft. per minute.

Finishing rolls receiving material from 15 to 20-mesh for reduction to say 40-mesh can be driven at speed of 1,000 ft. and over; indeed the speed limit will under these conditions be found in the journals and not in the size of the ore particles. I am not, however, an advocate of speeds much higher than 1,000 ft. per minute. Fine crushing rolls should be supplied with a regular and heavy feed, so that the ore can be, to a large extent, crushed upon itself. In this way the maximum crushing capacity can be attained while the efficiency of the rolls is not reduced by slight inequalities or irregular wear of the shells.

For fine crushing, massive and well-built rolls are a prime requisite. The journals should be outside of the dust-proof housings, well protected against dust and grit and amply provided for thorough lubrication. For 26×15 in. rolls the shafts should be not less than 7 in. diameter in the journals, and the boxes should be of the ball and socket variety, the whole figured for a steady working-spring pressure of 15 tons on each side, or pair of journals, and capable of standing up under double this pressure for intervals.

The Metallic Extraction Co. has three fine-crushing mills. Mill No. 1 has one 27-in. and three 26-in. crushing rolls, with a capacity of 100 tons per day to 40-mesh; Mill No. 2 has one 36-in. and three 26×15 in. rolls; its capacity is 170 tons per day to 30-mesh. Mill No. 3 is similarly equipped, but embodying experience gathered from the former work has a capacity of 200 tons per day to 30-mesh. The tonnage, however, gives but a poor idea of the mass of stuff ground up in one of these mills during each 24 hours. The ore averages in bulk as it reaches the works in railway cars 25 cu. ft. per ton; when reduced to 30-mesh it averages 23 cu. ft. to the ton, consequently a mill crushing 200 tons per day of this very light material has to dispose of no less than 5,000 cu. ft. of ore every 24 hours. Mill No. 1 has so far been used exclusively for crushing oxidized ores, which are sent directly from the mill to the leaching tanks. The supply of this class of ore is now very small and uncertain, so much so that with the completion of our new roasting furnaces we propose to roast all ores coming to the works. Mills No. 2 and 3 are under the same roof, and as the process is entirely automatic three men on a shift run both mills. These mills are situated adjoining the roasters and treat exclusively ores that are subsequently roasted. Between the mills and the roasters storage bins are provided for 800 tons of crushed ore.

The first roaster put in was a straight-line mechanical furnace. Afterward six tubular roasters were added, bringing up the roasting capacity to 400 tons per day. The sulphur in Cripple Creek ores now averages about 2%, and we procure satisfactory extractions by roasting down to 0.1% sulphur. It requires, however, a very high terminal heat to break up the sulphates. This, in cyanide treatment, is the crucial point, and we find the rotary tubular furnaces give the desired roast with scarcely a trace of sulphate left in the product. The temperature, however, necessary to obtain these results comes very near the sintering point of the ores, and owing to the small diameter of the tubes the heat from the fire-box is so concentrated in the hood at the discharge end of these furnaces that there is no difficulty in sintering the ore if necessary; our aim is to bring the heat close to the sintering point.

The tubular roasting furnaces are of the same general design as the dryers; they are, however, built much stronger. The discharge is also different. In the standard roaster the tubes are 29 ft. long by 25 in. diameter inside the lining. They make one revolution in 4.8 minutes and average 48 tons per day from 2% to 0.1% sulphur. The roasted ore is discharged continuously through a series of openings in the periphery of the hood (Plate II). All these except the two over the ore-hopper at any one time are covered with a band of iron which prevents the exit of flame around the top of the furnace. The fire-box is built of steel plate and mounted on wheels. The furnace is driven with friction wheels at each track band, operated through a differential drive which insures an absolutely even motion. These furnaces are patented in the United States and abroad.

The roasted ore is discharged into conveyors traveling over water-cooled surfaces, so that by the time it reaches the leaching-room the ore is ready to be charged into the tanks. This system of automatic cooling has been in use since September, 1896, and has given perfect satisfaction up to its full capacity.

Much has been written concerning the loss of gold in roasting telluride ores. Our experience in the treatment of nearly 100,000 tons of these ores shows but little loss of precious metals. The conditions incident to the successful roasting of tellurides are, a very gentle and slow application of heat, such as can be attained in a furnace fired at one end, or better still in a tubular furnace. In the tubular roasters used in these works we find the best results from a three hours' exposure of the ore in the furnaces; during the first two hours the ore is gradually advanced to a dull red heat and for the last hour it is subjected to a good roasting heat, terminating at a bright red, close to the sintering point.

The tanks in use at the Metallic Extraction Co.'s works are built of steel; the last added are 50 ft. in diameter and hold 450 to 500 tons. The charge, when extraction is completed, is sluiced out through bottom discharge valves and pumped to the dump by centrifugal pumps. The filters used are cane matting supported on a wooden framework and covered with 10-oz. duck. The solution passing these filters is perfectly clear, provided the ore is properly roasted. With badly roasted Cripple Creek ore, sulphates of magnesia and alumina prove very troublesome, inasmuch as the hydrates precipitate on exposure of the solution to the air, and also in mixing with solutions flowing from other and more alkaline charges, coating the zinc with a gelatinous film which effectually prevents the precipitation of the gold.

Zinc in the form of shavings, and also zinc dust, is used to precipitate the gold; the latter we believe preferable when adapted as a continuous process, more especially as the action is quicker and less zinc is required per ounce of bullion precipitated.

The method of precipitation by means of zinc has been very often criticized, but nevertheless it has stood the test of time, and for solutions running from 0.05% of cyanide upward, and low in gold, it is likely to continue for a considerable time to come the best precipitant of gold from cyanide solutions, particularly when used in the form of dust. I do not wish to be understood as stating that solutions below 0.05% in free cyanide and low in gold cannot be economically treated by the zinc method. I do say, however, they become more troublesome, require much longer contact with the zinc and greater care to obtain uniform results; therefore to this strength at least electrical methods have a fair field; for solutions carrying over 0.1% cyanide I cannot see the slightest chance for electrical precipitation to compete with zinc as we use it here.

The presence of zinc is claimed by some to be very detrimental to the solvent power of cyanide solutions. This is not quite correct, since zinc does not accumulate to any great extent in the solutions. The highest I have ever found is 0.55% in our strong solution, while the average for over two years is but 0.312%. To determine what effect mill solutions had as compared with pure solution, I caused 42 tests to be made with various ores received at these works, 21 with ordinary mill solution containing zinc and 21 with pure solution of potassic cyanide. Taking the extraction given by the pure solution as 100%, I found mill solutions give on blue ore (raw) 96.6%, oxidized (raw) 100%, and roasted ore 95.1%. The consumption of cyanide, however, was 25% less in the mill solutions than in the pure solution. To fully test this point I had 36 further tests made on three different classes of ore under precisely similar conditions, 18 with mill solutions, and 18 with pure solutions. Here again the zinky mill solutions showed 28% less cyanide consumption than the pure solutions. The solutions were titrated with silver nitrate, making the usual precautions in the case of the mill solutions. I do not claim scientific accuracy in determining the free cyanide in the mill solutions in the presence of zinc, but I believe the tests are fairly accurate. It has often been noticed that the laboratory tests on ores almost invariably give a higher cyanide consumption than is found to occur in the actual treatment. The cause of this discrepancy is, I think, clearly shown by the foregoing experiments, since realizing this fact we make all our laboratory tests with mill solutions, which check up very closely with the mill work, both as to time of treatment for a given ore, and also the consumption of cyanide.

Four years ago I was led to the conclusion that the zinc was chiefly precipitated in the charges of fresh ore in the lixivation tanks.* Since then I have pröved the correctness of this view, and it would appear from the foregoing tests that at least part of the cyanide combined with the zinc is available for dissolving gold, probably after the reaction has taken place which results in throwing down the zinc and regenerating potassic cyanide. This interesting study I hope to resume shortly.

My present views are (1) that mill solutions will give equally as good extraction as pure solutions, but they require longer contact with the ore, say 10% longer; (2) mill solutions will give the same extraction as pure solutions, with about 25% less consumption of cyanide; (3) the lower consumption is probably in part due to the mixed cyanides in mill solutions being less sensitive to cyanicides and

---

* *Engineering Magazine*, September, 1894, p. 814.

partly to the potassium, sodium or other cyanides regenerated after the zinc is precipitated in the ore.

I have at various times attempted to determine the reactions that occur in the zinc precipitation boxes, more particularly to determine the conditions incident to good precipitation of the gold. The results of my investigation have, however varied so widely with minute changes in the composition of the solution that I could not obtain concordant results in all particulars, though I have secured much interesting information that serves a useful purpose in our work.

Diagrams Nos. 1 and 2 are plotted from determinations made during six continuous days. The zinc boxes were here filled with shavings pressed down to the density we find best for the purpose. Accurate determination showed that the zinc occupied but 3% of the space, leaving 97% space available for the passage of the solution. The zinc boxes are 4 ft. wide, the solution flowed alternately downward through the zinc shavings in one compartment and upward in the next, overflowing into the third compartment and so on; at the point of overflow from each double compartment a continuous sample was drawn off through a glass tube, the position of which was changed from time to time so as to take part of the stream across its full width.

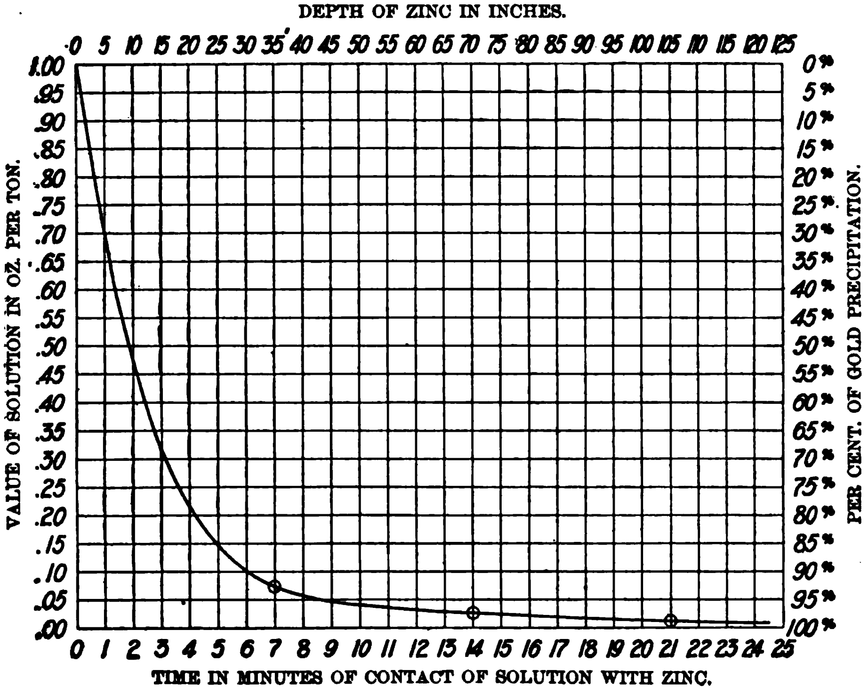

DIAGRAM No. 1.

Continuous samples were so drawn from each compartment and the determination made every 12 hours. These results were averaged and plotted. Diagram

No. 1 shows the gold precipitation as deduced from these experiments, the depth of zinc in inches through which the solution passed, and the percentage of gold precipitated at each point. It may be taken as normal precipitation with solutions in good working condition. Diagram No. 2 shows the average zinc, cyanide, lime, and alkalinity curves for the same solution and during the same period of time.

It will be noticed from Diagram No. 2 that the lime is partially precipitated or filtered out in passing through the boxes. In this case it enters the box at 0.156% and leaves it at 0.15%, the precipitation being quite regular, in fact almost a straight line on the diagram. We use lime as a neutralizer, which to a slight extent passes into solution. The highest I have found it is 0.19%, while the average percentage held in solution is but 0.12%.

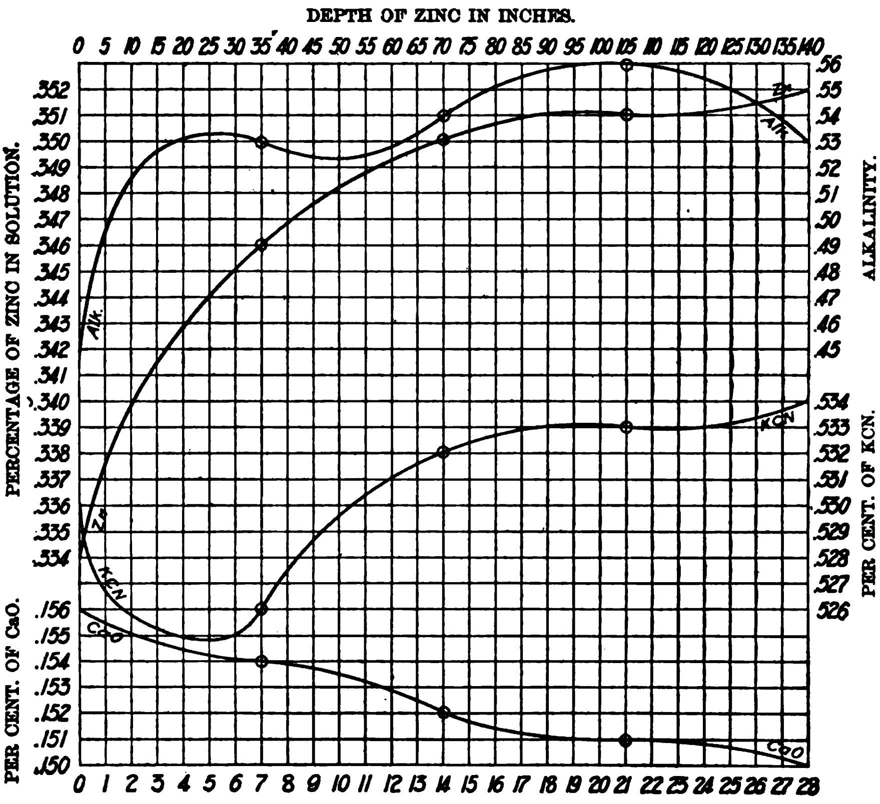

DIAGRAM No. 2.

Cyanide Curve: The cyanide enters at 0.53% and immediately falls to 0.526%, then rises steadily to 0.534%. It is not at all unusual to find the free cyanide higher in the solution leaving the boxes than on entering; still it is not the rule. Our experience with solutions of this strength is that there is no appreciable loss of cyanide in passing through the boxes. Sometimes the issuing solutions are higher, sometimes lower, while the average shows about the same strength of cyanide in the solutions issuing from the boxes as contained in the solutions entering them.

Zinc Curve: The zinc carried in the solution entering the boxes is 0.334%. The curve rises rapidly until 97% of the gold is precipitated and then flattens. Tabulating the results we have the following: After the solution has filtered through 35 in. of zinc, 0.012% Zn is dissolved and 92.4% of the gold is precipitated; after 70 in. of zinc, 0.004% Zn is dissolved and 4.7% of the gold is precipitated; after 105 in. of zinc, 0.001% Zn is dissolved and 1.83% of the gold is precipitated; after 125 in. of zinc, 0.001% Zn is dissolved and 0.17% of the gold is precipitated. The total, 0.018% of Zn, equals 0.36 lb. of zinc, while 99.10% of the gold is precipitated, or 0.364 lb. adv. of zinc per ounce of gold precipitated, or 5.31 troy oz. of zinc used to precipitate 1 oz. of gold and 0.1 oz. of silver.

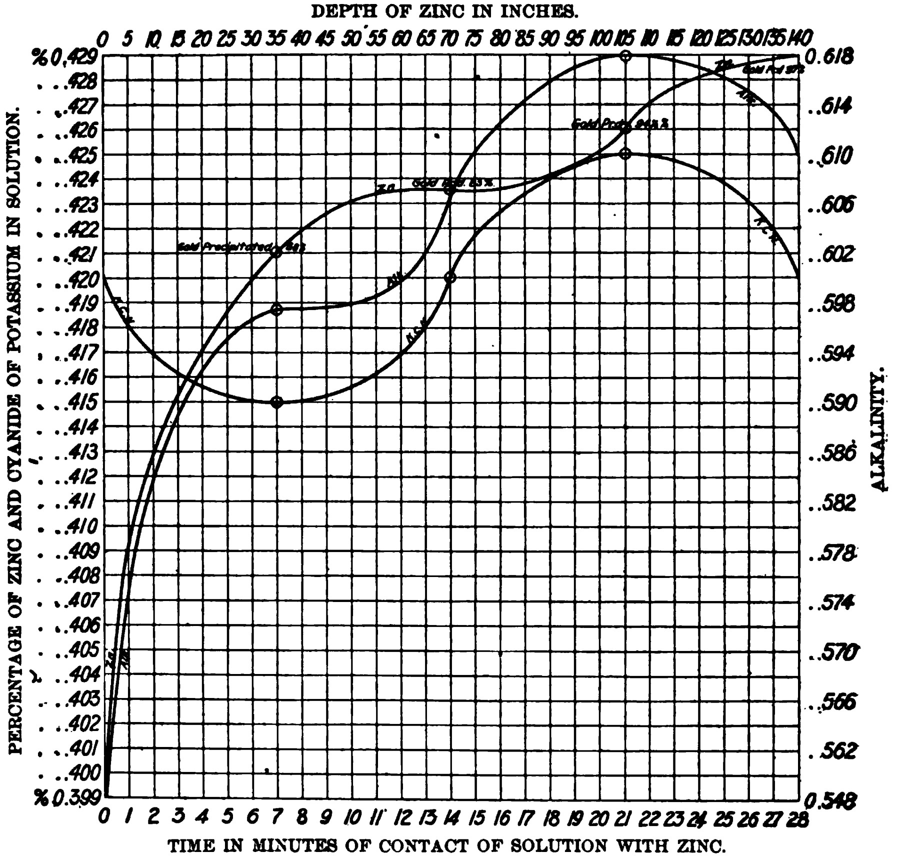

DIAGRAM NO. 3.

Alkalinity Curve: We invariably find an increase of alkalinity in cyanide solutions while passing through the boxes. (The alkalinity is reported in terms of sodium hydrate, using phenolpthalein as indicator.) The alkalinity rises rapidly with the precipitation of the gold and falls again toward the end of the box, usually leaving it at about the strength it entered, or very little in excess. The following partial analyses of these solutions were made at the end of the experiments, excepting KCN, which was determined separately each day:

	No. 1.	No. 2.	No. 3.	No. 4.	No. 5.
	Per Cent.	Per Cent.	Per Cent.	Per Cent.	Per Cent.
KCN	0.5300	0.5260	0.5320	0.5330	0.5340
HCN	0.0269	0.0269	0.0290	0.0332	0.0373
KCNS	0.0388	0.0389	0.0389	0.0388	0.0386
$K_4Fe(CN)_6$	0.0580	0.0690	0.0810	0.0840	0.0880
CaO	0.1560	0.1540	0.1520	0.1510	0.1500
Zn	0.3340	0.3460	0.3500	0.3510	0.3520

No ferricyanide or alkaline sulphides were present. No. 1 is the average solution entering; No. 2 the solution after filtering through 35 in. of zinc; No. 3 the solution after filtering through 70 in. of zinc; No. 4 the solution after filtering through 105 in. of zinc; No. 5 the solution after filtering through 140 in. of zinc. This particular solution had been in use on telluride ores for two and one-half years. It was of course kept up to the proper volume and strength, but no solution had been wasted from the mill. During this period 127,327 oz. of fine bullion had been dissolved by the solution and precipitated from it by means of zinc.

Diagram No. 3 shows that a strongly alkaline liquor, while causing a rapid solution of the zinc, does not precipitate the gold in proportion. This diagram is from 24 hours' run of a strongly alkaline solution. The zinc in solution entering the box was 0.399%. After the solution had passed through 35 in. of zinc, 0.022% of Zn is dissolved and 68% of the gold is precipitated; after 70 in. of zinc, 0.003% of Zn is dissolved and 15% of the gold is precipitated; after 105 in. of zinc, 0.002% of Zn is dissolved and 11.5% of the gold is precipitated; after 140 in. of zinc, 0.003% of Zn is dissolved and 2.5% of the gold is precipitated, making a total of 0.030%, or 0.60 lb. of the zinc dissolved, and 97% of the gold precipitated.

Cyanide Curve: The entering solution carries 0.42% KCN, falls in seven minutes to 0.415%, rises in the next seven minutes to the entering strength 0.42%, continues rising to 0.425%, and falls in the last seven minutes to 0.42%, the strength at which it entered.

Alkalinity: The solution enters at 0.548%, immediately rises to 0.597%, continues rising until it reaches 0.618%, and then falls to 0.61%.

Diagram No. 4 gives some horrible examples of precipitation, or rather lack of it, but nevertheless it is instructive. These solutions had percolated through acid ores and were too low in alkalinity. The addition of caustic soda to the solution immediately set matters right. Cyanide of potassium would have accomplished the same result, but in these solutions caustic soda was preferable.

The solution No. 1 contained 0.132% zinc on entering. After passing through 24 in. of zinc, 0.005% of Zn was dissolved and 42% of gold was precipitated; after

48 in. of zinc, 0.004% of Zn was dissolved and 10% of the gold was precipitated; after 72 in. of zinc, no Zn was dissolved and no gold was precipitated; after 96 in. of zinc, no Zn was dissolved and no gold was precipitated; a total of 0.009%, or 0.18 lb. of zinc dissolved and 52% of gold precipitated.

In No. 2 the entering solution contained 0.143% Zn. After passing through 24 in. of zinc, 0.002% of Zn was dissolved and 33% of the gold was precipitated; after 48 in. of zinc, 0.005% of Zn was dissolved and 8% of the gold was precipitated; after 72 in. of zinc, 0.008% of Zn was dissolved and 11% of the gold was precipitated; after 96 in. of zinc, 0.004% of Zn was dissolved and 3% of the gold was precipitated; a total of 0.019%, or 0.38 lb. zinc dissolved and 55% of gold precipitated. Here the volume of solution passing was too great or the precipitation box too short, which amounts to the same thing. Anyhow the precipitation continues fairly regular, and given longer contact with the zinc would probably have been satisfactory. These particular solutions averaged about 0.25 oz. of gold per ton as they entered the boxes.

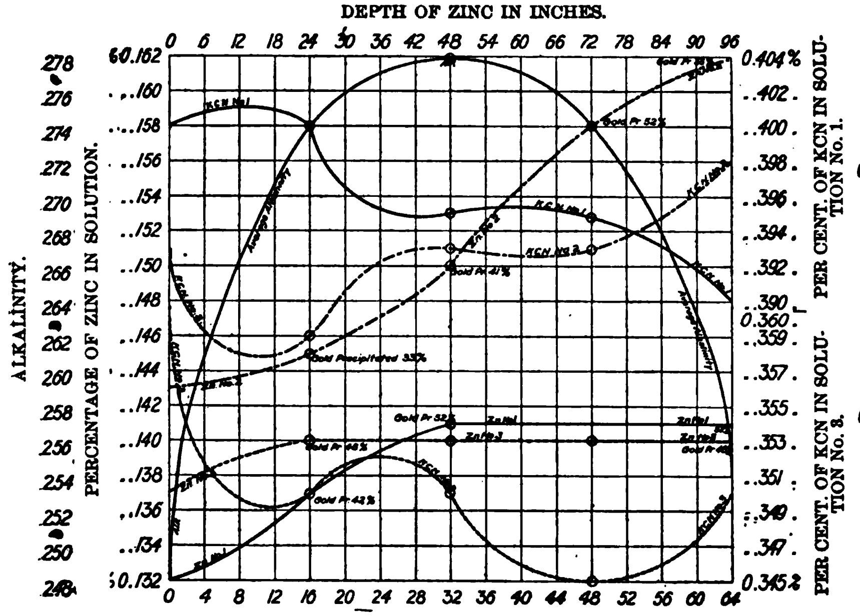

DIAGRAM NO. 4.

In No. 3 the entering solution contained 0.137% Zn, which after passing through 24 in. zinc showed 0.003% of zinc dissolved and 48% of the gold precipitated; but after passing through 48, 72, and 96 in. of zinc no zinc was dissolved nor gold precipitated, the total of the experiment remaining 0.003% or 0.06 lb. zinc dissolved and 48% of the gold precipitated. The gold on entering was 0.23 oz.; on leaving boxes, 0.12; alkalinity on entering 254, middle 294, end 274.

Our general practice shows a consumption of 0.92 lb. of zinc for each ounce of fine bullion produced. Of this amount not more than 40% is dissolved, the remaining 60% being removed from the boxes with the precipitate at each weekly clean up, and owing to its fine state of division and richness in gold we find it preferable to destroy the zinc and recover the gold.

With normal solutions carrying about 1 oz. of gold per ton in a 0.5% cyanide solution, not more than 0.33 lb. of zinc is dissolved for each ounce precipitated. This distinction between the zinc dissolved and the total zinc used in precipitation should be carefully noted; all the figures of critics that I have seen are apparently based on all the zinc being dissolved. Solutions rich in gold precipitate far more readily than weaker ones, other things being equal. When the solutions pass 1.5 oz. per ton the gold on the shavings assumes a yellow color, and passing 2 oz. and upward is usually golden yellow in the first compartment, shading off in the following compartments to the usual black-colored deposit that collects on the zinc in ordinary precipitation from poor solutions.

The precipitation of the precious metals by means of zinc is very often supposed to be a weak point in cyaniding, many failures of the process being attributed solely to this cause. I would not call it a weak point, but on the contrary a very strong one, requiring, it is true, careful attention, proper manipulation, and solutions in good working condition; given these, it is the cheapest and best method of gold precipitation known.

The essential conditions for good precipitation are: First, clear solutions; second, moderately alkaline solutions containing free cyanide of potassium; third, boxes properly prepared with the zinc.

As regards the first requirement, dirty or slimy solutions coat the zinc and impair precipitation. This sometimes happens with solutions apparently clear, but which on careful examination are found to contain matter in suspension; it is therefore good practice to have large settling tanks to receive the solutions draining off from the leaching tanks, these settlers answering two purposes, namely, to settle out suspended matter and to equalize the flow through the precipitation boxes, which latter is also an important feature.

As a second condition precedent to good precipitation, we must have a moderately alkaline solution, otherwise the zinc is but little acted on and soon becomes passive, while on the other hand a strongly alkaline solution is, as we have already seen, detrimental in other ways; again, free cyanide is an essential condition for good precipitation, though in moderately alkaline solution, fairly free from metallic salts, a very small amount of cyanide will suffice, provided long contact is given between the solution and the zinc. It goes without saying that the solutions must be kept free from the accumulation of metallic salts, a matter often attained by the judicious use of lime.

Third, when the zinc shavings are used they should be cut in as fine threads or filaments as possible, having, however, sufficient substance to hold together and not break in handling. These shavings should be pressed down evenly in the boxes and with some little force. When properly packed the shavings will occupy but 3% of the space, leaving 97% interstitial space for passage of solution. The boxes are preferably prepared every 12 hours, all the zinc in the first three compartments being stirred up to detach adhering precipitate and foreign matter and then filled with zinc pressed down as above described; finally, the zinc-boxes should be completely cleaned up every week to keep them at their best, for it must be remembered these boxes are huge filters, each one in the Metallic Extraction Works passing 1,000 tons of solution per week, and if this solution deposits but 2 oz. per ton (almost an infinitesimal amount) we have about 2 oz. foreign matter to each ounce of gold precipitated; very often there is fully that amount of lime extracted from the solutions in passing through the boxes, while manganese and various other substances are also deposited; hence the importance of freeing the zinc from such deposits, as pointed out above. Continuous samples of the solutions entering and leaving the boxes should be taken and assayed every 12 hours, though to the experienced eye the evolution of hydrogen from the solution passing through the boxes clearly indicates the condition of the precipitation; the assays, however, give the accurate check on the work.

Perhaps in no part of the process is there wider differences in practice than there is in refining the precipitates. The method we have worked up, and have had in use for about two years, is as follows: The precipitate is placed in cast-iron pans, which are subjected to a dull red heat in a muffle furnace. When this roast is complete the precipitate is treated with hydrochloric acid in pans having mechanical agitators. The residue is then washed, air-dried on the filters, fluxed, and replaced in the roasting pans for thorough drying, and is afterward smelted. The bullion runs 950 to 980 fine, and is quite homogeneous and is easily sampled; in fact, the mint returns check very closely our sampling and assaying.

The cyanide process when first introduced in Colorado was advertised as simplicity itself. I quote from an advertisement:

"The process consists of pulverizing the ores to a fineness of about 50-mesh and then subjecting the same to a very dilute solution of cyanide. A few tubs, especially constructed according to our diagrams for triturating, settling, and filtering, is all that is required extra in connection with any kind of pulverizing stamps or rolls."

The process is even now usually looked upon as a cheap and crude method of gold extraction, particularly applicable to tailings and low grade-ores. Some stock writers even go so far as to tell one in advance the extraction that can be made by cyanide (which is never above 80%, if my memory serves me), and this quite irrespective of the value of the ore, or conditions in which the gold exists; hence they argue in a circle and show that low grade ore can only be worked at a profit. In the works of the Metallic Extraction Co. I have applied cyanide to the treatment of fairly rich ores, and more particularly to roasted ores on an extremely large scale, and in the latter at least I believe we have led the way and established the process as second to no other wet method of gold extraction.

.GOLD MINING IN SOUTH AFRICA.

BY EDWARD D. CHESTER.

THE discovery of the Witwatersrand gold fields was brought about in a rather peculiar manner. In 1884 Messrs. Struben Bros. discovered a lead about a mile and a half north of the present Main Reef series, which was composed of fine particles of quartz resembling very fine sandstone, intercalated with a seam of minute particles of gold. It had a sandwich appearance and was rather flexible.

This lead was situated in a deposit of fine grit similar to millstone grit; but it did not extend far in depth, nor had it sufficient length to make it payable. A 10-stamp battery was erected by the persons mentioned, but after several tons had been crushed the prospect was abandoned.

It was during these operations that a Dutch farmer, named Geldenhuis, was riding about his farm one day when his pony stumbled over a bowlder; and as the animal was supposed to be sure-footed, he dismounted to have a look at the rock which had nearly been the means of bringing him down. He broke a portion off, took it to the farmhouse, crushed it in the manner he had seen the Strubens do, and washed it off in a saucer; he got a very bright prospect of gold. He took this to Pretoria, and told some of his friends what he had discovered, and where, but he met with derision. However, he was shrewd enough to secure his mynpacht and some claims, and started to work with some of his fellow Dutchmen with pestles and mortars and a tub to wash off in. The discovery was rich enough to enable them to make £5 or £6 per week. It ultimately turned out that he had discovered the South Reef.

During this time miles of ground could have been procured at £10 per claim, a claim being 150 ft. on the strike and 400 ft. on the dip. Owing to Geldenhuis' discovery, attention was attracted to the spot, and Colonel Ferreira went out with a prospecting party and located the rich ground that is now famous as the Ferreira mine. This was in 1885, and personally I passed within 20 miles of the present gold fields at the time; and a man who was with me in the coach did his utmost to persuade me to go over and see the prospects, informing me that there was a stretch of country between 30 and 40 miles long which would give an ounce to the ton. The story seemed to me so ridiculous that I did not accept his offer although he was quite willing to drive me to the ground and back for nothing. I was, however, on my way to America to purchase machinery for some of the companies I was connected with in the De Kaap district, and did not think it advisable to waste a week, which I should have had to do in order to verify his statement. The man's words turned out later to be true, and at the present time there is practically 30 miles of reef under work.

Formation.—The geological formation of the Witwatersrand gold-fields in which the auriferous material is contained is a sandstone similar to the Old Red Sandstone, but probably belonging to a different age. These sandstone beds are interlaminated with deposits of conglomerate, which has the appearance of almond-rock, the almonds being represented by white or blue pebbles, and the toffee portion by iron pyrites; on this account it was christened "Banket," the Dutch word for almond-rock. To realize the evenness of these deposits, one cannot do better than picture a coal-seam. It is most extraordinary that the foot and hanging wall are perfectly smooth, a distinct line existing between the formation of sandstone and the coarse pebbles; and there is no sign of any imbedding of the pebbles in the sandstone formation, although in places on the footwall there is a quartzose and talcose schist, and also a micaceous schist that might be classed as slate. It is quite evident that the sandstone must have become perfectly hard before the pebbles were deposited on it; and seeing that the overlying rock is also similar, one can only imagine that the conglomerate must have become compact and hard prior to the deposit of another bed of sandstone.

The number of these conglomerate beds is legion; but there are only three that are payable at present, viz., the Main Reef, with leader lying to the north; the Middle Reef, which is only payable in a few sections, and the South Reef, which lies south of the Main Reef at distances varying from 70 to 1,200 ft.

It is difficult to imagine how this formation has originated; the whole of the district at present worked is intersected and in many places interlaminated with diorite, and it is my opinion that this diorite has been the source of the gold. The diorite dikes run in all sorts of fashions, vertical as well as horizontal, and have in many places run over the surface of the formation so completely as to absolutely smother up the outcrop. Prior to this sandstone formation becoming intersected with diorite coming up from below, there is not the least doubt that the beds were tilted by an upheaval of granite which came in on the north, and has probably been the means of forming the cup-shaped outcrop, as will be seen by reference to any map of the gold fields, and giving the dip to the formation.

It was not till 1887 that any extensive crushing took place; and it was nearly two years before people began to appreciate the value of deep-level claims. To understand the term "deep-level," it is necessary to explain that in the South African Republic a claim can only be worked within its lines, either on the strike or on the dip, and the reef cannot be followed down as is done in America.

At the outcrop of the Main Reef series the dip was about 70° from the horizontal; and most parties owning outcrop claims considered that they had sufficient ground for years to come without troubling about the ground below them. Boring operations carried on by the Chester Diamond-drilling Co. and others soon proved that this dip did not continue, but that at 600 to 700 ft. it flattened out to 30°. Owing to my connection with this work I have been in a favorable position to study the dip of these deposits.

It is certain that from the outcrop down to 3,000 ft. the dip averages about 30°; but beyond that point nobody can say. The difficulty of coming to a conclusion, although so many bore-holes have been put down, is on account of the tremendous amount of faulting that has taken place vertically and horizontally, and parties interested in deep-level ground are too apt to jump at the conclusion that from one end of the Rand to the other the dip will flatten considerably, simply because in one or two spots the reef has been met with at a less depth than was anticipated.

In putting down the Bezuidenville hole the headgear was 64 ft. high and allowed of 40 ft. of rods being pulled at one time. The hole was bored to a depth of 3,500 ft. in eight months, the actual time of boring being seven months. This, I believe, is the fastest boring that has ever been done in the world.

An interesting incident occurred when the rods were down 1,900 ft. They parted at 400 ft., leaving 1,500 ft. in the hole. Endeavors were made to tap into the rod, but without success. It was then suggested that a tool should be made to go down inside the rod and tap into the next coupling, and this was successfully accomplished.

Method of Working.—Most of the outcrop mines are worked by means of inclined shafts; and headgears, similar to what is shown in Fig. 1, are in general use. It will be noticed that the self-dumping skip is used, and that separate bins are made to collect the "deads," the ore that passes through the grizzlys, and the ore to be crushed. This sketch does not show a crusher at work, and if same were placed in such a headgear, it would be necessary for the latter to be slightly higher.

The skips hold about three tons of ore, and two are in operation, one being up while the other is down, the shaft being fitted with a double-track. The skips are worked with a double-drum, geared hoist, operated by clutches—with brakes on the disk as well as post-brakes on the drums. Of course, in a deep-level mine where the reef is first cut at a considerable depth, such a gear would not be suitable; but in these cases, owing to the reef flattening so considerably, the main hauling-gear only goes down to the intersection, where the reef is cut and bins placed, and the remainder of the distance is worked with an air or electric hoist; or, as in many cases, by having an extra sheave on the headgear and operating from the main hoisting-engine. It has been found a great advantage on these fields (as in other countries) to do all the crushing in the headgear, doing away with a good deal of heavy framing in the mill.

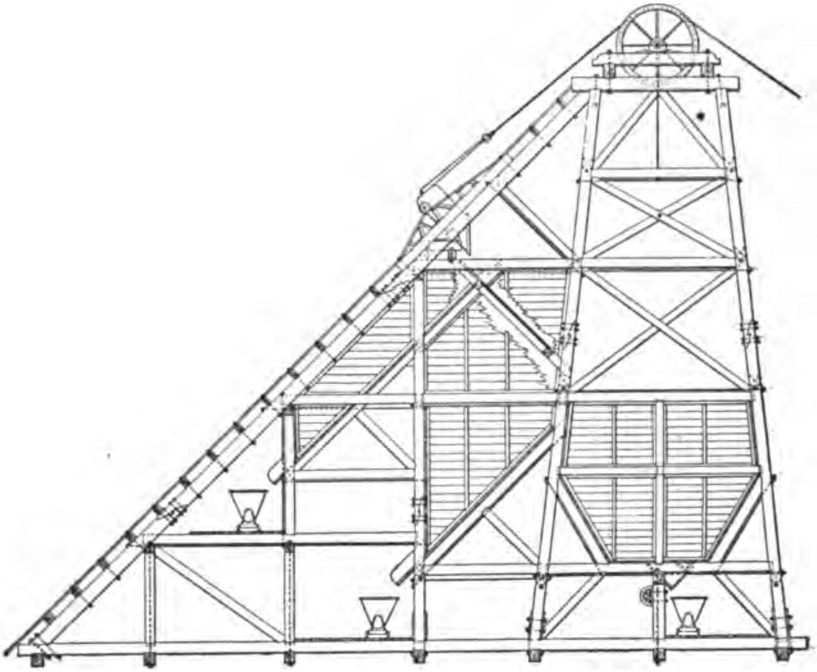

FIG. 1.

Milling.—The mills are built after the American type, fitted with mortars similar to those employed in the Black Hills. These have, however, been slightly improved and adapted to suit the class of rock crushed. Owing to the friability of the conglomerate, which is the material containing the gold, about 5 tons per stamp per day can be crushed. This is done through a 30-mesh steel wire cloth, which is no doubt coarse as compared with the practice in America and other countries; but it has been found that owing to the gold being deposited on the outside of the pebbles it is not necessary to reduce the material to a smaller size than is obtained by the use of the above-mentioned sieving.

The mortar-boxes are fitted with amalgamated copper plates, one plate being at the back of the mortar, and the other fixed to the chuck-block, *i.e.*, a piece of wood that goes in underneath the screen. Several of these of different heights are employed, so that they can be altered in proportion to the wear that takes place on the dies. By this means the discharge is kept at a regular height, and consequently the crushing goes on uniformly. Outside the mortar is fitted an apron or table covered with ⅛-in. copper and the full width of the mortar.

It has become the practice with several mill-men to add a longer head as the shoe wears down, so that the weight of the stamps remains more or less the same. It is claimed that the time lost in making the exchange is inconsiderable as compared with the advantages gained by getting through more rock through having a stamp of uniform weight. Personally I cannot corroborate this, although I assume that the statement is correct, since the practice is becoming universal. The weight of the stamps in general use is about 1,200 lb., and they fall at the rate of 94 to 96 drops per minute.

After the pulp leaves the copper tables it is by some concerns run over vanners to eliminate the pyrites and heavier gold that escapes amalgamation. This method is followed only with the richer ores. The concentrates from the vanners are treated by cyanide, or roasted and chlorinated. Owing to 5 tons of rock per stamp being crushed it has been found necessary to put in three vanners to each five stamps. This of course makes a very expensive plant, and is only profitable in cases where *over* 7 or 8 dwt. rock is being worked. For ores of this value or slightly *under*, the pulp, after passing from the copper plates is conducted into a spitzlutten (similar to the hydraulic separators used elsewhere) by which a concentration is effected. Although this does not begin to compete with the concentration done by vanners, still on poor ores it is preferable, since with 7 or 8 dwt. rock the extra saving is hardly sufficient to warrant the large outlay that would be necessary in installing vanners.

Treatment of Tailings.—The tailings from the plates are subjected to one of three methods of treatment: (1) They are run into a settling pond for storage; this involves rehandling and the further disadvantage of oxidation of the sulphurets, which is objectionable in the subsequent treatment with cyanide; (2) they are concentrated in spitzlutten or on vanners and the concentrates treated by cyanide or chlorination; (3) they are run directly into tanks for treatment by cyanide. It has been generally accepted that a double treatment, first in one tank and then in another is the best method. This is accomplished most economically by placing one tank directly under another. The general arrangement of a South African cyanide works is shown in Fig. 2.

The level surface of the Rand necessitates the elevation of the tailings to a sufficient height for treatment through all the stages. This is done either by means of a pump or preferably by tailings-wheels. In these wheels the buckets are fixed on the inside, discharging into a launder at the top. Launders in these works have a grade of 3 to 4%, depending upon the class of ore crushed and the quantity of water used.

The tailings, after being elevated, are often concentrated in a series of spitzlutten, which effect a concentration of about 6 : 1, and take out perhaps about 1 dwt. gold per ton from the tailings leaving the mill. At the Crown Reef, for instance, the ore assays 11 dwt. before milling. The tailings leaving the plates contain about 6 dwt.; after leaving the spitzlutten about 5 dwt. Whether having received a preliminary classification or not the tailings pass into a spitzkasten to separate the slimes, which amount to 20 to 30% of the tailings. The slimes, which may assay about 4 dwt. per ton, and the tailings assaying 5 dwt. 8 gr. per ton, are treated separately. The slimes having been settled with assistance of lime are treated in tanks, where they are kept always in a semi-liquid state, containing about 50% water. Owing to the fineness of the gold in them the time required for solution is very short. The gold-bearing liquor is precipitated electrically, the strongest solution used in this process being 0.08% KCN. The zinc process is not used in the slimes treatment on account of the precipitation of carbonate of lime on the zinc. The slimes receive a double treatment, the time required for each being about 24 hours. The actual extraction at the Robinson slimes plant is about 80%.

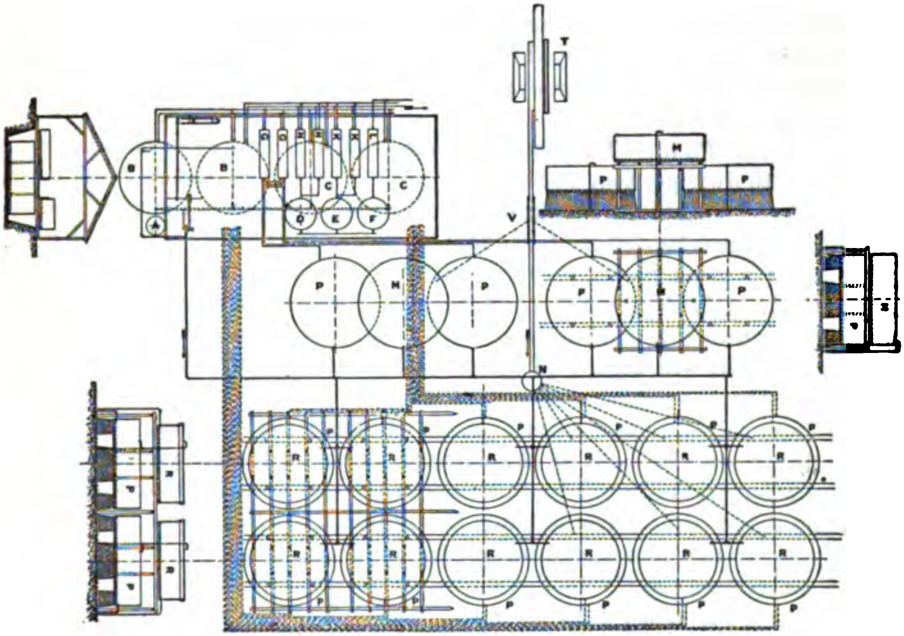

FIG. 2.

The sand from the separators is leached in wooden filter tanks, the construction of which has been described frequently. Iron tanks are now coming into considerable use and are of course much preferable to wooden tanks, on account of the less danger of loss through leakage. They are made of sheet iron about ¼ in. thick.

The tailings are run from the separator into the upper tank. When this is filled to about 6 in. from the top it is allowed to stand awhile to drain, after which a 0.15% KCN solution (following perhaps a preliminary caustic soda wash) is allowed to percolate through it. These solutions having drained off thoroughly the charge is emptied through the bottom door into the lower tank, where the second solution (0.5%) is pumped on and left in contact for about three hours. The tailings are aerated in shifting from the upper to the lower tank, which is an advantage. After the second solution has drained off a 0.15% solution is run through the charge and finally a water wash. The time of treatment varies from 50 to 150 hours, according to circumstances and the size of tanks employed. A tank of 500 tons should receive a five days' treatment. The average extraction is about 78%. The cost of treatment for sand averages about 2s. 6d. per ton. Slimes are treated at the Crown Reef works for 3s. 6d.

For the precipitation of gold from the auro-potassic cyanide solution deposition on zinc shavings was generally used on the Rand at the beginning, but now the Siemens-Halske process finds much application. The latter is in use at the Rand Central Ore Reduction Co.'s works, where it has been modified by Chas. Butters, who says that the anodes employed must be absolutely insoluble in the solution, so as not to contaminate the liquor, as it is necessary that the bath should remain perfectly clear and limpid.

Future of the Rand.—The general average return up to the present has been slightly over 10 dwt. per ton, but it would appear as if the deeper level mines would improve upon this. The knowledge I have gained from the various boreholes put down has satisfied me that there is a tremendous future before the deep-levels; and it is not a matter of conjecture merely, but of certainty, that these will pay handsomely if properly conducted. Unfortunately an extravagant style of working is prevalent, and administration and wages are very high.

Other Districts.—In regard to the other districts of South Africa there have been several that at one time promised well, such as the Zoutpansberg, which has, however, fallen into disrepute owing to the leads pinching out. It is possible that when the state of the country improves, further prospecting will result in a resumption of work in this district, and possibly with success. The ore in this region differs considerably from that on the Rand, inasmuch as it is quartz similar to that found in New Zealand and Australia.

The same remarks apply to the Barberton district, which is in the De Kaap valley, where the famous Sheba mine is situated. This is also a quartz lode, and is of immense value; and should before this have given a better account of itself. Unfortunately the Sheba mine has gone through several stages of reconstruction, and has now only really begun to produce up to anything like its proper capacity. This rock is extremely tough, of a bluish color, and impregnated with the very finest sulphurets and gold. In 1885 I conducted some trial crushings, and was surprised to find that some of the gold that ran away in the tailings was as fine as mildew. Now, that they have a cyanide plant at work, no doubt a great deal of this is recovered.

There are a few other mines in the Lydenberg district that have been very promising. Their formation is quite different from the Barberton or Zoutpansberg formations, although they contain quartz. The Transvaal Gold Exploration Co.'s mineralized veins are in a horizontal formation, and it is quite as difficult to explain how they have been brought about as it is in regard to the conglomerate formations of the Rand.

GRAPHITE.

THE production of crystalline graphite in the United States in 1897 was 993,138 lb., against 405,006 lb. in 1896. In each year the production was made chiefly at Ticonderoga, N. Y.; in 1897 there were a few thousand pounds produced at Bloomingdale, N. J., which was ground for paint at Passaic. The work at Bloomingdale, however, was largely experimental, and it is expected that the mine will be in active operation during 1898. The mineral found at this place is said to be of the foliated variety, similar to the Ticonderoga graphite.

The production of amorphous graphite in 1897, which was made chiefly by one producer in Rhode Island, was 1,200 tons of 2,000 lb. This product was sold in Providence, f. o. b., at $10 per ton for lump mineral, which is equivalent to a value of $9.50 at the mine. The other producers of graphite in Rhode Island possess small deposits in the environs of Providence which have been worked spasmodically without much success.

The Rhode Island Graphite Co., which succeeded the New England Graphite Co., has in its property near Cranston a well-defined seam 18 in. wide, occurring in gneiss. The graphite shows a structure between scaly and granular; the best analysis obtained is 52% pure carbon, the remainder being silica, oxide of iron, and a trace of sulphur. The property was originally a quarry, and in making the open cut the vein has been exposed for 72 ft. The company is sinking a shaft and erecting a plant for preparing the graphite for market.

There was produced in Baraga County, Mich., 100 tons in 1896 and 600 tons in 1897 of a carbonaceous material, which is ground for paint and is improperly called graphite. It is simply a carbonaceous schist extending over several thousands of acres, without sign of any vein of graphite.

New discoveries of graphite were reported at Llano, Tex., in the suburbs of Santa Fe., N. M., and in McDowell County, N. C., a company being organized to exploit the last. Two veins of graphite were located in Halleck Canyon, Albany County, Wyo., which are reported to be of considerable width, and to yield a product containing from 60 to 70% graphite. There was no production in 1897 at any of these new localities. A plant for the manufacture of graphite was erected at Junction City, Wis., by the Portage County Graphite and Mineral Paint Co., which is opening a vein of graphite at that point.

THE GRAPHITE INDUSTRY IN THE UNITED STATES.

Year.	Production. (a)		Imports.		Consumption.	
	Pounds.	Value.	Pounds.	Value.	Pounds.	Value.
1892	1,298,363	$64,920	23,854,000	$667,775	24,652,363	$732 695
1893	882,912	39,731	28,882,000	865,379	29,764,912	905,110
1894	770,846	34,689	11,640,000	225,720	12,410,846	260,409
1895	377,450	17,286	20,124,160	260,111	20,516,168	277,751
1896	405,006	18,225	33,824,000	437,189	34,229,006	455,414
1897	993,138	44,691	19,113,920	270,952	20,107,058	315,643

(a) Production of refined graphite only; of amorphous graphite there were produced 840 short tons ($4,700) in 1895,574 short tons ($3,850) in 1896, and 1,200 tons ($11,400) in 1897.

The more part of the world's supply of graphite is obtained from Bohemia and Styria in Austria, and from Ceylon. The statistics of production are given in the following table:

WORLD'S PRODUCTION OF GRAPHITE. (IN METRIC TONS.)

Year.	Austria	Canada	Ceylon.	Germany.	Great Britain.	India.	Italy.	Japan.	Russia.	Spain.	United States. (b)	Totals.
1892	20,978	151	21,300	4,036	*Nil.*	(a)	1,645	601	82	34	707	49,534
1893	23,807	*Nil.*	21,900	3,140	*Nil.*	(a)	1,465	26	311	*Nil.*	634	51,283
1894	24,121	63	10,718	3,133	*Nil.*	1,623	1,575	1,091	(a)	10	349	42,683
1895	28,443	199	13,711	3,751	41	(a)	2,657	77	(a)	*Nil.*	171	49,050
1896	35,972	126	10,463	5,248	*Nil.*	(a)	3,148	(c)	(c)	*Nil.*	184	....

(a) Not reported in the government statistics. (b) Crystalline graphite. (c) Statistics not yet published.

Ceylon.—Rich as the island is known to be in plumbago, in iron ore and in gems, the extent of its wealth has never been scientifically ascertained. The exploiting of plumbago deposits is done entirely by the Singhalese without any scientific guidance. The government draws a royalty of 5 rupees on each ton exported. The graphite deposits of Ceylon occur in gneiss and mica schist. There were 368 pits and mines worked for this mineral in 1896.

Italy.—The deposits of graphite in the valley of Chisone have recently, according to *Rassegna Mineraria* of October 11, 1897, been purchased by a company known as the Anglo-Italian Talc and Plumbago Co., Ltd., which has its headquarters in England. Graphite is mined in the Pinerolo district in the Province of Turin. The graphite occurs there in regular beds in the lower division of the west Alpine crystalline schists. The mines near Pinerolo furnish mineral which contains 60 to 85%, the remainder consisting chiefly of silica and silicates, and is free from lime. The mines have been worked, until recently, in a very primitive way, and it is only lately that the geology of the district has been studied. The operation of the mines is now in intelligent hands, however, and the total production, which two years ago was only 3,000 metric tons, is considered likely to reach 12,000 metric tons in 1898.

GRAPHITE PAINT FOR METALLIC STRUCTURES.

A large part of the world's consumption of graphite is in the preparation of paints, which appear to be especially adapted for the protection of metallic structures. Max Toltz, in a paper read before the Civil Engineers'

Society of St. Paul, Minn., December 7, 1896,* went comprehensively into the comparative value of paints for protecting iron surfaces. The paints experimented with were (1) true asphaltic varnish paints; (2) so-called asphaltic varnishes of inferior quality; (3) black carbon paints, of which the vehicle is practically a varnish; (4) iron oxide paints; (5) graphite and silica graphite paints. Red lead was not tested; within the last 10 years this material has been to a large extent discarded by progressive engineers, and although it has still warm advocates, even they are beginning to add carbon-black or graphite to it, says Mr. Toltz. One set of tests made by Mr. Toltz consisted in painting sheet-iron dishes, 12 in. diameter by 0.5 in. deep. The scale or skin was carefully removed before painting. Two dishes were then painted with each kind of paint, one receiving one coat and the other two coats, the first coat having dried at least a week before the second was put on. After the second coat had dried thoroughly, a given amount of water was placed in the dishes and allowed to evaporate at the ordinary temperature of the room, this being repeated until the dishes showed more or less rust. After most of the water had evaporated there remained at the junction around the edge a thin film of water, which in contact with the air acted on the paint in such a way that the iron under it began to rust. In actual practice the same thing will happen, the only difference being that the rust will extend under the paint and will not show as plainly as on the dish. This is a severe test, but in Mr. Toltz's opinion no paint which fails to withstand it is desirable for the protection of iron and steel structures. The chief asphaltum paints and iron oxide paints failed under this test. Another severe test consisted in exposing sheet iron coated with various kinds of paint to a temperature of 220 to 300° F., this test being of value as showing promptly whether a paint will keep its elasticity or will become so brittle that it may be easily removed from the surface.

From our present knowledge, the following system for painting iron and steel bridges and other metallic structures is recommended by Mr. Toltz:

1. Give the iron and steel a coat of the best grade of refined linseed oil, properly boiled and settled clear; or, still better, mix linseed oil with about 10% of a good grade of lampblack; this coat to be applied at the mills, the iron or steel being first carefully freed from loose scales.

2. After the structures have been erected, give them one coat of real asphaltic varnish paint, made from the best grade of asphalt, linseed oil and gum, compounded properly, so as to form a true varnish; or of a paint made from carbon black and properly boiled varnish, compounded of the best grade of linseed oil and gum. This coat should be carefully applied by a skillful painter, after the metal has been thoroughly cleaned from all loose scale, rust, shavings, filings, shriveled oil or paint, grease, dirt or any foreign matter, because it is of the utmost importance that the paint should be spread and worked in such a way as to cover the surface properly, and be as free as possible from air bubbles and form a continuous coating. This priming or first coat should be applied fairly thick, the thickness depending, to some extent, on the nature of the paint used. Before the second coat is applied, the first should be thoroughly dried, which will require at least 10 days. If

---

* *Journal of the Association of Engineering Societies*, June, 1897.

practicable, it would be a great deal better, as well as more economical, to apply the second coat not less than four weeks after the first one.

3. As a second coat, a good grade of graphite paint is to be applied as thickly as possible, working the paint thoroughly with the brush. From the examinations made of the various grades of graphite paints, there appears to be but little difference between them, provided, of course, that the pigment contains at least 33% of pure graphite, the rest being natural rock, ground very fine in pure linseed oil. The graphite paint should be bought in paste form, well ground, and contain not less than 70% of pigment and 30%, by weight, of the best quality of boiled linseed oil; the paste should be mixed with boiled linseed oil at the place where it is to be applied. No turpentine, no benzine and no Japan or driers should, under any circumstances, be allowed in this paint.

4. There are certain parts of steel or iron bridges, viaducts or tunnels that should have an additional (third) coat of paint. These include such places, or parts of structures, as are directly exposed to the steam, fumes and gases from passing engines. For such a coat some cheaper asphalt paints, applied very thickly over the coats above recommended, would be sufficient. Such a coat would protect the underlying coats for many years, preserving their toughness and elasticity, and preventing atmospheric action on the structure.

From the investigations made, as well as from practical experiments, it appears that the iron-oxide paints are not very desirable, at least for the first coat or two, for iron or steel; but, as a third coat, for the protection of the underlying paints, they may be recommended.

However, extensive investigation of the graphite paints that can be obtained in the markets to-day shows that, if properly applied, they are far superior to iron-oxide paints for the second or third coat, especially as they withstand the action of moisture and water much better than the best iron-oxide paint so far examined. Besides, a graphite paint, in paste form, well-ground and mixed with boiled linseed oil, does not cost very much more per gallon than the cheapest iron-oxide paint in the market.

In recommending asphalt varnish paint or carbon paint for the first coat, great stress is laid upon the necessity of having the surfaces of iron or steel as free from moisture as possible while the structures are being painted, otherwise there is great danger that the coating will not adhere firmly, and that it will thus actually nullify the value of the paint. This precaution is less important when an ordinary iron-oxide paint or red-lead paint, simply mixed with linseed oil is used; because linseed oil itself has the property of absorbing moisture quite readily, whereas carbon or asphalt paint will not. The lack of this property in the two last-named paints is one of the principal reasons why they are superior to any other class of paints.

GYPSUM.

The production of gypsum is an important branch of the mineral industry in the United States, especially in Michigan, Kansas, New York, Ohio, Texas, Iowa, Virginia, and South Dakota, while it is produced in smaller amounts in California, Colorado, Oklahoma, Montana, Utah, and Wyoming. Besides the domestic supply there is a large quantity of gypsum imported on the Atlantic coast from Nova Scotia, while on the Pacific coast a small amount is brought in from Mexico. The production and imports of gypsum in the United States are given in the following tables:

PRODUCTION OF GYPSUM IN THE UNITED STATES.

(In tons of 2,000 lb.)

States.	1895.			1896.			1897.		
	Tons.	Value.		Tons.	Value.		Tons.	Value.	
		Total.	Per Ton.		Total.	Per Ton.		Total.	Per Ton
California	5,158	$51,014	$9.89	1,310	$12,580	$9.60	2,200	$19,250	$8.75
Iowa	18,600	43,710	2.35	18,631	34,020	1.83	65,000	195,000	3.00
Kansas	71,852	368,450	5.11	42,783	199,563	4.67	32,045	144,811	4.52
Michigan	80,601	174,067	2.17	56,000	112,000	2.10	48,500	97,000	2.00
New York	29,176	50,806	1.71	22,923	39,771	1.73	22,885	40,253	1.76
Ohio	33,448	101,365	3.03	21,341	45,142	2.12	16,300	33,800	2.07
South Dakota	6,400	20,600	3.22	6,260	19,060	2.05	4,800	14,900	3.10
Texas	5,670	32,045	5.56	7,972	37,229	4.67	13,729	13,729	4.52
Virginia	8,515	32,068	3.79	5,444	18,210	3.34	5,207	13,812	2.65
Other States (a)	2,265	18,120	8.00	12,889	65,541	5.08	13,195	91,071	6.90
Totals	261,685	$892,245	$3.41	195,558	$583,136	$2.98	223,861	$663,626	$2.96

(a) Includes Oklahoma, Oregon, Utah, and Wyoming, in each of which the output is reported by only one company.

GYPSUM IMPORTED INTO THE UNITED STATES. (IN METRIC TONS.)

Year.	Ground or Calcined.			Unground.			Value of Manufactured Plaster of Paris.	Total.
	Quantity.	Value.	Per Metric Ton.	Quantity.	Value.	Per Metric Ton.		
1893	3,996	$40,959	$10.25	166,929	$180,263	$1.08	....	221,222
1894	2,059	16,823	8.17	165,100	179,237	1.08	....	196,060
1895	3,348	21,526	6.42	195,630	215,705	1.10	$10,852	247,583
1896	3,348	22,058	6.58	183,165	193.549	1.06	....	215,607
1897	185,406	140,494	.76	48,173	50,981	1.06	....	191.475

Of the annual production of gypsum in the United States about 10% is sold crude and used for various purposes; about 15% is ground into land plaster; and the remainder is calcined for the manufacture of plaster of paris or stucco, losing about 25% of its weight in the calcination. Nearly all of the production in Iowa, Kansas, Michigan, Oklahoma, South Dakota, and Texas is used for the manufacture of plaster of paris. The greater part of the production in New York and Virginia, on the other hand, is used for land plaster.

Arizona.—Extensive stratified deposits of gypsum occur in the Santa Rita Mountains, in Pima County, where they were discovered by Prof. W. P. Blake in 1896. The strata stand at a high angle. Some of the layers are exceedingly tough and compact; others are covered upon the outcrop by a thick accumulation of a white, ash-like substance, chiefly sulphate of lime. The thickness of the series is estimated at over 200 ft. According to Prof. Blake they are probably of Carboniferous age. The deposits have not yet been opened and are not likely to be soon, owing to the high cost of freight from them to market.

California.—Gypsum occurs in Fresno County, where it is mined near Coalinga, and near Hayes, in the San Joaquin Valley. It occurs in disconnected bunches mixed with clay and sand, overlying the coal formation. A small deposit in Kettlemen Valley, in Kings County, has been exploited intermittently. In Los Angeles County the Alpine Plaster Co. works quarries at Palmdale, producing wall plaster, land plaster, and plaster of paris. In San Benito County, on the west side of Bitterwater Valley, 12 miles northeast of King, there is a stratum of gray gypsum 5 ft. thick, which appears to be extensive and has been worked to a small extent. There is undoubtedly a good deal of good gypsum in California that is at present unavailable on account of the high freight rates charged by the Southern Pacific Railway Co., which practically controls the inland transportation of the State. A small amount of gypsum is imported into California from Mexico.

Kansas.—The gypsum deposits of this State and the methods of mining and plaster manufacture in use there are described in the special article by Dr. Grimsley, which is appended.

Michigan.—In Michigan there are large deposits of gypsum on the Grand River, near Grand Rapids, and at Alabaster Point, Iosco County. At Grand Rapids there are five producers, and at Alabaster Point one. Nearly all of the product is converted into plaster of paris. The mining is done entirely in two or three months of the year. The gypsum of Michigan is of good quality and the supply is large.

Montana.—Large deposits of gypsum are said to exist near Neihart, and early in 1897 a mill was erected there for the manufacture of stucco.

New York.—Gypsum is quarried at the outcrop of the Salina group of the Upper Silurian in Madison, Onondaga, Cayuga, Ontario, Monroe, and Genesee counties. It is used chiefly as a fertilizer in the form of land plaster, though at Oakfield, Genesee County, a factory has been established for the manufacture of stucco and wall plaster.

Ohio.—The gypsum deposits of this State occur in the vicinity of Sandusky.

Oklahoma.—Gypsum deposits of the same character as those of Kansas are worked near Okarche in this Territory. There is one producer, the Oklahoma Cement Plaster Co., which was organized in 1897 to succeed the Cement Plaster & Mfg. Co. of the same place. The new company has been erecting a 100-ton mill to make house plaster from the gypsite dirt obtained from a deposit five miles south of Okarche, where it has 560 acres of land. It is expected to have the mill in operation by March 1, 1898.

Oregon.—An extensive deposit of gypsum exists near Huntington, in Baker County, Eastern Oregon, in the high bluffs extending along both sides of the Snake River into Western Idaho. The Oregon Plaster Co. produced 1,800 tons of rock from this place in 1896, and erected works for the manufacture of plaster of paris, but the first day they were in operation they were destroyed by fire, and have not yet been rebuilt, although it is expected this will be done during the spring of 1898. None of this gypsum has been reckoned in the production of either 1896 or 1897.

South Dakota.—Deposits of gypsum are worked for the manufacture of plaster of paris at several points in the Black Hills, especially at Spearfish, Sturgis, and Hot Springs. Several companies operating in the district were obliged to close down during 1897 for lack of proper raw material, but the works at Spearfish and Hot Springs were in operation. The Monitor Hard Plaster Co., which has a mill at Omaha, Neb., obtains its supply of gypsum from the Black Hills, but does not operate any mines on its own account.

Texas.—The gypsum deposits of this State exist principally near the town of Quanah, in the northwestern part. The deposits are similar in character to those of Kansas. The rock lying 12 ft. below the surface is covered by an overburden of the same material in a disintegrated condition, known as "gypsite" or "dirt." The latter is generally snow-white in color, a small part of it being gray. This dirt is dug by scrapers drawn by mules and is made into plaster by methods identical with those in use in Kansas. The deposits near Quanah are crossed by the Fort Worth & Denver Railroad.

Virginia.—Immense deposits of gypsum exist along the north fork of Holston River in Smyth and Washington counties, where a bed of great thickness has been traced for 20 miles. At Stuart and Buchanan's Cove, in Smyth County, it is said to be more than 600 ft. thick. It shows also at the Pearson beds and at Saltville, in Smyth County, and at Buena Vista, in Washington County. The rock is of Sub-Carboniferous age, and is mined especially at Saltville and at Buena Vista, where pits have been opened to the depth of 180 ft. and more. The composition of the rock is shown by the following analysis: Lime, 32.50%; sulphuric acid, 46.50%; water, 20.50%. Part of the product at the present time is used for land plaster and part is calcined for the manufacture of wall plaster. Formerly gypsum imported from Nova Scotia was ground at Richmond, but the duty put on this material by the Dingley bill shut off the importations completely, so far as the Richmond works are concerned.

Wyoming.—Gypsum is quarried and manufactured into plaster on a small scale near Laramie. The industry is hampered, however, by the high freight rates. Recently the Union Pacific Railway made a rate of 15c. per hundred pounds to Omaha, but since the producers of South Dakota have a 11c. rate, competition with them is not easy. The Standard Plaster Co. erected a large and modern mill near Laramie last year and manufactured a small amount of plaster.

Canada.—The gypsum industry is of considerable importance in this country, quarries being worked in Nova Scotia, New Brunswick, and Ontario, while deposits have been noted in Manitoba, British Columbia, and the Northwest Territory. Nova Scotia supplies nearly three-fourths of the total output, the larger part of which, together with nearly all of what is produced in New Brunswick, is exported to the United States, where it is used for plaster manufacture at points so remote as Richmond, Va.

The gypsum deposits of Nova Scotia exist as extensive beds associated with Carboniferous limestone, being especially abundant in Hants County in the vicinity of Windsor, Cheverie, and Walton, and in the counties of Pictou, Colchester, and Antigone, and also throughout Cape Breton Island, notably at Mabou, Lennox Ferry, and Baddeck. Large cliffs of gypsum form a striking feature of the landscape at several places on the shores of the Bras d'Or. There is practically no underground mining for gypsum in Nova Scotia, most of the output being obtained by quarrying.

The gypsum deposits of New Brunswick are found underlying the millstone grit of the Carboniferous and at the top of the Lower Carboniferous formation. It occurs in Albert, Westmoreland, King's and Victoria counties, the principal deposit being near Hillsborough, in Albert County, where the bed is from 70 to 100 ft. thick. Part of this, however, is anhydrite. The associated gypsum is mostly a pure white or slightly clouded alabaster. Calcination works were erected at Hillsborough in 1861 and have been in operation more or less constantly ever since.

Other Countries.—Gypsum is of widespread occurrence, and it is mined to greater or less extent probably in all of the important countries of the world, but aside from the United States and Canada there are official statistics of its production only in France (including Algeria), Bavaria, Cyprus, Great Britain, and India. The production of gypsum plaster in France in 1895 was 1,888,236 cu. m., valued at 16,930,254 fr., and of gypsum manure, 85,855 metric tons, valued at 648,857 fr.; in Algeria in the same year there was a production of 2,800 metric tons. The production of gypsum in Bavaria in 1896 was 28,799 metric tons, in Cyprus 1,899 metric tons (fiscal year 1895–96), in Great Britain and Ireland 196,413 metric tons (1896), and in India 6,816 metric tons (1895). There is undoubtedly a large production of gypsum in Germany outside of Bavaria. There is also a certain amount of artificial gypsum made and marketed in Upper Silesia, where the metallurgical works roasting sulphide ores are required by law to use or neutralize the fumes from the roasting furnaces, which is done at Hohenlohehütte by bringing the sulphurous acid gas in contact with milk of lime, whereby sulphate of lime is produced. This product is used as a fertilizer. A fine-grained variety of gypsum, usually white or delicately shaded, known as alabaster, is quarried extensively in Italy at Castelino, 35 miles from Leghorn, whence it is taken to Florence for the manufacture of vases, statuary, etc. Calcined gypsum gets its name of plaster of paris from its preparation originally at the Montmartre quarries near Paris, which have long been famous as sources of gypsum.

THE GYPSUM DEPOSITS OF KANSAS.*

BY G. P. GRIMSLEY.

THE gypsum deposits of Kansas occur in a belt trending from northeast to southwest across the State. The belt of exposed rock varies in width from 10 miles at the north to 20 in the central part and 60 miles near the southern line, with a length of 200 miles. The deposit is 8 ft. thick in northern Kansas, 14 ft. in the central area, 25 ft. in the southern, and further south even thicker. The area is naturally divided into three districts which are named from the important centers of manufacture. (1) The northern or Blue Rapids area in Marshall County, (2) the central or Gypsum City area in Dickinson and Saline counties, (3) the southern or Medicine Lodge area in Barber and Comanche counties. These areas appear to be separate, but careful mapping shows a number of isolated intermediate deposits which serve to connect at least two of them. Gypsum is reported from near Randolph, and in the reservoir excavation at Manhattan in Riley County. It is worked for plaster at Longford, in the southern part of Clay County, and it is found near Manchester in the northern part of Dickinson County. These smaller areas indicate a connection between the northern and central areas.

Gypsum deposits of economic importance are reported from near Peabody in Marion County, while they appear to be absent through Reno, Sedgwick, and Kingman counties, where the extensive salt deposits occur. There is thus a break between the central and southern areas which is occupied by salt deposits.

The northern area is located in the Permian beds, consisting of fossiliferous limestones and shales. The central area lies in the Permian, though higher than the northern, while the salt measures to the south occur near the top of the Permian. The southern Kansas gypsum is found in a series of red, sandy shales, called the Red Beds, which probably mark the transition from Permian to Cretaceous. The deposits, therefore, rise geologically from north to south, but they are confined to the Permian formation. The deposits to the south in Indian Territory and Texas are found in the Permian, while those at the north in Iowa are referred to the Cretaceous. An examination of a map of west central United States will show that all these deposits are on a straight line.

Three companies are now engaged in plaster manufacture in the northern area. The gypsum occurs as a mottled gray rock of saccharoidal texture. It is more or less crystalline, showing fibres and plates. When crushed the rock becomes snow white. Plaster manufacture has been carried on in this area since 1872. The rock is worked close to the town of Blue Rapids by the Great Western Plaster Co., Fowler Brothers, and Winters Plaster Co.

In the central area the rock gypsum is worked by the Crown Plaster Co. near Solomon City, and by the Kansas Cement Plaster Co. near Hope. Most of the plaster mills in the central area use the earthy gypsum deposits. This material is a granular dirt, which is dark-colored in place, but on drying it assumes a light ash-gray color. It is soft and incoherent, so that it is readily shoveled into cars and is ready for calcining with less labor and expense than is required in working the solid rock. At the present time four of these deposits are opened in the central area, plaster being now made at three of them, and a fifth deposit is

---

* This paper is based on data collected for the University Geological Survey.

worked to the north in Clay County. The first deposit was discovered near Gypsum City in 1873, and was worked in 1889. This deposit covers an area of 12 acres, and lies close to the surface, with little or no cover. The maximum depth is 17 ft. while the average is 8 ft. Rock gypsum is found a few feet below the deposit. A second deposit was found 14 miles east near Dillon, and is now owned by the Agatite Cement Co. Its extent is 40 acres, and its greatest depth 18 ft. Other deposits were found three and one-half miles southwest of Dillon and eight miles south. The Agatite company owns a second mill and deposit at Longford in Clay County, 35 miles northwest of the Dillon mill. The other companies working in the central region are the Acme Cement Plaster Co. and the Dillon Cement Plaster Co.

The Medicine Lodge gypsum of the southern area is white, and in the lower portion of the stratum very compact. This portion is used for the manufacture of terra alba at the Medicine Lodge mills. The upper portion has more of the sugary texture, and is used in the manufacture of wall plaster. This southern area is the largest in Kansas, and with its continuation in Oklahoma and Texas forms the largest gypsum area in the United States. The rock extends from near the town of Medicine Lodge westward through Barber and Comanche counties, southward into Oklahoma and Texas, and passes under the Tertiary gravels to the north. The trend of the deposit is the characteristic one of the State—northeast to southwest.

The gypsum is first seen six miles southwest of Medicine Lodge, in an isolated range of hills three miles long, and separated by a narrow valley from a second hill one mile in length. The various streams in the central part of Barber County cut out deep valleys and separate the outcrops of gypsum rock, but over the greater portion of western Barber and Comanche counties the gypsum is continuous. In the eastern part of Comanche County occurs a second gypsum layer 15 ft. thick and 15 ft. above the Medicine Lodge layer. This layer, named “shimer gypsum” by Prof. Cragin, appears to be a local deposit.

There are 11 mills in Kansas engaged in the manufacture of plaster from gypsum; seven use the gypsum rock and four use the dirt. Nearly the same process is used in all the mills of the northern and central areas, except that the mills using the dirt do not require crushing machinery.

The gypsum of Kansas in its ground, uncalcined state is used as land plaster for fertilizer, but only a small portion of the rock is so employed. Most of the mineral is calcined, and then in its finer grades it is used for dental plaster, as plaster of paris for casts and molds, and white finish for walls. It has been used with marked success for fireproof material. The greater portion of the calcined material, however, is manufactured into the form of cement or rock plaster, which in many portions of the country is displacing the ordinary lime plasters. The analyses by Prof. Bailey show the following percentages of composition:

Material.	SiO_2.	Fe_2O_3.	$CaSO_4$.	$CaCO_3$.	$MgCO_3$.	H_2O.
	Per Cent.	Per Cent.	Per Cent.	Per Cent.	Per Cent.	Per Cent.
Rock gypsum........................	0.34	0.16	76.98	1.68	1.88	19.63
Dirt near Dillon......................	12.13	0.99	64.63	3.57	0.88	16.80

IODINE.

THE sources, method of preparation, and properties of this substance were described fully in THE MINERAL INDUSTRY, Vol. II. Since that time there has been no change of importance in the supply, nearly all of that which is used in commerce being derived as a by-product from the nitrate deposits of Chile, and the output being controlled by a combination with headquarters in London. According to the latest report of this combination, the production of iodine in Chile in 1896 was restricted vigorously to the limitations of the agreement, 32 out of the 80 nitrate works in the Republic being engaged in the production. The quantity exported was 220,278 kg., being an increase of 68,877 kg. over 1895. Stocks on December 31, 1896, were 942,303 kg., which was 99,746 kg. less than at the corresponding time in 1895. The consumption in 1896 was 291,481 kg. compared with 230,972 kg. in the preceding year. The stocks on hand at the end of 1896 consequently were equal to several years' requirements. This fact, together with the knowledge that in spite of the recent reduction in price to 7.5d., the consumption has not increased to any considerable extent, practically precludes any advance in price in the near future. On the other hand, the strength of the combination is such that the large size of the existing stocks is not likely to bring about any further reduction in price, which is not to be expected except through outside competition. As to the latter there are numerous and persistent rumors. Among other things it is reported that a new Scandinavian company has been turning its attention to the production of iodine from the seaweed that abounds on the coast of that country near Jäederen.

In THE MINERAL INDUSTRY, Vol. II., a table was given showing the price of iodine from 1841 to 1893, both years inclusive. From 1893 to 1897 the price remained unchanged at 9d. less 2.5% London; in May, 1897, it was reduced to 7.5d. less 2.5%. At 9d. less 2.5% the cost was about $2.85⅝ laid down in New York, and at 7.5d. less 2.5% the cost is $2.38. The sale of the iodine being controlled by a syndicate with agents in New York as well as in Europe it can be bought at about the same price in one country as in another, the only difference being the cost of carriage, exchange, etc.

A new process for the extraction of iodine from seaweed has been patented by

A. James,[*] according to which the seaweed, wet or dry, is immersed in sea water that has previously been treated with quicklime to precipitate the magnesia, and give a distinctly alkaline reaction. In general 8 kg. of lime are sufficient for a cubic meter of water. The seaweed is added at the rate of 1 ton per cubic meter of water and left in it for 12 hours, during which time about 60% of the iodine is dissolved. The liquor is then drawn off and the seaweed is leached again for two periods of six hours each, a cubic meter of the previously prepared seawater being used each time. The weak solutions which result from the second and third leaching are employed for the primary treatment of a fresh lot of seaweed.

The solution is treated with ferrous sulphate to coagulate the mucilaginous matter, after which it is neutralized with sulphuric or chlorhydric acid in vats of 3 cu. m. capacity, provided with agitators. The iodine is then set free with nitric acid (or other suitable reagent, such as persulphate of ammonium), 1.5 kg. of nitric acid being required per cubic meter of solution. The extraction of the iodine thus set free is then effected by petroleum, of which 30 kg. is required, the treatment being repeated twice with smaller quantities of petroleum. The solution in petroleum is treated finally by agitation with caustic alkali, thus forming iodide and iodate, when can then be precipitated with potassium chlorate, or hydrochloric acid, and filter-pressed or recovered as iodide, etc. By this system it is claimed that upward of 90% of the iodine contained in seaweed may be recovered.

A practical test on a ton of seaweed containing 1.04 kg. of iodine gave a yield by this process of 663 g. in the first leaching, 252 g. in the second, and 38 g. in the third, a total of 953 g., or 91.6% of the iodine originally present.[†] The residue after the extraction of the iodine is valuable as a fertilizer.

In the treatment of dried weed a greater volume of sea water is employed in leaching, lime is substituted for ferrous sulphate as a precipitant, hydrochloric acid is substituted for vitriol in neutralizing, and a greater proportion of petroleum is used as a solvent for the free iodine.

---

[*] D. R. P. No. 95,068, March 17, 1897.

[†] *Revista Minera, Metalurgica y de Ingenieria*, April 16, 1897, p. 116.

IRON AND STEEL.

By Frederick Hobart.

Iron Ore.—The most marked feature of 1897 was the growth in production of the Lake Superior region, whence the shipments were 12,469,438 long tons. Not all of this ore entered into consumption, however, the stocks held at Lake Erie ports at the close of the shipping season having been larger by 968,771 tons than at the close of 1896. The approximate consumption of Lake ores in 1897 was therefore 11,500,667 tons.

The next producers of importance in quantity are the mines of the Southern States, which maintained a very steady output throughout the year. In the East there was little change in 1897. The Cornwall mines and some smaller mines in Pennsylvania about maintained their output. In New Jersey only two mines of any importance were in operation. The Hudson River and Lake Champlain ore districts increased their output slightly, as did also the Berkshire region in Massachusetts, Connecticut and Eastern New York. The output from the Ohio and other local mines in the West changed but little.

The imports of iron ore declined to 489,970 long tons, against 682,806 tons in 1896, and 524,153 tons in 1895. The larger part of these imports were from the Cuban mines. A few cargoes of Spanish ore were received, but very little was drawn from the Greek and Algerian mines, which were called upon to furnish some ore in 1895. Two experimental cargoes were received from a newly opened deposit on the Orinoco River in Venezuela, which has been acquired by an American company and is said to be of great extent. There was some talk of imports from the Newfoundland mines, which are being worked by the Novia Scotia Steel Co., but only a small experimental lot was received.

The following table shows the production and consumption of iron ores in the United States. The column of percentages shows approximately the proportion of the total make of pig iron from each class of ore.

District.	1896.		1897.	
	Long Tons.	Per Cent.	Long Tons.	Per Cent.
Lake Superior	9,395,556	65.4	11,500,667	71.5
Eastern, Ohio, and other local	1,644,900	9.5	1,587,600	8.0
Southern States	4,384,500	20.3	4,233,700	17.7
Imported	682,806	4.8	489,970	2.8
Total consumed	16,107,762	100.0	17,811,937	100.0
Increase in stocks	575,500	....	995,000	....
Total mined in the United States	16,000,456	....	18,316,967	....
Total values	$31,200,889	....	$31,188,844	....

The values of iron ore were less in 1897 than in 1896, chiefly because of the lower range of prices charged for Lake ores. The quotations which were maintained throughout the season in 1896 were $4 for standard Bessemer ores and an average of $2.85 for non-Bessemer. In 1897 the average for Bessemer ores was $3.50 and for non-Bessemer $2.40. At these rates the Lake ore in a ton of pig iron in 1897 cost about $5.83 for Bessemer and $4 for other irons, against $6.67 and $4.75 respectively in 1896. The consumption of limestone for flux (according to the American Iron and Steel Association) amounted in 1897 to 4,247,688 long tons, an average of 0.44 per ton of iron, and an average cost of 16c. per ton. The average consumption of iron ore per ton of pig was 1.84 tons in 1897, against 1.87 tons in 1896.

Pig Iron.—The first of the accompanying tables shows the production of iron in long tons for four years, as reported by the American Iron and Steel Association, and classified according to fuel used. Following this table we find that the gain in production in 1897, as compared with 1896, was wholly in coke iron, which showed an increase of 1,298,221 tons, while there was a decrease in anthracite pig of 213,635 tons and in charcoal iron of 55,033 tons.

Anthracite iron was made only in New Jersey and Eastern Pennsylvania. The output in New Jersey, 95,696 tons, was all the iron made in that State. That in Pennsylvania, 837,081 tons, was 18% of the total production of the State. Of the total number of anthracite furnaces standing, less than one-third were in blast at any time during 1897.

The furnaces of five States made charcoal iron only—Massachusetts, Connecticut, Georgia, Texas, and Michigan. All of these States are small producers. Michigan, the largest, is credited with only 132,578 tons, which was more than half of all the charcoal iron made; this is from Lake ores. There is also some charcoal iron made from Lake ores in Wisconsin, 16,917 tons in 1897. The rest of this class of iron comes from the Hanging Rock region in Ohio, from a few scattered furnaces in the South, from a single furnace in Pennsylvania, run on Cornwall ore, and from the few furnaces located on the outskirts of the Berkshire Hills. The demand for charcoal iron for a few special purposes is still maintained, notwithstanding the inroads steel has made, notably in its use for boiler-plates, car-wheels and castings for locomotive and other special work.

PRODUCTION OF PIG IRON IN THE UNITED STATES. (IN LONG TONS.)

According to Fuel Used.	1894—Tons.	1895—Tons.	1896—Tons.	1897—Tons.
Anthracite	914,742	1,270,899	1,146,412	932,777
Coke	5,520,224	7,950,068	7,166,471	8,464,692
Charcoal	222,422	225,341	310,244	255,211
Totals	6,657,388	9,446,308	8,623,127	9,652,680

Kind of Iron.	1895.		1896.		1897.	
	Tons.	Per Cent	Tons.	Per Cent.	Tons.	Per Cent
Foundry and forge iron	3,650,889	38.7	3,499,899	40.6	3,127,010	32.4
Bessemer pig	5,623,695	59.5	4,654,955	54.0	5,795,584	60.0
Basic pig	....	....	336,408	3.9	556,391	5.8
Spiegeleisen and ferro-manganese	171,724	1.8	131,940	1.5	173,695	1.8
Totals	9,446,308	100.0	8,623,127	100.0	9,652,680	100.0

States.	1892.	1893.	1894.	1895.	1896.	1897.
Alabama	915,296	726,888	592,392	854,667	922,170	947,831
Colorado	32,441	45,555	78,669	58,508	45,104	6,582
Connecticut	17,107	12,478	7,416	5,615	10,187	8,336
Georgia	9,950	39,675	40,268	31,034	15,593	17,092
Indiana	7,700	5,567	....	....	....	....
Illinois	949,450	405,261	604,795	1,006,091	925,239	1,117,239
Kentucky	56,548	47,501	33,854	63,780	70,660	85,899
Maryland	99,131	151,773	5,600	10,916	79,472	193,702
Massachusetts	7,946	7,853	156	4,710	1,873	3,284
Michigan	184,421	117,538	95,171	91,223	149,511	132,578
Minnesota	14,071	10,373	....	....	....	....
Missouri	57,020	32,360	6,522	27,518	12,548	23,883
New Jersey	87,975	74,305	63,273	55,502	59,153	95,696
New York	310,395	191,115	175,185	181,702	206,075	243,304
North Carolina	2,906	2,843	....	323	2,151	....
Ohio	1,221,918	875,265	900,029	1,463,789	1,196,326	1,372,889
Oregon	7,628	4,739	1,000	....	....	....
Pennsylvania	4,193,805	3,643,022	3,370,152	4,701,163	4,024,166	4,631,634
Tennessee	300,081	207,915	212,773	248,129	248,338	272,130
Texas	8,613	6,257	4,671	4,682	1,221	6,175
Virginia	342,847	302,856	298,086	346,589	386,277	307,610
West Virginia	154,793	81,591	80,731	141,968	108,569	132,907
Wisconsin	174,961	181,773	91,595	148,400	153,484	108,909
Totals	9,157,000	7,124,502	6,657,388	9,446,308	8,623,127	9,652,680

District.	1896.		1897.	
	Tons.	Per Cent.	Tons.	Per Cent.
New England, New York, and New Jersey	277,318	3.2	350,690	3.6
Maryland	79,472	0.9	193,702	2.0
Pennsylvania	4,024,166	46.7	4,631,634	48.0
Ohio	1,196,326	13.9	1,372,889	14.2
Illinois	925,239	10.7	1,117,239	11.6
Wisconsin and Michigan	307,995	3.6	236,487	2.4
Southern States	1,753,758	20.3	1,718,469	17.8
West of Mississippi	58,873	0.7	36,640	0.4
Totals	8,623,127	100.0	9,652,680	100.0

In the East, if we except the small quantity of charcoal iron referred to above, about one-third of the output was anthracite pig made in New Jersey, and the rest coke iron made largely from Lake Champlain and Hudson River ores, We have separated Maryland from the other seaboard States because its production is in the hands of a single company, and because it is the only State in which iron is made largely from imported ores.

The increase in production in 1897 came almost entirely from Pennsylvania, Ohio, and Illinois—and in Pennsylvania the gain was in the western section. The three States named made in 1897 a total of 73.8% of the entire output, against 71.3% in the preceding year. The advantages of Illinois as a seat for the iron industry are shown in its increasing make of pig iron.

The decrease in the States south of the Potomac and east of the Mississippi was almost wholly in Virginia. Alabama, which makes more than half the iron credited to that section, showed a substantial increase. Until quite recently the production of the South has been almost wholly foundry and forge iron. In Alabama a beginning has been made in the manufacture of basic pig and its conversion into steel, which promises to increase largely.

The production west of the Mississippi was limited to three States—Missouri, Colorado, and Texas, and in Missouri and Texas the production is not increasing. No pig iron was made on the Pacific coast.

Basic pig was first reported separately to the Iron and Steel Association in 1896. The large proportionate gain of 219,988 tons, or 65.5%, in 1897 shows that the demand for it is increasing. Foundry and forge iron, however, showed a decrease in 1897. The gain in output was wholly in Bessemer pig iron made with Lake Superior ores.

The following table shows, in long tons, the production, imports, exports, and the approximate consumption of pig iron in the United States. In this statement only the stocks held by furnaces are included. The stocks in consumers' hands probably varied little and would hardly affect the result.

PRODUCTION AND CONSUMPTION OF PIG IRON IN THE UNITED STATES.

Year.	Production.	Imports.	Exports.	Stocks.	Consumption.	
					Totals.	Per Capita. Pounds.
1893............	7,124,502	54,394	24,570	662,068	6,998,374	287
1894............	6,657,388	15,582	24,480	597,688	6,648,490	241
1895............	9,446,308	53,232	26,164	444,332	9,626,732	315
1896............	8,623,127	56,272	61,071	847,686	8,214,974	261
1897............	9,652,680	19,212	262,686	792,526	9,464,366	291

The returns for 1897 show clearly that the center of pig iron production has definitely passed to the Central West, the district of which Pittsburg, Cleveland, and Chicago are the industrial centers. It will remain there for a long time to come, since that region has the most abundant and cheapest supplies of fuel, and can obtain its iron ores at a low cost. So long as these conditions last, which will be as long as the iron ore of Lake Superior lasts, this district named will practically control the production.

The South has great advantages in the proximity of fuel and ores, and can make pig iron at a somewhat lower cost than any other section of the country. The growth of consumption, however, is in the direction of steel and not of foundry iron, and to maintain and extend their position the Southern iron makers must continue the work begun at Birmingham and make steel as well as iron if they are to utilize properly their natural advantages.

Steel.—The production of steel in the United States is given by the American Iron and Steel Association as follows, in long tons.

PRODUCTION OF STEEL IN THE UNITED STATES. (IN TONS OF 2,240 LB.)

Kinds.	1893.	1894.	1895.	1896.	1897.
Bessemer........................	3,215,686	3,571,313	4,909,128	3,919,906	5,475,315
Open-hearth....................	737,890	784,936	1,137,182	1,298,700	1,631,843
Crucible........................	63,613	51,702	67,666	62,500	65,600
Miscellaneous..................	2,806	4,081	858	900	1,750
Total tons...................	4,019,995	4,412,032	6,114,834	5,582,606	7,174,508
Total metric tons..........	4,084,305	4,482,592	6,212,671	5,366,518	7,289,300

The production shows a very large increase in Bessemer steel. The demand for rails, plates, and other forms, which showed a great increase during 1897, could most readily be met by the Bessemer converters, and during the second half of the year they were all at work.

Nearly all the rails made in the United States are of Bessemer steel. The following table shows the production of rails for six years, in long tons, and the proportion to the total output of ingots:

Year.	Tons Ingots	Tons Rails.	Per Cent.	Year.	Tons Ingots	Tons Rails.	Per Cent.
1892	4,168,435	1,458,732	35.1	1895	4,909,128	1,266,081	25.8
1893	3,215,686	1,036,353	32.2	1896	3,919,906	1,102,892	28.1
1894	3,571,313	904,020	25.3	1897	5,475,315	1,614,399	29.4

Of the rails made in 1897 there were 85,117 tons light rails, under 45 lb. to the yard; 1,193,771 tons between 45 and 85 lb.; and 335,511 tons over 85 lb. There has been a rapid increase in the size of rails in recent years; not long ago 56 lb. was the standard and 65 a heavy rail, while now 75 lb. is much nearer the standard, 90 and 100 lb. are not uncommon, and 110-lb. rails are made.

Wire rods form another important item in the consumption of steel. The production and consumption of these rods in the United States in 1896 and 1897 was as follows, in long tons:

Production.	1896.		1897.	
	Tons.	Per Cent.	Tons.	Per Cent.
Steel	621,518	96.7	968,717	98.1
Iron	2,478	0.4	2,019	0.2
Totals	623,986	97.1	970,736	98.3
Imports	18,977	2.9	16,415	1.7
Total consumption	642,963	100.0	987,151	100.0

The production for 1897 was far in excess of that for any previous year. In 1895 the total reached 791,130 tons, and in 1894 it was 673,702 tons. The increase in production in 1897, as compared with 1896, was no less than 346,750 tons, or 55.6%. The imports showed a decrease; they are chiefly of charcoal iron and steel from Sweden and Norway, which are used for making certain special wires. The increased demand came from a number of trades, and was especially large for nails, fencing, and bicycle manufacture. Steel is now almost the sole material for wire, the quantity of iron being insignificant.

In the production for 1897, Pennsylvania is credited with 351,676 tons; Ohio, 265,317 tons; Indiana and Illinois, 259,272 tons; New England, New York and New Jersey, 94,471 tons. The increase was distributed quite evenly among the producers.

Pennsylvania furnished 3,060,049 tons of the Bessemer ingots in 1897 and Ohio 1,041,541 tons. Pennsylvania mills made 1,024,386 tons of the rails.

Open-hearth steel is coming yearly into greater demand for bridge and structural material and other engineering work.

OTHER COUNTRIES.

Canada.—The iron production of Canada does not increase. The total for 1897 was 45,750 short tons (41,500 metric tons), which came chiefly from the furnaces at Londonderry in Nova Scotia, at Hamilton in Ontario, and at Radnor in Quebec. Projects are being worked out for an enlargement of the industry in Nova Scotia, using Cape Breton coal and Newfoundland ores; but their realization is still in the future.

Great Britain.—The pig iron production of Great Britain, which in 1896 reached the highest point recorded up to that time, again showed an increase in 1897. The total repórted by the British Iron Trade Association for the year was 8,789,455 long tons (8,930,086 metric tons), while that for 1896 was 8,563,209 long tons (8,701,220 metric tons); showing a gain last year of 226,246 long tons, or 2.7%. The statistics are not so carefully kept as our own with respect to the kinds of iron; but approximately the total was made up by 4,493,260 long tons of steel pig, Bessemer and basic; 4,190,848 tons foundry and forge iron; and 61,003 tons of speigeleisen. Some basic pig was, however, included in foundry and forge iron, and the reports for spiegeleisen are not complete, as some districts include it in their statements with Bessemer pig. Not only was the production large, but the unsold stocks at the close of 1897 were less by 314,885 tons than at the beginning of the year; so that the total pig iron consumed or exported in 1897 was 9,104,340 long tons. As the exports for the year were 1,200,746 tons, the quantity left for home consumption was 7,903,594 tons; to which is to be added 100,000 tons of American pig imported. The approximate consumption of raw iron in the United Kingdom was, therefore, 8,000,000 tons.

PRODUCTION OF STEEL IN GREAT BRITAIN. (IN TONS OF 2,240 LB.)

Kind.	1896.					1897.				
	Acid.		Basic.		Totals.	Acid.		Basic.		Totals.
	Tons.	Per Ct.	Tons.	Per Ct.	Tons.	Tons.	Per Ct.	Tons.	Per Ct.	Tons.
Open-hearth....	2,145,268	93	172,287	7	2,317,555	2,393,718	92	208,088	8	2,601,806
Bessemer.......	1,357,580	75	458,262	25	1,815,842	1,374,339	73	509,816	27	1,884,155
Totals........	3,502,848	85	630,549	15	4,133,397	3,768,057	84	717,904	16	4,485,961
Metric tons..	3,665,573	....	640,638	....	4,306,211	3,828,346	....	729,390	....	4,557,736

The number of Bessemer converters at the close of 1897 was 82; the average number at work during the year was 70. The average output per converter for the year was therefore 26,916 tons. It is noticeable that no new Bessemer converters were under construction at the close of the year.

The total number of open-hearth furnaces in Great Britain at the close of 1897, including those under construction, was 372, of which 331 were acid and 41 basic. The average number at work during the year was 300, of which 268 were acid and 32 basic. The average yearly output per furnace was, therefore, acid, 8,909 tons; basic, 6,503 tons; all furnaces, 8,673 tons.

The increase in basic open-hearth steel was relatively less than that in basic Bessemer; the latter showed the largest amount ever made in one year. The basic process, however, gains but slowly, as the greater part of the steel pig is made from low phosphorus ores. The British iron makers, however, are turning more and more each year for their supplies of ore to the great deposits in the north of Sweden, and most of these ores are better adapted for making basic pig. The cost of Spanish ores is gradually increasing, and the more easily exploited deposits near the coast are gradually being exhausted.

The open-hearth steel was manufactured chiefly into plates, bars, bridge and structural shapes, railroad tires and castings. The Bessemer steel went principally into bars, rails, and ties. The total production of rails in 1897 was 952,825 long tons, of which 921,131 tons were made of Bessemer steel.

The Cleveland district in 1897 led in the production of open-hearth steel, with 895,313 long tons; Scotland came second with 812,695 tons, and Wales third with 415,659 tons. In Bessemer South Wales comes first with 495,370 tons; Cleveland second with 415,464 tons, and Cumberland third with 335,310 tons. Two-thirds of all the basic steel was made in the Cleveland district.

In Great Britain as in the United States, the use of steel is greatly reducing the output of wrought iron, which is decreasing year by year. This is especially the case in the important shipbuilding industry, in which the use of mild steel is almost universal.

Nearly all branches of the iron and steel trade in Great Britain were active in 1897, notwithstanding the protracted strike of the engineers (machinists) which interfered with the manufacture of machinery and to some extent with shipbuilding. The only section of the trade which was really in bad condition was the tin-plate manufacture.

Germany.—The iron production in Germany continued to show an even and steady growth, as it has done for several years past. The production of pig iron, as reported by the German Union of Iron and Steel Makers is given below in metric tons, carefully classified as to the descriptions of iron made:

PIG IRON PRODUCTION OF GERMANY. (IN METRIC TONS.)

Description.	1896.		1897.	
	Tons.	Per Cent.	Tons.	Per Cent.
Foundry irons	903,665	14.2	1,126,408	16.4
Forge iron	1,689,200	26.6	1,619,556	23.5
Bessemer pig	515,352	8.1	577,947	8.4
Thomas (basic) pig	3,252,765	51.1	3,565,156	51.7
Totals	6,360,982	100.0	6,889,067	50.0

The total increase in 1897 was 528,085 tons, or 8.3%. While all other descriptions of iron showed gains, it will be noted that there was an actual decrease of 69,644 tons in forge iron, showing that the displacement of wrought iron by steel continues. The use of the basic process, which was early enforced on the German ironmasters by their large supplies of high phosphorus ores, is still supreme, the proportion of Bessemer pig made being very small. In all steel pig was 60.1% of the total make in 1897, against 59.2% in 1896. The increase in foundry iron was chiefly exported.

THE PRODUCTION OF STEEL IN GERMANY. (IN METRIC TONS.)

Description.	1896.		1897.	
	Metric Tons	Per Cent.	Metric Tons	Per Cent.
Converter	3,004,615	69.9	3,234,214	71.3
Open-hearth	1,292,832	30.1	1,304,423	28.7
Totals	4,297,447	100.0	4,538,637	100.0

The total increase in steel in 1897 was 241,190 tons, or 5.6%. This was almost wholly in converter steel, in which the gain was 229,599 tons, or 7.6%, that in open-hearth metal being 11,591 tons, or 0.9% only. The returns do not distinguish the steel made by the acid and the basic processes; but approximately 87% of the German steel is basic steel.

It is in Germany that the saving of by-products has been most carefully studied and carried to the furthest point. By-product coke ovens are found everywhere; blast-furnace gases are utilized in many places; slag is made into brick, paving-blocks, and road-metal; and the slags from the basic steel furnaces are an important source of revenue, when sold to the fertilizer-makers for their phosphoric acid contents. It is this saving of by-products and attention to details which has enabled German ironmasters, working largely on 35 or 40% ores, to compete with the richer ores and cheaper fuel of Britain.

Austria-Hungary.—The iron industry of Austria, which is most important in Bohemia and Styria, showed a fair improvement in 1897. Hungary, which is one of the oldest iron-making countries in Europe, also showed an advance. The Hungarian iron manufacture has started on a new development in recent years, and is being gradually worked up, in spite of some disadvantages in the quality of fuel available. The output of pig iron in 1897 was 1,205,000 metric tons, an increase of 75,000 over 1896. That of steel also showed a gain, from 520,000 tons in 1896 to 553,000 tons in 1897.

Belgium.—The output of pig iron in Belgium was the largest reported for several years. The total for 1897 was 1,024,666 metric tons, an increase of 91,886 tons, or 9.8% over 1896. The total in 1897 included 77,935 tons foundry iron; 496,636 tons forge iron; and 450,095 tons steel pig. Belgium also imports a considerable quantity of pig iron from Germany. The output of wrought iron in sheets, plates, bars, etc., was 478,858 tons, an increase of 15,174 tons over 1896. The production of steel ingots was 616,604 metric tons, an increase of 17,849 tons over 1896. The production of steel in finished forms was 525,731 tons, a gain of 6,420 tons.

France.—In common with all the other European producers, France reports a prosperous iron trade in 1897. The make of pig iron, as reported by the *Comité des Maitres de Forges,* was 2,472,143 metric tons, an increase of 138,441 tons, or 6% over 1896. The output of steel ingots was 1,281,595 tons, a gain of 121,625 tons, or 10.5%. This includes both converter and open-hearth steel, which are not reported separately. The division is nearly even, though a little more converter steel is usually made. The greater part of the open-hearth and nearly all the converter metal is made by the acid process. The production of finished steel was 959,254 tons, an increase of 42,437 tons; and of wrought iron 828,273 tons, an increase of 485 tons.

An important event to the French iron trade in 1897 was the discovery of deposits of oölitic or minette ores at Briey. The extension of the iron ore beds of Alsace in that direction had long been suspected, and systematic exploration at last revealed the existence of workable deposits. The full extent of these is still to be determined, but there is believed to be a large supply.

Russia.—The iron industry in Russia is still in its infancy, and is capable of very great development as the great resources of the country in ores and fuel are opened up by new transportation lines. In 1897 there was a substantial growth. The total output of pig iron in 1897 is reported at 1,857,000 metric tons, a gain of 227,190 tons over 1896. The steel production was 831,000 tons, an increase of 206,000 tons. Of the pig iron made, 723,500 tons were in South Russia and 253,000 tons in Poland.

The government is now having a careful examination made of the deposits of iron ores and fuel in Siberia which lie near the line of the Siberian Railroad or can be reached by branch lines. It is proposed to develop those which are valuable on an extensive scale.

Spain.—The very large output of ore from the Spanish mines is chiefly exported. According to Señor Roman Oriol, the total production of ore in 1897 was 7,468,500 metric tons, of which 6,884,244 tons were exported; the figures for 1896 were 6,762,582 tons and 6,274,588 tons respectively. The production of pig iron in 1897 was 297,100 metric tons. The output of steel was 101,800 tons, of which 63,200 tons were Bessemer, and 38,600 tons open-hearth steel.

Sweden.—The charcoal iron of Swedish manufacture continues in demand for its special qualities, and a large proportion of it is exported. The producduction of steel is steadily increasing, and a considerable part of it is also exported, in billets and in finished forms. The output of pig iron in 1897 was 533,800 metric tons, an increase of 67,400. The quantity of charcoal blooms made was 189,000 tons, an increase of 3,500 tons. The steel made was 268,300 tons—107,500 tons Bessemer and 160,800 tons open-hearth—a gain of 17,700 tons, wholly in open-hearth steel.

The great iron ore deposits of Lulea and Gellivaara in Northern Sweden are being actively developed, but almost wholly for export. These ores carry too much phosphorus to permit them to be used in making "Swedish" iron, and the ironmasters have wisely confined themselves to their special brands, relying on high quality to preserve the market for their products.

Other Countries.—No other European country is an important producer. In Italy the output is limited by the lack of fuel supplies. The output of pig iron was 12,500 tons only; that of steel, made chiefly from imported pig, was 57,250 tons. Greece is an exporter of iron ore, but not a maker of iron. There is a little iron made in the Danubian States.

Outside of Europe and North America the production of iron is small. In Colombia, Venezuela, and some other South American countries there are abundant iron ores which are still to be utilized. In Asia, China presents great possibilities, which may be utilized before long under foreign direction. Japan is projecting large steel works, though production has been heretofore limited by scarcity of suitable iron ores. Australasia makes no iron, though fuel is fairly abundant, and iron ores exist, especially in New South Wales. The iron ores of Africa must be regarded as a reserve for the future; at present the production is extremely small and iron is made only in very primitive fashion, except in the French colony of Algeria.

PRODUCTION OF PIG IRON AND STEEL IN THE PRINCIPAL COUNTRIES (IN METRIC TONS.)

Year.	Austria-Hungary.		Belgium.		Canada.	France.		Germany.		Italy.		Russia.	
	Pig Iron	Steel.	Pig Iron.	Steel.	Pig Iron.	Pig Iron	Steel.	Pig Iron	Steel.	Pig Iron.	Steel.	Pig Iron	Steel.
1892	940,284	*a*480,000	753,268	260,037	38,514	2,057,300	682,000	4,937,461	*a*2,600,000	12,729	56,543	*a* 919,614	871,199
1893	962,707	*a*485,000	745,264	273,058	50,754	2,003,100	664,000	4,986,030	*a*2,600,000	8,038	71,380	1,160,737	390,000
1894	1,054,520	*a*490,000	810,940	396,914	45,327	2,077,647	663,264	5,559,322	*a*2,700,000	10,829	54,614	1,312,760	422,500
1895	1,075,000	*a*435,000	829,135	455,550	38,434	2,005,889	899,676	5,788,798	*a*3,941,300	*a*10,500	50,314	1,454,298	574,112
1896	1,130,000	*a*520,000	932,780	508,755	42,164	2,333,702	1,159,970	6,360,982	4,297,447	11,287	59,500	1,629,810	*a*625,000
1897	1,205,000	553,000	1,024,666	616,604	41,500	2,472,143	1,281,595	6,889,087	4,538,637	12,500	57,250	1,857,000	831,000

Year.	Spain.		Sweden.		United Kingdom.		United States.		All Other Countries.		Totals.	
	Pig Iron.	Steel	Pig Iron	Steel.	Pig Iron	Steel.	Pig Iron	Steel.	Pig Iron	Steel	Pig Iron.	Steel.
1892	247,329	56,490	485,664	158,978	6,817,274	2,966,522	9,304,428	5,001,494	*a*350,000	*a*250,000	26,863,865	12,888,263
1893	260,450	71 200	453,421	221,780	7,089,318	2,983,000	7,239,806	4,084,805	*a*350,000	*a*250,000	24,229,025	12,098,963
1894	260,000	70,000	459,132	205,865	7,364,745	3,050,000	6,757,248	4,482,592	*a*350,000	*a*250,000	26,058,970	12,785,749
1895	206,430	65,000	455,200	231,900	8,022,006	3,444,201	9,597,449	6,212,671	*a*375,000	*a*275,000	29,858,439	16,659,005
1896	246,326	104,577	466,400	250,600	8,700,220	4,306,211	8,761,197	5,366,518	396,000	290,000	31,009,831	17,581,131
1897	297,100	101,800	533,800	268,300	8,930,086	4,559,736	9,807,123	7,289,300	450,000	310,000	33,520,005	20,407,222

(*a*) Estimated.

The great totals of 33,520,000 metric tons of pig iron and 20,407,222 tons of steel have never before been equaled; but there seems every probability that they will be exceeded in 1898.

RECOVERY OF BY-PRODUCTS FROM IRON BLAST FURNACES.*

AT present there is recovered in blast-furnace practice in Scotland from 170 to 180 lb. of tar compounds per ton of coal and 20 to 24 lb. of sulphate of ammonia. The amount of nitrogen contained in Scotch coals is equivalent to that which is contained in about 120 lb. of ammonium sulphate. In the manufacture of household gas the source of ammonia recovery is entirely from the volatile constituents of the coal, which contain only one-half of the available nitrogen, the other half being retained in the coke. The ideal slow distillation which takes place in a gas-works retort—conditions most favorable for a high yield of tar and ammonia—cannot be hoped to be surpassed in a blast furnace, so that on comparing the 23 lb. of sulphate of ammonia recovered in gas-works practice with the 20 to 24 lb. recovered from blast furnaces, the conclusion is forced that there is little hope of increasing the yield of ammonium sulphate above this amount from blast furnaces.

The effect of temperature on ammonia recovery is very important. When the iron ore, coal, etc., comprising the burden of the furnace are very wet the upper

---

* F. W. Paul, Presidential Address West of Scotland Iron and Steel Institute, October, 1897.

zone is so abnormally cooled that little or no distillation of the hydrocarbons takes place until the water is driven off, which then results in a sudden change to higher temperature, which is sufficiently high to decompose some of the hydrocarbons and ammonia. Wherever an ammonia recovery plant is worked in connection with blast furnaces, therefore, it is advisable to select ores which contain a minimum quantity of combined water and take up a minimum quantity of hygroscopic water.

Attempts have been made to recover cyanogen from blast furnaces as a by-product on a commercial scale. Experiments have been carried out at the Clyde Iron Works to find a suitable method of accomplishing this. In the first experiment a tuyère was removed and replaced by a 4-in. pipe, bent at right angles and dipping into water contained in a 40-gal. barrel. On allowing gas to pass for several hours the liquor rose steadily in specific gravity and in the end was found to contain 73 gr. of potassium cyanide per gallon, the temperature never being above 85° F.

In a second experiment the furnace was tapped about 8 in. above the tuyères, and the barrel was charged with water containing ferrous carbonate in suspension. On bringing the cyanide-charged gas into contact with this solution ferrocyanide of potassium was formed, which remained dissolved in the water. This solution was then filtered from slag, dust, etc., and evaporated to dryness, leaving a dirty white grayish mass of dehydrated potassium ferrocyanide. This was broken up and melted in an iron crucible, where decomposition took place with a formation of iron, cyanogen, and potassium cyanide. The last contained 30 to 40% potassium cyanide and 60 to 70% potassium carbonate.

Experiments on the recovery of cyanide on a practical scale, conducted by R. Addie of Uddingston, were abandoned, owing to the drop in the price of cyanide and the inability to compete with a concern which was producing it at 10d. per lb. According to Mr. Addie the gases 1 ft. above the tuyères contained an average of 34 lb. of cyanide per 135,000 cu. ft. (0.04035 g. in 10 liters), the quantity decreasing the higher one goes up the bosh of the furnace, owing to the presence of carbonic acid which destroys the cyanogen when formed. At 11 ft. there was an average of only 2 lb. cyanide per 135,000 cu. ft. of gas (0.002373 g. in 10 liters). The method of recovering the cyanide was to draw off the gases in the neighborhood of the tuyères, or higher up the furnace, or by means of a hood over the slag tuyères. The gases were then passed through cooling tubes and finally through a washer. The fume in the tubes contained usually from 30 to 48% potassium cyanide. Interesting as these experiments are, at the present time it is probable that the recovery of potassium cyanide from blast-furnace gases has very little bearing on the economic use of coal, owing to the cost of collecting and refining the crude product obtained.

THE IRON MARKETS IN 1897.

THE year 1897 was one of large output and of increasing consumption, but of low prices and free competition. Last year we chronicled the ending of the steel billet and the nail pools and the consequent fall in prices. In February, 1897, came the break-up of the steel-rail pool, which through 1896 had maintained the price of standard steel rails at $28 per ton at mill for home consumption, though orders for export were taken at lower prices. In December, 1896, a meeting of the pool was held, at which prices for 1897 were fixed at $25 per ton at mill. Very few orders were placed at $25; in February the combination was dissolved and the price at once fell to $20, $18, $17, and some orders were reported as low as $15 per ton at mill. A large number of contracts were placed at the lower rates, so that a heavy business was insured to the mills for nearly the entire year. Large orders for export were placed at the same time, and foreign shipments have since been a feature of the market. The home demand for rails has been chiefly for renewals, since the new railroad construction reached a total of less than 2000 miles, as in 1896 and 1895. Later in the year the price of rails stiffened a little and quotations varied from $18 to $20 per ton at mill, few orders being taken below $18. The price of Bessemer pig, which in Pittsburg opened at $10.50, received only a temporary stimulus, and in May fell to $9.50 per ton. The improvement was gradual, and in September it again reached $10. It closed at $10.50—very nearly the opening price.

Steel billets were weak during the year, selling at lower prices than had ever been recorded before. During the greater part of 1896 the quotations were maintained at $20.25 per ton at mill by the combination, and when that broke up the reaction cut prices to $15.75 or $16 in Pittsburg. The price fell until in July sales were made at $14.25 at mill, and on large orders even a fraction below $14. In September the prices recovered to $16.65 per ton at mill; in October to $17, when considerable speculative holdings were thrown upon the market and the price again broke, and in November and December sales were made at $15.25 to $15.50.

No. 2 Western foundry opened at $11.25 per ton in Pittsburg; from May to September it sold generally below $10, reaching its lowest at $9.45 in September. From then on there was a gradual increase, and closing quotations were $10 to $10.25.

In the Eastern markets Southern iron continued during the year to be a controlling factor in prices. Upon the whole the quotations were steadier than in 1896. There were sales of considerable blocks of gray forge and No. 4 foundry made as low as $5.75, but the average realized by the Alabama furnaces was slightly above that of 1896.

The entire range of finished products in iron and steel showed low prices for the greater part of the year. They were best maintained in structural material. The market was singularly free from pools and combinations. In the latter part of the year reports of the formation of trusts were common, and as the year closed arrangements were nearly completed for the organization of a combination of the wire interests, including the mills making wire rods. The negotiations advanced so far that a company was organized to purchase and operate all the plants, and experts were employed to appraise the different mills. After the appraisement was completed, early in 1898, dissensions arose and several of the large Eastern plants withdrew. The Western plants thereupon formed a combination of their own. They make chiefly fence wire, nail wire, and the coarser wire products; all the mills making fine and special wires are outside of the new trust. Toward the close of the year new electric-railroad construction and other electric work became an important factor in the trade.

The speculative element was not prominent during 1897; it had some effect on Bessemer pig, but affected foundry irons only in a slight degree. One large purchase of Alabama iron, 100,000 tons at an average price of $6 per ton, was made early in the year; it was marketed later, so quietly and gradually as not to disturb the trade.

Exports.—During 1897 the exports of iron and steel from the United States continued to be a feature in the trade and showed continued progress. Although the actual amount is still moderate when compared with the trade of Great Britain, or even of Germany, its growth has been sufficiently great to excite the apprehension of those countries, and promises to be still greater in the future. The accompanying table shows the imports and exports of iron and steel for three years. But these statements do not wholly measure the growth of our export trade, since many important contracts, notably for steel rails, have been taken for future delivery, and the actual results will be apparent in 1898. The total value of exports of iron and steel and their products, including machinery, was $62,737,697 in 1897, against $48,670,218 in 1896, an increase of 28.9%.

IMPORTS AND EXPORTS OF IRON AND STEEL. (IN LONG TONS.)

Articles.	Imports.			Exports.		
	1895.	1896.	1897.	1895.	1896.	1897.
Pig iron	53,232	56,272	19,212	26,164	61,071	262,686
Scrap iron and steel	6,066	8,250	1,549	....	....	....
Bar iron	20,049	16,276	13,995	3,329	3,505	4,493
Rails	1,447	7,796	415	15,597	76,131	148,221
Cotton ties	3,485	7,157	105	....	....	....
Hoop and band iron	15	26	29	198	268	1,423
Steel ingots, billets, etc	26,255	20,856	17,232	3,148	8,855	6,356
Iron and steel plates and sheets	14,531	6,786	2,613	1,235	2,620	9,119
Tin plates	219,545	119.171	83,797	....	....	....
Wire rods	26.834	18,977	16.415	....	....	....
Wire and wire rope	5.773	6,775	2,558	29,674	38,043	58,075
Nails and spikes	....	....	....	10,228	14,854	24,086
Miscellaneous	978	759	551	....	....	....
Car wheels, number	....	....	....	14,106	15,842	21,973

Alabama.—Mr. William M. Brewer writes that in 1896 the sale of Southern pig iron reached the highest mark ever attained in Alabama. In January, 1897, trade was very quiet. The chief feature of interest was the fact that more than one-half of the iron sold was for export trade. There was a further shrinkage of business in February.

During March a heavy buying movement set in, but the sales were made at an average of 50c. per ton lower than in February. No. 2 foundry iron, which was sold in January for $7 per ton, was quoted at only $6.50 in March. The demand was so heavy during that month that the product of nearly two months was sold; about one-seventh was for export trade. In May buying was light; during June, however, there were heavy sales, and prices stiffened to $6.75 for No. 2 foundry. During July the market was quiet, the prices were maintained, and one-third of the iron sold was for export. In June a shrinkage of stocks commenced, which continued to the end of the year, 1897 closing with the smallest stock carried by the makers in the South for the past five years.

During the month of August the iron market changed from a depressed condition to one of activity. During September there was a continuation of the active buying in August. The demand was both from consumers and speculators, and prices advanced first to $7 for No. 2 foundry, then to $7.25 per ton. At the end of the month $7.50 per ton was asked. During the balance of the year the market was quieter, but during December there was more inquiry for Southern iron. The makers' prices in the district were very firm until the middle of December, when a concession of 25c. a ton was made by some and a good deal of iron was sold at that figure, a fair proportion of it for export.

Chicago.—Our special correspondent says that the Chicago iron market in the opening month of the year was listless, but from February on it took a different turn, and business began to enlarge. The combined tonnage of all sales from then to the close of the year was enormous. The great feature was the decrease in prices. Pig iron, bar iron, rails, billets, rods, structural material, plates, sheets and scrap all brought lower prices at the close of 1897 than the close of 1896.

In pig iron the year opened with a limited trade, and this prevailed until the middle of May, when the market began to improve; and sales at the close of May and in the opening weeks of June amounted to a large total. In June and up to the end of October consumers purchased large lots of pig iron, some of the contracts placed being from 20,000 to 40,000 tons. From the end of October to the end of the year the buying quieted down. Pig-iron prices closed the year lower than the opening prices; local coke foundry No. 2, for instance, having been quoted on January 7, 1897, at $11.25 to $11.75, while it closed the year at $10.50 to $11.

RANGE OF IRON PRICES IN CHICAGO DURING 1897.

Month.	Pig Iron.			Bars.	Beams.
	Lake Superior Charcoal.	Northern No. 2 Foundry.	Southern No. 2 Foundry.		
January	$13.50@14.00	$11.25@11.75	$11.40@11.65	1.25@1.35c.	1.73@1.80c.
February	13.50@14.00	11.25@11.75	11.00@11.20	1.25@1.30c.	1.73@1.80c.
March	13.50@14.00	11.00@11.50	10.65@11.15	1.25@1.30c.	1.75@1.80c.
April	13.50@14.00	10.75@11.25	10.25@10.40	1.15c.	1.75@1.80c.
May	13.50@14.00	10.75@11.25	10.25@10.40	1.05@1.10c.	1.70c.
June	13.00@13.25	10.25@10.50	9.75@10.00	1.00@1.10c.	1.15@1.20c.
July	13.00@13.25	10.25@10.50	9.75@10.00	1.00@1.10c.	1.15@1.20c.
August	13.00@13.25	10.25@10.50	9.85@10.10	1.10@1.20c.	1.15@1.20c.
September	13.00@13.25	10.25@10.75	10.00@10.25	1.10@1.15c.	1.15@1.20c.
October	13.00@13.25	10.50@11.00	10.50@10.75	1.10@1.20c.	1.20@1.25c.
November	12.50@13.00	11.00	10.60@10.85	1.15@1.20c.	1.30@1.45c.
December	12.50@13.00	10.75@11.00	10.60@10.85	1.10@1.15c.	1.30@1.45c.
Average	$12.50@14.00	$10.25@11.75	$10.00@11.65	1.00@1.25c.	1.15@1.80c.

The fall in prices of steel rails in February caused an enormous amount of business to be placed with the local mills. From $26 per ton prices dropped in a couple of weeks to even as low as $15; it was said that business was booked in Chicago at the latter figure. The lighter rails were in fair demand throughout the entire year. In March prices began to improve, and the closing quotations were $19@$20.50, Chicago delivery.

Billets and rods were in poor demand in the opening weeks of the year, but gradually there arose much better buying, and the local mills had their hands full of work. In January billets were quoted $17.50 to $18, and in December $17. Rods were quoted in January at $24 to $25, and in December at $24.50.

Bar iron was lifeless for a few months, but business picked up in June, when the implement makers and car builders began to buy, and trade from June on to the end of the year was brisk. Bar iron opened the year with a price of 1.25 to 1.35c., and closed 1.10 to 1.15c.

Business in structural material was fair, no especial boom having taken place. There were but few large office buildings built in the West. Bridge material was in very good demand, and a large tonnage was placed. Prices on structural material decreased. In January beams were quoted 1.70 to 1.80c., and in December they had fallen to 1.30 to 1.45c.

Cleveland.—Our special correspondent writes that the Cleveland iron-ore market during 1897 was active; a larger volume of business was transacted during 1897 than in any previous year, and two new records were established—for ore shipments from the Upper Lake regions, and for shipments toward the furnaces. Ore brought about 30% less money in 1897 than in 1896. After the dissolution of the Bessemer Ore Association, which had maintained the prices fixed in 1896, the Old-Range producers formed an association, including the Marquette, Menominee, Gogebic, and Vermilion ranges, and made a base price of $2.65 for Norrie, carrying 63% iron, 0.045% phosphorus, and 10% moisture. This price was much lower than that which prevailed during 1896, and some of the producers declared at once that they could not afford to operate their mines at the prices fixed, but preferred to wait until the close of the season and then take out ore and take chances on the prices to be fixed for 1898. In June, however, it became apparent that a large demand was coming, and shippers began to strain every nerve in bringing down ore, with the satisfactory result that over 12,000,000 tons were moved to Lake Erie ports and to Chicago, almost 2,000,000 more than were shipped by water in 1895—the former record year.

Lake Erie ports received 10,120,906 tons, only 2,094,739 tons having been shipped elsewhere. The receipts for 1896 were 8,026,432 tons, and 8,112,228 tons in 1895. On December 1, 1897, there were 5,923,755 tons on the Lake Erie docks, against 3,256,497 tons on May 1, when the season opened. These figures show shipments to furnaces since May 1 of 7,453,648 tons, against 5,021,146 tons for the same period in 1896 and 6,339,496 tons in 1895. The receipts at the Cleveland port alone were 2,456,704 tons, against 2,313,170 tons for 1896 and 2,312,370 tons for 1895. Cleveland has been compelled to surrender the lead in ore receipts to Ashtabula, at which port 3,001,914 tons were received, against

2,272,822 tons for 1896 and 2,474,791 tons in 1895. The movement of Lake Superior ore is shown in the accompanying tables:

SHIPMENTS OF LAKE SUPERIOR IRON ORE BY PORTS FOR FIVE YEARS.

Year.	Marquette.	Escanaba.	Gladstone.	Ashland.	Two Harbors.	Duluth and Superior.	Total.		Totals.
							Lake.	Rail.	
1893	1,086,934	2,048,981	203,585	1,117,524	903,329	520,565	5,880,918	178,037	6,058,955
1894	1,424,409	1,657,240	79,109	1,781,708	1,873,344	1,367,286	7,633,091	115,841	7,748,932
1895	1,079,485	2,860,172	109,211	2,850,219	2,119,156	1,716,667	10,234,910	194,127	10,429,037
1896	1,564,818	2,221,981	220,887	1,566,286	1,818,992	2,156,179	9,644,036	290,410	9,934,446
1897	1,945,519	2,302,121	341,014	2,067,637	2,651,465	2,907,889	12,215,645	253,993	12,469,638

SHIPMENTS OF LAKE SUPERIOR IRON ORE BY RANGES FOR FIVE YEARS.

Yèar.	Marquette.	Menominee	Gogebic.	Vermilion.	Mesabi.	Totals.
1893	1,829,053	1,466,197	1,329,464	820,621	613,620	6,058,955
1894	2,058,683	1,139,273	1,810,290	948,514	1,792,172	7,748,932
1895	2,097,888	1,923,798	2,547,976	1,077,838	2,781,587	10,429,037
1896	2,603,839	1,560,467	1,799,971	1,068,090	2,882,079	9,934,446
1897	2,715,085	1,937,018	2,258,236	1,278,481	4,280,873	12,469,638
Totals from opening of mines...	49,258,222	24,931,441	23,047,028	10,498,716	12,355,456	120,088,178

IRON ORE RECEIPTS AND STOCKS AT LAKE ERIE PORTS.

Ports.	Receipts at Ports.			Stocks on Docks Dec. 1.		
	1895.	1896.	1897.	1895.	1896.	1897.
Toledo	260,730	301,794	416,438	113,132	151,959	194,644
Sandusky	12,861	58,667	79,792	84,875	59,491	84,786
Huron	146,442	226,515	198,231	101,000	200,075	230,029
Lorain	214,219	191,445	355,188	224,264	231,288	317,509
Cleveland	2,812,370	2,313,170	2,456,704	1,200,792	1,419,811	1,478,355
Fairport	914,617	941,446	1,008,340	605,470	773,905	825,312
Ashtabula	2,474,791	2,272,822	3,001,914	1,301,302	1,441,666	1,885,694
Conneaut	244,967	327,628	495,327	292,480	275,800	360,895
Erie	811,989	847,849	1,311,526	335,718	355,222	484,871
Buffalo	719,742	545,101	797,446	207,199	82,267	111,660
Totals	8,112,228	8,036,432	10,120,906	4,415,712	4,954,984	5,923,755

At the close of the season the prices of ore fluctuated somewhat, notwithstanding the base fixed at the beginning of the season, the result of the heavy movement toward the furnaces; and the demand for non-Bessemers was good. For all practical purposes, however, the prices fixed by the Association of Old-Range Producers were maintained.

The 6000-ton ships which were put in commission in 1897 for carrying ores had an effect on the freight business disastrous to the owners of smaller and older vessels. The regular rates on ore were the lowest ever recorded, though improved rates at the close of the season helped to increase the average. Many vessel-owners made no attempt whatever to compete with the large steel carriers. The vessel men who had contracts at 79c. a ton for moving ore to the Lake Erie ports were few. At the beginning of the season 50@55c. was the rate for Escanaba contracts, but the vessel-owners soon accepted 45c. The average rates of freight during the season of 1897 were: Iron ore, Escanaba to Ohio ports, 45.3c.; head of Lake Superior to Ohio ports, 57.2c.; Marquette to Ohio ports, 54 6c. The average rate during the ten years ending with 1897 was : Escanaba to Ohio ports, 72.5c.; head of Lake Superior to Ohio ports, $1.02; Marquette to Ohio ports, 90c.

In pig iron a much larger volume of business was done. At the beginning of the year 1897 the highest quotation was $11.40, and the lowest $10.50. In December, 1897, the highest quotation was $10.50, showing a shrinkage in price of only 90c. per ton. Until May 1 the price was steady, but when the first ore was brought down the price fell, and did not recover till September. A heavy business was transacted.

PRICES OF BESSEMER PIG IRON AT CLEVELAND DURING 1897.

Month.	Highest.	Lowest.	Average.	Month.	Highest.	Lowest.	Average.
January..........	$11.40	$10.50	$10.75	July.............	$9.75	$9.65	$9.71
February	10.90	10.65	10.73	August....... ...	10.15	9.65	9.87
March	10.90	10.40	10.65	September.......	10.90	9.90	10.86
April....	10.40	9.75	10.18	October...	10.75	10.50	10.63
May	9.75	9.25	9.60	November.......	10.50	10.25	10 31
June.............	9.90	9.25	9.64	December	10.50	10.15	10.33

New York.—New York is not a center of production in the iron trade, but simply an agency market, which supplies the foundries and shops located near by and in a rather limited territory. It is not a large export market, for many of the great furnaces, foundries, and mills have foreign agents, through whom all business is done. New York prices are simply the prices at the centers of production, plus freight rates. The opening of the year was dull and lifeless, until the breakdown of the rail pool caused a flurry in rails, when many orders were placed. During the spring there was a rather stronger demand for structural material, several large contracts for cast-iron pipe were placed, and the Metropolitan Traction Co. placed contracts for rails and fastenings for about 20 miles of track. In general, however, the local market remained quiet. The early summer was characterized by fluctuating prices. Later trade rather fell off, and there was more cutting. About the middle of August a general advance set in, large sales of pig iron were made, several good-sized contracts for bridge material were placed, and there was a decided increase in the exports. This advance grew stronger up to the middle of October, when a reaction set in, and the volume of trade fell off very decidedly. Prices settled, and up to the middle of December things were pretty quiet. In certain lines, however, the last two weeks of the year showed a decided improvement.

Dealings in wrought-iron pipe were marked by a cutting of prices that left no profit in the business. Business in the local market was chiefly in structural iron and steel; the amount of these materials consumed during the past year in and about the city was fully 30% in excess of that used during 1896.

Philadelphia.—Our special correspondent supplies the following table giving the range of prices of iron and steel in Philadelphia during 1897:

IRON PRICES AT PHILADELPHIA, 1897.

Kind of Iron.	January 1.	April 1.	July 1.	October 1.	December 31.
Pig Iron:					
No. 1 foundry	$12.75@13.25	$12.25@12.75	$11.75@12.50	$12.00@12 50	$12.00@12.25
No. 2 foundry	12.00@12.50	11.25@11.75	10.75@11.25	10.25	11.25@11.50
Standard forge	11.25@11.50	10.50@10.75	10.25@10.50	10.50	10.50
Ordinary forge	10.75@11.00	11.00@11.25	9.75@10.25	10.25	10.00@10.25
Billets	17.50@18.50	17.25	16.50	19.00	17.25
Merchant bars	1.15c.	1.15c.	1.10c.	1.15c.	1.10c.
Plates	1.30c.	1.20c.	1.15c.	1.20c.	1.15c.
Shell	1.40c.	1.30c.	1.25c.	1.25c.	1.20c.
Flange	1.50c.	1.40c.	1.50c.	1.50c.	1.50c.
Fire-box	1.70c.	1.60c.	1.50c.	1.50c.	1.50c.
Angle	1.25c.	1.20c.	1.15c.	1.20c.	1.10c.
Beam and channel	1.70c.	1.70c.	1.25c.	1.25c.	1.10c.
Old iron rails	$14.00	$12.00	$11.50	$13.00@14.00	$12.50
Railroad scrap	12.75	12.25	11.50	12.50	12.50
Heavy steel scrap	12.25@12.75	10.50@11.00	10.00	10.75	10.50

The year 1897 opened unsatisfactorily; manufacturers and buyers were discouraged and at a loss what to do. The winter months passed without much to disturb the trade. Even when spring came there was uncertainty and hesitancy. The pressure for iron did not admit of higher prices; so far as pig iron was concerned there was a drop. As the spring wore on into summer there was no improvement in volume of business or prices, except in steel products. By midsummer evidences of better conditions were visible. If production had not grown so fast firmer prices might have been realized, but demand lagged behind and prices remained weak.

Billets did not vary except in the fall. Quotations opened in January at $17.50 and fell a dollar, went up, but soon fell back again.

Merchant bars sold at less than quoted rates all the year. The firm markets in the fall months did nothing to advance prices because of the sharp bidding for work by mills. Pipe and tube work was irregular, particularly pipes. The competition from outside sources crowded quotations very low.

The most interesting feature in the trade was the demand for plates and shapes. Prices for these products declined steadily from the opening of the year. With the sharp improvement in the early autumn the struggle for the new business sent prices down rather than upward, and though the volume of business has ever since been on the increase, buyers were able to get their material at declining prices.

During the autumn months large transactions took place in old iron rails, prices being forced up some $2 per ton, on paper at least. In December they had declined to summer prices. Scrap took the same course, advancing for a few weeks and then declining.

Pittsburg.—Our special correspondent writes that at Pittsburg in 1897 sales increased more than 1,000,000 tons over 1896. Production and consumption were very large; all the plants in this section at the close of the year were running full.

The monthly range of steel-billet prices was as follows: January opened $15.80, closed $16.25; February opened $15.50, closed $16; March opened $15, closed $15.80; April opened $15.35, closed $14.75; May opened $14.50@$14.75, closed $13.90@$14.60; June opened $15, closed $14.60; July opened $14.60, closed $14.25@$14.50; August opened $14.60, closed $15; September opened $14.40, closed $16.65; October opened $16.25, closed $16.50@$17; November opened $16.35, closed $15.40@$15.65; December closed $15.50.

The year's prices for all kinds of products were irregular and uncertain. The transactions in Bessemer were very extensive. The following are the monthly prices of Bessemer in Pittsburg in 1897: January opened $10.50, closed $10.60; February opened $10.40, closed $10.90; March opened $10.90, closed $10.60; April opened $10.20@$10.40, closed $9.65@$$9.70; May opened $9.50@$9.70, closed $9.85; June opened $9.60, closed $10; July opened $9.50, closed $9.85; August opened $9.60, closed $9.80; September opened $10, closed $10.10; October opened $10.75, closed $10.65; November opened $10.40, closed $10.60; December closed $10.60.

The monthly range for mill iron or gray forge was as follows: January opened $9.75@$10, closed $9.50@$9.75; February opened $9.65@$9.75, closed $9.75@$9.85; March opened $9.50@$9.60, closed $9.25@$9.35; April opened $9.10@$9.25, closed $8.75@$9; May opened $8.75@$8.90, closed $8.85@$8.90; June opened $8.50@$8.75, closed $8.40@$8.50; July opened $8.75@$8.80, closed $8.80@$8.90; August opened $8.70@$8.80, closed $8.60@$8.75; September opened $8.40@$8.75, closed $9.45@$9.50; October opened $9.75@$10, closed $9.80; November opened $9.75, closed $9.50; December closed $9.50.

The following table shows the sales of Bessemer pig, of mill iron, of steel billets, and the total sales of all kinds of iron and steel at Pittsburg in 1897:

Time.	Mill Iron.	Bessemer Pig.	Steel Billets.	Total Sales.
First six months	88,209	794,700	324,670	1,524,566
Second six months	125,670	791 700	302,500	1,644,279
Year	213,879	1,586,400	627,170	3,168,845

In Bessemer pig the heaviest sales were 95,300 tons in the week ending August 18; June 12 came next, with 79,500 tons, and then February 20, with 72,750 tons. The lightest sales were 6500 tons for the week ending July 17. Sales of billets ranged between 29,000 tons in the week ending February 27, and 4200 tons July 10. Mill iron varied from 1000 tons May 22 to 24,350 tons September 18. The biggest total sales were 162,095 tons for the week ending September 18, next in order being 139,700 tons September 25, and 117,620 tons June 12; the lightest record was 21,610 tons July 10.

The following table shows sales and prices of iron ore in Pittsburg for five years; the prices are on dock at Lake Erie ports:

1897	3,375,000	tons Bessemer	$2.40@$2.65
1896	3,300,000	" "	3.75@$4.10
1895	4,300,000	" "	2.90@$3.75
1894	2,950,000	" "	2.25@$3.25
1893	4,010,000	" "	2.75@$3.00

The event of the year in the iron-ore traffic of Pittsburg was the completion of the Pittsburg, Bessemer & Lake Erie Railroad—the Carnegie road—which is expected to reduce ore rates to the furnaces. This road was built and equipped especially for the carriage of iron ore and coal.

LEAD.

THE total production of lead in the United States in 1897, including that which was derived from foreign ore and bullion, was 289,835 short tons, against 254,851 short tons in 1896. This production was distributed as follows, the corresponding figures for 1896 being given in brackets: Desilverized domestic lead, 144,649 short tons (135,332 short tons); soft lead, 45,710 short tons (33,428 short tons); antimonial lead, 7359 short tons (5932 short tons); total domestic, 197,718 short tons (174,692 short tons); foreign, 92,117 short tons (80,159 short tons). It appears, therefore, that the increase in production last year was generally distributed among the sources of domestic supply, though the increase was proportionately greater in the case of soft lead than with any of the other classes. The production of soft lead is derived entirely from Missouri and Kansas, chiefly from the southeastern corner of the former State. These mines possess large bodies of low-grade ore, which can be dressed and smelted very cheaply, and there is, consequently, a regular tendency towards increase in output from this district, especially when the price of lead is favorable, as it was throughout 1897. The figures which we report as the production of soft lead do not now represent the production of Missouri and Kansas, as they formerly did, since, during late years, the smelters of argentiferous ores have been drawing considerable supplies from the Joplin district, which have been smelted with silver-bearing ores, and the lead being subsequently desilverized is, of course, reported under that classification. Ore from the Joplin district has even been carried so far west as Colorado, at times when certain smelters of that State were short in their lead supply.

The increase in the production of desilverized lead, both foreign and domestic, is attributable to the high price of lead which ruled during the summer, when, notwithstanding the drop of 10c. per ounce in the value of silver, the higher price realized for their lead contents made such ores as those of the Bingham District in Utah and the Cœur d'Alêne in Idaho net more per ton than they had done previously. Moreover, mining operations were carried on generally in the Rocky Mountains with great activity in 1897, so that, although there were no important new discoveries of silver-lead ores, there was a natural increase in production.

The sources of domestic lead supply continued the same in 1897 as in the previous year, that is to say, by far the greater part came from the Cœur d'Alêne in Idaho, Bingham Canyon in Utah, and from Leadville in Colorado. The mines of Castle, Barker, Neihart, and Glendale in Montana were also large producers.

The silver-lead smelting industry in the United States in 1897 was carried on chiefly, as heretofore, at Denver, Pueblo, and Leadville in Colorado, and Salt Lake City in Utah. At Denver there were two works in operation, at Pueblo three, at Leadville one, and at Salt Lake City three. The two large works in Montana ran chiefly on ore from that State and Idaho, while the two works in Washington drew large supplies from British Columbia. A new plant was put in operation at Crittenden, Ariz., to smelt ores mined in that vicinity, and the construction of works at Cerrillos, N. M,, was commenced. A new plant of small capacity was run for a short time at Twin Bridges, Mont., and one of the furnaces of the Hecla Works at Glendale, which had been idle for some time, was put again in operation. The old works of the St. Louis Smelting and Refining Co. at St. Louis, Mo., which had been idle for a long time, were again put in blast to smelt ores from Southeastern Missouri and the Joplin district.

PRODUCTION AND CONSUMPTION OF LEAD IN THE UNITED STATES. (IN SHORT TONS.)

Year.	Stock of Refined, Jan. 1.	Produced from United States Ores.				Imported in Ores and Bullion.	Total Supply.	Consumed.	Exported in all Forms.	Stock of Refined, Dec. 31.
		Desilverized.	Soft.	(*b*) Antimonial.	Totals.					
1893.....	5,500	130,026	31,369	5,288	166,678	64,270	236,448	195,457	35,000	5,991
1894.....	5,991	119,486	37,044	4,837	160,867	69,741	236,599	191,146	40,000	5,458
1895.....	(*a*) 12,634	119,057	32,797	5,000	156,854	100,471	269,959	232,854	18,130	(*a*) 18,975
1896.....	(*a*) 18,975	135,382	33,428	5,992	174,692	80,159	273,826	203,819	56,983	(*a*) 13,024
1897.....	(*a*) 13,024	144,649	45,710	7,359	197,718	92,117	302,859	211,345	60,353	(*a*) 31,161

(*a*) Includes lead in bond, which amounted to 6694 tons at the end of 1897, 4124 tons at the end of 1896, and 9865 tons at the end of 1895. (*b*) The entire production of antimonial lead is entered as of domestic production, although part of it is of foreign origin; it is, however, impossible to separate this in the statistics; owing to this inability the total American production may be over-stated by about 2000 tons and the foreign production correspondingly under-stated.

PRODUCTION OF WHITE LEAD IN THE UNITED STATES. (*a*)

Year.	Quantity.		Value.		Year.	Quantity.		Value.	
	Short Tons.	Metric Tons.	Totals.	Per Short Ton.		Short Tons.	Metric Tons.	Totals.	Per Short Ton.
1894..........	87,242	78,155	$8,445,174	$108.00	1896..........	95,955	87,049	$7,868,310	$81.95
1895..........	95,389	86,537	9,061,965	95.00	1897..........	103,235	93,654	9,291,150	90.00

(*a*) Nearly all the production of white lead entered in the above table is made by the corrosion of pig lead. A small amount is made at Joplin, Mo., and at Canyon City, Colo., by direct volatilization of ore.

The foreign lead was imported almost entirely from British Columbia and Mexico, chiefly from the latter country. A large part of this was in the form of ore and bullion, which was smelted in bond, the desilverized lead being exported. This work had been carried on for many years by the refiners of the Atlantic seaboard, but in 1897 certain refiners of Denver entered the same field, smelting in bond ores imported from British Columbia, and shipping the lead to Liverpool by way of Galveston. The lead production of British Columbia increased through the general activity of mining in that section, amounting to 19,421 tons. The production of Mexico was 78,966 short tons, which is an increase over 1896. All of the Mexican lead is brought into the United States, either in the form of ore or bullion, with the exception of a small amount which goes to Hamburg for desilverizing and refining.

As in previous years, a large amount of lead ore and bullion was refined and smelted in the United States in bond. Owing to a difference between the tariff act of July, 1897, and the act of 1894, the Secretary of the Treasury deemed it advisable to require the rebonding of works engaged in this business. Under the old law it was provided that each day a quantity of refined metal equal to the amount of imported metal smelted or refined that day should be set apart, and should not be removed from the works except for transportation to other bonded premises or for exportation. Under the new law only 90% of the amount imported has to be thus set aside. According to the new law the refined metal obtained from imported ores must be exported or entered for consumption within six months from the date of the receipt of the ore.

Arizona.—The Columbia Smelting Co., originally organized as the Empire Smelting Co., completed a 100-ton furnace at Rollin, near Crittenden, Yuma County, and blew in about the middle of August. This company obtains ore from the Hard Shell and Flux mines in the neighborhood of the works, while the coke and iron flux are brought from New Mexico.

Colorado.—The production of lead in this State in 1897 was 42,500 short tons, against 54,705 in the previous year. The falling off is attributable chiefly to the decreased output of the mines of Leadville and partly to the closing in other parts of the State of silver mines containing a little lead in their ore which, after the fall in the value of silver, could no longer be worked profitably. The great deposits of silver-lead ore at Leadville are now practically exhausted, and the Arkansas Valley Smelting Co., at present the only concern with lead furnaces in blast at Leadville, was obliged last year to buy Cœur d'Alêne lead. The old mines of Fryer, Carbonate, Iron, and Rock Hills, which were formerly the chief sources of lead ore, are for the most part abandoned to lessees. The latter make a considerable production by working around the old stopes, and occasionally come across a new pocket of ore, but no important discovery is to be expected since the ground has been so thoroughly explored. Of the comparatively new sections of the camp, the Downtown was idle in 1897 owing to difficulties in connection with pumping the immense amount of water encountered there, while the ore of the Breece Hill mines does not contain much lead. The miners of the district have been helped considerably by concessions from the railways with respect to freight rates to the valley. Early in October the freight rate on high-grade ore was reduced from $4.45 per ton to $3, and that on iron ore from $3 to $2 per ton. Later a reduction of from $1.50 to $3 per ton in the rates on ore from outside districts to Leadville was made. (Refer also to the review of gold and silver mining elsewhere in this volume.)

There were seven lead-smelting works in operation in the State during the year, namely, two at Denver, three at Pueblo and one at Durango. Two of these desilverize their lead and refine the bullion, although the plant of the Pueblo Smelting and Refining Co. made no output in 1897, being closed for remodeling. The Globe Smelting and Refining Co., of Denver, added an electrolytic parting plant to its refinery. The other smelters of the State shipped their silver-lead to Omaha, Kansas City, etc.

The rates established by Colorado smelters for the purchase of ores at the end of 1897 were as follows:

Gilpin and Clear Creek counties: In dry and copper ores gold is paid for at the rate of $19.50 per oz. when the ore contains more than 0.05 oz.; for silver, 95% of the New York quotation of the day of settlement; copper is paid for at $1 per unit, dry assay. A charge of $7.50 is deducted for treatment. This rate is made on a basis of 40% silica. For each unit in excess 10c. per ton is added, up to a maximum of $9.50 for ores not exceeding $25 per ton gross value, and $11 for ores exceeding $25. An allowance of 5c. per unit is made for a tenor in silica less than 40%. An extra charge of 30c. per unit is made for zinc in excess of 5%.

In lead ores the gold and silver are paid for at the same rate as in dry and copper ores. Lead is paid for on the basis of $4 per 100 lb., i.e.: For ores with 5 to 10% lead, 40c. per unit, less $11 treatment charge; 10 to 15%, 40c. per unit, less $9.50; 15 to 20%, 40c. per unit, less $7.50; 20 to 25%, 40c. per unit, less $5.50; 25 to 30%, 45c. per unit, less $5; 30 to 35%, 45c. per unit, less $3.50; 35 to 40%, 45c. per unit, less $2; 40 to 45%, 47c. less $1; 45 to 50%, 50c. less $1; over 50%, 55c. less $1. An extra charge of 50c. is made for each unit of zinc in excess of 10.

In tailings and concentrates lead is paid for at 40c. per unit on a $4 basis if the ore contains 5% or more. Excess of silica over 10% is charged at 10c. per unit, and excess of zinc over 5% at 30c. per unit. Gold is paid for at the rate of $19 per oz. when the ore contains more than 0.05 oz.; silver at 95% of current New York quotation. The charge for treatment is $3.50 per ton in car-load lots.

The above rates are made only for car-load lots, Denver delivery.

Aspen Ores.—Silver is paid for at 95% of the New York quotation; lead at 55c. per unit on a $4 basis when the ore contains 3% or more. Treatment charge $4 per ton, delivery at Pueblo or Denver. For excess of silica over iron an extra charge of 10c. per unit is made; for excess of iron over silica an allowance of 10c.; for excess of lime over silica an allowance of 10c. An extra charge of 20c. for each per cent of sulphur and 30c. for each per cent of zinc in excess of 5% is added.

Leadville Ores.—The Leadville carbonate schedule is as follows: On all ores up to and including $8 in value, with less than 5% lead, no allowance for lead, $7.50 per ton for treatment; 5 to 10% lead, 35c. per unit, $7 treatment; 10 to 15% lead, 35c. per unit and $5 treatment; 15 to 20% lead, 40c. per unit and $3 treatment; 20 to 25% lead, 42c. per unit and $2 treatment; 25 to 30% lead, 43c. per unit and $1 treatment; 30 to 35% lead, 45c. per unit; 35 to 40% lead, 47c per unit; 40 to 45% lead, 50c. per unit; 45 to 50% lead, 52c. per unit; 50 to 55% lead, 55c. per unit. There is no charge for treatment on ore with more than 30% lead. Gold is paid for at $19 per oz. if the ore contains 0.05 or over; silver at 95% of New York quotation; lead on the basis of $4 per 100 lb. No charge is made for zinc or sulphur up to 5% of each, but when in excess of 5%, 50c. is charged for each per cent of excess of zinc and 25c. for each per cent of excess of sulphur.

On ores carrying more than $8 and up to $20 inclusive, all values, there is a reduction of 50c. per ton from the above schedule of treatment charges; on ores running over $20 and up to $35 inclusive, the schedule charge for treatment is made; on all ores carrying over $35 in value, $1 is added to the schedule charge for treatment. For all excess of iron over silica, there is an allowance of 15c. for each per cent of such excess; for all excess of silica over iron, a charge of 15c. for each per cent of such excess. Ores containing less than 5% lead and more than 30% iron are classed as iron ores. No allowance is made for the lead contained in oxidized iron ores.

Oxidized siliceous ores carrying under 5% lead and having a value of $12 and under, $7 treatment; $12 to $20 inclusive, $8 treatment; over $20, $9 treatment; 95% of New York quotation for silver; $19 per oz. for gold if the ore contains 0.05 oz. or over.

On siliceous lead ores containing 5% of lead and over, the rates for carbonate ores are charged until the treatment charge reaches the rates upon dry siliceous ores, after which the latter treatment charges are made.

Dry sulphide ores of the value of $12 and under, $9 treatment; over $12 to 30 oz. silver per ton inclusive, $10 treatment; 30 to 50 oz. inclusive, $10.50 treatment; over 50 oz., $11.50 treatment; copper by dry assay, $1 per unit; no extra charge is made for zinc up to 10%; 50c. is charged for each per cent in excess of 10% up to 15%, and 30c. for each per cent above 15%; 95% of the New York quotation for silver, and $19 per oz. for gold if the ore carries 0.05 oz. per ton or over.

All Leadville charges are based on Leadville delivery on cars.

Cripple Creek Ores.—The schedule for the process mills is as follows: For milling ores carrying 2 oz. per ton or under, $19 per oz. is paid for the gold and 95% of the New York quotation for silver. The charges are: For ore of ½ oz. or under, $8 per ton; ¾ to 1 oz. per ton, $9; 1 to 1¼ oz. per ton, $10; 1¼ to 1½ oz. per ton, $11; 1½ to 2 oz. per ton, $12.

On smelting ores carrying more than 2 oz. per ton in gold, $20 per oz. is paid for the gold and 95% of the New York quotation for silver if the ore contains 1 oz. or more per ton; treatment charge, $10 per ton, Denver or Pueblo delivery.

Idaho.—The production of lead in this State in 1897 was 58,250 tons, of which 55,750 tons was from the Cœur d'Alêne. The mines of the Wood River and other districts in the State are no longer important as lead producers. The output of the Cœur d'Alêne mines in 1897 included 3,450,000 oz. silver. In 1896 they produced 2,500,000 oz. silver with 37,250 tons of lead. The statistics of lead production in this State are based on direct returns from the mines to THE MINERAL INDUSTRY, with an allowance of 10% for loss in smelting. Almost all of the ore mined in the Cœur d'Alêne requires a preliminary dressing. The Consolidated Tiger and Poorman Co. produced 91,089 tons of ore which yielded 15,819 tons of concentrates, a ratio of 5.75:1, from March 1 to December 31, 1897. The receipts up to December 1 were $43[illegible],880, and the net profits $139,044. The resources of the mines already opened are large, and it is to this district that American smelters now have to look for their largest supply of lead.

Missouri.—The production of lead ore in Southwestern Missouri and Southeastern Kansas in 1897 was 29,578 tons, against 26,942 in the previous year. The lead ore of this district being obtained in connection with zinc ore, an increase in the output of one is accompanied by an increase in the output of the other. (Refer to article on zinc elsewhere in this volume.) The price of lead ore per 1000 lb. at Joplin, Mo., was as follows: January, $16.12; February, $17.06; March, $17.87; April, $18.25; May, $19.30; June, $21.125; July, $21.55; August, $23.25; September, $25.875; October, $28.61; November, $23.61; December, $24. The average for the year was $21.38, which was $5.32 more than in 1896. In October the price of lead ore at Joplin rose to $30 per 1000 lb. The lowest price of the year was $16, in January. The competition of the silver-lead smelters at Kansas City, St. Louis, and Chicago compelled the Galena-Empire Smelting Co. of Galena, Kas., and the Picher Lead Co. and the Case Lead Co. of Joplin to close down their works at the end of the summer, while for the same reason the new plant of the Serge Lead Co. was not blown in.

The production of lead ore in Missouri in the fiscal year ended June 30, 1897, was 67,404 short tons, of which 57.5 were from Greene County, 130 from Jefferson, 3400 from Madison, 48,931 from St. François, and 1155 from Washington. The remainder was from the Joplin district.

The production of lead in Southeastern Missouri in 1897 was 31,480 short tons, all of which was shipped to St. Louis. The National Lead Co. acquired 1200 acres of land at Farmington, in the Flat River district, St. François County, on which it immediately began prospecting, and is said already to have disclosed large bodies of ore. This company also took over the works of the St. Louis Smelting and Refining Co., which had been idle for four years, and put them into operation, smelting only Missouri lead ores. The Mine La Motte, at the place of the same name, was purchased from R. Hazard by S. P. Leathe, who intends to work it on a more extensive scale, it is said.

The lead ores of Southeastern Missouri are commonly smelted in circular water-jacketed blast-furnaces, 45 to 50 in. in diameter at the tuyères (of which there are five) and 10 to 16 ft. in height from the tuyères to the charging door. Furnaces of this type are used at Herculaneum (works of St. Joseph Lead Co.) and at Mine la Motte.

The ore raised from the mines, averaging from 7% lead (Bonne Terre) to 11% (Mine la Motte), is concentrated to about 70% lead in dressing works of large size and modern design. The concentrates are roasted in ordinary reverberatory furnaces, and smelted in shaft furnaces with the proper proportions of iron ore and limestone. The matte is roasted in kilns and added to the furnace charge. The production of a 45-in. furnace is about 18 tons of lead per day. The cost of smelting per ton of ore is as follows: Roasting ore, $2.60; roasting matte, $0.44; labor in smelting, $1.76; refining, $0.20; coke, $0.90; flux, $1.07; wood, $1.48; repairs and supplies, $1.18; total, $9.61. Assuming a loss of 10%, this is equivalent to $15.25 per ton of lead.* The lead is refined by remelting at a low heat

---

* J. D. Robertson, *Missouri Geological Survey*, Vol. VII., Lead and Zinc Deposits, Sec. II.

and poling, either by stirring with green wood or by means of a jet of steam passed through the molten metal.

The Desloge Consolidated Lead Co., at Desloge, uses reverberatory furnaces of the Tarnowitz type and of the same dimensions, except that the slope of the hearth has been made as in the Flintshire furnaces. The Desloge company smelts in one of these furnaces per 24 hours 10,000 lb. of galena concentrates, containing 70% lead, from which about 52 to 54% is extracted. The slag containing the remainder of the lead is smelted in blast-furnaces.

A small amount of lead is smelted in Southeastern Missouri in air furnaces. The smelting of a charge of 1500 lb. of dressed ore, which may yield 80% of the lead contents, is estimated to cost $4.85, *i.e.*, $6.27 per ton of ore or $7.83 per ton of lead.*

In Southwestern Missouri the smelting is commonly done in Scotch hearths of the American water-back type. At the works of the Granby Mining and Smelting Co., at Granby, a 28x24-in. hearth with lead well 14 in. deep smelts a charge of about 3.5 tons of ore in eight hours. The yield is about 2.5 tons of lead. The cost of smelting in a Scotch hearth is estimated at $7.88 per ton of ore or $9.80 per ton of lead.* The working of a charge of 3500 lb. of ore requires four men, whose wages come to $8, one cord of wood at $2, five bushels of charcoal costing $0.40, and 40 cents' worth of wood billets.

Montana.—There was considerable development in the Castle district in Meagher County, which is now connected with the Northern Pacific Railway by the Montana Northern Railway. The most important producers are the Cumberland, which is worked under lease by A. M. Holter & Co., the Yellowstone, the Great Eastern, and the Judge. The ore is a lead carbonate carrying silver and a little gold. The Hecla Company, at Glendale in Beaverhead County, made a small production of lead ore and had one of its furnaces in operation part of the year, but it is generally considered that these mines are now nearly exhausted.

Nevada.—A small amount of lead ore was produced at Eureka, this going to Salt Lake for smelting. A well-defined vein of galena, averaging 2 ft. in width and 73% lead, was reported to have been discovered in the Steptoe mine in the Shell Creek range, east of Ely.

New Mexico.—The lead production of this Territory in 1897 was derived chiefly from the Magdalena Mountains. The ore is galena and lead carbonate. The chief producers are the Graphic Mining and Smelting Co., which has works of 100 tons per day capacity at Magdalena, and the Kelly Mine, near Magdalena, which ships to the El Paso Smelting Works. Some new discoveries of lead carbonate ore were made in the lime-quartzite formation of the Hillsboro district. The Cerillos Smelting Co., erected an 80-ton smelting furnace at Cerillos in Sante Fé County. Additions were made to the works of the Silver City Smelting and Reduction Co., of Silver City.

Utah.—The production of the three smelters in this State in 1897 was 25,117 tons of silver-lead, of which all save about 400 tons was obtained from ore mined in Utah. The shipments of silver-lead from Salt Lake City in 1897 were 20,239

---

* Robertson, *op. cit.*

tons, against 21,697 tons in the previous year; the shipments of silver-lead ore were 49,863 tons, against 57,585 tons. The chief lead-producing district in Utah in 1897 was Bingham Canyon. Outside of this district the Silver King mine of Park City was a large producer. The production of lead in Utah increased in 1897 notwithstanding the decline in the value of silver and the increase in freight and smelting charges which compelled many of the mines in Park City and Tintic, whose ores contain a little lead, to suspend operations. In the case of the mines producing ore with a high percentage of lead, however, the rise in the value of that metal more than offset the loss through the decline in silver. Thus, the Silver King mine of Park City realized more in 1897 than it did in 1896 from a larger output in tons. In Bingham Canyon these conditions led to a large increase in output.

After Denver and Pueblo, Salt Lake City ranks as the most important lead-smelting center in the United States at the present time. There are three works in operation there. The Germania has five furnaces (two of 100 tons per day and more, and three of 50 tons) and two copper reverberatories. The Pennsylvania has five blast-furnaces of about the same capacity as the Germania. The Hanauer works have four blast-furnaces each of 40 tons per day capacity.

With respect to metallurgical practice at Salt Lake City, Richard H. Terhune, of the Hanauer Smelting Works, contributes the following: During the summer of 1896 a "Ropp" roasting furnace was erected at the Hanauer works. Its outside dimensions are 16x150 ft.; width of hearth, 14 ft.; total length of hearth exposed to heat, 129 ft. 6 in.; number of fire boxes, four; area of each, 20 sq. ft.; number of rabbles, six; speed of rabbles per minute, 80 ft.; capacity of furnace in 24 hours, 25 to 40 short tons. The average composition of the raw Bingham ore roasted in this furnace in 10 months (the quantity being 10,839 tons) was as follows: 10% silica; 39.42% sulphur; 31.52% iron; 9.20% lead; 4.23% zinc. The average sulphur in roasted ore, treating 39.15 tons per day raw ore, was 6.37%; treating 33.78 tons per day raw ore it was 5.75%; treating 30 tons per day raw ore it was 5.10%. The percentage of fuel used in roasting 10,839 tons raw ore was 16.6, Wyoming and Utah lignites being used.

Ore of the following composition is successfully roasted to 5.4% sulphur without slagging: 26.10% lead; 18% silica; 14.50% iron; 11.80% zinc; 26.90% sulphur. A 400-ton lot of ore of the following composition was roasted down to 6.7% sulphur, at the rate of 25 tons per day, showing an oxidation of 66.1% of the zinc contained in it: silica, 9.20%; zinc, 16.7%; iron, 16.6%; lead, 17.4%; sulphur, 29%; copper, 4.2%.

The rabbles of this furnace have been in use 16 months, and are still serviceable. The longitudinal slot irons show no deterioration. There was caught in 107 ft. of flue 11,000 lbs. flue dust in treating 10,839 tons of ore which had been crushed to pass ¼-in. sq. meshes. The chief wear of this type of furnace is in the truck wheels and axles of the rabble-cars, but this has now been greatly reduced by changes in the construction of those parts of the cars. The furnace is operated by two men per shift.

Among other improvements recently introduced at the Hanauer works are an extensive system of tramways, for roasting- and blast-furnace service, the raising of the blast-furnaces four feet, the concentration of the oxidized ores in bins of 2000 tons capacity, and the perfection of the slag granulation system. The last improvement consists in causing a strong jet of water to strike the stream of overflow slag from the settlers, granulating it, and delivering it to a main trough leading to the elevator pit. Large unlined cast-iron bowls, for matte settlers, are still used, but they are equipped with Terhune's patent movable tap-hole section.

Washington.—The construction of a new smelting works at Northport, Stevens County, to smelt the ore of the Le Roi mine in British Columbia, was begun. The Le Roi mine is largely owned by Americans. Extensive additions were made to the works of the Puget Sound Reduction Co., these including the installation of Ropp roasting furnaces, a refinery, and an arsenic department.

PRODUCTION, IMPORTS, EXPORTS, AND CONSUMPTION OF LEAD IN THE CHIEF COUNTRIES OF THE WORLD. (IN METRIC TONS.)

		Aust'a-Hungary. (*a*)	Belgium. (*b*)	France. (*c*)	Germany. (*d*)	Great Britain. (*e*)	Italy. (*f*)	Russia. (*g*)	Spain. (*h*)	Switzerland (*i*)	United States. (*j*)
1892	Production	9,587	10,146	8,776	97,742	42,800	22,000	883	219.260	*Nil.*	165,724
	Imports	7,348	31,054	72,721	17,501	185,706	2,396	26,075	*Nil.*	3,020	37,089
	Totals	16,935	42,200	81,497	115,243	228,506	24,396	26,958	219,260	3,020	202,813
	Exports	202	24,709	10,057	25,647	59,093	3,017	*Nil.*	154,969	114	11,679
	Consumption	16,733	17,491	71,440	89,596	169,413	21,379	26,958	64,291	2,906	191,134
1893	Production	9,726	12,006	8,119	94,659	36,300	19,898	844	169,318	*Nil.*	151,210
	Imports	6,286	38,028	77,679	23,857	191,261	1,870	28,712	*Nil.*	3,159	58.306
	Totals	16,012	50,034	85,798	118,516	227,561	21.768	29.556	169,318	3,159	209.516
	Exports	270	29,947	9,243	23,945	49,653	3,752	*Nil.*	158,737	89	31.752
	Consumption	15,742	20,087	76,555	94,571	177,908	18,016	29,556	10,581	3,070	177,764
1894	Production	9,683	14.120	8,758	100,753	39,700	19,605	743	152,620	*Nil.*	145,906
	Imports	8,842	43,491	84,674	24,208	164,451	1,499	30,755	*Nil.*	1,412	63,269
	Totals	18,525	57,611	93,432	124,961	204,151	21,104	31,498	152,620	1,412	209,175
	Exports	242	34,690	8,133	24,354	47,813	2,157	*Nil.*	158,735	....	36,288
	Consumption	18,283	22.921	85,299	100,607	156,338	18,947	31,498	....	1,412	172,887
1895	Production	10,362	15,573	7,627	111,058	45,500	20,353	412	160.786	*Nil.*	142,298
	Imports	8,974	45,594	67,183	28,449	165,581	1,780	29,556	*Nil.*	3,571	91,147
	Totals	19,336	61,167	74.810	139,507	211,081	22,133	29,968	160,786	3,571	233,445
	Exports	208	39,996	10,734	27,855	42,872	3,646	*Nil.*	151,129	298	16,447
	Consumption	19,128	21,171	64,076	111,652	168,659	18,487	29,968	9,657	3,273	216,998
1896	Production	11,630	17,222	8,232	113.792	57,200	20,786	....	170.790	*Nil.*	158,479
	Imports	7,486	35,221	80,572	33,016	170.484	1,166	....	*Nil.*	4,850	72,720
	Totals	19,116	52,443	88,804	146,808	227,684	21,952	....	170,790	4,850	231,199
	Exports	272	31,366	11,275	24,828	41,873	2,860	....	166,124	244	54,752
	Consumption	18,884	21,077	77,529	121,980	285,811	19.092	....	24,666	4,106	176,447

(*a*) From *Statistisches Jahrbuch des K. K. Ackerbau Ministerium* and *Magyar Statisztikai Evkönyv.*

(*b*) Production from *Statistiques des Mines, Minières, Carrières, et Usines Métallurgiques.* Imports and exports from *Annuaire Statistique de la Belgique.*

(*c*) From *Statistique de l'Industrie Minérale.*

(*d*) Production, imports, and exports from *Statistisches Jahrbuch für das Deutsche Reich.*

(*e*) Production from statistics of the *Metallgesellschaft*, Frankfurt-am-Main. Imports and exports from Board of Trade returns.

(*f*) From *Rivista del Servizio Minerario.*

(*g*) From *Sbornik Statisticheskikh Svedenie o Gornozavodskoi Promyshlennostie Rossie v zavodskom Godu*, St. Petersburg.

(*h*) From the *Reports of the Comision Ejecutiva de Estadistica Minera.* Imports and exports from the *Revista Minera de España.*

(*i*) From *British Statistical Abstracts* and from figures furnished by the *Direction Générale des Douanes Fédérales*, Berne.

(*j*) The statistics of production are those collected by THE MINERAL INDUSTRY; those of imports and exports are from the *Reports of the Bureau of Statistics*, Washington.

LEAD PRODUCTION OF THE WORLD.(*a*) (IN METRIC TONS.)

Year.	Austria.	Belgium.	Canada.	France.	Germany.	Greece.	Hungary.	Italy.	Japan.
1892	7,252	10,146	467	8,776	97,742	14,426	2,335	22,000	820
1893	7,212	12,006	968	8,119	94,650	14,534	2,514	19,898	941
1894	7,570	14,120	2,587	8,758	100,753	14,434	2,113	19,605	1,415
1895	8,085	15,573	7,467	7,627	111,058	19,845	2,277	20,353	*d*1,400
1896	9,769	17,222	10,977	8,232	113,792	15,180	1,911	20,786	*d*1,400
1897	*c*9,300	*c*14,800	17,698	*c*9,000	118,881	15,946	*c*1,800	*c*20,500	*d*1,400

Year.	Mexico. (*c*)	New South Wales. (*c*)	Russia.	Spain.	Sweden.	United Kingdom. (*b*)		United States.	Totals.
						Foreign Ores.	Native Ores.		
1892	47,532	54,000	883	219,260	799	12,787	30,018	165,724	694.692
1893	64,000	58,000	844	169,318	461	6,127	30,173	151,210	640,984
1894	57,000	50,000	743	152,620	330	9,538	30,162	145,906	617,654
1895	68,000	38.000	412	160,786	1,256	16,036	29,464	142,298	649,937
1896	63.000	30,000	*d*500	167,016	1,530	25.388	33,058	158,479	676,994
1897	71,637	*c*22,000	*d*500	*e*176,000	*d*1,500	33,058	26,942	179,369	720,331

(*a*) The statistics for Austria, Belgium, Canada, France, Germany, Hungary, Italy, Japan, Russia, Spain and Sweden are form the official reports of the respective governments except where otherwise noted. Those for Greece are based on the authorities given under the general table of mineral production of Greece in a subsequent part of this volume. Those for the United States are from data collected by THE MINERAL INDUSTRY. Those for the United Kingdom as specified in note *b*.

(*b*) The production of lead in the United Kingdom is given in two columns. One gives the amount of lead derived from domestic ores, the yield of which is calculated at 95%. as reported in the official British blue books. The other column gives the production of lead in the United Kingdom from foreign ores smelted there. These figures, which are not reported in the official blue books, are obtained by deducting the production of British lead from the total output of the lead smelters of the United Kingdom as stated in the *Statistische Zusammenstellungen über Blei, Kupfer, Zink und Zinn* of the Metallgesellschaft, Frankfurt-am-Main.

(*c*) From the *Statistische Zusammenstellungen* of the Metallgesellschaft, Frankfurt-am-Main.

(*d*) Estimated.

(*e*) R. Oriol, *Revista Minera* etc.

Australia.—Nearly the entire lead production of Australia is derived from the Broken Hill District in New South Wales. These mines have produced upwards of £20,000,000 in silver and lead, the more part of which has come from the oxidized ore above the water level. This oxidized ore, which extends to a depth of 250 to 300 ft., is now being rapidly exhausted, and at present a considerable part of the output is derived from the sulphide ore of the lower level. The reserves of this class of ore are immense. In the mine of the Broken Hill Proprietary Block 10 Co. it has been proved to a depth of 1215 ft., the greatest depth yet attained in the district. At the end of 1896 it was estimated that there were 1,772,665 tons of sulphide ore in sight in the Block 10 mine between the 350- and 650-ft. levels.

The sulphide ore of Broken Hill is generally an intimate mixture of galena and blende with a siliceous gangue. Its treatment has been for many years a problem which has engaged the attention of many metallurgists, and a thoroughly satisfactory solution of it has not yet been reached. The number of processes which have been devised for its treatment is legion. One of them was put into operation at Cockle Creek, N. S. W., last year on a large scale, and proved a failure. (Refer to the article on Zinc elsewhere in this volume.)

At present the method of treating these ores which is generally followed in the district consists of a mechanical separation of the blende, galena, and gangue so far as possible by jigging, etc. The galena concentrates are smelted in blast-furnaces by the ordinary roast reduction process, the furnaces being run with a very zinky slag. The discarded blende is stacked up for treatment at some subsequent time.

Recently, however, a large quantity of this material has been shipped to Swansea where it has been reduced successfully, with recovery of the zinc, by the Fry process.

The Broken Hill ore deposit is worked chiefly by six companies, namely : The Broken Hill Proprietary, which up to the end of 1896 had paid £6,992,000 in cash dividends and £1,744,000 in shares ; the Broken Hill Proprietary Block 10 Co. (£750,000 in dividends); Broken Hill Junction Silver Mining Co. (£80,000); Broken Hill Junction North Silver Mining Co. (£26,000) ; Broken Hill Block 14 Mining Co. and British Broken Hill Mining Co.

The report of the Broken Hill Proprietary Co. for the six months ending May 31, 1897, states that the finished products of the refinery were: Silver, 3,292,311 oz.; gold, 2825 oz.; lead, 11,625 tons ; antimonial lead, 243 tons. The entire output of fine silver was sold in the East. Shipments of lead thither, however, were somewhat affected by the fall in the price of silver. The net profit for the half-year was £147,175, of which £144,000 was distributed in dividends.

No new developments of importance were made in the mines. Exploration of the sulphide ore was continued, and confirmed previous estimates of the vast amount of it that may be depended upon. There are indications at several spots in the part of the mine north of the McBryde shaft which point to a change at a greater depth to an ore higher in lead. The amount of waste removed from the open cut during the half-year was 132,992 cu. yd.; ore extracted, 50,311 tons. The amount of ore raised from the underground works was 152,345 tons.

The smelting furnaces reduced 145,473 tons of ore, with a consumption of 27,820 tons of coke, 55,722 tons of limestone, 6960 of ironstone, and 4659 of slag. The average yield was 8.42% lead and 22.97 oz. silver per ton. In addition to this tonnage 2852 tons of roasted matte were smelted, which yielded 487 tons of lead and a lot of matte containing 451 tons of copper, which was shipped. The leaching works treated 38,052 tons of dry ore (including 19,482 tons of tailings from the old carbonate-ore dressing works), which yielded an average of 9 oz. silver and 0.47% lead per ton.

In the old dressing works 22,550 tons of ore were crushed, from which 4423 tons of high-grade lead concentrates were recovered. Special attention was given to the production of a marketable zinc concentrate, in which respect a good deal of success has been attained. The whole quantity thus far produced has been disposed of in Europe.

The total amount of dividends and cash bonuses paid by this company up to May 31, 1897, was £6,992,000, besides which £1,754,000 in shares of subsidiary companies had been distributed. The total amount of ore produced was 3,299,331 tons, of which 2,776,413 tons had been smelted. The yield of lead in the early years of the mine ranged from 15 to 22½%, but since 1893 has varied from 6 to 8½%. The total production of lead has been 326,060 tons ; of copper, 3391; of gold, 24,981 oz.; of antimonial lead, 2628 tons; and of silver, 87,526,567 oz. In the first six months of the mine's history the ore averaged 742 oz. silver per ton, but the tonnage was small. In the next half-year, with a tonnage four times as great, the average was 131 oz. In the third half-year it was 84 oz., and since that time there has been a nearly regular falling off in value, the general average, 17.54 oz., during the six months covered by this report of the company being the lowest in its history.

During the half-year ended November 30, 1897, the Broken Hill Proprietary Co. produced 182,460 tons of ore, of which 117,606 tons were smelted, involving a consumption of 23,736 tons of coke, 45,418 tons of limestone, 9215 tons of ironstone, and 198 tons of scrap iron. The consumption of coke included that used in refining the silver-lead. The average extraction per ton of ore at Broken Hill was 8.59% lead and 25.24 oz. silver per ton; at Port Pirie 11.02% lead and 23.48 oz. silver per ton. In the leaching works 35,374 tons of ore were treated, yielding 9.33 oz. silver and 0.35% lead per ton. The refinery treated 11,374 tons of silver-lead, yielding 3,292,246 oz. silver, 10,303 tons of refined lead, 2,176.5 oz. gold, 243 tons of antimonial lead and matte containing 26,537 oz. silver and 120 tons of copper. The Broken Hill silver-lead is now refined entirely at Port Pirie. In the first half of 1896 the cost was $6.92 per ton, and in the second half $8.79, the increase being due to the parting of the gold and silver in the refinery instead of shipping doré bars to London as formerly.

The ores smelted at the works of the Broken Hill Proprietary Co. at Broken Hill consist of (1) oxidized lead ores; (2) manganiferous iron ores; (3) kaolin, containing too much lead for the leaching process; (4) siliceous iron ore, also containing too much lead to be suitable for leaching; (5) crude sulphide ore. A small amount of lead and lead carbonate obtained from the leaching works is added to the charge. The fluxes used are (1) manganiferous iron ore, (2) siliceous iron ore, and (3) limestone. The manganiferous iron ore contains 18% Pb, 15% Fe, 21.6% Mn, 4.4% Al_2O_3, 1.8% Zn, 15.3% insoluble matter, and 5 oz. silver per ton. The siliceous iron ore contains 13% Pb, 14.7% Fe, 16% Mn, 6.2% Zn, 27.5% SiO_2, 39% insoluble matter, and 11 oz. silver per ton. The limestone contains from 5 to 7% carbonate of magnesia and 6 to 7% insoluble matter. The limit for carbonate of magnesia is 7.5%, and anything over this is deducted from the price of the flux. The limestone is quarried about 40 miles from Broken Hill. The other fluxes are obtained from the Broken Hill mines.

The smelting is done in 15 rectangular, 80-ton, water-jacketed furnaces, each with 11 tuyères. The bullion is tapped periodically, being led to the moulds by a movable spout. The matte runs out with some slag into pots in which it is cooled, and subsequently separated by sledging. The matte generally contains from 25 to 30% copper, 37% lead, and about 300 oz. of silver per ton. The bullion assays 300 oz. silver per ton. These products are shipped to Port Pirie for treatment. The Broken Hill Proprietary Co. has been for some time past desilverizing and refining its silver-lead at Port Pirie, and is gradually concentrating the ore-smelting at the same place.

The furnace charges at Broken Hill weigh 1000 lb., and are made up as follows: Lead ore (oxidized), 150 lb.; manganiferous iron ore, 125 lb.; siliceous iron ore, 250 lb.; limestone, 275 lb.; kaolin, 175 lb.; coke, 125 lb.; crude sulphide ore, 25 lb.; precipitated lead, 25 lb.; carbonate of lead from leaching works, 25 lb. The analyses of the various components of the charge are as follows:

	I. Oxidized Lead Ore.	II. Manganiferous Iron Ore.	III. Siliceous Iron Ore.	IV. Kaolin.	V. Crude Sulphide Ore.
Pb, per cent	17.0	18.0	13.0	10.0	61.5
Ag, ounces per ton	26 oz.	5 oz.	11 oz.	26 oz.	24 oz.
Cu, per cent	Trace.	Trace.	Trace.	0.5	Trace.
Fe, " "	8.0	15.0	14.7	10.0	2.0
Mn, " "	7.0	21.6	16.0	7.8	1 7
CaO, " "	Trace.	Trace.	Trace.	Trace.	.....
Al_2O_3, " "	8.0	4.4	6.2	8.8	.....
Zn, " "	2.0	1.8	1.7	2.8	8.2
SiO_2, " "	45.2	15.3	27.5	49.0	.....
Insoluble, " "	60.2		32.0	63.5	.....
Sulphur, " "	.....	.....	.....	.....	13.3

The slag is between a singulo silicate and bisilicate, as will be seen from the following analyses:*

	I.	II.	III.	IV.	V.
SiO_2	42.8	38.8	39.8	38.4	38.8
Fe	13.1	10.4	10.2	11.2	10.0
Mn	9.8	10.5	12.2	13.0	12.5
CaO	16.1	16.3	17.5	16.0	16.0
Al_2O_3	9.2	9.1	9.1	9.2	9.2
Silver	1.7 oz. per ton	1.3 oz. per ton	.....	.....	.....

In June, 1896, the Broken Hill Proprietary Co. issued a memorandum in which the quantity of ore in sight in the company's area to a depth of 400 ft. from north boundary to the Jamieson shaft, and to a depth of 500 ft. from the Jamieson shaft to the southern boundary, respectively about three-fifths and two-fifths of the total length of property, was reckoned at 2,019,000 tons. This omitted what had not yet been fully proved by exploration galleries, but which it was considered might safely be counted on to yield 600,000 tons. In the report to the end of November, 1896, it was said that in depth greater thickness of ore body existed than had been suspected, and that whereas above the No. 5 level the thickness had been 50 ft. to 60 ft., at No. 5 level the sulphide zones showed a thickness of 130 ft. to 140 ft. The same memorandum set out that the estimated unworked supplies of oxidized ore might be placed at 1,250,000 tons. In the latest report of the company it is stated that the exploration work recently carried out has more than borne out the estimates of the quantities of ore previously formed.

During the half-year ended December 31, 1896, the Block 10 mine produced 31,278 tons of ore, of which 3220 tons of sulphide ore was suitable for shipment, viz. 1023 tons assaying 30 oz. silver, 30% lead, and 27.5% zinc; and 2197 tons assaying 31.8 oz. silver, 28.4% lead, and 29.2% zinc. The remaining ore, amounting to 28,058 tons, assaying on an average 19.87 oz. silver, 19.28% lead, and 28.5% zinc, was dressed to 6,121 tons concentrates, showing a recovery (independently of the high-grade slimes) of 75.16% of the lead and 37.94% of the silver contained in the crude ore. The Block 10 Co. sold a further 3000 tons of tailings, which brought over £1 per ton on an assay basis of 35% of zinc and 13 oz. of silver, the highest price yet obtained for this class of ore.

The sulphide ore produced by the Block 14 mine averages from 18 to 25% lead, 10 to 16 oz. silver per ton, and from 15 to 20% of zinc. There is also produced a

---

* Henry Watson, "Notes on Smelting at Broken Hill," *Institution of Mining and Metallurgy*, Dec. 15, 1897.

small amount of carbonate ore which contains from 30 to 40% lead and 12 to 18 oz. silver per ton, and is sent directly to the company's smelting works at Port Adelaide. The sulphide ore is crushed to pass a screen with holes 0.1 in. in diameter, and is then washed on Hancock jigs and round tables without previous sizing. The cost of dressing is about 3s. 6d. per ton. The products are a first grade of concentrates assaying 60 to 70% lead, 8 to 10% zinc, and 25 to 30 oz. of silver per ton; second grade assaying from 45 to 55% lead, 15 to 20% zinc, and 20 to 25 oz. silver; middlings assaying 10 to 15% lead, 25 to 35% zinc, and 10 to 15 oz. silver ; fine slimes assaying 30 to 35% lead, 18 to 25% zinc, 20 to 25 oz. silver ; and tailings assaying 6 to 10% lead, 10 to 20% zinc, and 5 to 10 oz. silver. The first grade of concentrates is exported to Europe, present conditions rendering this as profitable as smelting them in the colony. The middlings are stacked awaiting further treatment. The second grade of concentrates and fine slime containing an average of 40% lead and 20% zinc are sent to the smelting works at Port Adelaide, where they are first roasted in 40x17-ft. reverberatory furnaces down to about 8% sulphur, which product is delivered to the blast-furnaces. There are four 12-ton roasting furnaces and two 160x60-in. blast-furnaces, with water-cooled tuyères, which smelt from 420 to 450 tons per week. The blast-furnace charge contains about 20% Zn. The furnaces are driven slowly and with cold air, the object being to oxidize the sulphur remaining in the ore without an undue scorification of lead. This is effected so completely that there is practically no formation of matte. It has not been found possible, however, to reduce the coke consumption appreciably below that required in ordinary lead smelting without causing an undue scorification of lead.

In making up the furnace charges more or less siliceous carbonate ore is added together with the proper amount of ironstone and limestone. The average slag analysis in November, 1896, was: SiO_2, 24.8%; FeO, 28.7%; MnO, 4.4%; ZnO, 15.9%, PbO, 3.3%; CaO, 14.1%; Al_2O_3 3.0%; undetermined, 5.8%. The slag runs well even when it contains as much as 20% ZnO, which often happens; however, it smokes heavily and the furnaces cannot be worked without devices for removing the smoke from the slag taps.

Canada.—The production of lead in 1897 was 19,509 short tons. As heretofore this came almost entirely from British Columbia. The increase over 1896 was very remarkable. Most of this production was shipped to the United States for smelting. The old smelting works at Pilot Bay, which had been idle for some time, were purchased by Braden Bros. of Helena, Mont., agents for the Omaha & Grant Smelting Co., by whom they were remodeled and enlarged, and this year are expected to make a considerable output of silver-lead. The new American tariff law with the increase in the duty on lead in ores from 0.75c. to 1.5c. per pound of lead was somewhat unfavorable to the lead mines of British Columbia, ore with 60% lead having to pay $18 duty.

The Slocan mines have lead-zinc-silver sulphide ore. Although the Rossland district was the first discovered (summer of 1890, the Slocan district being one year later), yet owing to local conditions favoring the latter it became a prominent camp fully two years before Rossland was much talked about. The Slocan at once attained prominence on account of the extreme richness of the surface ores in silver. Of 40 shipping mines but four have concentrators. These will be increased as it becomes essential to work the lower-grade ores. At present only the best part of the ledge is mined, and the ore having been broken by hand is hand-sorted, sacked, and shipped directly to a smelter. Owing to fair railway facilities the cost of freight and treatment is now reasonable ($20 to $25 per ton). Further reductions will, no doubt, be made in the near future. The cost of mining is lower than elsewhere in British Columbia, owing to the favorable topography, the abundance of timber, and a moderately soft country rock. One drawback is the heavy fall of snow, which in the spring is followed by severe snowslides. These interrupt transportation, and unless mine-surface improvements are located with care and judgment they are sometimes severely damaged. This snowfall, however, so facilitates local transportation from the mine to the nearest railway station that much more ore is shipped during the winter than at other seasons. In fact, some of the smaller properties ship only in the winter, "raw-hiding," or dragging in hides, the ore down the mountain over snow.

The present system of transportation is by trails, roads, lakes, rivers, and railroad branches to several points on the Canadian Pacific in the province, and to various transcontinental lines centering at Spokane, Wash., in the United States. The Government is very liberal in building trails and roads. The natural facilities for navigation are remarkably good for so mountainous a country. When transfers must be made, ores are usually sacked instead of being shipped in bulk.

The proposed Crow's Nest Pass line has recently been aided by a subsidy from the Government. It will be a branch of the Canadian Pacific, starting from Lethbridge, in Alberta, and terminating for the present at Nelson or Rossland, British Columbia. Generally speaking, it lies a short distance north of, and parallel to, the international boundary. It will stimulate traffic among various important mining camps on the line of route, thus promoting the concentration of ores, fuels, and supplies at favorable points.

England.—A new discovery of lead ore was made in the Boltsburn mine, where a vein of 5 to 6 ft. wide, yielding 8 to 10 tons galena per cu. fathom, was discovered. A vein about 5 ft. wide and yielding about one ton per fathom was discovered in the Groverake mine, which had previously been considered nearly exhausted. Both these mines belong to the Weardale Lead Co. The formation at these places is Upper Carboniferous, embracing the limestones, sandstones, and shales from the Fell-top limestone to the Tyne-bottom limestone. The Great Limestone is the most productive of lead ore, although the Four Fathom, Scar, and Tyne-bottom limestone, and the smaller limestones are frequently rich.

Germany.—There were no new developments at Mechernich or in the Harz and Upper Silesia, the chief lead-producing districts of Germany. The Neue Kirche Co. is reported to have found galena ore at a depth of 340 ft. in the Amora Mine, near Moosch, in Alsace. The vein is said to be of great length and regularity, 6 ft. wide, and assaying 0.145% silver, 2% copper, and 48% lead.

Mexico.—The Sierra Mojada continues to be the chief lead-producing district of Mexico. The most part of its ore is shipped to Kansas City for reduction. Considerable lead ore is produced in the vicinity of Velardeña, and is smelted at

PRODUCTION OF LEAD AND LITHARGE IN GERMANY.(*a*) (IN METRIC TONS.)

Works.	1893.		1894.		1895.		1896.	
Stolberger Gesellschaft	15,801	136	17,371	149	17,231	....	16,803	166
Rhein-Nassau	2,878	....	4,697	....	5,657	150	6,368	....
Mechernich	20,232	....	16,002	....	19,268	....	19,978	....
A. Poensgen & Söhne, Call	5,161	....	6,611	....	7,171	....	7,385	....
(*b*) Remy Hoffmann, Ems	5,358	....	5,901	....	5,771	....	6,100	....
(*c*) S. B. Goldschmidt, Braubach	7,146	....	9,994	....	12,163	....	11.586	....
Total Rheinland-Westphalia	56,076	136	60,376	149	67,256	150	68,215	166
Walther-Croneckhütte	3,928	736	4,959	673	5,536	856	8,179	2,401
Friedrichshütte	14,938	1,422	15,793	1,489	14,481	1,191	16,349	973
Total Silesia	18,866	2,158	20,752	2,162	20,017	2,047	24,528	3,374
Oberharz	7,596	....	8,683	....	9,003	. ...	10,083	....
Unterharz	5,052	......	5,031	....	4,982	....	4,989	....
Total Harz	12,648	....	13,714	. ...	13,985	....	14,972	....
Saxony (Freiberg)	6,484	286	5,932	217	7,494	272	6,867	232
Rothenbacherhütte, Siegerland	30	267	34	354	....	......	....	....
Anhaltische Blei- u. Silberwerke	143	483	284	446	1,843	230	2,396	422
Nordd. Aff. Hamburg	40	233	81	335	225	472	69	782
Mansfelder Gewerkschaft	135	....	201	......	201	....	208	....
Total Germany	94,423	3,563	101,574	3,663	111,049	3,446	117,761	5,157

(*a*) Compiled from the reports of the *Verein f. die Berg- u. Hüttenmannischen Interessen im Aachener Industrie-Bezirk.* (*b*) Now Gesellschaft des Emser Blei- u. Silberwerks. (*c*) Now Blei- und Silberhütte, Braubach.

that point. The Compañia Minera de Peñoles has two large mines and a smelting works at Mapimi, in Durango, which place is connected with the Mexican Central by a narrow-gauge line 20 miles long. This company made an increased output in 1897. The product, which is low grade in silver and gold, is shipped to Hamburg *via* Tampico. One of the mines is now opened to a depth of 1700 ft. The remainder of the lead production of Mexico is derived from ores mined in various districts and smelted at Monterey, San Luis Potosi, and Aguas Calientes. The high price of lead and low price of silver stimulated greatly the production of lead in Mexico in 1897, the cost of production falling while the value of the product increased. The production in 1897 was 71,637 metric tons, against 63,000 in 1896.

Russia.—The Alagir Mining Co. has been organized and obtained concessions for operating silver-lead mines in the Vladikavkas district in the Caucasus. The capital is 4,500,000 rubles, and the operations are to be on an extensive scale.

Spain.—The exports of lead from Spain in 1897 were 171,774 metric tons, an increase of 3189 tons over 1896; the exports of lead ore were 8267 tons, an increase of 1982 tons. The production by provinces is shown in the following table: (*a*)

Year.	Murcia.	Jaen (Linares).	Cordoba.	Almeria.	Gulpuzcoa.	Totals.
1894	85,465	31,529	17,795	13,295	4,536	152,620
1895	79,636	38,847	25,280	13,707	3,336	160,786
1896	81,922	36.169	32,971	11.658	4,297	167,017
1897	90,000	40,000	30,000	11,000	5,000	176,000

(*a*) Figures for 1894, 1895, and 1896 are from the *Annario de la Mineria, Metalurgia, y Electricidad de España*; figures for 1897 from the *Revista Minera.*

The mining industry of the province of Badajoz is making rapid strides. Important deposits of lead ore have been discovered in the district of Puebla de

Alcocer and at Penalsordo, Capilla, and Garlitos. At the last-named locality mining is to be started on a large scale, as the ore contains 70 oz. of silver to the ton. At Penalsordo several mines are being worked with very satisfactory results. The ore mined in the district of Mazarron averages about 58% lead and 25 oz. silver per ton.

Transvaal.—According to the Rand Central Ore Reduction Co. lead ores containing from 10 to 15 oz. silver per ton and from 50 to 70% lead are abundant in the Transvaal. Early in 1897 this company purchased 150 tons of galena ore from a mine near Pretoria and smelted it successfully. Machinery has been ordered for the purpose of making lead foil, sheet lead, lead pipe, etc., and lead smelting for domestic supply will be undertaken.

Turkestan.—The Turkestan Mining Co. was organized in Russia to develop certain copper and lead mines in the Taschkent district of Turkestan.

Victoria.—A rich silver-lead discovery at the head of the Snowy River, in Gippsland, was reported. Assays indicate the grade of the ore (galena) to be 75% lead, 35 oz. silver, and from 5 to 15 dwt. gold per ton. The lodes are said to be wide and of great longitudinal extent.

THE NEW YORK LEAD MARKET IN 1897.

Last year will long be remembered in the history of lead on account of the large fluctuations to which it was subject. We pointed out in our last review that during 1896 the price of lead had at one time fallen to the lowest on record —in August, when 2.60c. New York was established. This great depression was brought about mainly by the adverse influences created by the financial panic, as a result principally of the silver agitation and the approaching national election, during which time a very marked falling off in consumption of lead was noticeable; there was also a somewhat larger production, though not at all excessive; both of these was more than the market could stand at that period.

In 1897 a change in most of these conditions was noticeable. The hopeful views which the satisfactory result of the elections produced greatly stimulated all enterprises and commerce in general, and lead greatly profited thereby. Besides, it became known long before the present administration entered office that it was the intention of the Republican party to again thoroughly revise the tariff in favor of protection, and it was anticipated that additional duties would be placed on lead. The low range of prices, moreover, induced consumers to lay in larger stocks than they usually carried.

The lowest prices on record during the whole year were those established early in January, when limited transactions took place at about 3c.; but very soon prices commenced to advance, and the beginning of February saw the metal at 3⅛c., and when, in the middle of that month, the Ways and Means Committee recommended an advance in the rates of duty from ¼c. to ½c. per lb., the price quickly advanced to 3.30c., followed by a still rising market during March, when 3.42½c. was freely paid.

Rumors were then current that the new tariff bill might become operative from April 1, and in consequence thereof the duty of 1c. was paid on about 3000 tons of lead held in bond. When this became known prices eased off somewhat, the more so as it soon became apparent that the new customs bill could not be passed by Congress for some time to come, and during April 3.25c. was reached, at which figure prices remained fairly steady up to the middle of June.

It then became evident that the supporters of higher lead duties found favor with the legislators. As soon as the trade realized this buying became very general, so that by the end of June the price had risen to 3.5c. In the third week of July 3.85c. was reached, which was the highest price since the autumn of 1893.

This large advance was followed by a natural reaction, and at the beginning of August 3.65c. was accepted, but the decline was only of a temporary nature, as when the duty became operative at 1½c. for lead contained in ores and 2⅛c. on pig lead, which prevented any foreign material from being imported or retained in this market, prices soon commenced to climb up again, and by the end of August the 4c. mark was reached.

At this time the speculative feeling was predominant all over the country, influenced mainly by the enormous advance on stocks and bonds, and this culminated in a mad rush on the part of consumers and dealers, which about the middle of September drove prices up to 4⅜c., the highest of the year, a figure not reached since 1891. After that the market became dull, but ruled fairly steady.

In October, however, a heavy decline commenced, and soon 4c. was reached, while in November marked signs of weakness were noticeable, and with free selling for account of Western producers the market soon settled down to 3.70c., which figure reigned until the end of December.

The reaction was due to natural circumstances. Twelve months ago we pointed out that, when lead was at its lowest, production in Missouri was constantly on the increase, and, although operations were not very profitable, if at all, it stands to reason that after an advance of about 1½c. per lb. of lead, or $30 per ton, production would be greatly stimulated. Not only did the older mines increase their output, but as soon as it became apparent that higher duties would be levied on lead, active prospecting was carried on in Missouri, with the result that a great many new producers have sprung up, and the probability is that next year their output will be even more felt, and their operations ought to be remunerative wherever only fair deposits of lead ores exist.

Generally speaking, the conditions of trade in the lead market were very satisfactory and healthy during the year. It is true, manufacturers complained when prices were at their highest point, during September and October, of difficulties in selling their products at a profit, but consumers will unquestionably soon be accustomed to the higher range of values, and it can be fairly assumed that consumption during 1898 will be even better than during 1897.

AVERAGE MONTHLY PRICES OF LEAD IN NEW YORK.

Year.	Jan.	Feb.	Mar.	Apr.	May.	June.	July.	Aug.	Sept.	Oct.	Nov.	Dec.	Year.
	Cts.	Cts.	Cts.	Cts.	Cts.	Cts.	Cts.	Cts.	Cts.	Cts.	Cts.	Cts.	Cts.
1892	4.20	4.12	4.21	4.15	4.22	4.16	4.13	4.11	4.11	4.02	3.84	3.80	4.09
1893	3.87	4.23	3.96	4.06	3.89	3.77	3.58	3.41	3.80	3.51	3.41	3.27	3.73
1894	3.19	3.31	3.37	3.43	3.39	2.31	3.50	3.41	3.17	3.12	3.14	3.10	3.29
1895	3.10	3.12	3.12	3.06	3.16	3.25	3.25	3.50	3.35	3.33	3.25	3.22	3.23
1896	3.06	3.19	3.14	3.07	3.03	3.03	2.96	2.73	2.77	2.80	2.96	3.04	2.98
1897	3.04	3.28	3.41	3.32	3.26	3.33	3.72	3.84	4.30	4.00	3.76	3.70	3.58

THE LONDON LEAD MARKET IN 1897.

The opening of the year was quiet in this market, with values ruling steady at £11 12s. 6d. for soft foreign and £11 17s. 6d. for English lead. A little later in the month values hardened somewhat, owing to improved demand, contrasted with only moderate supplies, and before the month closed the available quantities of lead were found to be insufficient, so that soft foreign finally touched £11 7s. 1d., and English was quoted at £12 to £12 11s. 3d. February did not maintain the firmness of the opening month, as the dearth of prompt stuff was relieved by considerable imports of Spanish and American lead, so that values receded to the level at which they were at the beginning of the year, and March saw the price of spot easier still at £11 10s. soft foreign, but toward the close there was again an excess of demand over supply, attended by a rally to £11 13s. 9d. Early in April the value touched £11 17s. 6d., the scarcity having become somewhat acute, but 2s. 6d. of this price was lost as demand subsided. The tendency in May was again upward, and the activity of consumptive demand resulted in an advance to £11 18s. 9d. for soft foreign. A slight easing-off was followed in June by the strongest upward movement of the year, and one which held its way without any serious check through this and the three succeeding months, £12 5s. for soft foreign being touched in June, £12 10s. in July, £13 7s. 6d. in August, and £14 5s. in September. The factors in the advance were, briefly, as follows: In June demand was stimulated by anticipations of a lead duty being imposed in France, and supplies were, at the same time, scarce. In July and August the same conditions of supply and demand were present, white lead and manufactured lead being especially in request, and in September inquiry was exceptionally strong, with great firmness on the part of producers and holders both in England and on the Continent. The squaring of a heavy bear account was a further element in the advance. The activity of consumption remained a feature of the market, also, in October, but buyers appeared to have mostly covered their requirements, and Australian offers came in after a long interval, and consequently prices receded pretty steadily, £13 2s. 6d.@£13 7s. 6d. being the quotation at the beginning of November, while at the middle of the month 7s. 6d.@ 10s. less was quoted. A slight rally was followed by renewed dullness, and in December the building trades suffered from the slackness common to the season, and buyers naturally reserved their orders. Lead consequently closed dull at £12 6s. 3d.@£12 8s. 9d. soft foreign, and £12 8s. 9d.@£12 11s. 3d. for English.

The imports and exports of lead into the United Kingdom for a series of years (in tons of 2240 lbs.), and the maximum and minimum prices of the metal, are given in the following table:

	1897.	1896.	1895.	1894.	1893.	1892.	1891.	1890.	1889.	1888.
	Tons.	Tons.	Tons.	Tons.	Tons.	Tons.	Tons.	Tons.	Tons.	Tons.
Importation of foreign into U. K.	167.442	167,594	162.924	161.861	191.174	182.782	169.724	158,649	145.451	132.911
Exports from U. K......	40,503	41,247	41.666	47,080	48,935	58,101	48,726	55,536	52,153	48,653
Highest price..........	£14 5/	£11 10/	£11 15/	£10 2/6	£10 5/	£11 5/	£12 12/6	£14 15/	£14 15/	£15 15/
Lowest.................	£10 15/	£10 17/6	£9 10/	£9	£9 5/	£9 17/6	£11 5/	£12 5/	£12 5/	£12 5/

RECENT SMELTING PRACTICE IN COLORADO.

BY L. S. AUSTIN.

THE writer confines his observations to improvements in the practice of smelting in this State to the so-called lead and copper smelters, where these metals are used as collectors of gold and silver in the ores. It should be observed that lead-smelting plants are now providing increased accommodations for taking care of the copper-bearing products produced in the lead blast furnaces, and are supplementing these products by the addition of copper ores.

Sampling of Ores.—Notwithstanding the improvements which have been made in automatic methods of sampling, hand sampling, in spite of its greater cost, still prevails at many of the reduction works. At the sampling mills, which are independent of the smelting works, automatic sampling is more used, and where judiciously designed, should be even more reliable than sampling by hand.

Base bullion as the principal product of lead smelting was formerly sampled by taking from each bar two chips or pieces supposed to represent the average of that bar. Thus from a car load of 400 bars or pigs would be obtained 800 chips, which were remelted into a common bar. It has been found, however, that variation would occur owing to the segregation of the precious metals, and at some works it has become the practice to remelt all the bullion in a large kettle, to skim off the drosses, which carry several per cent of copper (sometimes as high as 20 to 25%), and to siphon off the clean metal into molds, taking from the stream a number of samples. These samples, having been remelted, are poured into bullet molds giving an assay piece of about one half an assay ton. The assay piece having been split in halves is trimmed on the cut faces to the exact weight of one half assay ton. These final samples agree almost exactly among themselves, in which respect they show a great contrast to the older way of sampling and assaying. The coppery drosses mentioned above are returned to the blast furnace, and their copper is largely taken up by the sulphur of the charge, while the lead passes to the base bullion, after having again performed its duty as a collector.

Size and Proportions of Furnaces.—Referring especially to the lead blast furnace where a reducing action is desired, it is to be noticed that the height of the smelting column has been increased to 18 to 20 ft. and more with satisfactory results. From 3 to 4 in. of mercury remains the ordinary blast pressure. Higher pressures up to 50 or 60 oz. (6 or 7 in. of mercury) have been used, but this is regarded as excessive and not good practice. Smelters are perceiving that pressure is not the only factor in air supply, and that through defective joints, etc., they have been losing much of the air supposed to be supplied to the furnaces. Estimates of the amount of air theoretically needed and that supposed to be supplied by the blower are far apart, but these defects are being overcome by better construction. It seems probable that in the near future the cylinder blowing engine may be used, supplemented by tight iron pipes from blower to furnace.

At one of the larger works of the State a large rectangular blast furnace was built 66 in. by 160 in. at the tuyères and having an active smelting height of

33 ft. It was put in blast two or three times, but proved unsuccessful, and was subsequently torn down. This experiment cost about $75,000. It was claimed as the reason for the lack of success that at this height of column over-reduction took place, iron sows were made, and the lower part of the furnace became cold because of the burning away of the fuel in the upper zones. Also it was said that because of its great capacity it was not possible, in the then state of the ore supply, to run and correct a given charge before a change had to be made to a new one, and frequently as a result this was a decided detriment to the running of the furnace.

With an increased height of furnace and consequent raising of pressure has come an increase in the boshing of the furnace, not only in the fusion zone, but also in the shaft above it. This increased area affords more room for the escape of the gases, thus lessening the loss of flue dust. In certain instances the width of the furnace at the tuyères has been increased to 60 in., but the tuyères protrude then beyond the jackets. The ordinary width of the furnace is 42 in. The Colorado Iron Works of Denver have brought forward a style of cast-iron jacket connected to an overhead drum placed within the blast pipe. It is expected that the water will be replaced as it boils away in the jacket so that the furnace can be run with a scanty water supply. The firm mentioned has also designed a flexible-metal connection for the tuyères, doing away with the ordinary canvas sacking which permits the escape of so much air.

At the lead works much low grade coppery matte carrying 10 to 20% lead is made. This is roasted and run into a high blast furnace with silicious copper ores making a copper matte of 40% copper. It is the aim to reduce as much as possible the lead in this charge. The amount thus obtained however is so small that the ordinary crucible is abandoned, and a shallow sump substituted from which the lead is periodically tapped.

The copper furnaces of the State which practice semi-pyritic smelting, are no longer driven with a hot blast, but use a small amount of coke, say 5 or 6%.

Recovery of Flue Dust.—This has been worked out in two ways: by the bag-house and by an extensive system of flues. At the Globe Smelting Works and at the American Zinc-Lead Works at Canyon City the bag system is in use. At the latter place the fumes are carefully cooled by passing through sheet-iron flues before entering the bag-house. From such works no visible fumes escape. Since arsenical compounds are caught in this system, which must subsequently be removed, and since a fan must be used to draw off the fumes, it becomes a question whether the other method of an extensive system of large flues is not the better. Occasionally the bags take fire and burn up, making a considerable loss and inconvenience, while the bag system is unsuited for fumes from roasting furnaces, anyway.

The second method referred to has been applied at the Omaha & Grant Works at Denver, where a stack 352 ft. high has been constructed at a cost of $52,000, drawing the fumes through 5,800 ft. of flue 12 ft. wide by 12 or 15 ft. high. The large amounts of flue dust annually collected amply justify the expense the company has been at. The Pueblo Smelting and Refining Company has just adopted the same method. A variation in construction is shown in the use of the Mounier flue at the Philadelphia Smelting Company's works at Pueblo. Not all the flues of this system are in use, however, because of the rapid cooling of the smoke, this seriously detracting from the draft of the stack. The system has been arranged so that any part of the flues can be cut out for cleaning without interrupting the duty of the remainder. At the Bimetallic Works at Leadville the fumes of a blast furnace are blown downward through a pipe, say 6 ft. in diameter, into an annular drum of 16 ft. diameter with outlet above. The velocity of the current, being thus suddenly checked, most of the larger flue dust particles are settled out at once. After repeating this operation the gases pass to a scrubbing tower and are subjected to the action of water trickling over the coke with which the tower is filled. The separation is said to be very good.

Automatic Charging.—The Pueblo Smelting and Refining Company still continues the practice of charging from a large hopper car which is filled at the ground level and then hoisted and discharged at the furnace mouth. The tops of the furnaces are ordinarily closed, and but little air gets through to the flues. According to Hixon,* this should be a fatal objection, but the company, after long use, is still in favor of this method, and, moreover, carries its furnaces full, that is, to a height of at least 18 ft. above the tuyères.

Roasting of Ores.—The automatic roasters are still in successful use, especially for those ores which carry but little lead; but, singularly enough, a partial return has been made to the long hand-roaster. The latter is certainly more satisfactory where the ore is liable to sinter, and a lower roast can also be attained. For the drier sulphides, and where so close a roast is not needed, the cheapness of operation of the automatic roaster everywhere recommends it. The Bruckner cylinder roaster, as at Leadville, can be used on leady ores, since in case of agglomeration the material can be easily barred off the interior of the cylinder with but a few minutes' delay and the charge can be retained until roasted to the degree desired. At the elevation of Leadville, however, the intensity of combustion, on which this cylinder roaster depends, is much lessened as compared with what it is at the sea level, and the results are in consequence less satisfactory. The long hand-roaster keeps to its capacity of 12 to 15 tons per day with a force of three men per shift. The Omaha & Grant Company is the only one which uses the fuse box for a portion of the ores. While they acknowledge the losses arising from this practice, they still consider it the best course to pursue for the preliminary treatment of their zinky ores.

Slag Separation and Disposal.—The reverberatory separating furnace still continues to be used in this State as the most thorough method of separating slag from matte. It has been contended, however, that the united stream of slag and matte when issuing from the furnace should be as little disturbed and scattered as possible and that the slag and matte should then and there be separated. The ordinary method, however, takes no full account of this, and the whole mixed mass is dumped together into the separating receptacle. At the Globe Works at Denver a large separating box is interposed in the system before the molten material goes to the settling furnace. It seems, however, to be an unnecessary complication when the settling furnace is to follow. Most of the smelting works depend upon one or two settling pots to catch the matte. It is, however, an

---

* Notes on Lead and Copper Smelting.

imperfect method, since the molten mass never comes to rest, and the separation must be effected while the slag is flowing across the settling pots.

Handling Materials.—The platform elevator is now freely used, both for returning slag and matte to the upper or charge floor and for handling sulphide ores which are to be roasted. In respect to rehandling material the smelters are behind the practice at the Metallic Extraction Works at Florence, where the ore, after having been shoveled from the cars, is not shoveled again. The problem in the case of the smelters is not insoluble, but it has not yet been undertaken. In spreading out the ore upon the beds some shoveling seems necessary, but the shoveling up of these ores at the beds and the handling of the roasting ores and fluxes in the same way should and can be avoided where labor is high in price and its saving is to be studied.

Machinery.—In operating smelting works the element of certainty should come first, and accordingly we find that engines and boilers, pumps and elevators are duplicated, especially where the regular running of the blast furnaces is concerned. Economy has also been looked to by the use of better engines, such as Corliss, compound, or vertical.

Reverberatory Smelting.—Dr. Pearce, at the Argo Works, still keeps up his large production and is putting through in a single reverberatory some 70 to 75 tons per day. He has increased the number of his mechanical roasters, which have given him so much satisfaction, and has altogether abandoned roasting by hand. He has also built a large reverberatory for smelting bottoms and continues his practice of extracting the gold from these by a secret process. He recognizes the advantage which might arise from using electrolytic methods, but considers under his circumstances it would be inadvisable to change.

At the lead smelters the 40% matte is roasted and smelted in a reverberatory furnace to white metal of 70 to 75%. The charge consists of roasted matte, slag from the succeeding operation, some raw matte and some silicious ore containing copper. The white metal is finally worked up to blister copper in a large modified English cupelling furnace, having a blast pipe on each side of the fire box which blows upon the surface of the molten charge. Cast into pigs which are high in silver and gold, the copper is shipped to the Eastern refineries.

Blast Furnace Fuel.—Charcoal has been given up generally by the smelters, though the Omaha & Grant at Denver will continue to use it until the completion of a contract formerly made. The percentage, of coke in several practice, has been cut to the lowest possible limit, the much larger proportion of sulphides in the charge permitting this. While older practice called for 16 or 18% of fuel, this has been now reduced to 12 or 13% in the case of the lead blast furnaces. Oil residuum from the Florence oil field is used at Pueblo and would be even more extensively used were there not some uncertainty in regard to its regular and sufficient supply.

Changes in the Character of Ores Smelted.—When, in 1893, silver suddenly dropped in value it ruled out many lead ores carrying small amounts of silver. The fall in price acted also in another way since prospecting was diverted to the search for gold rather than for silver ores. Cripple Creek came forward after 1893 and its ores are taking an increasing and important position at the smelters. The result of these conditions was, at first, to create a scarcity of lead for the blast furnaces, so that it paid to bring lead ores from Missouri. The lead works also began to import lead in ores from British Columbia and from Mexico, smelting it in bond, and having made use of it as collector, shipped it abroad, or released it from bond by paying duty, and placed it upon the domestic market. They have found it advisable to increase the lead on the charge to 12 or 15%, where formerly they felt compelled to use as little as 8%, or at times only 6%. Such a policy they realize now is a mistake, and when pursued resulted in heavy lead losses. As before mentioned, the silicious ores of Cripple Creek are much used, from which one would infer that a more silicious slag would be more profitable, but against this contention comes the fact that with the use of a large proportion of zinc-bearing ores such increase of silica is prohibited. Besides this, the more silicious slags, other things being equal, make a more leady matte—an undesirable result, since it sends value into the matte, and likewise causes a greater loss of lead in its subsequent concentration. At the Argo Works, where it is unnecessary to consider the fluxing of the ores to the same extent as in lead smelting, where finely crushed ore can be treated without undue losses, and where small amounts of the collector (copper) are able to clean the slags, the advantages of reverberatory methods are evident.

General Conclusions.—Such, then, are the present conditions of practice. Improvements have been made in mechanical details, which have resulted in a saving of labor, and in effecting cleaner separation. The proportioning of charges and the constituents of slags had already been exploited, so that the metallurgist of to-day can suit the type of his slag to his commercial conditions. The future of this branch of the subject is promising in the direction of cheaper and cleaner work. It will involve, however, radical rather than empirical change.

RECENT IMPROVEMENTS IN LEAD SMELTING.

By H. O. Hofman.

PERIODICALS CONSULTED.

B. & H. Ztg., Berg- und Hüttenmännische Zeitung.
Ch. N., Chemical News.
Comp. Rend., Comptes Rendus Mensuels à l'Académie des Sciences.
Ecl. El., Eclairage Électrique.
E. & M. J., Engineering and Mining Journal.
I. A., Iron Age.
Inst. Min. & Met., Institute of Mining and Metallurgy.
J. Chem. Soc., Journal of the Chemical Society, London.
J. Soc. Chem. Ind., Journal of the Society of Chemical Industry.
M. I., Mineral Industry.
O. Z., Oesterreichische Zeitschrift für Berg- und Hüttenwesen.
Pr. Z., Zeitschrit für Berg-, Hütten- und Salinenwesen in Preussen.
Proc. Col. Sc. Soc., Proceedings of the Colorado Scientific Society.
S. M. Q., Columbia School of Mines Quarterly.
Trans. A. I. M. E., Transactions of the American Institute of Mining Engineers.
Z. Anorg. Chem., Zeitschrift für Anorganische Chemie.
Z. El. Chem., Zeitschrift für Electrochemie.

INTRODUCTORY.

Properties of Lead and of Some of its Compounds.—Spring and Romanoff [*] ascertained by experiment how the miscibility or mutual solubility of zinc and lead increased with the temperature. They melted down in kettles definite quantities of zinc and lead, stirred the mixtures thoroughly, kept them at constant temperatures in a gas furnace, and, after giving them sufficient length of

---

[*] *Z. Anorg. Chem.*, 1896, XIII., p. 29.

time to settle, took top and bottom samples for analysis. Their results are shown in the subjoined table. The temperatures could not be carried much above 1000° C., as zinc then commences to volatilize.

Temperature. Deg. C.	Bottom Sample.		Top Sample.	
	Per Cent. Pb.	Per Cent. Zn.	Per Cent. Pb.	Per Cent. Zn.
475	91.0	9.1	2.0	98.0
514	89.0	11.0	3 0	97.0
584	86.0	14.0	5.0	95.0
650	83.0	17.0	7.0	93.0
740	79.0	21.0	10.0	90.0
800	75 0	25.0	14.0	86.0
900	59.0	41.0	25.5	74.5

The figures show that the critical temperature, *i.e.*, that at which the two metals are perfectly miscible, may be reached below the volatilization point of zinc.

Stead * made some micro-chemical researches on alloys of lead and antimony, tin and antimony, and tin and arsenic. Alloys of lead and antimony with from 1 to 95% antimony were subjected to thermal and microscopical examination. He believes that he has found an eutectic alloy with a little over 12.5% antimony melting at 247° C., and proposes the formula Pb_4Sb with 12.66% Sb and 87.34% Pb.

Mourot † finds that amorphous lead sulphide heated in an electric furnace for 20 minutes with a current of 35 volts and 50 amperes and cooled was covered with crystals, and the crucible in which the experiment had been carried out showed sublimed crystals of the composition of galena and of a sp. gr. of 7.48. With a current of 60 volts and 300 amperes the sulphide of lead was completely decomposed, as well as a mixture of lead sulphide and carbon.

Jenkins and Smith‡ undertook experiments to study some of the reactions that take place between lead and the oxides of sulphur. On repeating the experiments of Hannay,§ who assumed that galena exposed to the oxidizing action of air gave the compound PbS_2O_2, viz ,

$$2PbS + O = Pb + PbS_2O_2,$$

they found that the amount of lead volatilized did not bear any relation at all to the amount of lead present, and could be made to vary greatly according to the velocity of the air-current supplied. They came to the conclusion that the ratio found by Hannay was some accidental coincidence of experimental conditions, and that the compound PbS_2O_2 did not exist. In heating in vacuo to 550° C. lead sulphide and lead sulphate mixed in molecular proportions they obtained sulphur dioxide, and as residue some lead oxide on top of a mixture of lead sulphide and lead sulphate, and a very small amount of lead in a sulphurized condition. At 1000° C. a black fused mass consisting of Pb 80.5, S 6.0, O by diff. 13.5 was obtained. Heating to 500 and 550° C. lead and lead sulphate mixed in molecular proportions gave lead sulphide, the amounts of which varied with

---

* *J. Soc. Chem. Ind.*, 1897, XVI., p. 196.

† *Comp. Rend.*, *E. & M. J.*, May 22, 1897.

‡ *J. Chem. Soc.*, June, 1897; *E. & M. J.*, June 19, 1897.

§ *M. I.*, IV., 465.

duration and temperature of the experiment. Lead heated in a current of sulphur dioxide to from 300 to 400° C. gave lead sulphide and sulphur trioxide which causes the formation first of lead oxide, then of lead sulphate, the equations for the reactions being:

$$\begin{aligned} Pb + 3SO_2 &= PbS + 2SO_3 \text{ and} \\ Pb + 2SO_2 &= PbSO_4 + SO_2\text{, or more simply} \\ 2Pb + 2SO_2 &= PbS + PbSO_4. \end{aligned}$$

This is the reverse of the reaction in the reverberatory furnace. It takes place in the presence of a large excess of sulphur dioxide, while in the reverberatory furnace the sulphur dioxide, as soon as set free, is removed by the draught.

Sampling.—Taylor* describes his method of sampling heaps of iron ore at Iron Mountain, Mo., by driving an iron pipe into them. The size of the ore-particles ranged from that of sand to that of a hickory-nut. The pipe used was 2 in. in diameter and 13 ft. long. In order to prevent its being injured by the blows of the sledge, a collar of ⅝-in. iron and 1 in. wide was shrunk around one end and a pin, about 6 in. long with shoulder, was inserted. The holes driven into an ore-pile were 10 ft. apart and 12 ft. deep; two men using 6-lb. sledges drove 25 holes in a day. The pipe was drawn out by a mule, an additional collar with chain having been attached to the protruding end; two men could, however, easily draw the pipe. The sample remained in the pipe, being sufficiently jammed in by the driving. By raising the pipe into a vertical position it was readily emptied with a few taps of a hammer. In sampling concentrates in this way, it was necessary to draw out the pipe at an angle of 30° in order to retain all of the sample.

Moore† patented a continuous mechanical sampling machine resembling the well-known pipe ore-sampler. The improvement consists in feeding the ore uniformly by means of a revolving horizontal disk placed under the hopper which receives the ore to be sampled.

Claudet‡ publishes some notes on the sampling of silver- and gold-bearing base bullion, with diagrams showing how unequally the precious metals are likely to be distributed. The data cannot be satisfactorily given without using the illustrations. Besides, the subject has been exhaustively treated by Raht.§ The subjoined analyses of transverse sawings will show what the character of the bullion was with which the experiments were made:

	Transverse Sawings.			
Cu	0.16	2.00	0.65	0.25
Sb	0.11	0.57	0.82	0.03
As	0.12	0.18	0.04	0.58
Fe	0.02	0.08	0.08	…………
Sn	…………	…………	0.15	…………
Bi	…………	…………	0.04	…………
Ag	0.3185	3.32	0.4785	0.395
Au		…………		…………
(*a*) Pb	99.2765	93.85	97.7415	98.745

(*a*) By difference.

---

* *E. & M. J.*, February 13, 1897.

† U. S. Patent No. 573,610, Dec. 22, 1896.

‡ *Inst. Min. & Met.*, 1897.

§ *M. I.*, III., 414.

Assaying.—The revised edition of P. de P. Ricketts' "Notes on Assaying," the joint work of Professor Ricketts and Dr. E. H. Miller, will be welcomed by the many friends of the book who have felt the need of a later edition than that of 1879.

L. S. Austin[*] describes a delicate assay-balance made by Smith & Thompson for weighing minute quantities of gold.

Kedzie[†] gives a few details about muffle assay-furnaces for bituminous coal erected by him. The dimensions for a furnace with two 9x15-in. muffles are: fire-box 16x14 in., height of lower muffle above grate 14 in., width of fire-box at muffle-level 12 in., width of flue at back of muffle 2 in., distance of upper muffle above lower one 5½ in., width of flue between the two muffles 8 in., space above upper muffle 4x16 in., area of chimney 9x9 in., and height 15 ft. or more; the damper to be placed in the door closing the ash-pit.

Dwight[‡] describes the new "Cathedral muffle" designed by H. P. Wierum, assayer of the Colorado Smelting Co., Pueblo, Colo. It has on either side a horizontal rib which, while incidentally strengthening the muffle, serves as a support for a loose slab of burnt fireclay about ½ in. thick and of the same width as the muffle. This slab is slipped in to cool suddenly the muffle, filled with cupels, to the required temperature after the lead buttons are freed from the black film of oxide which covers them immediately after fusion. Instead of using a slab the size of the muffle, narrow strips can be introduced to cool certain rows of cupels which are too hot. It was thought that two stories of cupels could be run at the same time, but this proved not to be the case.

Fletcher[§] says that an ordinary small fireclay muffle requires per hour for every 10 sq. in. of floor area 8 cu. ft. of coal-gas for a clear red heat, 10 for a yellow heat, 11 for a bright yellow, and 14 if the temperature is to be high enough to bake china and enamels. With metal muffles, or when the gas can be burned under pressure, a smaller amount of gas will suffice.

Cannon[‖] describes the method in use at the works of the Globe Smelting and Refining Co., Denver, Colo., for assaying lead ores. It differs but slightly from that described by Iles[¶] a few years ago. A 5-g. crucible is charged with 20 g. lead flux (16 bicarbonate of soda, 16 carbonate of potash, 8 borax-glass, 5 flour), 5 g. ore are mixed with the flux, the crucible is tapped to settle the charge, and 20 g. of lead flux are given as a cover when, after again tapping, from four to five nails are inserted and the crucible is placed in a muffle heated to a bright cherry-red and the charge melted down. The fusion lasts from 20 to 25 minutes. When it has become quiet, the muffle is closed and the charge made perfectly liquid. The crucible is now withdrawn, the nails are removed and tapped to free them from any lead that may adhere to them, the crucible is tapped and its contents poured out on a level cast-iron plate, stringing out the slag to a thin thread. By this manner of pouring, the lead button will be found at the extreme end of the slag. It is freed from slag, hammered to remove any foreign substance, and weighed.

---

[*] *Proc. Col. Sc. Soc.*, April 8, 1897.

[†] *E. & M. J.*, Jan. 16, 1897.

[‡] *Trans. A. I. M. E.*, XXVI., p. 992.

[§] *E. & M. J.*, July 17, 1897.

[‖] *E. & M. J.*, Nov. 20, 1897.

[¶] *S. M. Q.*, XV., p. 336; *M. I.*, III., p. 421.

Miller* assayed a rich argentiferous galena ore and a rich siliceous gold-bearing silver ore carrying copper by the niter and cyanide methods. The charges used were: No. 1: ore 1 A. T., litharge 1 A. T., soda 1 A. T., niter 10 g., borax-glass 10 g.; No. 2: ore 1 A. T., litharge ⅔ A. T., potassium cyanide 2 A. T. He obtained with the galena ore the following values:

Silver from	Milligrams Silver.			
	Niter Method.		Cyanide Method.	
	No. 1.	No. 2.	No. 1.	No. 2.
Uncorrected assay	560.93	566.73	525.69	525.45
Slags	4.23	3.73	36.96	35.96
Cupels	7.81	8.06	6.26	6.56
Total silver	572.97	578.52	568.91	567.97

These figures show that potassium cyanide causes a great loss in the slag, the silver of which is imperfectly recovered by re-assaying. The siliceous gold-bearing silver ore gave:

Silver from	Milligrams Silver.			
	Niter Method.		Cyanide Method.	
	No. 1.	No. 2.	No. 1.	No. 2.
Uncorrected assay	174.88	173.80	172.76	171.66
Slags	0.40	0.64	1.22	2.18
Cupels	3.33	2.90	4.07	4.07
Total silver	178.21	177.34	178.05	177.91

The gold by either method ranged from 1.15 to 1.17 oz. per ton. The difference in silver in this case was smaller than in the first one. In order to show the effect of potassium cyanide more clearly, assays were made with two and four assay tons of cyanide.

Silver from	Potassium Cyanide.	
	2 A. T.	4 A. T.
	Milligrams.	Milligrams.
Ore	169.54	162.48
Slag	3.45	8.68
Total silver	172.99	171.16

Weil † gives as a suitable crucible charge for cupels: cupel powder 100, fluorspar 75, sand 75, soda 100, borax 50, litharge 50, charcoal powder 4.

---

* *S. M. Q.*, XIX., p. 43.

† *L'Or*, Paris, 1896, p. 372; *B. & H. Ztg.* 1896, p. 44; *Ch. Ztg. Repet.*, 1896, XX., p. 78.

Meade * describes a so-called improvement on the usual method of determining lead in lead ores in the wet way. It is as follows: Place 1 g. (or more if necessary) of lead ore in a platinum dish, cover with watch-glass, add from 40 to 50 c.c. of solvent (1 H_2SO_4, sp. gr. 1.84; 3 HNO_3, sp. gr. 1.42), heat until action ceases, remove watch-glass and rinse it; add from 10 to 15 c.c. hydrofluoric acid, evaporate to sulphuric acid fumes, cool, dilute to 100 c.c. with water, filter, wash with water containing 2% sulphuric acid, then with alcohol. Dry, burn filter, etc., and weigh as sulphate. If there is much calcite, he advises to remove it with dilute hydrochloric acid † before the beginning of the assay; if there is little, it can be removed from the lead sulphate by washing with acid.

Jones ‡ discusses the technical determination of iron at lead and copper smelting works. The two methods in common use are titration with potassium bichromate and titration with potassium permanganate, the ferric compounds being reduced to the ferrous state by stannous chloride in hydrochloric acid solution and by zinc in sulphuric acid solution. He finds that titration with potassium permanganate in a solution containing more than 5 c.c. strong hydrochloric acid in 300 c.c. water gives unreliable results, and, as it is difficult with lead-bearing ores to keep the amount of hydrochloric acid below 12 or 15 c.c., he condemns the method. In the regular permanganate method he finds that it is important before titrating to filter off arsenic, antimony, copper, lead, and bismuth that may have been precipitated by the zinc, as these finely-divided metals have a reducing effect on the ferric salt formed in titrating, and make the results higher than they ought to be; the pink color, *e.g.*, with an unfiltered solution disappears in one minute, while a clear solution retains it for several hours.

In titrating with potassium bichromate it is essential that copper and antimony be removed, as they interfere with the result, as well as tellurium, which gives a black-looking solution. Jones finds that by boiling the solution with granulated lead, not only is the ferric compound satisfactorily reduced, but interfering metals are precipitated. The results obtained by the modified method are satisfactory.

SMELTING OF LEAD ORES.

In the Ore Hearth.—According to the Report for 1896 § of the "Bleiberger Bergwerks-Union," the loss in lead in smelting in the American ore hearth was 10.56%.

In the Blast-furnace—Lead Slags.—Weinberg ‖ makes a contribution to the discussion of zinc in slags.¶ In smelting at Carlisle, N. M., an ore containing raw: SiO_2 12.65%, Al_2O_3 1.85%, Pb 23.40%, Zn 20.62%, Cu 2.82%, Fe 11.58%, S 26.99%; and roasted: S 6-8%, Au 1.35 oz. and Ag 13 oz. per ton, he found the following two slags to give the best results:

---

* *E. & M. J.*, May 22, 1897.

† An unsatisfactory procedure.—H. O. H.

‡ *Proc. Col. Sc. Soc.*, Feb. 8, 1897.

§ *E. & M. J.*, Sept. 4, 1897.

‖ *E. & M. J.*, Sept. 19, 1896.

¶ *M. I.*, V., p. 404.

SiO_2.	FeO	MnO.	Al_2O_3.	CaO.	Pb	Cu.	Ag.	Zn.	S.
31.90 32.30	31.82 28 77	.... 1.50	8.77 8.34	6.80 7.20	(*a*)1.24 0.33	Trace. n. d.	Trace. 0.0024	15.60 44.86	2.21 n. d.

(*a*) As PbO.

The base bullion assayed gold 16 oz. and silver 62 oz. per ton. The matte had the following composition:

Pb.	Cu.	Fe.	Zn.	S.	Au.	Ag
20.19 22.21	18.55 22.50	15.58 11.15	20.68 22.79	21.35 21.12	0.0003 0.0005	0.07 0.12

The gold contents of the matte varied, however, very much, showing a range of 0.1 and 1.6 oz. per ton.

Influence of Foreign Matter.—Simmersbach [*] gives a full abstract of the report of F. J. Greenway, general manager of the Broken Hill Block 14 Co, New South Wales, as to the treatment of zinc-lead sulphides. He shows that the difficulty has been solved by mechanical concentration furnishing galena concentrates, the best grades being shipped to Europe, the inferior grades being smelted at the coast.

Kloz [†] discusses briefly the smelting of zinc-bearing lead ores. He advocates the use of the R. D. Rhodes reverberatory furnace for the separation of matte from zinky slag rich through particles of matte being held in suspension. The furnace in use at the Arkansas Valley smelter, Leadville, Colo., holds from 50 to 100 tons of liquid slag and matte which is poured in near the flue from ordinary slag-pots as soon as filled at the blast-furnace. The furnace has two tap-holes for matte and slag. Care is had to have a reducing flame in order to prevent peroxidation of the iron in the slag. Impure slag with 6% lead and 10 oz. silver per ton has been cleaned so as to assay only 1% lead and 0.5 oz. silver per ton.

Bartlett [‡] has patented an improvement in his blowing-up furnace [§] by means of which he is enabled to feed continuously the ore-charge on the grate and push it toward the discharge where the clinkers formed will drop into a slag-pot or ore-car.

Harpf [‖] has written a lengthy article with a large amount of quotation of technical literature in which he discusses whether it is permissible to use tin-plate scrap in the lead blast-furnace as precipitating iron, and what effect the tin will have on the refined lead.

Heat Requirement.—L. S. Austin [¶] has made an approximate calculation of the heat requirement of the silver-lead blast-furnace. He bases it on a charge of 2000 lb. producing 1290 lb. slag, 200 lb. speiss and matte, and 254.2 lb. lead, and on the assumption that the gases contain 5% carbon monoxide and 17% carbon dioxide and pass off at a temperature ranging from 115 to 120° C. The heat required is subdivided as follows:

---

[*] *B. & H. Ztg.*, 1896, p. 431.

[†] *E. & M. J.*, April 10, 1897.

[‡] U. S. Patent No. 583,860, Nov. 2, 1897.

[§] *M. I.*, V., p. 619.

[‖] *O. Z.*, 1897, pp. 453, 469.

[¶] *E. & M. J.*, June 19, 1897.

Items.	Coke.	Calories.
	Per Cent.	
Gases passing from the furnace	0.63	90.000
Evaporation of water of coke and charge	0.35	49 400
Expulsion of CO_2 from limestone	1.01	145.440
Reduction of $PbCO_3$ to Pb	0.26	37.885
" " $PbSO_4$ to Pb	0.47	67.600
" " Fe_2O_4 to FeO	0.83	119,820
Decomposition of H_2O in blast	0.82	118,800
Fusion of slag (1290 lb.)	5.38	774.000
" " matte and speiss (200 lb.)	0.83	120,000
" " lead to 1000° C.	0.07	9,245
Decomposition of CO_2 to CO	3.04	437.400
Losses by convection, tuyère water, etc. (by diff.)	1.31	188.240
	15.00	2,157,300

Carbon burned to CO_2, 263 lb. @ 8000 cal. = 2,104,000
FeS " " FeO, 41 lb. @ 1300 cal. = 53,300
2,157,300 cal.

It will be seen that the largest items are the fusion of slag (with the previous reduction of ferric compounds to the ferrous state and the decomposition of calcium carbonate) and the reduction of carbon dioxide to monoxide, requiring 12.27 of the total 15% coke charged.

Roasting of Ores.—Roger[*] patented a circular mechanical furnace which, as far as the leading points are concerned, is a Ropp Straight-Line[†] furnace arranged in the form of a circle.

Hegeler[‡] patented an improvement on a rake and supporting frame to be used in roasting sulphide ores in a shelf-furnace.

Argall[§] patented a mechanical roasting furnace which consists of a revolving inclined cylinder with a hollow rabble through which air is admitted to the roasting ore as it descends slowly through the furnace.

Roberts[‖] patented a continuous mechanical furnace with superimposed hearths, each of which has a longitudinal slot on the sides for the rabble-arm to pass through. A number of brackets attached to vertical I-beam buckstays support the roofs, side-walls, and hearths, and carry the rails on which the trucks supporting the rabble-arms move to and fro.

Gaylor, Cole & Keller[¶] have patented improvements on their roasting furnace, the essentials of which cannot well be given without the use of a diagram.

Fig. 1 represents a cross-section of the latest form of the Wethey single-hearth mechanical roasting furnace in which the rakes, after having passed through the furnace, return above the furnace on rails attached to supports riveted to the I-beam buckstays which support the roof and the lower rails. It will be remembered that Brown[**] has a similar furnace with return track above the furnace attached to the buckstays. It is represented in Fig. 2. In the Bolthoff-Wethey furnace[††] the hearth rests on I beams leaving an open space beneath it, which serves as cooling floor over which the rakes pass on their return-trip.

---

[*] U. S. Patent No. 574,272, Dec. 29, 1896.

[†] *M. I.*, IV., p. 473.

[‡] U. S. Patent No. 592,006, Oct. 19, 1897.

[§] U. S. Patent No. 591,909, Oct. 19, 1897.

[‖] U. S. Patent No. 592,220, Oct. 19, 1897.

[¶] U. S. Patents No. 579,536, March 23, 1897 and No. 579,711, March 30, 1897.

[**] Hofman, *Lead*, 5th Edition.

[††] *E. & M. J.*, May 29, 1897.

The furnace is intended for roasting gold ores to be treated by the chlorination or cyanide process.

Neill* patented an apparatus for compressing and agglomerating roasted ores, cold or hot, and other fine material. It consists of four parts: a horizontal steam-cylinder connected by bolts with a receiving cylinder, the continuation of which forms a conical compression chamber joined to a cooling pipe. Steam and compression pistons are joined to one rod as in an air-compressor. The receiving chamber has on its upper side a hopper for the fine ore which, passing into the chamber, is forced with every forward stroke into the conical compression chamber and thence into the cylindrical cooling pipe.

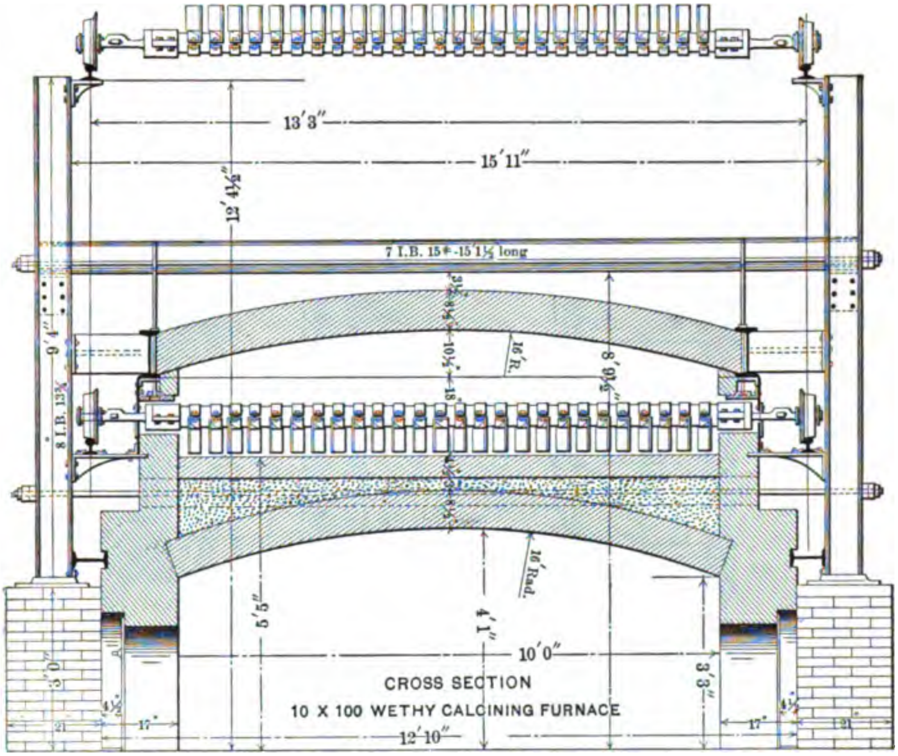

FIG. 1.

General Arrangement of Plant.—Vezin † discusses the paper by L. S. Austin,‡ "A Modern Silver-Lead Smelting Plant." He presents a strong argument for the selection of a level site in preference to an inclined one, the former having the following advantages: "(1) The first cost of the works is smaller; (2) the arrangement can be made more convenient, as the lay of the ground does not compel placing the different buildings or departments in a certain predestined order so as to obtain the fall required; (3) every square foot of the ground may be at will alternatively the equivalent of an inferior or a superior terrace to every

---

* U. S. Patent No. 570,947, Nov. 10, 1896.

† *Trans. A. I. M. E.*, XXVI., p. 1005.

‡ *Trans. A. I. M. E.*, XXVI., p. 398; *M. I.*, V., p. 406.

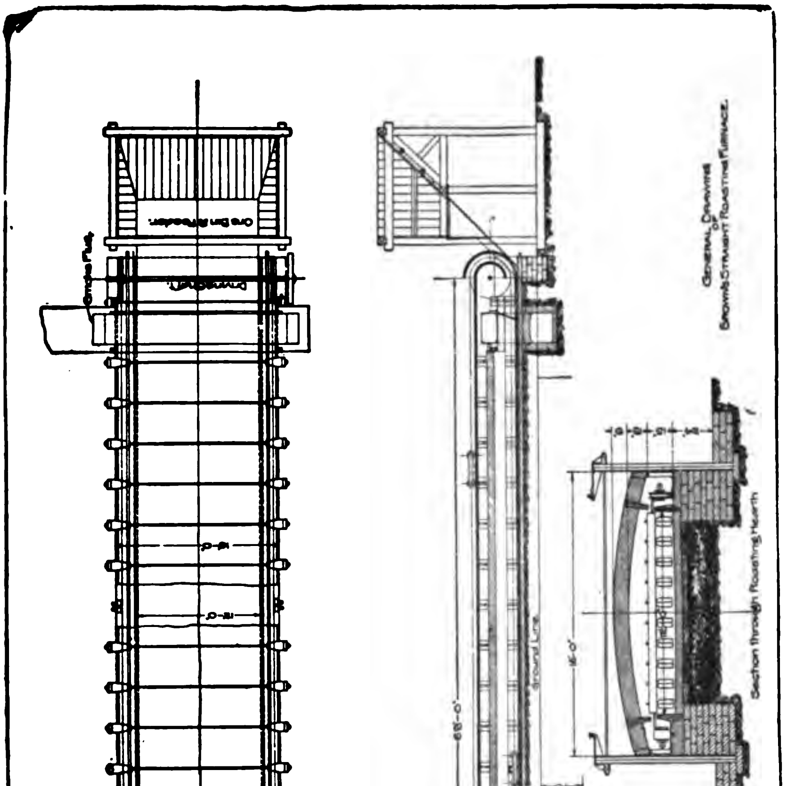
Ore Bin & Feeder.
Smoke Flue.
14'-0"
12'-0"
68'-0"
Ground Line
16'-0"
5'-0"
GENERAL DRAWING OF BROWN'S STRAIGHT ROASTING FURNACE.
Section through Roasting Hearth
Section through Smoke Flue
Section through Fireboxes

FIG. 2.

other, and hence parts of the works that on a terraced site must be far apart in vertical distance can be placed on a level site side by side." As to the extra hoisting which is objected to as the disadvantage of a level site, he says that the cost will not be more than ¼c. per ton, the lift being 30 ft., with a consumption of coal as high as 10 lb. per hour per horse-power, and assuming for repairs the same amount, the total cost will not be more than ½c. The objection that elevators get easily out of order is answered by saying that good ones do not.

In sampling, Mr. Vezin advocates fractional selection for small lots, mechanical sampling for large lots, and shows how easily with the sampler he designed many years ago perfect samples are obtained. As to whether water-jackets should be of cast iron or wrought iron, he shows that with the present mode of manufacture the cast-iron jacket is by far the cheaper. Air-leaks from tuyère bags can readily be stopped by coating them on the inside with glycerine glue. As to the comparative cost of rotary and cylinder blowers he believes that, taking into consideration the back-leak or slip of the rotary blowers, the cylinder blower will not be found more expensive with pressures of from 1 to 2 lb. per square inch.

The Blast-furnace.—Lang[*] publishes some notes on furnace construction and management to which the reader is referred.

Hubert[†] withdraws the gases at will from the top or the back of a blast-furnace by the following contrivance: The throat is closed by a movable arched hood of sheet iron ending in a vertical flue which passes through the floor into the dust chamber. A horizontal canal from the back of the furnace reaches into the same vertical flue. Thus in normal work the gases rise in the hood, dropping some of the coarse dust, and then descend into the dust chamber. If wall accretions are to be cut out, the hood is raised by an overhead traveling pulley and pushed to one side, leaving the entire throat of the furnace exposed, while the gases pass off at the back. Finally the working height of the furnace may be raised or lowered by allowing the gases to pass off through the upper or lower flue.

Matte.—S. E. Bretherton[‡] describes the method of granulating matte used by him several years ago at the American smelter, Leadville, Colo. There were three wooden tanks, 10x5x6 ft., nearly filled with water, two of which were in use while the third was being cleaned. The tanks had a series of holes to run out the water, and a gate to discharge the matte. The matte while being poured from a slag-pot or running from the tap-hole of a large matte-settler was met by a stream of water issuing from a 2-in. pipe that had been flattened out somewhat, the stream dividing up the matte before it fell into the water; a pressure of from 25 to 30 lb. per sq. in. was sufficient. The pipe was inserted just below the top of one end of the tank and about 10 or 12 in. above the water. To prevent the shell of matte forming on the sides of the slag-pot from dropping into the tank, which would have caused serious explosions, bars were laid across the tank. The overflow-water from the tanks was passed through a settling vat to collect fine particles of floating matte, but very little was caught. The advantages of granulating over breaking and rolling are the saving of special machinery and of labor, and a product which roasts more easily than when obtained by crushing, rolling, and siz-

---

[*] *E. & M. J.*, January 23, February 6, 1897.

[†] U. S. Patent, No. 572,011, November 24, 1896.

[‡] *E. & M. J.*, January 9, 1897.

ing; any lumps formed in granulation, say 1 in. in diameter, fall to pieces in the furnace. The matte-shells, however, have to be crushed in the usual way.

Wall Accretions.—Iles[*] discusses the formation and the nature of wall accretions in a lead blast-furnace and the means of controlling if not of preventing them. Wall accretions are formed by substances volatilized in the lower hot zone of a furnace being condensed in the cooler upper zone and adhering to the coolest part, the fixed furnace wall. Zinc and lead being the chief volatile elements in the blast-furnace will be found in the accretions; zinc sulphide, especially when associated with lead sulphide, which is very volatile, gives more trouble than zinc carbonate. In the presence of blende in the charge, scrap iron ought not to be used, as it decomposes zinc sulphide and sets free metallic zinc. The aim in smelting must be to carry the zinc into the slag, and this is only possible if room is made for it. As slags rich in iron are best for slagging zinc oxide, the lime in the typical slag ought to be reduced in proportion as the zinc increases. If room is not made for zinc oxide in the slag, it will be reduced to metal, volatilized, and, after being reoxidized by water, carbon dioxide, or free oxygen, collect as oxide on the side of the shaft. It has been noticed that the finer the particles of the charge, the more rapidly will the accretions form. Thus galena concentrates cause accretions to form more rapidly than coarse lump galena. Dr. Iles notes that with the increase of the cubical contents of the furnace, accretions leave the sides and collect on the ends; and accretions at the back end, the slag-tap being at the front, are always thicker than those at the front.

An average analysis of wall accretions gave: SiO_2, 17.26%; Fe, 13.26%; Mn, 1.60%; CaO, 3.30%; S, 10.90%; Zn, 18.42%; Cu, 0.80%; and a general average of all the assays made during seventeen years Pb, 24.06%, and Ag 29.74 and Au 0.197 oz. per ton. Silica exists in the uncombined state, as silicate mechanically inclosed in the accretion and in part as silicate formed in place. Iron is present as silicate, oxide, and sulphide, and is of course only found when particles of descending charge have adhered to or become mechanically lodged in the accretions. What is said of iron holds good of manganese. Lime is found in the same form in which it enters the furnace. Traces of calcium sulphide have been observed. Sulphur is in combination with zinc and lead as sulphide which, by a secondary reaction, may have been somewhat oxidized, as sulphates occur in wall accretions. Extreme figures for zinc are 5.3 and 63.8%. Copper is found in the form in which it has been charged; the mineral or compound has, however, often undergone chemical changes in the accretion. Besides the constituents named there are found in the accretions charcoal, coke, and flue dust. Dr. Iles found a chlorobromide of lead in a wall accretion, viz.: Pb, 63.729%; Br, 25.326%; Cl, 10.345%; further, crystals of realgar and orpiment.

In order to control if not prevent the formation of accretions, the charging of metallic iron with blende has to be avoided, the slagging of zinc oxide promoted; furthermore, fine ore must be avoided if possible, coarse particles of the charge should be fed more toward the center, and the gases withdrawn not from the back but near the center of the charge.

Flue Dust.—Dr. Wegener,[†] the government physician of the Clausthal Min-

---

[*] *S. M. Q.*, XVIII., 18.

[†] *B. & H. Ztg.*, 1897, p. 172.

ing District, Harz Mountains, lays down the sanitary rules to be followed to dimish the danger of lead-poisoning. Statistical data of cases of lead-poisoning in the different classes of work in the reverberatory furnace, the blast-furnace, the cupelling furnace, and the desilverizing plants for long periods of time are given.

Saeger* describes the improvements made in the collection of flue dust at the silver-lead works at Tarnowitz, Prussia. The gases from the reverberatory smelting and reverberatory roasting furnaces, from the blast-furnaces, and from the refinery pass through brick and iron flues, then through Rösing † chambers, *i.e.*, chambers in which wire strands are suspended from the roof to increase the surface area that the gas-current has to pass on its way to the stack. The condensation of dust and fume is satisfactory, but as the dust collects on the wires the natural draught, especially in bad weather, becomes so hampered as to interfere with the working of the furnaces. In order to remedy this, in 1894 a Capell fan having a capacity of 70,631 cu. ft. air per minute was erected, which besides sucking off the gases forced them through a pair of Richter wet condensers, † 23 ft. high, 10 ft. long, and 6 ft. 6 in. wide, which they enter having a temperature of 200° C. and leave cooled down to 50° C. The flue dust collected by the condensing water is settled out and the clear water pumped again to the top of the condensers. The water, which contains some free acid, is made to pass over flue dust consisting mainly of zinc oxide and lead oxide, in order to neutralize the acid and to recover some of the zinc as sulphate. The neutralization, however, being imperfect, the question how to pump warm water containing zinc sulphate, ferrous sulphate, and uncombined sulphuric acid in solution and fine slimes in suspension had to be settled. An acid-egg was used, the compressed air being automatically turned on and off. The paper describes and illustrates the apparatus fully.

DESILVERIZATION OF BASE BULLION.

Pattinson Process.—Harpf* says that in steam-Pattinsonizing at Přibram, Bohemia, 0.19 % tin has no effect on the liquated blast-furnace bullion assaying 158.6 oz. silver per ton; that in the subsequent crystallizations a point is reached with 58.3 oz. per ton, where with a percentage of tin higher than 0.19 % no further desilverization can be effected, as both crystals and liquid lead show the same tenor in silver.

Parkes Process.—Schnabel † states that the Rössler-Edelmann process of desilverizing base bullion with aluminized zinc has been given up at Hoboken (near Antwerp, Belgium) and at Lautenthal (Harz Mountains, Prussia) as being too expensive.

Hasse ‡ publishes in an important paper the results obtained at Friedrichshütte, Upper Silesia, in refining electrolytically the zinc crusts resulting from the desilverization of argentiferous lead by the Rössler-Edelmann modification of the Parkes process. The base bullion produced at these works is very pure, so

---

* *O. Z.*, 1897, pp. 458, 469. † *B. & H. Ztg.*, 1897, pp. 39, 40. ‡ *Pr. Z.*, 1897, p. 322.

that the reasons which caused the process to be given up at Hoboken and Lautenthal do not seem to come into play at Friedrichshütte.

In working in the usual way with aluminized zinc it was found that not enough fluid zinc-silver alloy was obtained. A mechanical stirrer similar in principle to that patented by Howard* was therefore used and gave satisfactory results. In zinking, the lead was heated to incipient redness and the zinc added as fluid metal. In liquating the crusts, ammonium chloride or sodium chloride was added to the remaining partially oxidized residue in order to free it from all non-oxidized particles of metal and alloy. The amount of residue remaining over to be retreated was only 0.9% on the desilverized lead. Two analyses of silver-crust may show its general composition:

	Ag.	Pb.	Cu.	Bi.	As.	Sb.	Ni.	Co.	Al.	Fe.	Cd.	Zn. by diff.
Single sample..........	6.30	1.96	8.58	Trace	Trace	Trace	0.	98	0.56	0.24	0.10	81.28
Average "	11.32	3.18	6.16	....	"	"	0.51	....		0.24		78.64

The following assays show its percentage of silver: 10.9562, 12.5950, 11.2566, 10.7700, 12.3300, 11.6178. It ought to be stated in this connection that the base bullion produced at the works averages 0.12299% or 35.87 oz. silver per ton; hence the concentration of the silver in the crust is excellent although the figure of 10 or 12% silver is not exceptionally high, if we consider the values of the crusts obtained in American refineries using the Howard stirrer and press with ordinary zinc and, say, 300-oz. bullion.

The experimental plant is represented in Figs. 3 to 6, in which in the Zinc Department, *D* is a dynamo, *S* a switchboard, *E* depositing vats, *R* two cascades, *H* upper reservoir, T^1 lower reservoir, T^2 sump of pump, *L* trough, *P* pump, F_1 a filter-press; and in the Silver Department, *G* is a heating furnace, *A* vats for solution of silver sulphate, B^1 vats for precipitating the silver, F^2 a filter-press, K^1 tanks for solution of cupric oxide, B^2 vats for the precipitation of silver, K^2 tanks for the precipitation of copper, and *P* a hydraulic press for cement silver.

The dynamo *D* is a shunt-wound Schuckert machine built to give, with 1300 revolutions per minute and 8 h. p., a current of 320 amperes at 15 volts. The switchboard *S* has an ammeter and voltmeter, a resistance coil, a switch, and two safety-plugs. The lead wires from machine to depositing vats consist of 19 wires of No. 10 guage (U. S. standard) or of copper rods ¾ in. in diameter; the main conductors are bands of copper ¾ x ⅜ in. The depositing vats *E* (Figs. 3 and 4), of which Figs. 7 and 8 represent a plan and vertical longitudinal section, are of 1-in. pine wood and are lined with 5/32-in. lead; they are 27½ in. long, 23½ in. wide, and 27½ in. deep. On the sides the sheet lead is covered with a thin wooden lining which, leaving an open space on one side where the electrolyte is admitted, forces it to ascend in the depositing vat. The main object of the lining is to avoid the possibility of local or stray currents.

After having experimented in different directions to settle upon the most suita-

---

* Hofman, *Lead*, 5th Ed.

ble electrolyte, this was found to be a neutral or slightly basic solution of zinc sulphate of 1.140–1.160° B. at ordinary temperature.

On leaving the last vat the electrolyte passes over cascades *R* (Figs. 3 and 4), of which the top and bottom one have turned-up edges and contain some zinc oxide and scrap zinc. The object of these cascades is to purify the electrolyte. In dropping from step to step it is aërated and dissolved ferrous salt peroxidized and thrown down; by coming in contact with metallic zinc and zinc oxide, arsenic, and copper are precipitated and the electrolyte is kept slightly basic. Experiments taught that spongy zinc will always be obtained as long as the electrolyte is impure, and that the secret of success in obtaining a solid coherent deposit lies in having an electrolyte that is absolutely pure.

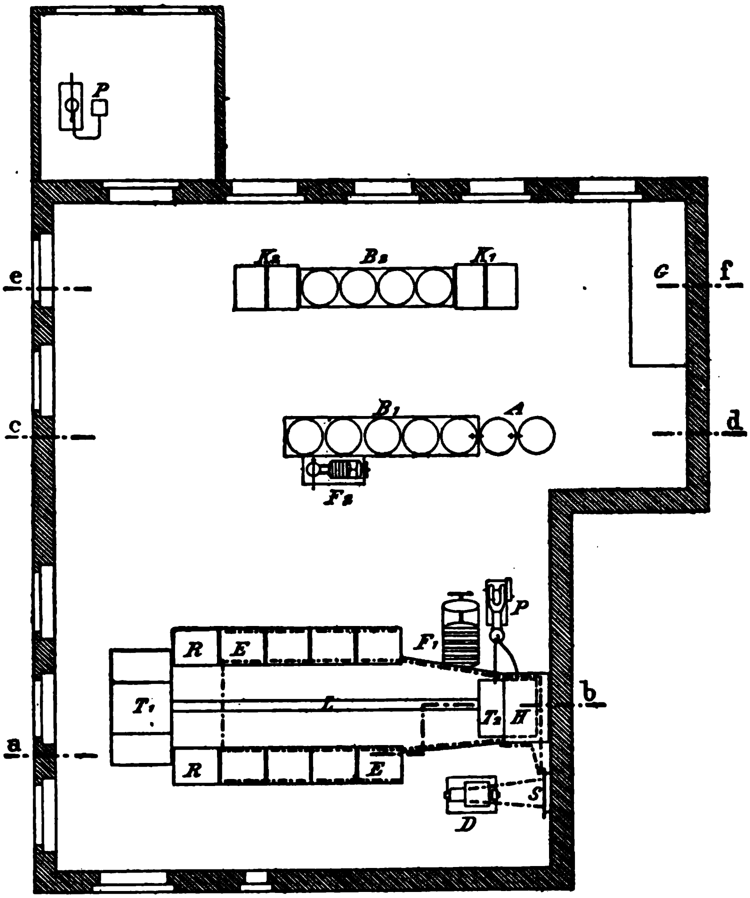

FIG 3.—SCALE 1 : 133⅓.

From the cascades the electrolyte flows into the lower reservoir T^1, which has vertical partition-walls. Here it drops the impurities held in suspension and then passes through the launder *L* to the sump T^2 to be pumped into the upper reservoir *H*. The filter-press F' is used when the lower reservoir T^1 does not sufficiently clarify the solution.

The current used is 8 amperes per sq. ft. of cathode area, and the difference in potential between the vats arranged in series is 1.25–1.45 volts.

The anodes are 19¾ in. square and $\frac{13}{16}$ in. thick and reach to within 6 in. from the bottom of the vat. The distance from the bottom of the anode to the bottom of the shoulder on one side is 22 in., on the other $22\frac{7}{16}$ in., so as to permit placing of an insulating block beneath the higher shoulder and having the anode suspended vertically. An anode weighs from 22 to 66 lb. Anodes are left in the electrolyzing vat until there is danger of their falling to pieces, when they are taken out, washed and added to the anode furnace. Anodes are corroded in from four to six days.

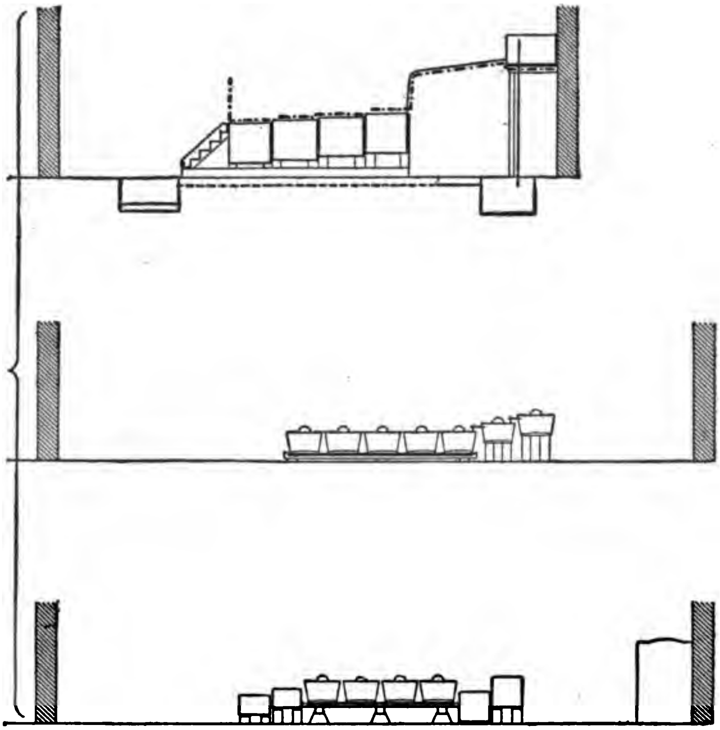

FIGS. 4, 5 AND 6.—SECTIONS ON LINES *ab*, *cd*, AND *ef* OF FIG. 8; SCALE 1 : 183⅓.

The cathodes are produced as in the electrolytic refining of copper, *i.e.*, zinc is deposited on sheet zinc and then stripped and used as cathode. It is not necessary to grease the sheet zinc, as is done to sheet copper, since the deposited zinc does not adhere firmly to the zinc; in fact there is danger of its dropping off when it has reached a certain thickness. Cathodes are removed every three or four days. They are melted down in a graphite crucible, if traces of iron are to be excluded, otherwise in a cast-iron kettle, and cast into plates weighing 8.8 lb. In melting, slight explosions occur, caused by included bubbles of hydrogen.

The anode mud, which is removed weekly or fortnightly, is treated with dilute sulphuric acid in order to dissolve particles of zinc and zinc oxide; silver, lead, and copper remaining behind. The composition of the residue as calculated from the two analyses quoted above is: Ag, 37.41 to 54.92%; Pb, 11.64 to 15.19%; Cu, 50.95 to 29.89%.

Single assays, however, show values ranging from 30 to 60% silver. The method of treatment consists in heating the mud, still contaminated with electrolyte and free acid, with an addition of a hot-concentrated solution of zinc sulphate in a reverberatory furnace in order to oxidize the metallic copper and to sulphatize the silver. The temperature is raised to where all zinc sulphate is decomposed. The furnace is represented in Figs. 9 to 12. The kettle above the fireplace is the one used for melting down cathode zinc. The sulphatized residue is leached with hot water in two circular vats *A*, Fig. 3. The detail of the vat is shown in Fig. 13. A canvas bag holds the residue. The silver solution is discharged through a rubber hose into the second vat. Fresh residue is always charged into the bag of the lower vat and the bag transferred to the upper vat, where the solution is completed.

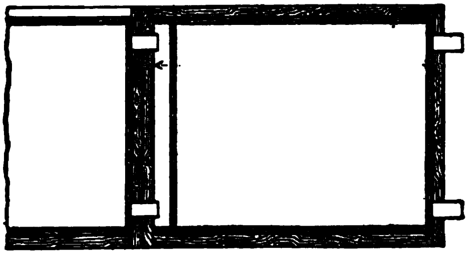

FIG. 7. PLAN.

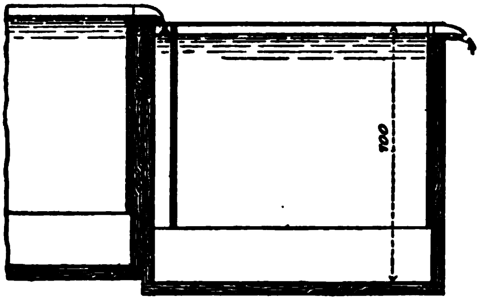

FIG. 8. SECTION.

The solution flows into the precipitating vat B^1 (Fig. 3), where silver sulphate is decomposed by thin iron scrap. The precipitation is finished in a few hours, but in practice the solution is left in contact with the iron for 12 hours. The silver is washed in a Dehne filter-press F^2 (Fig. 3), compacted in the hydraulic press *P* under a pressure of from 330 to 550 lb. per sq. in., dried and melted.

The residue from the solution-bags containing cupric oxide and lead sulphate and some silver, is leached with dilute sulphuric acid in the lead-lined tanks K^1 (Fig. 3); the cupric sulphate solution is then transferred to the vats B^2 charged with sheet copper, which throws down all the silver. Thence it passes to the precipitating tanks K^2, where the copper is precipitated by metallic iron.

Data representing work done, show that with water-power the profits of one

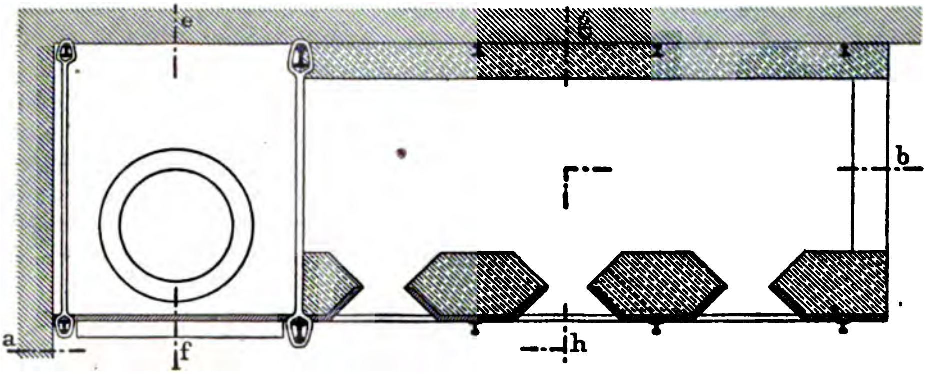

Fig. 9.—Plan and Horizontal Section.

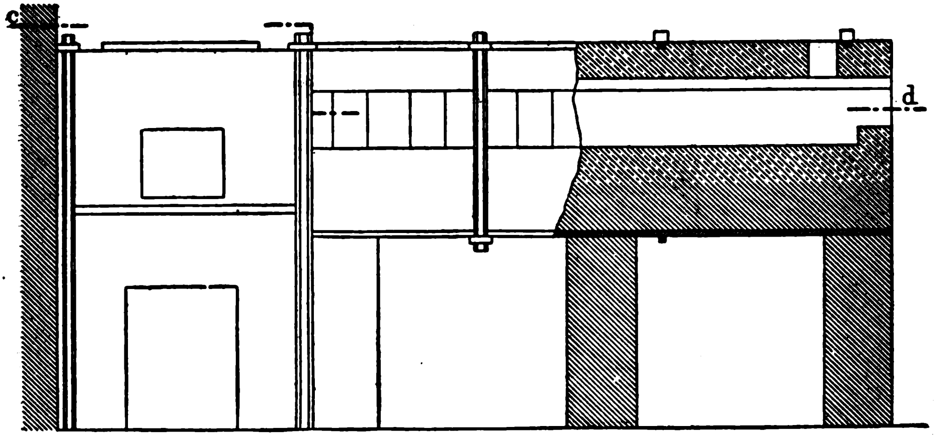

Fig. 10.—Section on Line, *ahb*.

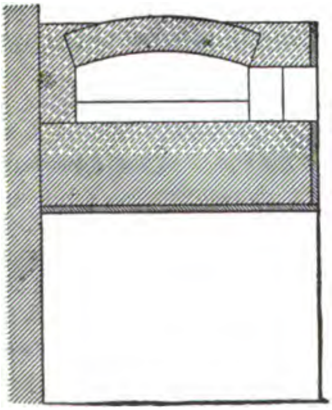

Fig. 11.—Section on *gh*.

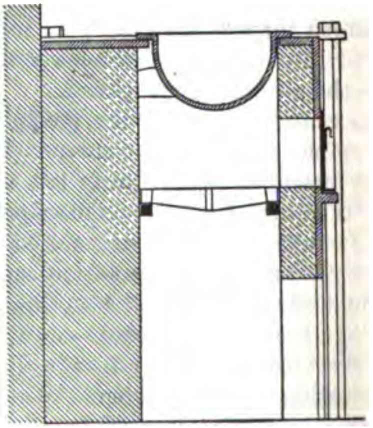

Fig. 12.—Section on *ef*.

year were large enough to pay for the plant, and that with steam-power the profits nearly paid for the outlay.

Electrolytic Refining.—Tommasi[*] discusses with much detail his process of refining base bullion by means of electricity which was discussed[†] last year.

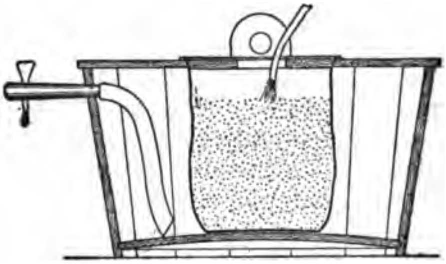

FIG. 13.

PARTING DORÉ SILVER.

Gutzkow[‡] describes his modification of the ordinary method of parting doré silver with sulphuric acid, which makes it suitable for low-grade bullion of, say, 500 fineness, a bullion which parting works connected with establishments desilverizing argentiferous lead usually first purify by charging with rich lead into the cupelling furnace, where most of the copper will pass off with the litharge. This modification consists in (1) treating the doré silver in a large excess of sulphuric acid lighter than 66° B., when both silver and copper will be dissolved; (2) concentrating the solution to 66° B., when anhydrous cupric sulphate will fall out as a crystalline powder and carry down float-gold; (3) siphoning off the clear silver sulphate solution, throwing down the sulphate in the form of hard crystals by diluting and cooling and using the mother liquor again as solvent, when the lack of concentration has been made up by adding fresh acid; (4) removing the gold with the precipitated cupric sulphate from the solution tank and boiling with water in the presence of scrap copper, when hydrous cupric sulphate will go into solution and any dissolved silver be thrown down, the cupric sulphate going to crystallizing vats, the mixture of gold and precipitated silver to be further treated.

In the second paper (August 21) Gutzkow describes and illustrates the plant he proposes to use for the process, and gives an outline of the mode of operating. The dissolving vat is a cast-iron flat-bottomed pan 4 ft. square and 2 ft. deep, with a fireplace, and the settling vat a second pan placed next to it, also 4 ft. square, but only 15 in. deep, the flame from beneath the first pan passing under the second. Both pans have a wooden hood with sliding doors at the front; the hood of the dissolving pan is lead-lined and connected with a chimney insuring a strong draught. Twenty or more slabs of bullion 12 in. square and 1 in. thick, weighing from 40 to 50 lb., are suspended by iron hooks from horizontal iron rods covered with lead which rest on a lead-covered iron frame about 3 ft. square.

---

[*] *Ecl. El.*, 1896, IX., Nos. 40, 42. and 44; *Z. E. Ch.*, III., pp. 310, 341.

[†] *M. I.*, V., p. 412.

[‡] *E. & M. J.*, April 17, August 21, 1897.

The frame is suspended by four iron lead-covered rods which, passing through the hood, are secured by screws to a wooden frame which can be raised and lowered by a windlass. As the roof of the hood consists of planks covered on the under side with sheet lead, the frame with the corroded ends of the bullion slabs can be removed and replaced. The plant will treat 800 lb. bullion in 24 hours. For the corrosion of 800 lb. bullion about 2000 lb. sulphuric acid are required. For regular work 6000 lb. acid are necessary, 2000 lb. in the solution vat, 2000 in the settling vat, and 2000 stored in a tank, viz., the mother liquor from a previous crystallization. The dissolving being timed to take 24 hours, it is so managed that one-eighth of the total acid is added during each period of three hours, when 100 lb. will have been dissolved. At the end of each period the frame and with it the suspended slabs are slightly raised and the anhydrous powdery cupric sulphate, 1 cu. ft. in measure, transferred with an iron hoe to the settling vat, the wooden partition in the hood having been raised for the purpose. The frame and suspended bars are lowered again, mother liquor and fresh acid are given, when first the remaining powdery cupric sulphate will be dissolved and then the bullion attacked. The cupric sulphate in the settling vat is treated with concentrated sulphuric acid to free it from silver sulphate, after which it is removed for further treatment. At the end of 24 hours the mother liquor will have been used up, but the solution in the dissolving pan will be of the same volume as at first. It is now siphoned off into a covered crystallizing pan, and the contents of the settling pan into the dissolving pan, which has now become sufficiently cool to permit raising the sliding doors and exchanging the frame with remnants of bullion for another with fresh slabs to be dissolved. The settling tank is refilled from a reservoir containing mother liquor. The solution in the crystallizing pan, weighing 2000 lb., holds 200 lb. of silver from the bullion, which was 250 fine, and 80 lb. from the mother liquor. It is allowed to cool until the fuming stops, then a steam-jet is introduced until it is cool enough to permit adding water to bring it to 60° B., requiring altogether about 500 lb. of water. The cover is raised, and when the clear solution has cooled down silver sulphate will crystallize out to be worked by one of the usual processes.

The main cost of the operation is the sulphuric acid; but as each pound of acid furnishes 1 lb. of blue vitriol from the 600 lb. of copper contained in the 2000 lb. of bullion of 250 fineness, the cost of parting is offset by the profit made.

Edelmann * criticises the claim of Gutzkow that this process embodies anything new, as it had been carried out since 1870 in the "Deutsche Gold- und Silber-Scheide-Anstalt" at Frankfort-on-the-Main, Prussia. The writer can substantiate this in part from his own experience at the Lautenthal silver-lead smelting works in the Harz Mountains, where the same process as the one at Frankfort was, and is still, in successful operation. Mr. Gutzkow's mode of operating is, however, quite different from that at Lautenthal and may be considered an original contribution, although the principle, as Mr. Edelmann shows, is old.

Ulke † discusses the advantages of parting doré silver at the individual works where it is produced instead of shipping it to large parting establishments. Electrolytic parting is the cheapest method. The cost is approximately ⅛c. per

---

* *B. & H. Ztg.*, 1897, p. 910.

† *E. & M. J.*, Feb. 27, 1897.

oz., excluding the royalty of 0.1c. per oz., with a plant of a capacity of 30,000 oz. for doré bullion, 980 fine, producing both silver and gold 999 fine. Such a plant costs in New York City not more than $8000. The shipping of doré bullion to parting works involves to the shipper a loss in remelting, payment for only tenths of fineness in silver and nothing for traces of gold, a parting-charge ranging from ½ to ¾c. per oz., and a lapse of two weeks before returns are received. All of these disadvantages are avoided if the shipper parts his own bullion, he receiving the returns on the fine silver and fine gold shipped in four or five days.

The North-German Refinery of Hamburg* gives in a patent claim † details as to the electrolytic refining of impure gold which are of much interest, as they form the first authoritative statement on this subject.

In 1880, Bock ‡ stated that it was an easy matter to refine impure gold electrolytically by the use of a neutral solution of auric chloride as electrolyte, a plate of impure gold forming the anode, a thin sheet of chemically pure gold the cathode. Chemically pure gold, ready to be melted down, would be deposited, while iridium, osmiridium, and similar metals remained insoluble and collected in the anode mud. This process, he said, had been in use for several years at the works of the North-German Refining Co., and the gold furnished was, as a rule, chemically pure and rarely under 999.8 fine. Judging from the patent now granted to these same works, the process is not quite so simple as Bock stated. In electrolyzing a neutral solution of auric chloride with gold electrodes and a current of even less than 1 ampere per sq. ft., the chlorine set free does not corrode the anode even if the electrolyte be warmed, but passes off as gas. The same occurs with a current of 10 amperes per sq. ft., if the auric chloride is slightly acid, like that obtained in evaporating a solution of gold in nitro-hydrochloric acid. If the solution, however, is made strongly acid with hydrochloric acid, no chlorine gas will be given off up to a certain point and the anode will be readily attacked. With increase of temperature of electrolyte the amperage can be raised. Thus with from 90 to 100 amperes per sq. ft., and even a stronger current, gold has been dissolved from the anode without chlorine passing off as a gas. In practical work, to the electrolyte containing from 25 to 30 g. gold per liter and warmed to 60 or 70° C. from 25 to 50 c.c. hydrochloric acid of 1.19 sp. gr. are added, the amount varying with the amperage. As some hydrochloric acid is lost by evaporation or from other causes, *e.g.*, by the formation of insoluble chlorides, it has to be replenished.

In electrolyzing impure gold, platinum and palladium go into solution, while most of the iridium and other platinum metals remain unattacked and are collected in the anode mud; silver is converted into insoluble chloride, while lead (also converted into chloride) is taken up by the solution unto saturation, when it falls out; bismuth falls out as oxychloride when the hydrochloric acid cannot take up any more of the metal. Hence gold rich in silver, bismuth, or lead cannot be satisfactorily electrolyzed, since silver chloride and bismuth oxychloride will adhere to the anode and stop the process, and lead chloride will crystallize out and coat the electrodes and the sides of the vat and cover the surface of the electrolyte. Silver chloride and bismuth oxychloride can be removed by mechani-

---

* *Z. El. Chem.*, III., p. 316.

† German Patent No. 90,276, April 16, 1896.

‡ *B. & H. Ztg.*, 1880, p. 411.

cal means,* and lead chloride can be prevented from forming by the addition of sulphuric acid, which has no bad effect on the electrolytic work, but the bullion should contain very little of these elements.

The anode mud, forming by weight about 10% of the anode, contains much finely-divided gold disseminated through it. The reason for this is that part of the gold is dissolved as aurous chloride (AuCl), which splits into auric chloride and metallic gold:

$$3AuCl = AuCl_3 + Au_2.$$

On the cathode pure gold is deposited in using a current of over 46 amperes per sq. ft. as long as the solution contains its standard amount of gold and free acid. By metals more electro-positive than gold going into solution the electrolyte becomes impoverished, and the lack is made up by adding auric chloride. With a high amperage the gold deposit is likely to be spongy if the electrolyte be pure, while it is compact if the solutions are impure.

Experiments have shown, that the electrolyte may contain twice as much platinum as gold without its interfering with the purity of the cathode gold. Thus the electrolyte is used until enough platinum has accumulated in it to pay for replacing it and working it by the usual chemical methods. The electrolyte may contain only up to 5 g. palladium to the liter, a higher percentage interfering with the purity of the gold. As palladium is found usually only in traces in platinum-bearing gold, the electrolyte need not ordinarily be renewed until it is necessitated by the accumulation of platinum.

In working a precious metal like gold in an electrolyte of auric chloride, it is essential that the current shall be of a high amperage and that the anode be not too thick. Thus with an anode $\frac{5}{32}$ in. thick and a current of 37.5 amperes per sq. ft. of anode surface, in 24 hours 90% of the anode will be deposited on the cathode and the other 10% disseminated through the anode mud. The cathode is electro-deposited gold rolled down to a thin sheet. It is made of the same length but narrower than the anode, as it grows quickly in length and width as well as in thickness by the deposited gold. The gold is also more solid than when a larger cathode is used. The electrode distance with an impure electrolyte (*i.e.*, a solid deposit) can be as small as $\frac{3}{8}$ in. In starting with a pure electrolyte (*i.e.*, a spongy deposit) the distance must be greater.

The anodes and cathodes of a vat are of course arranged in parallel, and the vats in series or in series and parallel. The electrolyzing vats are of glazed earthenware, porcelain, or any other substance that will stand hot hydrochloric acid. As the electrolyte is hot, the loss by evaporation must be made up, which is done by any continuous feeding apparatus, dilute gold solutions from washing anode mud, etc., being worked up in this way.

Purifying gold by electrolysis has the advantage over working by chemical solution and precipitation in that the process is very rapid and cheap, the cost of the current being small in comparison with that of the solvents and precipitants generally used.

According to a second German patent,† hydrochloric acid can be wholly or in part replaced by sodium chloride or other chlorides which form double chlorides with auric chloride.

---

* Class 40, No. 90,511, June 9, 1896.

† Patent No. 36,610.

MAGNESITE.

The occurrence, production, preparation, and uses of this mineral were fully described in THE MINERAL INDUSTRY, Vol. II., pp. 455–463. Since that time no new supplies have been discovered in the United States.

The production of magnesite in 1897 was 1,907 short tons, against 2,067 short tons in 1896. The total production continues to be from California, where two mines are operated; one at Child's Valley, 12 miles from Rutherford, and the other in Pope Valley, both in Napa County. The existence of the mineral is known at several other places in California; the mineral is of good quality, but the deposits are too remote to permit shipment to the Eastern States at existing freight rates. The California production has not much chance, therefore, of increasing beyond the requirements of the Pacific coast. Up to the present these comprise material for furnace linings in the rolling mills of San Francisco; the manufacture of Epsom salt and magnesia, which is carried on in San Francisco on a small scale; the preparation of carbonic acid, and for use as a bleaching agent in the manufacture of paper from wood pulp.

PRODUCTION OF MAGNESITE IN CALIFORNIA.

Year.	Crude.			Calcined.		Crude Equivalent of Calcined. Short Tons.	Total Crude.	
	Short Tons.	Value at Mine.	Per Ton.	Short Tons.	Value at Works.		Short Tons.	Value.
1893..........	263	$1,841	$7.00	440	$8,800	880	1,143	$8,000
1894..........	450	2,700	6.00	460	6,500	920	1,370	8.220
1895..........	520	2,600	5.00	840	12,180	1,680	2,200	11,000
1896..........	489	2,300	4.70	789	11,135	1,578	2,067	9,715
1897..........	379	1,516	4.00	764	10,700	1,528	1,907	7,628

In 1897 the consumption of crude magnesite for furnace lining amounted to 212 tons, while the remainder was used for the other purposes mentioned. Operations were carried on by the chief producer during a part of the year only, beginning July 12th and ending November 1st. The greater part of the output of this mine was consumed by the paper works on the Pacific coast, and changes from the soda process to the sulphite fiber process of paper manufacture and a gradual increase in the paper business are causing an increased demand for magnesite for this purpose. At the close of the year this producer reported larger orders for calcined magnesite than ever received before. Inquiries for the product have been received from steel makers of the East, but no business has been done yet in that direction, whither the cost of transportation is an obstacle. Some material has been furnished, however, for furnace linings in Nevada and Montana.

In Europe the only new source of supply of magnesite is Hungary, where it is mined at Minsan, near the Tolsvar railway station, by the "Ungarische Actiengesellschaft für Magnesit Producte" of Budapest. At present this company is producing only crude rock, but it intends to prepare calcined mineral, magnesia hydrate, magnesite brick, and chloride of magnesium. The Hungarian magnesite has the following composition: $MgCO_3$, 94.8%; $CaCO_3$, 0.1%; FeO, 3.2%; Al_2O_3, 1.1%; SiO_2, 0.8%—total, 100%.

The existence of magnesite is reported in Swedish Lapland, in the Tarrekaisefjäll, 25 km. from the tramway which runs from the Sulitelma copper mines to the North Sea.

Austria.—According to a report by C. B. Hurst, U. S. Consul-General at Vienna, under date December 31, 1897, the magnesite mines in Styria, Austria, are owned by two freeholders. One of them at Mitterdorf, near Veitsch, has worked his property for nine years with great profit, and practically enjoys the monopoly of this mineral in Austria-Hungary. The other, who owns a property of about 500 acres adjoining the former, has not yet developed it, but is about to do so.

There are no trustworthy figures of the export of magnesite from Austria-Hungary, for none of the governmental statistical bureaus specifies magnesite in its reports. The value of magnesite exported to the United States from Austria-Hungary amounted to $64,204.60 for the year ending June 30, 1897.

Germany.—Magnesite is mined near Frankenstein in Silesia. The mineral obtained there assays from 46 to 48% magnesia, 0.6 to 0.7% lime, 1.5% ferric oxide and alumina, 4.5 to 5.25% silica, and 46 to 50% carbonic acid. The mineral sells at Frankenstein at 2.80 to 2.90 marks (67 to 69 cents) per 100 kg. for lump, and 3.20 to 3.50 marks (76 to 83 cents) for pulverized. Magnesite produced at Frankenstein is used chiefly in the preparation of carbonic acid for artificial mineral waters, for which purpose it is treated with sulphuric acid. The sulphate of magnesium (bitter salt) which is obtained thereby is of course a marketable product. (See article on "The Chemical Industry" elsewhere in this volume.) The yearly production at Frankenstein is 4,000 to 5,000 metric tons, the largest part of which is consumed in Germany.

Greece.—The magnesite deposits of Eubœa have been described in previous volumes of THE MINERAL INDUSTRY, especially Vols. II. and IV. These mines are worked by the Société des Travaux Publics et Communuax. P. Negris, manager of this company, quotes the following prices for the mineral in 1897: Crude, $4.86 per ton; calcined, $29.20 per ton; brick, $39.93 per ton. About 12,000 tons of crude mineral and 3,000 tons of brick are sold annually, the product being divided between America and most of the principal countries of Europe. According to the American Consul at Athens in a report under date November 19, 1897, printed in *Consular Reports*, January, 1898, Mr. Negris is authority for the statement that the output of the mines of the Greek company cannot be greatly increased.

MAGNESIUM.

MAGNESIUM is coming more and more into use as a commercial metal, owing to improvements in the method of preparing it and the consequent reduction in price. Probably the largest consumption of the metal at the present time is as an illuminant in photography, signalling, etc.; but considerable quantities are consumed as a metallurgical reagent. For an account of the properties and preparation of this metal reference should be made to THE MINERAL INDUSTRY, Vol. II. The chief producer at the present time is the Aluminium und Magnesium Fabrik Actien Gesellschaft of Hemelingen, near Bremen, Germany. Magnesium is also furnished by the Magnesium Metal Co. of Patricroft, Manchester, England. There is none made now in the United States, although a few years ago there was a company engaged in the business. The metal appears in the market in the form of wire, ribbon, powder, cubes, and small bars.

In spite of its crystalline structure magnesium can be rolled into very thin sheets. On account of its feeble strength, however, it cannot be drawn into wire in the usual manner, and the manufacture of magnesium wire is done consequently by means of hydraulic pressure. In this way wire of various diameters can be made. The finer sizes, up to 0.5 mm., serve for the production of magnesium ribbon, which is obtained in widths up to 6 mm. Magnesium powder is prepared from magnesium plates by proper machines. The powder should not contain any metal-meal, but should be composed entirely of minute threadlets. In the melting and casting of magnesium great care is necessary, since the metal burns at too high a temperature. It is melted best under a cover of chloride of lime. If magnesium has become oxidized by long exposure to the air or otherwise, it may be cleaned by immersion in very dilute chlorhydric acid, which should then be washed off with water.

In the form of wire, ribbon, and powder, magnesium is used chiefly as an illuminant. In the form of cubes and bars it serves for the purification of copper, nickel, and steel; also for the dehydration of certain chemicals. In metal refining advantage is taken of the great affinity of magnesium for oxygen. The amount necessary is of course determined more or less by the amount of foreign oxides that are to be removed. In purifying copper from 30 to 33 g. of magnesium per 100 kg. of copper is the maximum that is likely to be required. The treatment of copper by the aid of magnesium requires considerable practice, since if improperly used it may easily happen that the whole will be burned before it has had time to take effect. The magnesium must always be introduced into the molten mass at the end of the process. When the copper is melted the necessary quantity of magnesium is plunged quickly into it by means of copper tongs. If the two metals were mixed before melting the magnesium would be burned long before the copper began to melt, and similarly the magnesium would burn if it were not perfectly immersed in the melted copper. An injurious cooling of the metal is not to be apprehended, since much heat is generated by the chemical reaction which takes place in it. Immediately after the immersion of the magnesium the molten copper will appear greatly overheated and incandescent. The tongs must be held in the molten metal until the whole of the magnesium is melted. As soon as the latter has taken place the metal must be rapidly stirred, and the impurities which rise to the surface may then be removed in the ordinary manner. In the refining of German silver and nickel the magnesium should be added in a manner similar to that described for copper.

Magnesium is now used in industrial chemistry to a considerable extent as an agent of dehydration, being especially valuable where certain liquids, such as oils of various kinds, alcohol, and ether, have to be brought to absolute purity. For this purpose small bars or cubes of magnesium are immersed in the liquid, which is then heated to a temperature of 35° C. A reaction then sets in, which is indicated by the appearance of gas bubbles. The magnesium takes oxygen from the water contained in the liquid, setting free the hydrogen. Rather more magnesium than the quantity calculated should be used, so that when the process is ended some metal may be left, which will make it sure that all traces of water have been removed. The magnesia which is formed is allowed to settle and the liquid is then decanted and filtered. This method of dehydration has some obvious advantages over the use of sulphuric acid, sodium, etc. In Germany there are several aniline oil factories which use large quantities of magnesium for the purification of their aniline oil, which always contains about 2% of water.

MANGANESE.

THE production of manganese ore of all grades in 1897 was 156,787 long tons, against 162,526 long tons in 1896. Arkansas produced 4,430 tons, against 3,038 tons in the previous year; California 300 tons, against 318 tons; Colorado 18,600 tons, against 9,072 tons; Georgia 598 tons, against 2,538 tons; the Lake Superior region 80,261 tons, against 110,317 tons; New Jersey 50,000 tons, against 35,655 tons; Virginia 2,408 tons, against 1,588 tons; and Tennessee 190 tons, against none in the previous year.

PRODUCTION OF MANGANESE ORE IN THE UNITED STATES. (IN LONG TONS.)

Year.	Production.											Imports.		Consumption.	
	Arkansas.	California.	Colorado	Georgia.	Michigan and Wisconsin.	New Jersey.	Tennessee.	Virginia.	West Va.	Totals.		Tons.	Value.	Tons.	Value.
										Tons.	Value.				
1893	2,000	450	4,700	500	110,648	30,602	......	1,500	......	150,400	$347,749	67,717	$960,882	218,117	$1,208,581
1894	3,000	250	5,000	1,000	198,466	27,667	921	1,438	66	237,808	484,882	44,655	432,561	282,463	916,898
1895	2,500	880	7,968	2,614	112,265	42,726	......	1,556	......	170,509	328,107	86,111	747,910	256,620	1,076,017
1896	3,038	818	9,072	2,538	110,317	35,655	......	1,588	......	162,526	339,083	31,489	250,468	194,015	589,551
1897	4,430	300	18,600	598	80,261	50,000	190	2,408	......	156,787	332,700	39,574	340,945	196,961	673,645

The production of silver-bearing manganiferous iron ore, of which a very large quantity is mined at Leadville, Colo., and small amounts at Tombstone, Ariz., and a few places in Utah and Montana, is not included in the above statistics, being reckoned as a silver ore, its silver contents (from 5 to 10 oz. per ton) making it proper to class it as a silver ore, though it is employed practically as a flux in lead-smelting, and its iron and manganese contents are paid for.

The price of manganese ore delivered at Bessemer, Pa., is determined by the Carnegie Steel Co., according to the following schedule, which is based on ores containing less than 8% SiO_2 and 0.1% P:

Tenor in Mn.	Price Per Unit.		Tenor in Mn.	Price Per Unit.	
Per Cent.	Fe.	Mn.	Per Cent.	Fe.	Mn.
Over 49	6c.	28c.	37 to 40	6c.	24c.
46 to 49	6c.	27c.	34 to 37	6c.	23c.
43 to 46	6c.	26c.	31 to 34	6c.	22c.
40 to 43	6c.	25c.			

For each 1% SiO_2 in excess of 8% a deduction of 15c. per ton is made, and 1c. per unit of manganese for each 0.02% P in excess of 0.01%. Settlements are based on samples dried at 212° F. This schedule was the same in 1897 as in the previous year.

The greater part of the manganese production of the United States is used by the steel works for the manufacture of spiegeleisen and ferro-manganese. The domestic supply of ore, however, is far from sufficient to meet the demand for this purpose, and consequently large quantities are imported from foreign countries, especially from Chile, Colombia, Cuba, Greece, Russia, and Spain. A small amount of the highest grade of manganese ore is used in the chemical industry, and the California product, as noted above, is employed in gold chlorination.

Arkansas.—The product of this State assayed from 52 to 54% Mn. As in the previous year it was mined wholly in the vicinity of Batesville.

California.—The product assayed from 65 to 75% Mn. The whole was derived from Livermore, and was consumed by gold chlorination works in the State.

Colorado.—As heretofore the production was derived entirely from Leadville, Colo., the whole being shipped to the steel works of Pueblo, Colo., and Chicago, Ill. This ore assayed from 27 to 31% Mn, averaging about 30%. The steel works have made large contracts for this ore in 1898 and the production is likely to increase in consequence thereof. During December the Illinois Steel Co. closed a contract for 40,000 tons of Leadville manganese ores to be delivered during 1898.

Georgia.—The product, which was all mined in the vicinity of Cartersville, assayed from 42 to 49% Mn.

Lake Superior.—The production credited to this region is manganiferous iron ore assaying from 6 to 8% Mn.

New Jersey.—The production was, as heretofore, franklinite residuum—the manganiferous residue remaining in the zinc oxide furnaces after the zinc of the ore has been volatilized. This residue, which assays about 14% Mn, is used for the production of spiegeleisen at the three works of the New Jersey Zinc Co. The production of residuum and spiegeleisen by these works since 1893 has been as follows in long tons:

Substance.	1893.	1894.	1895.	1896.	1897.
Residuum........	30,602	27,667	42,736	35,655	50,000
Spiegeleisen......	9,615	8,385	14,308	12,408	20,000

Tennessee.—The output of manganese ore credited to this State in 1897 came chiefly from Johnson County. Remoteness from railway retards the development of these mines. One producer reported an output of 1,500 tons, held at the mines awaiting better transportation facilities, which it is expected will be secured during the coming year. These 1,500 tons are not included in our statistics of production.

Virginia.—The ore mined in this State in 1897 averaged from 42 to 49%

Mn. The output came chiefly from Elkton. The Crimora mine, which was closed in 1892, remained idle, but steps were taken to reopen it.

Other States.—A large deposit of manganese ore, between formations of quartzite and lime, was discovered in Emery County, Utah, about 15 miles south of Price. The existence of a deposit of ore near Florence, Wis., was also reported.

WORLD'S PRODUCTION OF MANGANESE ORE. (IN METRIC TONS.)

Year.	Austria-Hungary.	Belgium.	Bosnia.	Canada	Chile. (*b*)	Colombia.	Cuba.	France.	Germany	Greece.	India.	Italy.
1892....	5,862	16,775	7,944	104	51,685	....	18,000	32,406	32,861	11,716	....	1,243.0
1893....	6,649	16,820	7,403	193	36,741	....	13,922	33,060	40,798	5,250	....	810.0
1894....	8,803	22,048	6,588	67	47,994	....	(*a*)	32,751	43,702	9,319	11,583	760.0
1895....	7,733	22,478	8,145	113	24,075	6,025	(*a*)	30,871	41,327	7,250	16,070	1,569.0
1896....	(*a*)	23,265	6,821	112	26,152	10,668	(*a*)	(*a*)	45,062	15,500	(*a*)	1,890.5

Year.	Japan.	New Zealand.	Portugal.	Queensland.	Russia.	South Australia (*b*)	Spain.	Sweden.	United Kingdom.	United States.
1892....	5,027	529	3,399	....	203,436	715	16,910	7,832	6,175	198,749
1893....	14,170	324	....	....	268,621	2,467	1,460	7,061	1,357	160,400
1894....	13,368	543	....	142	243,469	176	340	3,359	1,838	237.808
1895....	(*a*)	213	1,240	361	163,770	49	10,162	3,117	1,293	170,509
1896....	(*a*)	66	1,494	305	(*a*)	*Nil.*	38,265	2,056	1,097	159.304

(*a*) Statistics not yet published. (*b*) Export returns.

Australia.—Manganese ore is largely employed in reduction works in Australia and Tasmania, and it is probable that deposits at Waiheke, Purua Bay, and other parts of the Auckland district will shortly be worked for this purpose.

Brazil.—New mines of manganese were opened in Brazil in 1897 and three cargoes (8,500 tons) of the ore were shipped. The ore shows, according to the assays of Messrs. Pallison & Pearson, 50.61% manganese, with 0.04% phosphorus and 0.92% silica, in the case of the cargo first dispatched, while the corresponding figures for the second cargo were: Manganese, 50%; phosphorus, 0.043%; and silica, 1.7%. The mines are situated in the Province of Miguel, and are the property of Airosa & Co. The State of Minas Geraes in Brazil contains numerous deposits of manganese ore, some of which are now being exploited, the product going partly to the United States, but chiefly to England.

Belgium.—The manganiferous iron ore of the Lienne Valley in Belgium, containing 20% of manganese and the same proportion of iron, when enriched to a high iron content by the Luxemburg calcareous minettes, has been smelted during the last 12 years in the De Wendel blast furnaces at Hayange, Lorraine. Arrangements have now been made for the erection of a blast furnace at Targnon, at the confluence of the Lienne and Ambleve, for smelting the same mixture of ores, to produce spiegeleisen and basic pig iron. Targnon is not far from the Liége coke ovens, and will be connected with the Ruhr coal field by the Duren and Ambleve line as soon as the two or three leagues between Stavelot and Malmedy are completed.

Chile.—The principal deposits of manganese in Chile exist in the Province of Coquimbo and are owned by W. Creighton Tripler of Coquimbo and Joaquin Naranjo of La Serena. The deposits owned by the latter are situated in the hacienda de Marquesa, 32 km. from La Serena, on the line of the Elqui Railway. The greater part of the ore disclosed there assays from 35 to 45% Mn, but there is a vast amount with a tenor of 50%.

New Brunswick.—The manganese deposits near Hillsboro, in Albert County, were developed by the Mineral Products Co., a New York concern, for the purpose of making ferro-manganese at works near Bridgeville. The Salisbury-Harvey Railway completed a branch line 1¾ m. long to the mine.

Greece.—Manganese mining is being carried on at Cape Vani, on the Cyclades, Greece, by a French company, and a similar undertaking has been started at Fourkovuni Point by a British concern. The beds have been proved to exist in parallel layers in a hill abruptly rising from the shore to a height of 400 ft. Over 15 tunnels from 100 ft. to 400 ft. long have been opened in them, and show 2 to 6 ft. of ore. The ore is intermixed with clay, from which it is easily separated.

India.—According to a recent paper by H. G. Turner, before the Iron and Steel Institute of Great Britain, about five years ago attention was directed to a small deposit of manganese ore in the Vizagapatam district of the Madras Presidency, and further exploration brought to light the occurrence of the mineral in large quantities throughout a considerable extent of country. The ore outcrops in various places over, so far as is known, an area of 100 sq. miles, situated within the extensive territories of the Maharajah of Vizianagram. Topographically, the manganiferous area is part of the littoral tract of country which stretches between the range of mountains known as the Eastern Ghauts and the Bay of Bengal. It is about 500 miles north of Madras, and about the same distance south of Calcutta. The East Coast Railway passes over the area. Unlike many manganese deposits in other parts of the world, these Indian deposits of ore occur not in a mountainous tract, but in a plain country, through which the railway passes on a gradient which rises but little above sea level. The country being densely populated, there is a large surplus population, from which abundance of labor is procurable in all months of the year.

The outcrops of manganese ore occur in the form of mounds, low hills, and isolated blocks, while in some places the soil, impregnated with black oxide of manganese, gives indications of ore beneath the surface. The first mound discovered was within a few hundred yards of the railway. This deposit, about 2½ miles in length, covers an area of 660 acres. The detached blocks of ore exhibit marks of being water-worn, and these occur in all sizes, from a pebble up to great bowlders of several hundredweight. These broken fragments are disseminated throughout the soil, sometimes so sparsely as to make quarrying unprofitable; at other places in drifts and beds several feet thick and of value.

The nodules are coated with a thin layer of oxide of iron, and when broken present a steel-gray color. They contain from 45 to 48% Mn. Other nodules are angular, and when fractured show a metallic luster. These are richer in composition than the first-named, containing 48 to 50% Mn. The vein-like masses have been worked to a depth of 50 ft. The ore in these veins varies considerably in manganese, iron, and phosphorus. Some is of a steel-gray color, with 48% Mn, while associated with it is a cindery ore of 35%. Another variety is porous. The occurrence of phosphorus in these quite adjacent veins is peculiar. Two varieties presenting perfectly similar external appearance might contain, the one 0.1% of phosphorus, the other 0.2%.

Further along the deposit occurs ore of equally variable nature. A very fine deposit of soft blue pyrolusite is being worked at the extreme end of the property. This ore is of good quality, yielding, after selection, about 80% of peroxide, while the impure variety yields about 70%. There are several outcrops of manganiferous iron ore, which yields on an average 41.2% Mn, 0.17% P, and 17.9% Fe. There still remains a very large unexplored area lying within the boundaries of this deposit.

During the past year about 30,000 tons of ore were shipped from the Kodur mine by the Vizianagram Mining Co. The high-class ore went to the ferro-manganese makers, and the lower class to the basic furnaces, while the pyrolusite was taken by chemical works. Recently other deposits have been discovered, notably one at a village called Garbham, about 10 miles from the Kodur mine.

Japan.—A British consular report gives the production of manganese ore at the Kunni mines in 1896 as 478 tons. The exports from Hakodate were 1,591 tons, the difference having been made up from the surplus stocks.

Russia.—Caucasian ore is still the main source of supply to the world, but ever-increasing competition makes the trade anything but profitable to either exporters or mine owners. The Tchiatura mines show no signs of exhaustion, and even should the export increase to considerably larger quantities than hitherto, there is no doubt regular supplies can be depended upon for many years to come. There is little or no improvement reported in the manganese trade of the Caucasus, however, the extremely high railway freights, and bad management of the branch railway between the mines and the Trans-Caucasian main line, together with limited facilities at the port of Poti, being as heretofore obstacles to the development of the industry.

During the summer the producers of manganese ore in the Caucasus formed an association for the control of the production and price of ore. A movement for reduction in railway freight was also inaugurated, a reduction from 10 kopeks to 3 kopeks per poud being asked for. At this time the price of ore was 8 kopeks per poud ($1.70 per metric ton) at Tchiatura station.

Four new deposits of manganese ore were discovered in the vicinity of Tchiatura in 1897. Analyses of the ore gave the following results:[*]

	No. 1.	No. 2.	No. 3.	No. 4.
	Per Cent.	Per Cent.	Per Cent.	Per Cent.
MnO_2	79.860	90.80	86.20	....
Mn_3O_4	....	....	....	55.300
S	0.276	0.40	0.53	0.210
P	0.100	0.12	0.09	0.105
H_2O	1.890	0.71	1.26	2.570
Undetermined	17.874	7.97	11.92	41.395

Spain.—At the meeting of the German Geological Society in May, Prof. Klockmann of Clausthal described a deposit of manganese ore recently opened

---

[*] N. Sokolow: *Zap. imp. russk. techn. obschtsch.*, 1897; 31, No. 8/9, 7.

up in the Spanish province of Huelva. Manganese ores have long been worked on a large scale in the province, but until recently workings were confined to the pyrolusite at the outcrop. Recent explorations have shown that the ore at greater depths consists of a mixture of manganese carbonate and silicate, of great and uniform thickness.

West Indies.—The discovery is reported of a valuable bed of manganese in the island of St. Martin. The ore is described as being of superior quality, and the bed is said to extend over a considerable area. Exploitation of the deposit is contemplated by a Boston company.

METALLURGY OF MANGANESE.

The world's production of manganese ore is consumed chiefly in the manufacture of ferro-manganese and spiegeleisen. These artificial substances are used in steel making to facilitate reduction and also for carbonization. Commercial ferro-manganese generally contains 80% of manganese; the other constituents, as carbon, iron, silicon, phosphorus, and sulphur vary considerably according to the quality of the ores from which it is produced. The following is an average analysis of commercial 80% ferro-manganese: Manganese, 80%; carbon, 5%; silicon, 0.5%; iron, 14.25%; phosphorus, 0.2%; sulphur, 0.5%—total, 100%. Spiegeleisen contains from 12 to 20% of manganese. The other constituents vary in proportion according to the ores used. The contents of metallic iron range between 60 and 75%, carbon between 2 and 4%, while the sulphur contents should not exceed 0.05%.

The prices of ferro-manganese and spiegeleisen are governed entirely by the percentages of manganese and iron contained therein; the carbon contents having no influence upon it, although high carbon contents are generally desirable. As the ferro-manganese in the market is generally 80% grade, a unit of manganese would cost 60c., if a ton of ferro-manganese costs \$48. A 60% grade would cost, according to this valuation, 60×60=\$36; but it must not be forgotten that the less manganese the more iron is contained in the metal. It costs more fuel to produce a high grade ferro-manganese, and it will render better services than a poorer quality. The latter, as well as spiegeleisen, is not used to any great extent at present, at least in this country, where about 80% of standard ferro-manganese are used to 20% of spiegeleisen.

M. Henri Moissan has described a process for the preparation of manganese from its ores by reducing them electrically. Pure protoxide of manganese is mixed with carbon and heated in an arc of 300 ampères and 60 volts. In five or six minutes a complete reduction is effected, and a button weighing from 100 to 120 g. remains at the bottom of the crucible. The reduction can be made with a 100-ampère 50-volt arc, and takes from 10 to 15 minutes. Operating with an excess of carbon, the following analyses were made of the metal obtained:

	1.	2.	3.	4.
	Per Cent.	Per Cent.	Per Cent.	Per Cent.
Manganese	85.00	85.82	90.60	94.06
Carbon	14.59	13.98	10.20	6.35

If the reduction take place in the presence of an excess of oxide the quantity of carbon is much less, and in some experiments only 4 to 5% was obtained. Manganese, when prepared in this way, can only be kept in open jars, if it contains but little carbon. M. Moissan thinks that this reaction is easily applicable to the commercial preparation of metallic manganese, and as the molten metal can be refined very well in an excess of oxide, manganese free from carbon and silicon can be obtained.

THE MANGANESE ORE INDUSTRY OF RUSSIA.

ALL the manganese ore known in the market as Caucasian comes from Chiaturi in the Government of Koutais, no other deposits in the Caucasus having been worked commercially, though movements have been made lately toward the exploitation of some of those on the Choruk River southward from Batoum. The first shipments from Chiaturi were made in 1879 when 871 tons (2,240 lb.) were produced. The total production of these mines up to date is estimated at 1,682,400 tons. The production and exports since 1884 have been as follows:

Year.	Production	Exports.	Year.	Production	Exports.
1885.........	58,722	41,896	1892.........	165,101	129,835
1886.........	67,985	58,751	1893........	166,420	123,228
1887.........	51,890	59,523	1894.........	180,533	154,832
1888.........	29,401	49,076	1895.........	160,277	171,608
1889.........	68,439	55,489	1896........	....	....
1890.........	168,840	135,492	1897.........	231,868	....
1891.........	98,670	84,040			

The ore of Chiaturi occurs as a bedded deposit, lying almost horizontally, near the tops of the lofty hills in the vicinity of the village. This bed has been opened on seven of the mountains near Chiaturi. It occurs in a brown sandstone of Eocene age, and has an average thickness of between 6 and 7 ft. Slight faulting has occurred in some instances, but few folds are observable, and the bed is free from sudden or extreme variations from the average thickness.

The deposit has a distinctly stratified structure, and is composed largely of pyrolusite, but other oxides of manganese also occur. In many instances strata of sandstone or loose, sandy material are intercalated with the manganese ore.

The area given by the government engineers as embracing the whole of the bed at present known is about 55 sq. miles, but this includes not only the existing bed, but also the unknown area of the valleys and ravines intervening between its various segments. It is quite certain, however, that an area of more than 22 sq. miles of the present surface is underlaid by ore available for mining, and on this basis it is estimated that even if the crude and wasteful methods now pursued should be always continued, the bed will yield more than 80,000,000 tons of marketable ore.*

The ore of Chiaturi is high in manganese. In some localities, over limited areas, the material composing the bed, without sorting or cleaning, carries 50% of the metal, and the average for such material is probably from 40 to 45%; while ore from which barren material has been thoroughly separated contains, in some

---

* Frank Drake, "The Manganese Ore Industry of the Caucasus," a paper read at the Meeting of the American Institute of Mining Engineers, February, 1898.

instances, as much as 61%. The imperfectly sorted ore that is exported generally runs from 46 to 56% in manganese, the average, probably, being between 51 and 52%. With proper care, no ore from Chiaturi should carry less than 51%. Phosphorus at present averages about 0.16%, and silica not above 8%.

The following is a complete analysis of a sample of very well sorted and cleaned ore from Chiaturi: Manganese peroxide, 86.25%; manganese protoxide, 9.47; iron peroxide, 0.61; oxide of copper, 0.01; oxide of nickel, 0.30; alumina, 1.74; lime, 1.73; magnesia, 0.20; baryta, 1.54; potash and soda, 0.22; silica, 3.85; carbonic acid, 0.63; sulphur, 0.23; phosphoric acid (0.141 P.), 0.323; combined water, 1.850—total, 99,953%. (Metallic manganese, 54.90%.)

The physical characteristics of the manganese ore of Chiaturi are unfavorable to its commercial value. The proportion of large pieces obtained is small, and much of the ore is quite soft, and grinds to a fine powder during the handling incidental to mining, cleaning, and transportation. The loss of ore during transport is thus larger than it otherwise would be, while the high proportion of fine ore is sometimes considered objectionable by consumers.

It is difficult to arrive at the average cost of production at Chiaturi, but for the more favorably conditioned properties Drake considers that 92c. per ton of clean ore is a fair approximation. This cost is divided as follows: Labor, 39c.; timber and other supplies, 4c.; general expense, 16c.; royalty, 17c.; subscription to producers' association, 16c. In explanation of the last item, the manganese ore producers all contribute to a fund which is expended, under the supervision of the government, for purposes of general utility.

The transportation of ore from the Chiaturi mines to Poti on the Black Sea (which is the principal shipping port) is effected in three stages. The ore is first brought down the mountains to the railway station at Chiaturi, then carried on the narrow-gauge railroad to Sharopan, and from there taken over the main line of the Trans-Caucasian Railway to Poti. The freight from the mines to Chiaturi varies from 65c. to $1.30 per ton, from Chiaturi to Sharopan, a distance of 25 miles, the charge is $3.28 per ton, to which must be added 36c. per ton for station expenses, weighing, loading at Chiaturi and transferring at Sharopan. The freight from Sharopan to Poti, 83 miles, is 52c. per ton, to which must be added about 29c. per ton for expenses at Poti, including loading on vessels. The ocean freights from Poti to ports of Western Europe vary from 9 to 15s. per ton. At present the rate to English ports is about $3.03 (12.5s.) to which must be added 12.5c. for insurance, sampling, etc. Freights to America are generally about 35c. per ton more than to England. A duty of 16.5c. per ton is levied on exports of manganese ore from Poti, the proceeds being applied to the maintenance and improvement of the port. Thus it appears that cost (neglecting moisture and loss in transit) of Caucasian ore delivered c. i. f. at English ports is about $9.40 per ton.

The price in England of such ore is at present about 9.5d. per unit of metal, the percentage of the latter being determined on the basis of ore dried at 212° F., and a deduction being made from the gross weight for the moisture as shown by sample. At this rate a 52% ore is worth $9.97 per ton, dry weight. Since the moisture and loss in transit amount to from 5 to 7%, or even more, it is evident that there is little or no profit in the business.

MEERSCHAUM.

SEPIOLITE, which is commercially known as meerschaum, is a compact mineral of fine earthy texture with a smooth feel. Its hardness is from 2 to 2.5 and its sp. gr. 2. It is so soft as to be scratched easily by the finger nail. In color it is grayish white, white, or with a faint yellowish or reddish tinge; it is sometimes bluish green. In composition it is a hydrous silicate of magnesium, represented by the formula $2H_2O$, $2MgO$, $3SiO_2$, which is equivalent to silica 60.8%, magnesia 27.1%, and water 12.1%. Some analyses show more water, which is probably to be regarded as hygroscopic.

In the closed tube sepiolite yields first hygroscopic moisture, and at a higher temperature gives off its combined water and a burnt smell. Before the blowpipe some varieties blacken, then burn white, and fuse with difficulty on the thin edges. With cobalt solution a pink color is developed on ignition. The mineral is decomposed by hydrochloric acid with gelatinization.

Sepiolite occurs in Asia Minor in masses in stratified earthy or alluvial deposits at the plains of Eskihi-sher, where, according to J. Lawrence Smith, it has proceeded from the decomposition of magnesium carbonate, which is imbedded in serpentine in the surrounding mountains. This view is supported by the fact that more or less magnesium carbonate is often found in the sepiolite. It occurs at several places in Greece, at Hrubschitz in Moravia, in Morocco, and at Vallecas in Spain, where there are extensive beds which are quarried for building stone. In the United States sepiolite has occasionally been met with in compact masses of smooth, earthy texture, as in the magnesia quarries at West Nottingham, Chester County, Pa. It also occurs in grayish and yellowish-white masses in the serpentine near Stamp's Tavern, at Concord, Delaware County, Pa. Specimens have also been found at Middleton, Pa., in the serpentine at New Rochelle, Westchester County, N. Y., in Utah, and at Webster, Jackson County, N. C., where it occurs as thin seams in serpentine. None of the American localities, however, furnish meerschaum in commercial quantities. The composition of the Turkish and Grecian meerschaum is shown in the following table:

Source.	SiO_2.	MgO.	FeO.	H_2O.	CO_2.	Total.
	Per Cent.	Per Cent.	Per Cent.	Per Cent.	Per Cent.	Per Cent.
Turkey.....	61.17	28.43	0.06	9.83	0.67	100.16
Greece......	61.30	28.39	0.08	9.74	0.57	100.07

The world's supply of meerschaum is derived from the vicinity of Eskihi-sher, in Asia Minor, where more than 10,000 men are said to be engaged in the industry. There are also said to be about 4,000 shafts in the district, some of them as deep as 60 m. There are no statistics as to the amount of the mineral produced, but it is certainly very considerable. Meerschaum is mined in smaller quantities at Negroponte and Thebes in Greece. Pure meerschaum when first mined as it exists in the deposits is a soft, brittle, pale gray mineral which on exposure to the air hardens into the white, light substance commonly known.

The chief use for meerschaum, as is well known, is in the manufacture of pipes for tobacco-smoking, a purpose for which the mineral is excellently adapted on account of its porous character.

MICA.

The production of sheet mica in the United States in 1897 was 92,335 lb., against 17,630 lb. in 1896; the production of ground mica, mica scrap, etc., was 2,692 short tons, against 570 short tons in 1896. The production of sheet mica in 1897 was made chiefly in New Hampshire, North Carolina, and South Dakota, the amounts credited to each State being respectively 6,500 lb., 74,835 lb., and 8,500 lb. New Hampshire produced 2,098 tons of ground mica, North Carolina and Virginia 554 tons, and South Dakota 30 tons. The sheet mica of New Hampshire was marketed in Boston; that of North Carolina came chiefly to New York, some going to Chicago, while the South Dakota product was divided between Chicago and St. Louis.

In general there was no material change in the mica business in 1897, prices remaining about the same as in the previous year, notwithstanding the increase of duty according to the new tariff law. The supply of mica for the United States, as well as for the rest of the world, continues to be derived chiefly from India and Canada. The production in the United States is summarized in the following table:

PRODUCTION OF MICA IN THE UNITED STATES.

State.	1896.				1897.			
	Sheet.		Ground.		Sheet.		Ground.	
	Pounds	Value.	Short Tons.	Value.	Pounds	Value.	Short Tons.	Value.
New Hampshire	4,000	$1,275	....	....	6,500	$1,980	2,098	$31,470
North Carolina and Virginia	3,130	2,783	560	$7,587	74,835	35,135	554	6,648
South Dakota	8,100	3,000	....	....	8,500	3,000	30	300
Other States	2,400	5,470	10	100	2,500	5,500	10	100
Totals	17,630	$12,528	570	$7,687	92,335	$45,615	2,692	$38,518

The New Hampshire mica was shipped from Bristol, Warren, Canaan, Grafton City, and Rumney. The North Carolina product was obtained from Shelby and the mountain towns back of Asheville and Marion. The South Dakota mines are situated on French Creek, six miles east of Custer City. New discoveries of mica were reported in Lincoln County, Nev., where a sample of 300 lb., cut in sizes ranging from 2×5 in. to 9×10 in., was shipped, and at Chelan Falls, in Okanogan County, Wash., whence a sample lot of about 700 lb. was taken out, though none of this would cut larger than 2¼×3 in. In Salt Lake County, Utah, two mines were opened, in one of which there is considerable mineral disclosed, though but few perfect sheets larger than 1 in. square could be obtained; it was proposed, however, to use the product in a paint factory recently established in Salt Lake City. Some mica deposits were also discovered near Bloomingdale, in Passaic County, N. J., and steps were taken to mine this mineral for paint manufacture, though there was no production in 1897.

Alabama.—Dr. E. A. Smith, in a pamphlet on the mineral resources of Alabama, described the deposits of mica which exist in the northwestern part of Randolph and the adjacent parts of Cleburne and Clay counties, where there are veins of coarse-grained granite, technically known as pegmatite, in which the constituents of granite, viz., quartz, mica, and feldspar, usually in small grains, assume gigantic proportions, often making masses a foot or more in size. From the mica bowlders, as they are termed, sheets of marketable size and quality may be obtained. In the vicinity of Pinetucky, and at Pinetucky itself, the veins have been pretty thoroughly tested, but the want of railroad facilities will for some time act as a bar to the profitable mining of this mineral. At many other places from Pinetucky toward the southwest as far as Chilton County, these coarse-grained granite veins have also been tested and are known to contain mica of good quality.

New Hampshire.—The output of ground and scrap mica in New Hampshire was shipped largely to Rhode Island for preparation for market. The value of this material at the mines varied from $5 to $15 per ton. The latter grade, after grinding, was converted into a product worth $60 per ton. A feature in mica mining in New Hampshire was the introduction of steam drills by Alfred J. Hoskins at Grafton Center, who demonstrated that with their aid mica could be produced 50% cheaper than with hand drilling.

Canada.—J. T. Donald reports that there was nothing new in the mica industry of Quebec in 1897, the only matter of interest being the launching of the Mica Mfg. Co., Ltd., of London, with an authorized capital of £80,000. This company was formed to acquire the Gerrard group of mines, comprising about 1,700 acres of land in Quebec and Ontario. These mines are situated near Ottawa, at which point the new company owns a well-equipped factory.

It is believed that the better times that are now thought to be coming will see a large demand for Canadian mica, which is still in high favor with the electricians. There are large stocks, however, that have accumulated during the three or four years just elapsed which must be worked off, after which there is no doubt that the mica-mining industry will be re-established on a firm business basis and will be more free from sudden variations in price.

China.—Since the Germans have taken possession of territory in China it is stated that vast untouched deposits of mica lie within 50 miles of Kiao-Chau Bay. The extent of these deposits is as yet unknown. The mica crops out at intervals over about 50 square miles, and in veins sometimes 10 ft. thick. Much of it is discolored by foreign minerals, but it is believed that there are considerable quantities of good commercial material.

India.—The better qualities of Indian mica are exported to England and the United States, while the lower grades are used locally for making small lamps for the marriage processions of the richer Hindus. White mica is rare in Behar, the best Indian mica being ruby-colored. Although mica mining is sometimes very unprofitable, on account of there being no certain surface indications of its presence, trading in it is said to be very lucrative. The mines at present of most importance are all situated in the districts of Hazaribagh and Gaya in Behar. The mineral is also found in certain parts of Manbheom, but all attempts to work these mines profitably have hitherto failed. The principal mines in the Hazaribagh district are Dumcho Gharanchi, Bochagta, Salboya, and Kodama. Most of the mines of this district are situated in the Koderma government estate, both inside and outside the government reserve forests, the rest being scattered through other parts of the pargana of Kharakdiha. There were 5,587 men employed in these mines in 1896 and 5,400 in 1895. In Gaya the mines worked are Singur, Vita, Chatkari, Bind, Govindpore, and Korarama. The government leases out land at a fixed rate of 50 rupees per acre, while private lands are leased by arrangement. When brought out, the mica yields easily separable layers, the uppermost of which are generally cracked, and therefore useless. The lower layers are sent to Calcutta, either in blocks or after being cut and sorted. The largest pieces are about 25 in. long and 5 in. wide. Unstained, good ruby-colored mica realizes as much as 800 rupees per maund (maund=80 lb.), but even higher prices have been reached. One specimen from Gaya sold last year for 1,600 rupees per maund. There is only one mine, Singur, in Bengal, which yields white mica, and this has been worked for 30 years. It is stated that mica trading would be even more profitable if the merchants, instead of buying in Calcutta, went directly to the mines to purchase.

Walter Coogan says* that the mica mines of Bengal are attracting more attention than ever before. In the Hazaribagh and Gaya districts the mica is very plentifully distributed. The productive mines are from 35 to 70 miles from the nearest railway. The country is dry and uninviting. The climate is healthful in the cold weather, but the rains generate malaria, and so perilous is life during two or three months of the year that most of the Europeans withdraw from the mines for that reason, and also because water floods the mines and renders them unworkable, except at a large and unprofitable expenditure. The mica tracts are extensive, and the presence of the mineral can be detected within clearly defined limits. In general, however, the belief prevails that it is to be found in the largest quantities in the high lands. Here the miner commences operations. Not much time is lost in discovering a "phook" or vent, or perhaps a small outcrop in quartz, and in an hour or two the chiselmen are a few feet down, taking up small refuse mica, and come upon what appear to be leaders to a vein of mica. A defined vein once found is followed up carefully. These are generally only a few feet in thickness and run in a very ill-defined course, winding in and out, and dipping downward and sideways, as the case may be. The adits made in the hills following these veins depend upon the thickness of the lead. Some mines have 15 to 20 ft. diameter holes; others, and most of them, just enough to allow of one to four or five pairs of coolies crowding down on their haunches and wielding their hammers. Where opportunities present themselves "lataps," or wooden lifts, are employed to remove the cuttings and waste; other-

---

* *Indian and Eastern Engineering*, 1897.

wise, as is generally the case, strings of women form in line, inside and along the tunnels, and the cuttings are passed along to the pit mouth in small baskets. The processes of mining are interesting. The harder rock having been removed, the chiselmen, who work in pairs, carve out the mica which is found in "books." The best mica is found in rock, which has protected it against percolation and earth movements. Where found in the softer soils its substance is weak, and its transparency sometimes partially or wholly destroyed by interlaminar inclusions or infiltrations of other mineral substances. Mica when found on the surface is soft and cracked. Clearer and better colored mineral is found lower down, and the harder and less diversified the rock formation the better is the mica in color and substance. The miners' tools consist of a drill for making blast holes, and a chisel and hammer for lighter work. The average wages of a coolie are 3 annas per day, and of a woman 6 pice. The mines in their full development go down to from 100 to 250 ft., one having been driven deeper. Every evening the output from each mine is put together in neat bundles, tied up with bark strippings, and taken to the manager's bungalow. The next day the cutters are at work, and the outturn is roughly trimmed with "huswas" or sickles. This trimming or cutting is done according to the requirements of the buyers. The product is then forwarded to the head depots, to be finished and packed for shipment.

EXPORTS OF MICA FROM INDIA. (*a*) (IN METRIC TONS AND RUPEES.)

Province from Which Exported	1890-91.		1891-92.		1892-93.		1893-94.		1894-95.		1895-96.	
	Tons.	Rupees.	Tons.	Rupees.	Tons.	Rupees.	Tons.	Rupees.	Tons.	Rupees.	Tons.	Rupees
Bengal..........	322.6	9,12,450	116.7	4,28,393	168.1	4,33,772	246	7,65,879	260.4	6,04,719	448.8	9,95,102
Bombay.........	1.7	575	1.4	314	0.9	511	0.25	120	0.5	879	3.9	2,829
Burma..........	....	....	....	....	0.05	65	0.30	700	0.3	712	0.05	220

Countries to Which Exported	1890-91.		1891-92.		1892-93.		1893-94.		1894-95.		1895-96.	
	Tons.	Rupees.	Tons.	Rupees.	Tons.	Rupees.	Tons.	Rupees.	Tons.	Rupees.	Tons.	Rupees
United Kingdom	165.0	4,48,864	41.6	1,18,932	70.5	2,40,952	132.0	5,28,514	154.4	2,78,185	176.1	4,56,942
France..........	0.4	785	0.5	1,340	....	....	1.3	8,150	1.0	5,050	0.2	1,000
Germany........	8.6	34,363	3.7	17,425	0.25	764	8.6	33,518	4.7	28,038	14.5	21,794
United States...	149.7	4,28,878	71.2	2,90,806	93.2	1,92,380	104.7	1,96,517	98.4	2,91,940	257.8	5,11,088
Other Countries	0.6	135	1.1	204	5.1	252	....	....	2.7	3,147	4.2	7,327
Totals.......	324.3	9,13,025	118.1	4,28,707	169.05	4,34,348	246.6	7,66,699	261.2	6,06,310	452.8	9,98,151

(*a*) From *Review of the Mineral Production in India for 1896*, by George Watt. Fiscal years ending March 31.

The estimated production in 1894 was 180 tons (1,45,388 rupees); in 1895 379.9 tons (3,16,614) and in 1896, 309.2 tons (3,42,470). The largest producers are F. F. Christein & Co. of Tisri, who operate 110 mines; W. R. MacDonald of Koderma, with 28 mines, and Babu Raj Krishna Sahana of Koderma, with 31 mines.

Besides Behar there is a considerable production of mica in the Nellore district of the Madras Presidency. Recently this has experienced a great extension. Up to 1895 mica was not an article of exportation from this district, although it was produced in small quantities for local consumption. During 1895 and the first six months of 1896 there were exported from these mines through the port of Madras 227,175 lb. of mica, valued at 113,587 rupees. In this valuation the mica was reckoned at 8 annas a pound, although a trial consignment of over 3,500 lb. realized an average price of 2s. 4d. The government levies a royalty of 5% on the value of the mica produced, in addition to which the lessee has to pay a surface rent of 1 rupee per acre and a dead rent at the same rate.

USES OF MICA.

Mica is used for many of the purposes for which talc is employed, but it differs from talc, inasmuch as it affords thinner folia, and is elastic, and has not the same greasy feel, besides being harder. Mica ground in a mill increases vastly in bulk, and forms a loose mass of scales, not unlike bran. In this form it is largely used in a mica powder as an absorbent of nitro-glycerine, its peculiar elasticity being claimed to make explosion by concussion unlikely, while it does not interfere with the power of the nitro-glycerine when exploded by a fulminate or similar device. Mica is also used in pulverized form for calico printing, and for decorating porcelain and glassware. When finely ground, mica has a slippery and greasy character, and makes a good lubricant for machinery. Scrap or refuse mica, which has hitherto been regarded as valueless, is now used as a most efficient covering for steam boilers and pipes, on account of its non-conducting quality. Mixed with varnish, mica is used as a coating for wall papers, and in bronzing statuettes and other plastic articles. It is also applied, colored or metallized, to interior decoration. From its unalterable nature it preserves the gilding, silvering or coloring from deterioration, and, from its diaphaneity, the articles so treated do not lose their original brilliancy. An important development in the mica industry is the increasing consumption of scrap or refuse mica. A new use for this material was described by C. H. Mitchell of Toronto, in a paper read last spring before the Ontario Mining Institute, who said:

"By taking the scrap or waste pieces and subdividing them as finely as possible and then quilting them between galvanized wire netting, it is possible to produce a fireproof mat, flexible and clean, and a non-conductor of heat. The finer the flakes the more effective they become, as each one in itself is an effective non-conductor, so that the greater number in a given space the higher the results are in checking the escape of heat waves. The mats or quilts are not only fireproof, but are flexible and elastic, which is a most valuable feature, as they will expand or contract with the iron they cover without cracking or flaking off.

"The use of these mats is recommended for covering boilers, to which they are secured by means of hooks attached to iron bands, which are passed around the boiler under the mats. Besides this covering for boilers, the waste mica is made into sectional covering for all sizes of steam and hot-water pipes, the only difference being that the mica is stitched between a wire core which fits the pipe and an outer covering of canvas. The sections are secured to the pipe by lacing around the boot-hooks, which are riveted up the seam at convenient distances. Coverings for all sizes and shapes of fittings, including elbows, tees, crosses, and globe valves, are also made and secured to the iron in the same way.

"These mats have been in constant use for nearly two years on locomotives, where there is probably heavier and more constant vibration than is found anywhere else, and at the end of this time have been found in perfect condition, and likely to last a number of years longer."

VALUE OF SHEET MICA.

The price list established for cut India and sheet mica in 1898 is as follows:

Size. Inches.	Price Per Pound.	Size. Inches.	Price Per Pound.	Size. Inches.	Price Per Pound.	Size. Inches.	Price Per Pound.	Size. Inches.	Price Per Pound.
1 × 4	$1.15	1¾ × 5	$2.00	2¼ × 7½	$5.25	3 × 3¼	$3.00	4 × 7	$9.50
1 × 4½	1.40	1¾ × 5½	2.40	2¼ × 8	5.75	3 × 3½	3.50	4 × 8	9.75
1 × 5	1.75	1¾ × 6	3.00	2¼ × 8½	6.50	3 × 3¾	4.00	4 × 9	10.00
1 × 5½	2.15	1¾ × 6½	3.50	2¼ × 9	7.00	3 × 4	5.00	4 × 10	11.00
1 × 6	2.65	1¾ × 7	4.50	2¼ × 9½	7.75	3 × 4¼	5.25	4 × 11	12.00
1 × 6½	3.25	1¾ × 7½	4.75	2¼ × 10	8.25	3 × 4½	6.00	4 × 12	13.00
1 × 7	4.25	1¾ × 8	5.00	2¼ × 11	8.75	3 × 4¾	6.50	4½ × 4½	7.50
1 × 7½	4.75	1¾ × 8½	5.75	2¼ × 12	9.75	3 × 5	7.00	4½ × 5	8.25
1 × 8	5.00	1¾ × 9	6.25	2½ × 2½	1.10	3 × 5½	7.50	4½ × 5½	8.75
1 × 8½	5.50	1¾ × 9½	7.00	2½ × 2¾	1.25	3 × 6	8.00	4½ × 6	9.25
1 × 9	6.00	1¾ × 10	7.50	2½ × 3	1.50	3 × 6½	8.25	4½ × 6½	9.50
1 × 10	7.25	1¾ × 11	8.25	2½ × 3¼	1.60	3 × 7	8.50	4½ × 7	9.75
1¼ × 4	1.15	1¾ × 12	9.25	2½ × 3½	1.75	3 × 8	8.75	4½ × 8	10.00
1¼ × 4½	1.40	2 × 2	.85	2½ × 3¾	1.85	3 × 9	9.00	4½ × 9	10.25
1¼ × 5	1.75	2 × 2¼	.85	2½ × 4	2.00	3 × 10	10.50	4½ × 10	11.25
1¼ × 5½	2.15	2 × 2½	.90	2½ × 4¼	2.25	3 × 11	12.00	4½ × 11	12.00
1¼ × 6	2.65	2 × 2¾	.95	2½ × 4½	2.75	3 × 12	12.50	4½ × 12	13.00
1¼ × 6½	3.25	2 × 3	1.00	2½ × 4¾	3.25	3¼ × 3¼	3.50	5 × 5	8.50
1¼ × 7	4.25	2 × 3¼	1.05	2½ × 5	3.75	3¼ × 3½	4.00	5 × 5½	9.00
1¼ × 7½	4.75	2 × 3½	1.15	2½ × 5¼	3.85	3¼ × 3¾	4.50	5 × 6	9.50
1¼ × 8	5.00	2 × 3¾	1.25	2½ × 5½	4.00	3¼ × 4	5.25	5 × 6½	9.75
1¼ × 8½	5.50	2 × 4	1.45	2½ × 6	4.50	3¼ × 4¼	5.50	5 × 7	10.00
1¼ × 9	6.00	2 × 4¼	1.50	2½ × 6½	4.75	3¼ × 4½	6.00	5 × 8	10.25
1¼ × 10	7.25	2 × 4½	1.65	2½ × 7	5.25	3¼ × 4¾	6.50	5 × 9	10.50
1½ × 2	.85	2 × 4¾	1.75	2½ × 7½	5.50	3¼ × 5	7.25	5 × 10	11.00
1½ × 2¼	.85	2 × 5	2.00	2½ × 8	5.75	3¼ × 5¼	7.50	5 × 11	12.00
1½ × 2½	.85	2 × 5½	2.65	2½ × 8½	6.75	3¼ × 5½	7.75	5 × 12	13.50
1½ × 2¾	.85	2 × 6	3.25	2½ × 9	7.25	3¼ × 6	8.50	5½ × 5½	9.25
1½ × 3	.85	2 × 6½	3.75	2½ × 9½	7.75	3¼ × 7	8.75	5½ × 6	9.75
1½ × 3¼	.90	2 × 7	4.75	2½ × 10	8.25	3¼ × 8	9.00	5½ × 7	10.25
1½ × 3½	.95	2 × 7½	5.00	2½ × 11	9.00	3¼ × 9	9.50	5½ × 8	10.50
1½ × 3¾	1.00	2 × 8	5.25	2½ × 12	10.25	3¼ × 10	10.50	5½ × 9	10.75
1½ × 4	1.15	2 × 8½	6.00	2¾ × 2¾	1.50	3¼ × 11	12.00	5½ × 10	11.50
1½ × 4¼	1.25	2 × 9	6.50	2¾ × 3	2.00	3¼ × 12	12.50	5½ × 11	12.00
1½ × 4½	1.40	2 × 9½	7.25	2¾ × 3¼	2.25	3½ × 3½	4.50	5½ × 12	13.50
1½ × 5	1.75	2 × 10	7.75	2¾ × 3½	2.50	3½ × 3¾	5.00	6 × 6	10.00
1½ × 5½	2.15	2 × 11	8.50	2¾ × 3¾	2.75	3½ × 4	6.00	6 × 6½	10.25
1½ × 6	2.65	2 × 12	9.50	2¾ × 4	3.25	3½ × 4¼	6.25	6 × 7	10.50
1½ × 6½	3.25	2¼ × 2¼	.85	2¾ × 4¼	3.50	3½ × 4½	6.50	6 × 8	10.75
1½ × 7	4.25	2¼ × 2½	.90	2¾ × 4½	4.00	3½ × 4¾	7.00	6 × 9	11.00
1½ × 7½	4.75	2¼ × 2¾	.95	2¾ × 4¾	4.50	3½ × 5	7.50	6 × 10	11.50
1½ × 8	5.00	2¼ × 3	1.25	2¾ × 5	5.25	3½ × 5½	8.25	6 × 11	12.00
1½ × 8½	5.50	2¼ × 3¼	1.40	2¾ × 5¼	5.50	3½ × 6	8.75	1 × 12	14.00
1½ × 9	6.00	2¼ × 3½	1.55	2¾ × 5½	5.75	3½ × 6½	8.75	7 × 7	10.75
1½ × 9½	6.75	2¼ × 3¾	1.70	2¾ × 6	6.25	3½ × 7	9.00	7 × 7½	10.75
1½ × 10	7.25	2¼ × 4	1.85	2¾ × 6½	6.50	3½ × 8	9.25	7 × 8	11.00
1½ × 11	8.00	2¼ × 4¼	2.00	2¾ × 7	7.00	3½ × 9	9.50	7 × 9	11.25
1½ × 12	9.00	2¼ × 4½	2.25	2¾ × 7½	7.50	3½ × 10	10.75	7 × 10	12.00
1¾ × 3	.95	2¼ × 4¾	2.50	2¾ × 8	8.00	3½ × 11	12.00	7 × 11	12.50
1¾ × 3¼	1.00	2¼ × 5	3.00	2¾ × 8½	9.00	3½ × 12	13.00	8 × 8	12.00
1¾ × 3½	1.10	2¼ × 5¼	3.10	2¾ × 9	9.25	4 × 4	7.00	8 × 9	12.50
1¾ × 3¾	1.25	2¼ × 5½	3.25	2¾ × 9½	9.75	4 × 4½	7.25	8 × 10	13.00
1¾ × 4	1.35	2¼ × 6	3.65	2¾ × 10	10.25	4 × 5	7.75		
1¾ × 4¼	1.40	2¼ × 6¼	3.90	2¾ × 11	11.25	4 × 5½	8.50	All larger, special prices.	
1¾ × 4½	1.50	2¼ × 6½	4.15	2¾ × 12	11.75	4 × 6	9.00		
1¾ × 4¾	1.65	2¼ × 7	5.00	3 × 3	2.75	4 × 6½	9.25		

From the above list there is a discount of 50, and 10, and 5%. The prices show a considerable advance over those of 1897 on the most important commercial sizes. Trimmed mica which will cut to assorted sizes is quoted as follows (without discount):

Width.	Length.	Per Lb.	Width.	Length.	Per Lb.
4" to 8"	8" to 10"	$2.50	2" to 3½"	4" to 6"	$0.50
3" to 6"	6" to 9"	1.75	1" to 3"	2½" to 4"	.30
2" to 4"	5" to 8"	1.00			

MINERAL PAINTS.

THE most important substances of mineral production which are used in the United States as pigments are iron oxide (commonly known as metallic paint), ocher, umber and sienna, venetian red, graphite, asphaltum, white and red lead, etc., zinc oxide, barytes and magnesia. A statistical investigation of this subject is laden with a good deal of difficulty, first as to classification, and second as to the stage of the product, it being beyond the scope of this volume to follow articles of mineral production beyond the first or second processes in their preparation for utilization in the arts. We have referred to barytes, asphaltum, graphite and zinc oxide under the respective captions elsewhere in this volume. Admitting the inconsistency of treating only a portion of the substances in this place under the caption "Mineral Paint," we have confined ourselves to the pigments which owe their color to iron, merely summarizing in the subjoined table the production of the other mineral pigments:

PRODUCTION OF MINERAL PAINTS IN THE UNITED STATES.

(In tons of 2,000 lb.)

Pigment.	1896.			1897.		
	Tons.	Total.	Value pr. ton.	Tons.	Total.	Value pr. ton.
Iron oxide, natural	31,865	342,167	$10.74	36,293	370,594	$10.21
Ocher	16,726	157,198	9.40	10,326	94,125	9.11
Umber and sienna	1,109	21,600	19.48	825	16,040	19.44
Venetian red	5,998	93,586	15.60	4,596	55,690	12.11
White and red lead	95,955	7,868,310	82.00	103,235	9,291,150	90.00
Zinc oxide	15,863	1,189,725	75.00	26,262	2,100,960	80.00
Barytes	21,900	219,000	10.00	27,316	300,476	11.00

The iron pigments are divided commercially into four classes, namely, metallic paint, so called, which is essentially a natural oxide of iron; ocher, umber and sienna, which are earths or clays containing a more or less amount of iron oxide which gives them their brown, yellow or red color; venetian red, which is an artificial product made by calcining copperas with admixture of lime; and Indian red which is an artificial pigment produced by the calcination of copperas alone. Probably there is no sharp dividing line between metallic paint and ocher, but in general it may be assumed that the former is iron oxide with only a small proportion of impurities, while in the latter the iron content is comparatively low.

The metallic paint production of the United States is made chiefly in Pennsylvania, New York, and Tennessee, these States furnishing nearly two-thirds of the output in 1897. The mineral is also produced in Georgia, Illinois, Maryland, Missouri, Ohio, and California. Ocher is produced in Arkansas, California, Georgia, Kansas, Missouri, New York, Pennsylvania, and Vermont, Pennsylvania contributing rather more than 50% of the whole output. The production of umber and sienna, which we classify with ocher, is also derived from Pennsylvania. The amount of these substances is very small, however, having been only 825 short tons ($16,040) in 1897 against 1,109 short tons ($21,600) in the previous year.

The production of venetian red is made entirely from copperas, which is derived as a by-product from the pickling liquors of iron and steel sheet and wire works. The copperas is calcined in a suitable furnace with admixture of lime, enough of the latter being added to take up the sulphuric acid of the sulphate of iron. Ordinarily venetian red contains about 38% of ferric oxide, the remainder being calcium sulphate. In our statistics of venetian red we have included Indian red, which is pure artificial oxide of iron, made by calcining copperas, the shade varying according to the heat at which the calcination is performed, within rather narrow limits.

MOLYBDENUM.

Molybdenum, which we have classed heretofore as one of the rare elements, has already obtained some commercial importance, certain molybdenum alloys being regularly on the market, and consequently it can no longer properly be called "rare." The only ore of molybdenum worthy of mention at the present time is molybdenite, which is the sulphide of molybdenum represented by the symbol MoS_2, containing 60% of molybdenum and 40% of sulphur. It is a soft, sectile mineral of 1 to 1.5 hardness and 4.7 to 4.8 sp. gr. In color it is a pure lead-gray. It gives a bluish-gray streak on white paper and a slightly greenish streak on porcelain. In general appearance it is often mistaken for graphite, but it is distinguishable from the latter by its streak, that of graphite being black.

When subjected to blowpipe tests, of course there can be no question as to the identity of molybdenite, since it gives off in the open tube sulphurous fumes and a pale yellow crystalline sublimate of molybdenum trioxide, MoO_3. In the platinum forceps before the blowpipe it is infusible, imparting a yellowish green color to the flame. On charcoal the pulverized mineral gives in the oxidizing flame a strong odor of sulphurous acid, and coats the coal with crystals of molybdic oxide which are yellow while hot, and white after cooling, the cold white coating assuming a beautiful azure blue color if touched intermittently with the reducing flame. Molybdenite is decomposed by nitric acid, leaving a white or grayish residue of molybdic oxide. Graphite gives none of these reactions.

Molybdenite generally occurs in veins of granite or gneiss, or disseminated through those rocks. Its occurrences are numerous. In the United States Dana mentions Blue Hill Bay, Candage Farm, Brunswick, Bowdoinham, and Sanford, Me., Haddam and Saybrook, Conn., Newport, Vt., Westmoreland, Llandaff, and Franconia, N. H., Shutesbury and Brimfield, Mass., Warwick, N. Y., Chester, Pa., and several other localities. Elwyn Waller is authority for the statement that there are workable deposits of the mineral in the mountains of Virginia, and in the Adirondack region of New York. Possibly certain of the veins at Blue Hill, Me., may also be capable of exploitation; indeed, it has been reported that an opening is to be made on one of them. Promising veins of molybdenite also occur about four miles north of Pitkin, near Rock Creek, in Gunnison County, Colo. In brief, there is no question but that there is an abundant supply of molybdenum ore as soon as it may be needed. At the present time the demand for it is very small, and is chiefly supplied by a mine in Sweden, which produces a very pure mineral.

Molybdenum (atomic weight 95.9) is a white metal of 9.01 sp. gr., which has a silvery luster and is as malleable as iron; like the latter it can be welded, filed, and polished with ease, and takes up carbon by cementation. The first process employed commercially in its preparation consisted in the reduction by carbon of molybdate of lime, the latter being easily obtained pure. After the reduction the lime was separated from the metallic molybdenum, by treatment with chlorhydric acid. The molybdenum thus prepared contained about 3% of carbon. This process was introduced in 1892 by Sternberg & Deutsch, at their chemical works at Grunau, near Berlin, where they were able to produce as much as 200 kg. of metal per day, and sell it at \$1.90 per kg., or 86.5c. per lb. Since that time Moissan has prepared pure molybdenum by igniting ammonium molybdate, and reducing with carbon the molybdenum dioxide thereby obtained, the oxide and carbon being mixed in the proportion 10 to 1, and the reaction effected in the electric furnace. Properly prepared the metal can be obtained free from carbon, while metal contaminated with carbon can be refined by heating with molybdic oxide at a temperature far below its point of fusion. For further details as to the preparation and properties of molybdenum and some of its important compounds the reader is referred to THE MINERAL INDUSTRY, Vols. II., III., IV. and V., under the caption "The Rare Elements."

The experiments with metallic molybdenum have been chiefly in the direction of its effect on steel; while there is nothing especially new in this idea (see THE MINERAL INDUSTRY, Vol. II.), it has lately been possible to study its action more intelligently, owing to the ability to secure metal free from carbon, sulphur, etc. Tests recently made on molybdenum steel by Prof. W. von Lipin of St. Petersburg show that it resembles tungsten steel in a general way, although it is less affected by annealing and tempering. Annealing makes it softer than tungsten steel; high heating, on the other hand, makes it harder than the latter. This steel can stand treatment in the fire as well as tempering better than tungsten steel, and shows no fissures where tungsten steel very often does. This may be the cause for the numerous attempts to substitute molybdenum steel for tungsten steel, and especially chromo-tungsten steel.

The investigations begun by H. Moissan in France, and continued by his associates, have shown that a metal free from sulphur can be obtained readily from molybdenite by the use of the electric furnace. This freedom from sulphur is a point which has heretofore been difficult to secure, and the presence of the objectionable element has interfered with the more extended use of this particular steel alloy. In some recent experiments carried on by M. Guichard, and reported by him in *Comptes Rendus*, the molybdenite used was from Sweden, and contained about Mo, 60%; S, 39%; Fe, 0.75%; and Si, 0.40%. Heated in the electric furnace in a carbon tube with an arc of 350 ampères and 60 volts, S and SO_2 were disengaged, and there were traces of fusion. With a current of 900 to 950 ampères and 50 to 55 volts complete fusion was obtained in a very short time, and the sulphur was entirely expelled. The metal obtained from the furnace showed Mo, 91.5%; Fe, 2.1%; total carbon, 6.6 to 7.2%, about one-sixth of the carbon being graphite. It is thus proved that the metal can be obtained in a convenient and desirable form by a comparatively simple process, using the heat of the electric arc.*

---

* *Engineering*, LXIII., 1897, p. 371.

MONAZITE.

BY L. M. DENNIS.

THERE was no monazite mined in either North or South Carolina in 1897. Producers report a few orders for mineral on hand, which will be shipped early in 1898. A new discovery of monazite in Rabun County, Ga., was reported, and its occurrence in connection with gold in the streams of the Idaho Basin, about 30 miles north-northeast of Boise City, Idaho, was described. The American monazite industry may now be regarded as defunct, however, owing to the competition of Brazil, where there are vast deposits of sand (averaging 90% monazite) on certain beaches, which, it is said, can be delivered in Europe at 2c. per lb.

H. B. C. Nitze,* describing the mining of monazite in North and South Carolina, says the sand was washed in sluice-boxes as in placer gold working. The lighter constituents were floated off, leaving the concentrated monazite in the boxes. From 40 to 70 lb. of cleaned monazite per box was considered a good day's work. It is impossible to completely eliminate such minerals as zircon, rutile, garnet, and ilmenite, and a washed sand containing 65 to 70% monazite was considered of good quality.

Concerning the occurrence of monazite in Idaho, W. Lindgren† states that the Idaho Basin is 30 miles north-northeast of Boise City, Idaho, in the granite area. Its placer mines have been of extraordinary richness and are still worked with success. The sand of the gravels and lake beds of this basin is entirely derived from the granite and associated dike rocks, and consists of relatively angular and sharp-edged grains, indicating its manner of formation by extremely rapid accumulation from the deeply disintegrated rocks. In all parts of the basin a yellow or brownish-yellow mineral forms a considerable quantity of the heavy substances remaining with the gold. This mineral has been shown to be monazite, being the first occurrence noted in the Western States. As is well known, it occurs abundantly in the granite and gneissoid rocks and gold placer mines of the Southern Appalachians, and in several of the northern Atlantic States. There is no doubt it forms an original constituent of the granite of the Idaho Basin.

A sample washed from the lake beds near Idaho City consisted of the follow-

---

* *Journal of the Franklin Institute*, Vol. CXLIV., p. 127.

† *American Journal of Science.*

ing minerals: Ilmenite in sharp hexagonal crystals, but no magnetite; zircon, also in extremely sharp crystals of a slightly brownish color; and abundant yellow or greenish-yellow grains, rarely showing crystallographic faces; the refraction and double refraction of this mineral were very high, the hardness not much over 5. The ilmenite was eliminated by the electro-magnet and the remaining powder, containing about 70% of the yellow mineral, was analyzed by Dr. W. F. Hillebrand. The result showed it to be a phosphate of the cerium metals, the approximate amount of the oxides of the latter being 48%; in these approximately 1.2% of thoria was found. This result identifies the mineral with monazite, the other similar mineral being xenotime, which is mainly a phosphate of yttrium with but little cerium.

Another sample furnished by T. Smith of Placerville came from the alluvial gold washings in Wolf Creek, near that town. Cleaned from quartz, etc., it appeared as a heavy, dark sand, consisting of a black iron ore (ilmenite), rounded crystals of red garnet, sharp crystals of zircon, and irregular grains of a dark yellowish-brown mineral with waxy luster, sometimes showing crystallographic faces. It was found possible to extract only a small part of the iron ore by the magnet; there was practically no magnetite present. This sand was examined by Dr. Hillebrand qualitatively with the result of finding phosphoric acid, cerium metals, and thorium. The yellowish-brown mineral is therefore in all probability monazite.

Although the monazite occurs in considerable quantity, it is doubtful whether the mineral can be profitably extracted, except possibly as a by-product obtained from the gold washings.

The Norwegian minerals thorite and orangite contain a minimum of 20% of thoria, and their price is about $1.50 to $2 per kg. per unit of thoria. Monazite is now the chief source of thoria, and being found in large quantities the price of pure ThO_2 has come down from $240 to about $36 per lb. A few months ago the consuls of the United States were directed to report upon the trade in monazite, and the following is an abstract of their reports:

Monazite is a phosphate of cerium and lanthanum, containing small quantities of didymium and thorium; but the thorium is the valuable constituent, as it is used in the manufacture of incandescent mantles. The sp. gr. of the mineral is 4.9 to 5.3, and it varies in color from yellow to brownish-gray. It occurs in North America (in North and South Carolina, Quebec, and Connecticut), Brazil, Russia, and in Tasmania. In North America the larger crystals of monazite are picked up by hand, but the sand is washed with water, as in the treatment of auriferous sands, yielding a product containing the monazite and particles of magnetite, ilmenite, garnet, and other impurities. After drying, the magnetite (but not the ilmenite) is removed with magnets. The sand then contains from 50 to 60% of monazite, and is sold at 25 to 30c. per lb. The pure monazite crystals are worth 50 to 60c. per lb. The Brazilian sand is found at Antigua, Bahia, Minas Geraes, Caravellas, and San Pedro, and is loaded directly into the ships, the cost amounting merely to that of the labor. In other districts —at the diamond mines of Rio Chico, Villa Bella, Guyaba, and Goyaz—it is found as rounded nodules specked with orangite. The following table shows the amount of rare earths in average samples of the well-washed mineral:

District.	ThO_2.	Oxides of the Cerium Group.	Oxides of the Yttrium Group.	District.	ThO_2.	Oxides of the Cerium Group.	Oxides of the Yttrium Group.
	Per Cent.	Per Cent.	Per Cent.		Per Cent.	Per Cent.	Per Cent.
Quebec	1.10	50.2	4.5	Minas Geraes	2.40	51.0	2.2
Connecticut	1.40	61.0	....	Rio Chico	4.30	53.0	3.2
North and South Carolina	0.28–0.30	39.0–63.3	0.1	Villa Bella	5.30	62.4	4.4
Bahia	1.20	33.0	1.2	Goyaz	7.60	64.1	5.1

The price of monazite in the first shipments from Brazil was quoted at $425 per ton, but last winter it had fallen to $60 per ton. The supply now exceeds the demand. Most of it is used at Vienna in manufacturing incandescent mantles.*

O. Boudouard, in a brief article† upon North Carolina monazite, gives his method for analyzing the mineral, together with the results of one of his analyses. The method which he describes is, however, of such very doubtful accuracy that but slight reliance can be placed upon his results, which here follow: SiO_2, 9.56%; TiO_2, 6.63%; P_2O_5, 39.48%; ThO_2, 2.42%; ZrO_2, 5.75%; CeO_2, 12.50%; Di_2O_3 and La_2O_3, 8.07%; M_2O_3, 0.48%; Fe_2O_3 and Al_2O_3, 9.85%; Gl_2O_3, traces; MgO, 3.74%; CaO, traces; gas, 0.20%; insoluble residue, 1.55%—total, 100.23%.

"Incandescent Gas Lights and the Substances used in Them," were discussed by L. Wenghöffer,‡ who says that although Auer von Welsbach is not really the discoverer of the incandescent gas light he has done the world the great service of creating the incandescent light industry and bringing it to its present great industrial importance. The patents taken out by Welsbach leave one in doubt as to what substances are employed in the modern light, and especially as to the proportions in which the various earths are used. By following out the specifications of these patents Wenghöffer has convinced himself that the details and formulæ given therein will not yield a light which can compete with the modern light. The substances used to-day are thorium and cerium oxides, and the proportions of these two earths can be varied only within narrow limits. The oxides of zirconium, lanthanum, and erbium, which are so frequently used, have no appreciable effect upon the light. Russium nitrate, which has been recommended as a substitute for cerium, was found upon examination to be a mixture of thorium with much cerium nitrate. Another sample of russium oxide, from a different source, proved to be a mixture of cerium nitrate and ammonium nitrate. The so-called lucium oxide is, according to Crookes, impure yttria.§ A sample of the mineral æschynite from the Oural Mountains was found to contain about 14% of thorium oxide, but it proved to be so difficult to work that all idea of using it on a large scale had to be abandoned.

The monazite sand used as a source of thorium nitrate is generally decomposed by sulphuric acid, the sand being added to the heated acid. The thorium sulphate is changed into the oxalate, which can then be separated from the other earths by ammonium oxalate, and afterward transformed into the nitrate. Thorium nitrate should contain from 48 to 50% of thorium oxide (ThO_2), should be free from alkalies, contain only traces of iron, and swell up considerably when

---

* *Rev. Chim. Ind.*, VII. (84), p. 372. † *Bull. de la Société Chim. de Paris*, Third Series, Vol. XIX., p. 10.

‡ *Chemisches Central-Blatt*, 1897, p. 1118. § THE MINERAL INDUSTRY, Vol. V., p. 480.

heated in a crucible; for only such a nitrate will form a soft, elastic, and durable mantle. When rubbed upon the back of the hand the ash of the nitrate must be "impalpable." The "mantle experiment" is considered to be of great value in judging of the quality of the nitrate; a mantle prepared from pure thorium nitrate without the addition of any other earth should show slight luminosity and a characteristic pale-blue color. If, on the contrary, the mantle is bright and of a white color, the thorium nitrate has not been successfully purified. Enghöffer places more reliance upon this test than upon the chemical examination.

The consumption of thorium nitrate has greatly increased in recent years. In 1896 the firm of J. D. Riedel in Berlin supplied several thousand kilograms of the nitrate, an amount sufficient to prepare several million mantles. Toward the end of 1894 and early in 1895 thorium nitrate cost $480 per kg., while to-day the price of the first quality is from $16.80 to $19.20 per kg. This reduction in price has resulted from the sharp competition. No shortage in the supply of nitrate will occur in many years to come. Cerium nitrate is made exclusively from the residues of the thorium manufacture, which contain the oxalates of cerium, lanthanum, and didymium. In testing the cerium nitrate as to its suitability for lighting purposes, it is sufficient to ignite the salt in a platinum dish; it should leave a residue which when cold is of a light canary-yellow color. The price of cerium nitrate has lately remained quite constant at $48 per kg.

The "dipping fluid" used in the manufacture of the mantle is, according to Fresenius, an aqueous solution of thorium nitrate and cerium nitrate in the proportion of about 99 to 1. If the cerium nitrate be reduced to much below 1% the light becomes whiter but less diffusive, while with cerium much above 1% the light becomes yellow and loses in intensity. Most of the manufacturers dip the mantles in a 30% solution of the nitrate.

Lewes states that the oxides from which incandescent mantles are made do not produce a very great illuminating effect when used alone, the illuminating value of mantles made thus, per cubic foot of gas, being as follows: Commercial thoria, 6.0; pure thoria, 1.0; commerçial zirconia, 3.1; pure zirconia, 1.5; ceria, 0.9; yttria, 5.2; lanthana, 6.0; commercial erbia, 1.7; pure erbia, 0.6; alumina, 0.6; chromium oxide, 0.4; barium oxide, 3.3; strontia, 5.5; magnesia, 5.0. Ceria gives a reddish-yellow light; erbia, zirconia, and barium oxide a yellow light; alumina a whitish-yellow; and strontia and magnesia a white light. Although neither thoria nor ceria, when pure, have any particular power of emitting light, yet if 1.2% of ceria be mixed with the thoria, the mixed oxides emit a light 14 to 16 times greater than either of the substances used, while on increasing the amount of ceria the luminosity gradually diminishes until, with equal weights of the two, the light emited is in proportion to the illuminating power of the constituents.

Lewes' opinion with regard to the injurious effect upon the eyesight of artificial illuminants is that the best light is one essentially different from ordinary daylight, and as free as possible from the actinic rays present in sunlight. Crookes states, as a conclusion from a series of experiments, that the injurious effect of artificial lights on the eye being principally attributable to the invisible ultra-violet radiation, the cold greenish-blue Welsbach light may be considered to be 2.5 times as harmful as the warm pinkish-yellow light of the "sunlight" mantle.*

C. Killing† gives the results of experiments which he has made to ascertain the effect of each of the various substances used in the preparation of the mantles for the incandescent light. He finds that only those elements which form two or more oxides act as light producers when placed in or upon the thorium oxide net which forms the mantle. In the case of the Welsbach mantle (98.75% thorium oxide and 1.25% cerium oxide) the illuminating power was the same, whether the mantle was impregnated with a mixture of the two oxides or was dipped first into the thorium and then into the cerium. In other words the so-called "molecular mixture" of the oxides is not necessary, as had been previously supposed, to the production of a brilliant light. When the cerium oxide in the above mixture was replaced by an equal, or greater or less amount of either yttrium oxide or erbium oxide, the mantle showed no greater luminosity than if it contained thorium alone. But if uranium oxide be employed in place of the cerium (99.75% thorium oxide and 0.25% uranyl nitrate) the mantle shows an illuminating power almost equal to that of the thorium-cerium mixture. If the amount of uranium be increased, the luminosity falls; with 1% of the uranium the mantle is worthless. A mantle containing 99.96% thorium oxide and 0.04% platinum possessed an illuminating power 10 times greater than that of pure thorium oxide. The light was yellow. A similar mantle containing iridium in place of the platinum glowed still more brightly and gave a white light. It was also more permanent because of the lower volatility of the iridium. Gold, osmium, palladium, rhodium, and ruthenium, all of them elements forming several oxides, act in a similar manner, the osmium and palladium, however, lasting but a short time because of their volatility. The fact that high luminosity is produced by the addition of such exceedingly small amounts of these metals (for example, 0.00025 g. of platinum in a mantle) shows that their action cannot be due to the formation of a chemical compound in the mantle. It must rather be ascribed to a very active transference of oxygen, the result of which is to heat to incandescence the bodies in the immediate neighborhood of the catalytically-acting substance. In the incandescent light a part of the heat is transformed into light, as is shown by the fact that a unit volume of water is heated by the non-luminous gas flame, containing no mantle, to 21.9, while when a thorium mantle is introduced it is heated to only 19.7. With a thorium-cerium mantle the rise of temperature of the water is still less, being only 16.2. The oxides of cerium, iron, cobalt, manganese, molybdenum, nickel, vanadium, tungsten, etc., would also show similar catalytic action, but only those oxides can be used which are difficultly volatile at the high temperature of the glowing mantle. A mantle containing 0.6 g. of thorium oxide and 0.0009 g. chromium oxide glowed brilliantly at the beginning, but in a quarter of an hour the chromium had volatilized and only the weak light due to the thorium was then visible. The especial value of cerium, among the many catalytic oxides which might be used in the mantle, is due to its very slight volatility, while the importance of the thorium is to be ascribed to the large amount of surface

---

* *Jour. Soc. Arts*, 1897. Vol. XLV., p. 101.

† *Jour. für Gasbeleuchtung*, Vol. XXXIX., p. 697.

which it exposes to the flame, and to its low specific heat. Were it not for these facts it would be immaterial whether the mantle consisted of thorium oxide or of several oxides, as for example 70% zirconium oxide and 30% lime.

Refractory threads for incandescent gas-burners are described as follows:* A 50% solution of thorium oxychloride in alcohol is mixed with a 3–20% solution of nitrocellulose in alcohol-ether if the thread is to be spun under water, or with a 20% solution if it is to be spun under pressure in the air. The oxychloride may be spun when mixed with one-fourth part of nitrocellulose. The proportion of alcohol must exceed that of ether in a homogeneous solution, because either precipitates ThO_2 or a basic salt. The spinning is effected with either a weak or a strong solution. In the former case the solution is passed through glass tubes with capillary openings immersed in water, the solution being drawn by clockwork or otherwise through the water in which the alcohol and ether dissolve; the thread is then dried in the air. In the latter case the solution—consisting of 20% of nitrocellulose and 80% of thorium oxychloride, with 0.75% of cerium oxychloride, dissolved in ether and alcohol—is passed under pressure into the open air. The threads are finally decomposed by heating in a closed vessel or in the open air at a low temperature, whereby the nitrocellulose is burned and the salts are broken up into oxyhydrates, which are then converted into oxides by means of a Bunsen burner. The threads may be denitrated by means of ammonium hydrosulphide if preferred. By using a salt that may be metallized, in place of thorium compounds, threads for incandescent electric lamp filaments may be made in the same manner.

Two other patents of a similar nature are those of Langhams and De Mare. In the first the claims are for the manufacture of incandescent media composed of zirconia with about 1% of vanadium pentoxide. Mantles may be made in the ordinary way by impregnating a fabric with an aqueous solution of zirconium and vanadium salts, and then burning off; or a zirconia body may be first made, then impregnated with an aqueous vanadium solution and calcined. A paste may be made by impregnating zirconia with an aqueous vanadium solution, and the bodies made from this paste are then dried and calcined in a Bunsen flame. De Mare forms the improved filament of a vegetable fiber or thread impregnated with an aqueous solution of an organic salt of one or more of the rare earths, the object being to obtain a mixture of carbon and the oxide of the rare earth, the latter acting as the irradiating substance, and the former as the conductor of electricity. The solution preferably employed is one of the citrates obtained by precipitating with ammonium citrate a solution composed of thorium nitrate and cerium nitrate, the proportions being 99% of the oxide of the former and 1% of the oxide of the latter. The carbonized filament is soaked a second time in the solution, and then dried and annealed electrically. Instead of the soaking, a mixing process may be employed in which the organic salt is mixed with the vegetable substance before it is drawn into a filament, the latter being then soaked several times in the solution of the salt, and annealed as before.

Bernhard Kosmann has patented the following process of separating thorium from minerals: After separating the greater part of the didymium group as

---

* *Jour. Soc. Chem. Ind.*, Vol. XVI., p. 603.

sulphates from the other constituents of the mineral, the thorium is separated from the lanthanum, didymium, and cerium by precipitation by adding, one after another, hydrogen peroxide, acid ammonium citrate solution and ammonia. Aluminum phosphate and thorium hydroxide are thrown down. These are then separated by means either of oxalic acid or of ammonia and acetic acid.

Kosmann also claims[*] the discovery of a new earth, which he calls "oxide of kosmium," in the cerium and didymium salts obtained from the crude liquor resulting from the solution of monazite sand. "The process of obtaining the new earthy oxide ('kosmia') from monazite sand and other cerite minerals consists in first fractionally precipitating the hydrates of cerium, didymium, and lanthanum by adding peroxide of hydrogen and ammonia so that the solution retains an acid reaction, then treating the filtered-off solution with the same reagents, but adding so much ammonia that the solution becomes alkaline, separating the precipitate thus obtained from the liquor, dissolving the precipitate in nitric acid, treating this solution in the hot state with oxalic acid, washing the precipitate with hot acidulated water, decomposing the washed oxalate by heat, dissolving the residue in nitric acid, treating this solution with hydrogen peroxide and ammonia, so that the solution retains an acid reaction, separating the precipitate from the liquor, and adding ammonia in excess, whereby the hydrate of the new earthy oxide is obtained as a whitish precipitate." The use of the earthy oxide in incandescent lighting is also claimed.

J. C. J. Steinbach has patented certain improvements in mantles for incandescent lighting.[†] Mantles composed of 99 parts of thoria and one part of ceria are said to give the maximum illuminating power obtainable from these two oxides, and if the ceria be increased to, say, 4%, the light is yellowish, and of much less illuminating power. According to the patentee, on adding 25% of silicic acid to a mixture of 96 parts of thoria and 4 parts of ceria, "the color of a light emitted from a mantle made of said mixture is no longer a pronounced yellow, but is pure white, and its illuminating power is even greater than that of a mantle composed of 99 parts of thorium oxide and one part of cerium oxide." Nevertheless, "as a rule, with the presence of silicic acid, the percentage of cerium oxide in proportion to the thorium oxide, in order to obtain the most favorable illuminating effect, must not be appreciably greater than is the case with mantles or the like which are composed solely of thorium oxide and cerium oxide." The first claim is for "a mantle composed of thorium and cerium oxide characterized by a percentage of silicic acid."

J. F. Duke has taken out an interesting patent upon "Self-Lighting Mantles."[‡] Reference is made to English Patent No. 969 of 1895, which described an automatic gas igniter consisting of a block of meerschaum containing in its pores platinum black. According to the present invention a very fine line of highly concentrated platinum chloride solution is painted downward from the top of the mantle before the organic fiber is burned out. After burning out, the line of metallic platinum left is streaked over with a solution of calcium carbonate (prepared from calcium hydrate and carbonic acid water) containing in 20,000 parts of solution one part of platinum bichloride. The latter is reduced to the metallic

---

[*] English Patent No. 18,915, Aug. 26, 1896.

[*] English Patent No. 14,499, June 15, 1897.

[‡] English Patent No. 26,618, Nov. 24, 1896.

state on heating the mantle in a gas flame. To the mantle and in contact with the upper end of the line of platinum is fitted a gas-igniting meerschaum block, such as that above mentioned. On turning on the gas, the igniting block and then the platinum line becomes red-hot, communicating the heat to the minute quantity of platinum mixed with the lime; the lime thereupon becomes incandescent and ignites the gas.

C. A. Mezger states that the monazite districts of North and South Carolina* are limited approximately on the north by the railroad from Salisbury to Asheville, and comprise the counties of Alexander, Catawba, Burke, Rutherford, McDowell, Cleveland, Lincoln, Polk, and Henderson in North Carolina, and Greenville, Spartanburg, Union, and York in South Carolina. The monazite is contained in the granitic parts of the eye-gneiss, and has been found only in partly, or wholly decomposed orthoclase, never in the fresh unaltered mineral. There can be no doubt that it has undergone a concentration in the creeks to such a percentage as permits profitable work. Mezger has found, however, many places where the rock will pay for crushing and concentrating; the more so since this monazite appears to be considerably purer than the material obtained from the creek-sand. The production of monazite for the trade takes place in a very crude way, the absence of all sizing in connection with the concentration being the greatest fault. The operation consists in digging the gravel, shoveling it on an iron plate perforated with ½-in. or ⅜-in. holes, and stirring what passes this screen with a shovel, and much water, into a box about 15 in. wide and 6 to 8 ft. long. The coarse gravel is thrown away; the sand is worked through the box with shovels, somewhat in the manner of the German *Kehrheerd*, in which operation the lighter minerals are run off as tailings. The absence of sizing causes all of the finest sand to run off also, so that of the product saved generally nothing will pass a sieve of 40 to 50-mesh. At the same time the coarsest sand of nearly ¼-in. diameter, runs off also with the garnets. On an average, the product contains about 80% of monazite. Exceptionally, material carrying 90 or even 95% is shipped; but there is also some that contain no more than 50%. Sand of between 90 and 100% command 10c. per lb.; from 80 to 90%, the price is 8 to 9c.; from 70 to 80%, 6½ to 7c.; from 60 to 70%, 5½ to 6½c., and below 60%, 4 to 5½c.

The trade was pretty regular until April or May, 1895, when some sharp speculators caused a great disturbance which greatly demoralized the business, especially in Europe, and allowed Brazilian sands to come in. At the same time, the production of thorite in Norway increased very much, so as to make it difficult now to predict what will become of the whole industry in North Carolina. At present only the Welsbach Incandescent Light Co. and a German firm are buying monazite in much reduced quantities.

The production of monazite in the United States in 1897 amounted to 40,000 lb., much of which was of the highest grade ever produced in this country. One lot yielded 10.49% thoria; 17.23% ceria; 7.14% didymia; and 7.71% lanthana. Certain mineral which was designated as "cerium monazite" yielded as high as 29.28% ceria. This mineral was mined at Demming, McDowell County, N. C. There was at the same place a small production of xenotime which contained 54.09% of yttria and erbia; it contained only 0.28% of thoria.

---

* *Transactions of the American Institute of Mining Engineers.*

NICKEL AND COBALT.

IN connection with nickel mining in the United States in 1897 there is nothing to report in addition to what has been said in previous volumes of THE MINERAL INDUSTRY. At the present time there is practically no nickel mining in this country. The Lancaster Gap mine, a once famous producer, remains closed, while the more or less spasmodic attempts to open the mines in Nevada and Oregon have not yet resulted in anything material. Some experimental work was done at both places in 1897. The domestic production of nickel in 1897 was 33,700 lb., against 17,170 lb. in 1896, all of which in both years came from nickel-cobalt speiss produced in the lead furnaces at Mine la Motte, Mo. This material is shipped to Camden, N. J., for reduction.

Nickel, nickel oxide, and nickel sulphide are produced in the United States from Canadian matte by the Orford Copper Co., Bayonne, N. J., and the American Nickel Works, Camden, N. J. The American Nickel Works remains the only producer of cobalt oxide.

UNITED STATES NICKEL STATISTICS.

Year.	Production.						Imports. (b)		Exports.	
	From Canadian Ore.				From Domestic Ore					
	Ni in Sulphide, Oxide, etc.		Metallic.		Metallic.					
	Pounds.	Value.	Pounds.	Value.	Pounds.	Value.	Pounds.	Value.	Pounds.	Value.
1893......	2,558,836	....	331,049	....	25,898	$12,429	12,427,986	$886,740	....	$378,577
1894......	(a)	(a)	(a)	(a)	9,616	3,269	9,286,733	310,581	1,295,588	247,568
1895......	1,508,216	$300,648	1,175,445	$298,861	10,302	3,091	20,355,749	629,910	1,061,285	239,897
1896......	2,096,890	419,378	1,600,049	400,012	17,170	4,464	102,412	32,582	2,756,604	606,833
1897......	1,459,390	505,241	2,640,000	913,968	33,700	11,668	177,392	53,013	4,255,558	997,391

(a) The total product of fine nickel and nickel in sulphide, oxide, etc., was 4,223,115 lb., valued at $818,869.
(b) Includes nickel oxide, nickel alloys, in which the nickel is the chief element of value, and all forms of nickel, except manufactures.

UNITED STATES PRODUCTION AND IMPORTS OF COBALT OXIDE.

Year.	Production	Imports.		Year.	Production	Imports.	
	Pounds.	Pounds.	Value.		Pounds.	Pounds.	Value.
1892...............	7,869	32,833	$60,067	1895..............	6,400	36,155	39,889
1893...............	8,422	28,164	41,105	1896..............	12,825	27,189	36,212
1894...............	6,763	24,020	29,857	1897..............	19,300	24,771	34,773

It is impossible at this time to give complete statistics of the production of nickel in the world in 1897. In all probability, however, the total was less than 4,500 metric tons, and perhaps as little as 4,000 tons, owing to the large stocks of metal that were carried forward from 1896 when the world's production was 4,611 metric tons.

The world's production of nickel in 1896 was larger than in 1895, which was unexpected, owing to the inactivity in the nickel market. The demand for this metal does not grow; the business is in the hands of a few concerns, and their productive capacity is far beyond the present requirements of the trade. Hence there are no longer great fluctuations in the price of nickel, and the course of the market is nearly devoid of interest. The average price of refined nickel in New York in 1897 was 34.62c. per lb.

The production of metallic nickel, including the metallic contents of that sold in the form of oxide, sulphide, sulphate, etc., in 1893–97 was as follows (the figures being metric tons):

Year.	New Caledonia.				Canada.	Norway.	United States.		World's Total.
	Prussia.	France.	England.	Total.			Domestic	Imported	
1893	898	[a]1,600		2,498	1,807	118	11	1,320	4,424
1894	522	1,545	355	2,422	2,226	108	4	1,990	4,755
1895	698	1,545	305	2,548	1,764	108	5	1,220	4,420
1896	822	2,150		2,972	1,541	108	8	1,685	4,624
1897	(b)	(b)		(b)	1,818	(b)	15	1,859	....

(a) Nickel contents of ore shipped from New Caledonia to France and England; the production of metallic nickel by the French works alone was much larger than this, amounting to 2,045 metric tons (accumulated stocks being drawn upon). (b) Statistics not yet reported.

The figures for France and Prussia are from the official reports of the government statistical offices; the amount credited to England is obtained by deducting the output in France, officially reported, from the combined output of the French and English works as given by the *Metallgesellschaft*, Frankfurt-am-Main. The actual output of the English works (meaning all in the United Kingdom) is somewhat greater, since there is a little Canadian ore smelted there. The Prussian figures, on the other hand, represent a slightly larger output than should be credited to New Caledonia, since there is a small amount of nickel of domestic origin included therein. These inaccuracies are not, however, of much consequence. The Canadian figures are those of the Geological Survey of the Dominion. The production of Norway in 1895 and 1896 is estimated the same as officially reported in 1894. For purposes of comparison the production of metallurgical works in the United States is appended; it is not included in the world's total because all but a few tons of this metal has already been counted as Canadian.

The world's production of nickel, as given in the above table, is probably overstated slightly, since Messrs. Base & Selve, which is the most important nickel smelting firm in Germany, have produced previous to this year some metal from oxide imported from the United States. Since the latter was derived orginally from Canadian ores, its metal contents have been counted twice in the method of statistical computation employed here, once as Canadian and once as Prussian; for the same reason the total for New Caledonia arrived at by adding the Prussian report to that which is smelted in France and England from New Caledonia ore is correspondingly high. The error is not, however, very important.

A unique feature of the nickel industry is the extent and variety of the journeying which much of the ore undergoes before it is finally converted into pure metal. The New Caledonia ore, after abortive attempts at smelting on the island, is now sent to Europe, part going to Great Britain (Scotland), part to France and part to Germany. In the form of oxide it may go from one of these works to another for final reduction. The Canadian matte is brought chiefly to Bayonne, N. J., for treatment, but a comparatively small quantity has in previous years gone to Great Britain (Wales). Oxide made from Canadian matte is at times, however, exported from the United States to Europe and is there reduced to metal. In 1897 and in 1896 practically all of the Canadian matte was brought into the United States, the mines which formerly shipped to Wales being closed.

At present the world's production of nickel is considerably in excess of the consumption, and there must be a comparatively large accumulation of stocks. From this the inference is, of course, that unless there should be some sudden and unforeseen new demand for the metal the production must be restricted.

New Caledonia.—Nickel mining is already about at a standstill in New Caledonia, where there is only one important mine the (Si Reis) now in operation. The "Société Le Nickel," which operates the mines of the east coast of New Caledonia, is doing nothing at all except making shipments from accumulated stocks, and is said to have at least 100,000 metric tons of 6 to 7% ore on its wharves. The owners of the Katepehai mine have 20,000 tons of 8% ore which was offered last year at 11s. per unit delivered in any American port, with a minimum tenor of 8% Ni guaranteed. The Si Reis mine, situated on the western side of the island, is operated by Louis Bernheim, who was shipping in 1897 about 1,000 tons per month. This mine is one of the most favorably situated in New Caledonia, being only 28 miles from the coast, with which it is connected by a railway. Besides this various small mines are being exploited. The freight on ore from New Caledonia to Glasgow is 20s. per ton. The exportation of nickel and cobalt ore from New Caledonia during the four years 1893–96 has been as follows (in metric tons):

Kinds.	1893.	1894.	1895.	1896.
Nickel ore...........	45,614	40,089	38,976	37,467
Cobalt ore...........	520	4,156	5,302	4,823
Cobalt matte........	169	7	*Nil.*	*Nil.*

The falling off in the nickel production of New Caledonia is attributable to the competition of the Canadian mines and American refiners, who can undoubtedly produce more cheaply than the European refiners are able to do from New Caledonia ore.

Norway.—At the present time it appears that the known resources of nickel in the world are far in excess of the needs for the metal at existing prices. Both in New Caledonia and in the Sudbury district the supply of ore is immense; and recently Prof. Vogt, who is eminent as a geologist, if not as a metallurgist, has asserted that by the introduction of modern methods of mining and smelting the old Norwegian mines are capable of making a large output at a cost which would not compare unfavorably with the Canadian. In the *Norsk Teknisk Tidskrift* he says the Canadian ores average about 2.75% Ni; the Norwegian are of lower grade. The Ringerike ore assays about 1.7% and the Evje goes from 2 to 2.25%. This difference may be offset, however, by the cheaper coal and labor in Scandinavia. The cost of production at the Ringerike mine averages $0.1474 per kg. of nickel in the ore. In the smelting process at Ringerike, ore with 1.7% Ni is concentrated to a matte assaying from 8 to 10% Ni, but with modern furnaces a matte containing from 12 to 15% Ni and half as much copper might doubtless be made. Probably metal assaying 98 to 99.5% Ni can be produced in Norway at 40.2c. per kg.

Ontario.—The statistics of nickel production in the Sudbury district, as reported by the Ontario Bureau of Mines, are given in the following table:

Schedule.	1892.	1893.	1894.	1895.	1896.	1897.
Ore raised................tons	72,349	64,043	112,037	75,439	109,097	93,155
Ore smelted..............tons	61,924	63,044	87,916	86,546	73,505	96,093
Per cent. nickel...............	3.36	2.21	2.92	2.67	2.67	....
Per cent. copper..............	3.19	2.38	3.14	2.73	2.54	....
Per cent. cobalt...............	0.1007	0.08	0.0731	....	....	....
Ordinary matte...........tons	6,278	7,176	10,410	12,525	9,733	13,706
Bessemerized matte.......tons	1,880	452	1,470	103½	....	328
Nickel contents...........tons	2,082	1,653	2,570½	2,815¾	1,948½	1,999
Copper contents...........tons	1,936	1,431	2,748	2,365½	1,868	2,750
Cobalt contents...........tons	8½	19	3¼	....	....	....
Value of nickel...............	$590,902	$454,702	$612,724	$404,861	$357,000	$359,651
Value of copper..............	232,185	115,200	195,750	160,913	130,660	200,067
Value of cobalt...............	3,718	9,400	1,500	....	....	....
Wages paid....................	339,821	252,516	311,719	209,960	247,151	253,296
Men employed.................	690	495	655	444	435	535

In the six years the total quantity of ore raised from the mines has been 526,120 tons, and the quantity smelted, 469,928 tons. This ore contains in addition to its nickel, copper, and cobalt a small amount of platinum, say about 1 oz. troy of platinum to 1,000 lb. avd. of nickel in the matte. There has not yet been any production of platinum from this source, though there is likely to be in the near future. In the above table the tons are of 2,000 lb.

Other Sources.—Several new discoveries of nickel and cobalt were reported in 1897, among others a vein near Ferguson, British Columbia, which was said to show ore assaying 7% nickel, and one near Bimbowrie, South Australia, the ore assaying 19 and 26% Co; of the latter a small parcel was shipped to Europe as a sample. Nansen, the Arctic explorer, is said to have discovered nickel in the far north, and to have organized a company in St. Petersburg to exploit the deposits.

Metallurgy.—The metallurgy of nickel has remained unchanged and there have been few publications on the subject. Thomas Storer of Glasgow, in English Patent No. 22,721 of 1896, proposes a new process which he claims to be specially adapted to the treatment of silicate ores, like those of New

Caledonia. According to this the finely-divided ore, which should pass a sieve of 60 meshes per linear inch, is heated for about six hours under pressure to about 370° F. in admixture with ferric chloride solution, whereby nickel chloride solution is obtained, together with a fine red oxide of iron suitable for use as a pigment. The nickel may be recovered from the solution by any of the usual methods. The color of the oxide of iron may be varied by altering either the temperature at which it is treated, or the strength of the solution. Usually a solution containing 26½% of solid ferric chloride is suitable for an ore with 5 to 8% of nickel, and 1,700 lb. of the dry salt would be used per ton of ore.

Assaying.—In the assay of nickel ores and nickel steel several new methods have been proposed. O. Ducru, in *Comptes Rendus*, 1897, No. 125, (11) pp. 436–439, describes a method for the separation of nickel and cobalt from iron, wherein the solution in which the iron has been peroxidized is evaporated to dryness with a slight excess of sulphuric acid, taken up with as little water as possible, 5 to 10 g. of ammonium sulphate added, and the whole warmed till a clear solution is obtained. The liquid is transferred to Riche's apparatus* in which has been placed 60 or 70 c.c. of strong ammonia, and electrolyzed with a current density of 25 to 45 milli-ampères per sq. cm. of the cathode. In less than four hours the electrolysis is complete. Figures are given both for known mixtures of iron and nickel or iron and cobalt and for nickel steels, which show that the method is very accurate, and that for ordinary purposes it is not necessary to take into account the iron deposited on the cathode. Silicon and carbon need not be separated in the first place, nor do the small quantities of manganese or phosphorus, or of chromium, interfere with the method. A small amount of chromic acid, however, prevents the deposition of the nickel.

J. Spüller, in the *Chemiker Zeitung*, 1897, XXI., pp. 243–244, states that the following method for the estimation of nickel in nickel steels gives satisfactory results: 2 g. of the sample to be examined, and 2 g. of a normal nickel steel containing a known amount of nickel, are weighed out into two 250-c.c. flasks, and about 60 c.c. of nitric acid (sp. gr. 1.2) added to each. The contents of the flasks are boiled until solution is complete, and nitrous fumes are no longer given off. When cold, the iron is precipitated with zinc oxide, and the green colors of the resulting filtrates are compared, a white homogeneous paper being used for a background. Since nickel steels generally contain from 1 to 7% of nickel, a fairly reliable result can be quickly arrived at, if the standard has about the same percentage of nickel as the sample. The author employs three standard nickel steels containing 1, 3 and 5% of nickel. More accurate results may be obtained by comparing the colors in a calibrated vessel and adding a known volume of water to the test until the color is identical with the standard. Steels containing under 1% of nickel cannot be submitted to this method, on account of the faint color of the solution.

Nickel Steel.—Nickel steel has been described by Dr. Charles Guillaume† of Neufchatel, who says the small, and almost immeasurable expansion of

---

* *Ann. Chim. Phys.*, (5) XIII., p. 528.

† *Comptes Rendus.*

some nickel steel alloys constitutes a remarkable anomaly which no other alloy has shown so far. The nickel steel alloys prepared in the Imphy Steel Works possess a greater homogeneousness than most of the other similar metals in the market. Though the surface of the bars appears as usual slightly cracked, the body consists of a perfectly sound metal, which readily takes a fine polish without the least puncture, even if examined through a glass of "80" magnifying power.

The resistance of nickel steel to the attack of water increases with the nickel contents. The least expanding alloys, containing about 36% of nickel, are sufficiently unassailable so that they could be exposed for months to air saturated with moisture without being tainted by rust. Concerning expansion, measuring rods were allowed to remain in warm water for hours and were not wiped off when taken out; then they were exposed for a longer period to hot steam, but the lines traced on the polished surfaces were not altered. The rough surfaces, on the contrary, when exposed to steam were covered after several days with a continuous, but little adhesive, coat of rust. Hence, the first attack by rust should be prevented above all else.

All these alloys are very sensitive to hydrochloric acid; even the proximity of badly washed solder can affect their surface injuriously.

The modulus of elasticity of the samples was determined by means of an apparatus previously employed by Benoit, and the specific gravity by hydrostatic weighing with the following results:

Alloys. Per Cent.	Gravity at 0° C.	Mod. of Elas. in Tons Per Sq. Mm.	Alloys. Per Cent.	Gravity at 0° C.	Mod. of Elas. in Tons Per Sq. Mm.	Alloys. Per Ct.	Gravity at 0° C.	Mod. of Elas. in Tons Per Sq. Mm.	Alloys. Per Ct.	Gravity at 0° C.	Mod. of Elas. in Tons Per Sq. Mm.
Tool steel	7.813	22.0	22.......	7.908	19.1	30.3...	8.049	16.0	36.6...	8.086	15.0
5% Ni....	7.787	21.7	22+3 Cr.	8.084	19.7	31.4...	8.008	15.5	37.5...	8.005	14.7
12.4+1 Cr	7.892	19.0	24.......	8.111	19.3	34.6...	8.066	15.1	39.5...	8.076	14.9
16.8+1 Cr	7.892	18.3	26.2.....	8.096	18.5	36.1...	8.098	14.7	44.5...	8.120	16.4
19........	7.913	17.7	28.......	8.096	18.1	36.4...	8.082	14.9	100.0...	8.852	21.6

A study of the above table shows that the more elastic alloys are heavier, the less elastic ones lighter. The modulus of elasticity decreases at first slowly until the 20% alloy is reached, then it increases, passes its maximum at 22%, and decreases again in order to increase anew at about 40%.

Most of the test rods were subjected to repeated heating. The length was measured in the intervals between the heats. These tests were executed with especial care in the case of the less elastic alloys. Heating to 100° C. produced a contraction of the alloys with less than 25% of nickel, while richer alloys expanded; 44% alloy only suffered a slight contraction.

Dr. Guillaume prepared an alloy of 36 parts of nickel and 64 parts of iron, the expansion of which was but one-tenth that of platinum. For measuring apparatus and machines exposed to abrupt changes of temperature this discovery may prove of considerable importance.

Nickel steel has also been the subject of experiments by the British Admiralty, and the result of its tests have been favorable to its more extensive use. It is being used largely in the new Japanese war-ships building in England, not only as armor plate, but also for the crank, propeller shafts, connecting rods, and other forgings. It is the general opinion of engineers acquainted with the qualities of this material that if it should be adopted for cylindrical boilers that have very thick shells, such as are used in large steam vessels, an important saving in weight, perhaps 25%, could be effected. For railway purposes, too, this alloy must have a bright future, as it should be specially adapted for locomotive details.

Cobalt.—The production of cobalt oxide in the United States in 1897 was 19,300 lb. (worth $1.70 per lb.), against 12,825 lb. in the previous year. This was derived almost entirely from the nickel-cobalt speiss obtained at Mine la Motte, Mo. There are no statistics as to the world's production of cobalt oxide and salts, probably because the industry has been of so little importance comparatively. The chief supply of cobalt ore has been obtained from New Caledonia, whence the exportation in 1896 was 4,823 metric tons, against 5,302 in 1895, and 4,156 in 1894. In 1896, however, preparations were made to exploit on a large scale the great deposits of cobalt-manganese ore, which were discovered a few years ago in the Westerwald, a mountainous district on the line between Rhenish Prussia and Westphalia; a company, the "Westerwald-Kobaltwerke," having been organized for this purpose. These deposits, which were described by Dr. B. Neumann in *Glückauf*, October 2, 1897, and are situated five miles west of Herborn, a station on the Cologne-Giessen Railway, exist in the form of a bed of great area and thickness. The ore, which is oxidized and black to bluish-black in color, is thought to average about 25 to 30% Mn, 4% Co, and 1% Ni, although there is a good deal that is higher in cobalt. It has been proved over an area of 7,000,000 sq. m., and is from 2.5 to 11 m. in thickness. It is a problem what disposition can be made of so large a supply of cobalt as seems to be available from this source, it being certain that the present uses for cobalt oxide will not consume much, and the company is making extensive experiments as to the properties of metallic cobalt, and its effect on steel.

NICKEL MINING IN THE SUDBURY DISTRICT.

BY A. MCCHARLES.

IMPORTANT among the developments in this district in 1897 was the addition of a third furnace to the works of the Canadian Copper Co. early in the spring, and since then the three furnaces of this company, with a united capacity of over 350 tons per day, have been constantly running. The bessemerizing plant in connection with the works was also run for a short time in the summer and again during the last three weeks of the year, turning out high-grade matte that carried about 40% nickel and the same or a little more copper. The grade of the ordinary matte is between 20 and 25% each of nickel and copper.

At the Travers mine, in Drury township, the smelter was running for part of the season on old ore, and at the Murray mine a new furnace was put in, and all the ore remaining on the roast heaps when the mine and works were closed down two years ago, amounting to several thousand tons, was made into low grade matte under contract with Joseph Wharton of Philadelphia.

The output of the mines and the shipments of matte from the district must therefore have been considerably greater in 1897 than during the previous year.

Considerable progress was also made last year in the development of new properties. The Canadian Copper Co. opened a new mine of very high grade ore about half a mile to the southwest of the Copper Cliff mine, and the working shaft of the latter has been sunk another level, and is now down over 1,000 ft.

There is no regular vein system on the nickel range, and the ore bodies, though much alike in many respects, have seldom any direct connection with each other. They occur separately or in detached groups along the narrow diorite belts—except in the township of Levac, where the surrounding formation is a sort of graywacke conglomerate, passing into a granitoid rock in some places—and rise in most cases into rounded hills and ridges above the surface. Some of them are of enormous size. But the contact bodies, lying at the junction of the diorite and the granite, appear to be the only deep mines in the district; the others, though more numerous, being mere pockets or single ore shoots. This new mine, however, has the peculiarity of being more like a vein than an ordinary deposit of nickel ore, and it is also a contact body.

In Creighton township a fine nickel property has been tested with a diamond drill to the depth of about 50 ft., showing a continuous bed of solid massive ore, high in nickel but low in copper. This property is reported to have been sold for $90,000, and it is proposed to take the ore to Sault Ste. Marie for treatment, in order to get the sulphur in it for use in the pulp mill there. On "Lot 8" in Denison township a great amount of stripping was done last summer, exposing a vast deposit of nickel-copper ore of high grade; the heavy capping of gossan and decomposed ore on this property carries more or less platinum and gold.

The Vermillion mine in Denison township, about a mile to the south of the main nickel range, is the most remarkable body of ore in the whole district, if not in the world. In a surface deposit of bowlders, gossan, and decomposed ore on one hill there is such a unique combination of minerals as has never been found before in one mine; namely, sperrylite or platinum ore, free gold, native copper, silver, and cassiterite. Then, underlying this loose material, at a depth of 10 to 15 ft., there is a bed of nickel-copper ore of extraordinary grade, running from 12 to 14% nickel and from 10 to 15% copper in average car lots. Hand-picked samples have assayed as high as 43% nickel and 28% copper. A large quantity of gold, in almost pure nuggets, was also taken out of a test shaft in a small quartz vein below the hill, and some placer gold was found in digging a cellar for a house. This mine was advertised to be sold by public auction last fall, but one of the parties interested in the stock got out an injunction to prevent the sale taking place, and the matter is now in court.

Hitherto the Canadian Copper Co. has virtually had a monopoly in the working of the Sudbury nickel mines, though not owning more than one-fourth of the great ore deposits of the district. But lately a formidable rival has loomed up in the organization of a powerful mining company in Eastern Ontario, with a capital stock of $5,000,000, and headed by the Messrs. McLarens of Buckingham, who are among the wealthiest and most energetic of the great lumber kings of the Ottawa Valley. It is confidently expected that this new company will begin active mining operations in the district this year (1898) on a very large scale.

Lord Douglas of Hawick has recently bonded several nickel properties in Drury and Trill townships, and the representatives of other English capitalists have been looking up the most suitable location on the range for a nickel refinery, as it is more than likely that the Canadian government will hereafter insist on having the products of these nickel mines refined in the country, instead of being shipped to the United States and Europe in the form of mattes. An application has even been made to the authorities at Ottawa for an order to cancel the charter of the Canadian Copper Co. on the ground that the company has been disregarding the terms of its charter by not refining the nickel in Canada.

In all mining operations in the district from 600 to 700 men were employed in 1897, and the following cash wages were paid by the Canadian Copper Co.: Surface men, per day, $1.38; rockhouse men, $1.38; common miners, $1.50; blockholers, $1.60; muckers, $1.60; drill machine men, $2; machine repairers, $2.25; foremen, $2.50; engineers (for 12 hours), $2.75; captains, per month, $100; and office men, from $50 to $125 per month. At the smelter the men get $1.80 for 12 hours' work, while each shift at the mines is 10 hours. Board costs $3.50 per week, including room, and for doctor's fees and an accident fund $1 a month is deducted from the men's wages.

THE NICKEL MARKET IN EUROPE IN 1897.

BY D. LEVAT.

PROBABLY the world's production of nickel ore increased slightly in 1897, owing to the increase in the consumption of the refined nickel which has been in stock in Europe for two or three years. This increase in consumption was almost entirely due to the large use of nickel-steel alloys for armor plate and other purposes. Notwithstanding the decrease in the selling price the quantity of nickel employed for German silver and other copper-nickel alloys has not undergone any material change.

The total production of nickel in New Caledonia in 1896, calculated upon the average of 7% for the mineral exported, was 2,623 metric tons of metal, equal to 37,467 metric tons of ore. About two-thirds of this amount was produced by the Société "Le Nickel" directly or indirectly by contract. The other miners sold their ore to Bass & Selve in Germany, and Vivian or Wiggins in England.

The future of nickel-mining in New Caledonia and elsewhere is dependent chiefly upon the employment of nickel-steel alloys, not only for military purposes, but also in industrial construction. Many trials have been made for the use of such alloys in the fabrication of the new rapid-firing guns for the French and German armament, but nothing has been definitely decided yet in this direction. The question of the French nickel-copper money was seriously contemplated in 1897, and a bill was presented to Parliament. If the designs for such money, which have been presented by various artists, are accepted, the matter will be carried out in 1898. The patterns of nickel coins with a hole in the center have been discarded as inartistic.

The selling price of nickel remains steady at 3 fr. per kg. for pure refined metal in cubes or cakes. There is no prospect of an increase in the price, and large contracts for 1898 have been made on this basis, the total amount sold up to the end of January being about 1,200 metric tons.

PROGRESS IN THE ELECTROLYTIC REFINING OF NICKEL IN 1897.

BY TITUS ULKE.

IT is a well-known fact that thick, coherent nickel plates have for at least three or four years been produced electrolytically at the Balbach Works, Newark, N. J. Previous to this time all attempts at the electro-deposition of nickel beyond a certain small thickness had only resulted in failure, due to the curling up and stripping of the nickel in the bath, the thin leaves of metal produced being not only troublesome to collect from the cathode, but almost impossible to melt into an ingot without serious loss.

The fact that the Balbach process was jealously guarded as a great secret recently induced an eminent German electrochemist—Dr. F. Foerster—to take up the study of the conditions under which nickel could best be deposited. Foerster finally succeeded in obtaining tough plates of nickel, fairly thick and of good metallic appearance, having electro-deposited the metal from a neutral nickel sulphate solution heated to between 50° and 90° C. The results of his experiments are summarized as follows:

Foerster put aside the idea that nickel, as usually deposited, curls up and strips because it contains a small amount of oxide, as this supposition is negatived by the experiments of Winkler, who determined the atomic weight of nickel electrolytically and found that nickel in this condition suffered no change of weight by ignition in hydrogen, and thus could not contain oxygen. Furthermore, he observed that cobalt similarly separated had a less tendency to strip, and nevertheless contained a minute but recognizable amount of oxide.

A beaker having a capacity of about one liter was used as the electrolytic cell. It was kept hot by means of a water bath, or heated directly over a burner, and the level of the liquid maintained constant by the use of a Mariotte's bottle. A solution of commercial nickel sulphate, containing 145 to 480 g. of the salt per liter (*i.e.*, 30 to 100 g. of Ni) was used as electrolyte, and a stout nickel plate was made the anode. This plate was enveloped in parchment paper to retain the anode sludge, which only amounted to 1.5 to 2% of the nickel dissolved. A thin nickel plate from which the deposited nickel could be readily stripped formed the cathode. The electrolyte was stirred, either mechanically or by blowing in a stream of air or of carbon dioxide. The preliminary experiments were made with electrodes having an effective surface of 80 to 100 sq. cm., and were continued until 25 to 40 g. of Ni had been deposited. It was found that with a current density of 0.5 to 2.5 ampères per sq. dcm., and at a temperature of 50° to 90° C., good coherent deposits, bright gray or tin-white in color, could be obtained. The higher the current density the brighter and smoother was the deposit; thus with 0.5 ampère per sq. dcm., and working with a solution containing 100 g. of nickel per liter, kept at a temperature of 80° C., the deposit had a rough surface and was dull gray in color; with a current density of 2 to 2.5 ampères, the nickel was thrown down in plates that were silver white, and had a thickness of 0.5 to 1 mm. It was noticed that the deposits frequently exhibited certain rugosities, produced by the circumstance that bubbles of hydrogen had formed at a particular spot and had thus caused a local irregularity in the current density. This trouble could have been avoided by properly stirring the electrolyte.

An experiment on a larger scale was made with a cathode of 2 sq. dcm. surface, placed at a distance of 4 cm. from the anode, and with an electrolyte heated to 60° C. and containing 100 g. of nickel per liter. Currents ranging from 2 to 15 ampères per sq. dcm. of surface were employed, the electro-motive force needed, when the former was used, being only 1.3 volt. As fully 0.5 kg. of electrolytic nickel was prepared in this way, it seems that no great difficulty need be expected in carrying out a similar process of electrolytic nickel refining on a commercial scale.

With regard to the purity of the electrolytic nickel, a special research was made. The commercial metal used as an anode was obtained from America and contained: 0.40% C, 0.02% Si, 0.10% Cu, 0.43% Fe, 0.14% Co, and 0.02% Mn. Of these, the carbon, silicon, copper, and manganese were completely eliminated and no trace of them could be found on examining 20 g. of the electrolytic nickel. The iron and the cobalt, on the other hand, occurred in the electrolytic nickel in almost undiminished quantity. It was supposed that iron, at least, would be gotten rid of, because it is electro-positive to nickel, but apparently with the higher current density used it is precipitated together with the nickel. The only way to prevent the coprecipitation of the iron is to add an organic acid, such as tartaric acid, under which conditions the iron can be thrown down first with a low current density and then the nickel with a higher current density. This, however, would scarcely be practicable in a continuous process of refining with a soluble anode of crude nickel.

Dr. Foerster conducted another series of experiments, using a solution of nickel chloride, which on the whole did not act as well as the nickel sulphate. Thus at the ordinary temperature the deposited nickel soon stripped from the cathode, and when a hot solution was used a basic chloride was deposited. This difficulty can be overcome by working with a slightly acid instead of a neutral solution, good deposits being obtained with about 2.5 g. of free hydrochloric acid per liter. Another trouble, when using the chloride solution, is that the envelopes of parchment paper around the anodes are quickly attacked by the electrolyte; this difficulty may be avoided by abolishing the envelope and trusting to the natural tendency of the residue of the anode to stick together, which it does fairly well, if not disturbed by the stirring arrangement in the bath. When the anode was inclosed in a piece of linen instead of parchment paper, it was found that even when working under such conditions as had previously proved successful the nickel was separated in a brittle state and stripped easily from the cathode; the output, moreover, was only about half that calculated from the current used. This was found to be due to the fact that the linen envelope was strongly attacked and yielded soluble organic substances, similar to those which Coehn observed to be produced from a carbon anode immersed in strong sulphuric acid. Part of the carbon of these organic substances was precipitated with the metal at the cathode, which contained as much as 0.6% of carbon. The electrolyte possessed a smell resembling that of caramel, and yielded a dark-colored, brittle metal even after the organic envelope had been removed; nothing but a renewal of the solution seemed to be effective. However, under favorable conditions, the nickel deposited from the chloride solution was about as pure as that obtained from the sulphate electrolyte.

Dr. Foerster also investigated the practicability of using an insoluble anode of carbon in depositing nickel from its solutions. This is a matter of importance because it might then prove possible to leach out a nickel ore or roasted matte and circulate the solution through electrolytic baths, reducing the metal in this way instead of heating it with charcoal or coke in the usual manner. The general arrangement of the apparatus was similar to that already described. The electrolyte contained from 50 to 100 g. of nickel per liter in the form of chloride; it was kept at a temperature of 80° C., and the level of the bath was maintained constant by the use of a Mariotte's bottle filled with a slightly acid solution of nickel chloride. A current density of 2 ampères per sq. dcm. was employed. At the beginning of the experiment the nickel was deposited in excellent condition, an intensity of 1.8 to 1.9 volt and a distance between the electrodes of 2.2 cm. being used. It soon became apparent, however, that on account of the solvent action of the chlorine set free at the carbon anodes on the nickel at the cathodes (in spite of efforts to keep it away as much as possible), the output of the nickel was not more than 66 to 70% of the calculated quantity. Satisfactory deposition at this rate continued until some hundreds of grams of nickel had been separated, when the yield began to fall off, at first slowly, and then rapidly, until it was only from one-third to one-fourth of the calculated quantity, while dark carbonaceous masses appeared at the cathode, and the nickel became brittle and began to strip. The last portions of the deposited nickel contained as much as 0.18% of carbon.

These difficulties were due to the gradual solution and disintegration of the carbon anodes, yielding organic compounds, contaminating the solution and soon rendering it useless. Attempts were made to overcome this obstacle by working at a lower temperature—*e.g.*, 50° to 55° C.—but without favorable result. Various kinds of carbons were tried for the anodes, but even those said to be of especially good quality failed to stand. This, however, only applies to the ordinary molded carbons of commerce, and some other form of carbon may yet be found to prove more refractory.

The investigation is being continued, and it is possible that nickel may be more easily obtained from a solution of the sulphate, using lead peroxide as an insoluble anode, than by the previously described methods. The deposition of cobalt seems to give less trouble than that of nickel, even when carbon anodes are used in a chloride solution.

The writer agrees with Dr. Foerster in believing that a sulphate solution is used at Newark in the commercial refining of crude Orford nickel. It should be noted that the saving there of the platinum and palladium in the anodes is incomplete, owing possibly to their partial deposition on the nickel cathode from a neutral bath.

NITRATE OF SODA.

THE world's supply of nitrate of soda is derived chiefly from the northern provinces of Chile. It occurs there in a narrow band following the eastern foot of the coast line of hills, at an elevation of 3,000 to 4,000 ft., and at a distance from the sea varying from 15 to 35 miles; extending from Pisagua in the north to Antofagasta in the south, about 250 miles.

Owing to its rainless condition, the region is now almost devoid of vegetation, but previous vegetable growth there has been in abundance, as shown by the remains of forests a few inches below the surface. The crude nitrate is found under a layer of a few inches of dust. The first layer is extremely hard rock, containing from 10 to 20% of nitrates; this rock varies from a few inches to 18 ft. in thickness, and is bored through to reach the richer material called caliche, which contains sometimes as much as 80% of nitrate. The caliche layer also varies in thickness up to 7 ft.

The rock nitrate is neglected, and only the caliche is carted away to the crushers, and thence to large iron boiling-tanks, a favorite size for which is 32 ft. in length by 6 ft. in width and 9 ft. in depth. In these tanks are five or six coils of steam pipes, and the boiling is done by steam at about 50 lb. pressure. The boiling-tanks are connected in series of six, so as to allow of proper lixiviation. The liquor of the tanks, called "caldo" (soup), is run off at 112° to 108° T. It then contains about 80 lb. of nitrate to the cubic foot, of which it deposits 40 lb. in cooling to 25° C. in the open crystallizing-tanks. The mother liquor, containing sometimes over 2 g. of iodine to the liter, after five or six days is drawn off into reservoirs, and is pumped up to the iodine-house, where it is treated with bisulphite of soda, and after the deposition of the iodine is used over again in the solution of the nitrate.

Although the production of nitrate in these provinces has increased so largely, and many millions of capital have been put into the manufacture in the last 20 years, there has been little real improvement and economy in the production.* The style of working which was used in the early days, in works making a few tons a week, is still employed, on a larger scale, in establishments making 250 tons a day. In the extraction of the crude material, the same laborious and

---

* William Newton, in a lecture before the British Association, Sept. 18, 1896.

expensive borings for blasting are made by hand, at a distance of every few yards, through solid rocky material. Winding engines are an exception, even in the most costly plants, and the crushers are still put at a great height. The caliche has, therefore, to be carted up hill over loose roads in carts weighing 40 cwt., and with a load of about 45 cwt.

The boiling by indirect heat is slow, a charge taking from 12 to 14 hours, and goes on too quietly to give the requisite stirring to the muddy residue; and, although there has been an advance in connecting the boiling-tanks, so as to obtain better lixiviation, the residues, containing often 12% of nitrate, are thrown away.

The worst feature, however, according to Dr. Newton, is the complete neglect of the millions of tons of the rocky cap called "costra," which in the aggregate contains vastly more nitrate than has ever been, or will be, extracted from the caliche. It is already broken up by extracting the caliche below it. It analyzes over large areas an average of 16 to 20% of nitrate, with a thickness very often of 10 ft. and more. This is neglected now, just as in earlier times all except the softest caliche, analyzing over 60%, was left, and the caliche was considered as properly boiled when the residues containing 30% of nitrate were thrown away.

The necessity for the introduction of economies in this industry is the more striking since the supply of nitrate, so far as known at the present time, is not enough to last another century at the present rate of consumption, if the existing methods of exploitation are to be followed.

J. F. Campana, Director of the Delegacion-fiscal de Salitreras, recommended in a recent report to the Chilean Minister of Finance that the state make no further sales of its nitrate deposits, but wait until those which are now being exploited are exhausted. Mr. Campana estimates that the total amount of available nitrate in Chile is about 73,000,000 net tons. With a yearly production of 1,380,000 tons, the whole will be exhausted in 53 years.

The origin of the Chilean deposits of nitrate of soda has been described by Alberto Plagemann in a paper entitled "Sobre la formacion jeolojica del salitre bajo el punto de vista de la fermentacion quimica," published in the *Boletin de la Sociedad Nacional de Mineria*, March 31 and April 30, 1897.

Alberto Herrman* stated that the cost of production (per quintal) at three nitrate mines is as follows:

	San Jorge.	Puntunchara	San Pablo.
	Cents.	Cents.	Cents.
Extraction of the caliche..........	27.68	32.47	59.40
Carting..........................	12.90	23.46	21.26
Concentration....................	32.08	37.62	48.89
General costs....................	7.22	9.01	12.87
Various..........................	0.17	1.32	....
Totals........................	80.05	103.88	142.42

The Chilean nitrate industry has to contend against the competition of artificial soda manures and sulphate of ammonia, the output of which rapidly increases year by year, the discovery of nitrate deposits in other parts of the world, and

---

* *Boletin de la Sociedad Nacional de Mineria*, 1897.

the competition of guanos rich in nitrogen, phosphoric acid, and potash, like those recently discovered in the island of Corcovado, Peru. Lately, as is well known, the Chilean industry has been suffering a serious depression. The continuance of this is having an alarming effect on both the revenue and trade of Chile. Hundreds of workmen have been thrown out of employment in the nitrate districts, and they are going to the south, where, at the present time, there is no demand for labor. The government is being urged to provide work for these unemployed by starting several useful public undertakings, but as yet it has made no move in this direction. These workmen, accustomed as they are to the comparatively high wages of the north, find it very difficult to reconcile themselves to the lower wages prevailing in the south.

The depression in the nitrate industry has, moreover, seriously affected the Chilean government, which derives nearly half its revenue from nitrate duties. Realizing the importance of revivifying the industry, the government joined the Permanent Nitrate Committee in the propaganda carried on by the latter to introduce the product in new markets. The ministry promised at least $75,000, which may possibly be increased to $200,000, toward this object. The duty was taken off some sample cargoes which were sent to China and Japan, while special agents were sent to the United States with a view of increasing the use of nitrate in this country. These movements, however, did not do much to relieve the situation in 1897.

The railways which carry the product to the coast have also made concessions to help the producers. The freight rate charged by the Nitrate Railways Co. has been reduced several times. In 1893 the rate was 9.75d. per quintal, and on April 1 of that year it was reduced to 9d. In January, 1894, it was further reduced to 8d., which remained the rate until January 1, 1897, when it was reduced to 6d. The gain to the producing companies by these reductions during the five years, 1893–97, is estimated to have been £656,000.

As to the producing companies themselves there are very few which have paid dividends in late years, notwithstanding the concessions on the part of the railways, and the combination formed among themselves to maintain prices by limiting production. In spite of this agreement prices continued to fall. Early in June the spot price for nitrate of soda touched 6.50 marks in Hamburg, this being the lowest figure ever recorded up to that time. A meeting of the leading producers was held at Iquique, on June 25, to take further steps for a restriction of the exports. At the formation of the combination of the 80 producers of importance, two years previous, the exportation for the fiscal year ending March 31, 1897, was limited to 20,300,000 quintals, and for the year ending March 31, 1898, to 23,500,000 quintals. At the meeting in June an effort was made to secure a reduction of 10% from the allotment of the current year, the decline in price being due obviously to the fact that the exportation in the previous year was greater than the market would stand in the face of the increasing production of sulphate of ammonia. The further reduction proposed was agreed to by the various producers in the combination, but there were new and independent concerns, chief among them the Salar del Carmen and Alianza syndicates, which remained outside the agreement, and when their works began production the combination was disrupted. This happened in October, at which time nitrate was quoted in New York at $1.60@1.62½ per 100 lb. These new concerns, which are better equipped than many of the old ones, and can produce nitrate at a lower cost, it was considered, would probably more than make up the quota of the companies which had become defunct during the depression which has lately existed in this industry, and so long as they refused to enter the combination the latter was powerless.

The first nitrate combination was formed in 1884 and lasted three years. The restriction in production which was brought about thereby improved the condition of the industry for a short time, but in 1891 it became necessary to reorganize the combination, which this time lasted until 1893. The next year the Associacion Salitrera de Propaganda was formed for the purpose for extending the consumption of nitrate by the dissemination of literature concerning its advantages in Europe and America. This, however, did not accomplish all that was desired, and in 1896, with a good deal of difficulty, a combination was formed again.

The formation of the last nitrate combination, which became operative April 1, 1896, and was to extend until April 1, 1898, was attended with a good deal of sharp practice to secure an improper allotment, and from the outset on this account largely there was never the unanimity that there had been in the previous combinations. From January 1 to April 1, 1896, the works manufactured to their maximum capacity, on account of an interpretation of a clause in the agreement insisted upon by the Lautaro Co. This company declared that the agreement included a clause giving power to producers, in order to arrive at the producing capacity (if not satisfied with the previous year's results as a basis), to proceed making for 90 consecutive days and nights, and the result multiplied by four was to form a basis of producing power on which to fix the quota. The absurd inequality of this was speedily shown. Many producers having spent the previous few months in collecting raw material and preparing, made more in three months than they ever had done in ordinary working in nine months. A few, such as the Rosario Co., did not take advantage of this procedure, and were left with less than half the quota that the Lautaro Co. got. Others, not to be left behind, doubled their machinery power. Hence to-day the nominal productive machinery power is reckoned to be 75,000,000 quintals, where the maximum nominal power to produce, when the combination started, was not more than 40,000,000.

At the time of disruption of the combination the price of nitrate was 4s. 10d. per quintal, f. o. b. in Chile; 2s. 4d. of this had to be paid to the Chilean government, 6d. to 9d. in railway freights and shipping charges, and about 3d. in supplying bags, etc. Consequently about 1s. 6d. per quintal of 100 lb. Spanish (101½ lb. adv.) was all that was left to cover cost of production. Generally the companies would require an amortization for the exhaustion of their grounds and plant of from 1s. to 2s. per quintal, and very few can cover the items of outlay in cost of refining for 1s. 6d., and in many cases 2s., some even 2s. 6d., per quintal; consequently many of the companies were spending 2s. 6d. to 4s., and getting back 1s. 6d.

Since October, 1897, 31 out of the 80 establishments in Chile have suspended operations, and it seems inevitable that many of the weaker producers must go to the wall. If this happens, unfortunately their property will probably pass into new hands for so low a price that they can be put in operation whenever an improvement in price would make this worth while. There does not, consequently, appear to be much hope in improving the condition of the nitrate industry by crushing out the weak producers. In many quarters the opinion has been expressed that the only solution will be a regulation of the industry by the Chilean government, which has enormous interests at stake, the industry furnishing employment to a large portion of the Chilean population besides constituting the mainstay of the revenue of the government. Assistance to the industry has been considered seriously by the government, but it has not yet taken a decided action in the matter.

Early in 1897, however, it promulgated a new law empowering the president to grant three and a half years extension of time to purchasers in arrears for nitrate properties. Purchasers who had exploited over 30% of the nitrate contained in the property at the time of the sale were not entitled to the extension, while purchasers who took advantage of the act are required to pay the total amount of their indebtedness before the termination of the extension if they should exploit 50% of the nitrate contained in the property at the time of the sale.

The statistics of the nitrate industry are given in the following table:

NITRATE OF SODA SHIPMENTS, CONSUMPTION, STOCKS, AND PRICES FROM 1890 TO 1897. (*a*)

	1890.	1891.	1892.	1893.	1894.	1895.	1896.	1889.
Shipments from South American ports to all parts......	1,028,000	759,000	784,000	929,000	1,079,000	1,218,000	1,088,000	1,087,000
Afloat for Europe Dec. 31....	514,000	321,000	215,000	358,000	393,000	506,000	351,000	371,000
Stocks in United Kingdom...	24,000	23,000	20,000	9.100	17,300	21.500	24,000	21,000
Stocks in Continental ports..	172,000	191,000	185,000	92,900	101,700	134,500	324,000	224,000
Consumption in U. K.........	119,000	120,000	117,000	100,000	114,500	117,500	105,000	108,500
Consumption in Continent...	666,000	703,000	685,000	682,000	749,500	789,500	805,000	867,500
Consumption in U. S.........	104,000	100,000	100,000	104,000	100,000	110,000	105,000	110,000
Consumption in other countries......................	....	....	....	....	....	7,000	8,000	14,000
Consumption in the World..	889,000	923,000	902,000	886,000	964,000	1,024,000	1,023,000	1,100,000
Visible supply Dec. 31.......	710,000	535,000	420,000	460,000	512,000	662,000	699,000	616,000
Price Dec. 31, per cwt. (112 lb.)	7s. 7½d.	9s. 1½d.	9s. 1½d.	9s.	8s. 10½d.	7s. 7½d.	7s. 10½d.	7s. 6d.

(*a*) In long tons; from W. Montgomery & Co.'s Circular.

ANALYSIS OF COMMERCIAL NITRATE OF SODA.

Dr. H. Pauli* criticises the existing methods for the valuation of commercial nitrate of soda as being antiquated and inexact, the percentage of sodium nitrate, the most important constituent, being arrived at by difference. This is highly inexact, since the Chilean nitrate of soda is often contaminated with potassium nitrate, occasionally to the extent of 6%, and in these cases it is clear that corresponding to the higher atomic weight of potassium proportionately less nitric acid exists than is indicated in assuming that the entire difference between 100 and the total of the impurities determined is sodium nitrate. Obviously the nitric acid and potassium should be determined directly.

For the determination of nitric acid Dr. Pauli considers Reich's method the most suitable. According to this the nitrate of soda dried at 130° C., is heated to dull redness with an excess of pure silica in a platinum crucible, whereby the

---

* *Journal of the Society of Chemical Industry*, 1897.

nitric acid is driven off and determined by the loss in weight. It has been found by repeated experiments that there is no appreciable loss of the chlorides by volatilization. Recently perchloric acid has been found in nitrate of soda, probably present as potassium perchlorate, in one case to the extent of upward of 6%. Determinations of this acid subsequently showed sometimes none and sometimes from 0.1 to 1.3%. It is necessary, therefore, in determining nitric acid by the method described to make two chlorine determinations, one before heating the sample and one after heating, using Volhard's volumetric method, calculating the difference as perchloric acid, and subtracting the loss in weight due to the evolution of oxygen from the perchlorate from the loss of weight obtained by heating with quartz. By the present method of determining the amount of nitrate of soda by difference all perchlorates are estimated as nitrate of soda. The presence of potassium nitrate has no effect on the accuracy of the silica method.

PETROLEUM.

There was considerable increase in the production of petroleum in 1897, which was largely attributable to the Appalachian field (including the various oil districts of Pennsylvania, New York, West Virginia, and Eastern and Southern Ohio) whence the pipe-line runs were 34,724,700 bbl., against 33,455,571 bbl. in the previous year. There was also an increase in the production of the Lima field (Ohio and Indiana). The actual production each year differs slightly from the pipe-line runs, owing to increases or decreases in the stocks at the wells, but we prefer to use these figures as representing the quantity of oil actually delivered to the market.

PRODUCTION OF CRUDE PETROLEUM IN THE UNITED STATES. (BARRELS OF 42 GALLONS.)

Year.	Appalachian Field. (*a*)	California. (*b*)	Colorado.	Indiana. (*c*)	Kansas.	Ohio. (*d*)	Wyoming.	Other States.	Total.
1893....	30,541,740	600,000	730,000	2,335,293	None.	16,134,485	None.	3,000	50,344,518
1894....	30,622,336	600,000	803,000	3,688,666	40,000	13,891,795	2,300	2,000	49,650,097
1895....	30,406,693	1,245,339	530,000	4,386,132	44,400	18,415,631	8,500	1,800	55,038,495
1896....	33,455,571	1,257,780	400,000	4,659,290	113,500	15,362,176	2,878	3,600	55,254,795
1897....	34,724,700	1,070,000	650,000	4,353,138	(*d*) 90,000	15,307,376	15,000	8,000	56,218,214

(*a*) Includes New York, Pennsylvania, West Virginia, and part of Ohio. (*b*) Statistics of California State Mining Bureau for 1895, 1896 and 1897. (*c*) Statistics of State Geological Survey. (*d*) Lima field only.

The total net stocks of oil in the hands of the various pipe-line companies, in barrels of 42 gallons, Dec. 31, were as follows:

Appalachian.			Ohio-Indiana.		
1895.	1896.	1897.	1895.	1896.	1897.
5,161,905	9,550,583	10,789,652	21,474,848	23,302,779	22,762,779

EXPORTS OF MINERAL OILS FROM THE UNITED STATES. (IN GALLONS.)

(1 = 1000 in quantities and values.)

Year.	Crude Petroleum.		Naphthas.		Illuminating.		Lubricating and Paraffine.		Residuum.		Totals.	
1893........	114,609	$3,926	16,249	$933	705,675	$31,283	34,763	$4,888	461	$28	871,757	$41,058
1894........	114,269	4,617	14,832	904	726,727	29,799	38,975	5,137	119	10	894,922	44,463
1895........	116,108	6,286	12,922	1,000	686,006	43,540	47,876	6,289	170	15	863,082	57,131
1896........	118,133	6,032	13,641	1,123	758,076	49,704	51,705	6,770	521	28	942,076	63,657
1897........	121,864	5,044	13,704	1,020	804,446	46,876	52,679	6,732	12,247	335	1,004,941	60,007

The exports of petroleum products from the United States were larger in 1897 than in any year in the history of the industry. The shipments of case oil to

China and Japan, which were interrupted during the war between those countries, have been resumed again on a large scale. The export statistics show that in spite of the competition of Russian, Galician, Rumanian, and Sumatran oil, and an adverse policy on the part of certain foreign officials, the American petroleum products are holding their own in the world's markets.

MONTHLY AND YEARLY AVERAGE PRICE OF PIPE-LINE CERTIFICATES PER BARREL OF CRUDE PETROLEUM AT THE WELLS.

Year.	Jan.	Feb.	Mar.	April.	May.	June.	July.	Aug.	Sept.	Oct.	Nov.	Dec.	Yearly Average
1892..	$0.62⅜	$0.60¼	$0.57⅛	$0.57⅞	$0.57⅜	$0.54⅛	$0.52½	$0.55	$0.54⅜	$0 51⅜	$0.52	$0.53¼	$0.55⅝
1893 .	.53½	.57⅝	.65¼	.68¾	.58¾	.60¼	.57⅝	.58⅞	.64⅝	.70¾	.73⅞	.78¼	.64
1894..	.79¾	.80⅝	.82	.84¼	.86	.89⅜	.83⅛	.81	.83	.83	.83	.91½	.83⅞
1895..	.99	1.04¾	1.09¾	1.79	1.74¼	1.58⅝	1.46⅝	1.26⅛	1.22⅞	1.24¼	1.48⅝	1.42	1.35⅞
1896..	1.45¾	1.39	1.83½	1.22⅞	1.10¾	1.14¾	1.09½	1.05	1.13⅞	1.15¼	1.15½	.97⅞	1.19
1897..	.88	.90⅛	.92⅛	.85⅞	.86¾	.86¼	.76¾	.71	.69¾	.65	.67⅜	.65	.78⅝

A pipe line extending from Millway, Lancaster County, Pa., to Bayonne, N. J., a distance of 128 miles, was completed by the National Transit Co.

California.—The production of petroleum in the Los Angeles field in 1897 was 1,070,000 bbl. The decrease as compared with the previous year was due to a partial suspension of operations in September, October, and November on account of previous overproduction. Since then, however, extra storage facilities have been provided which will, in the future, enable more regular pumping. It is believed that the production in 1898 will average 120,000 bbl. per month, and if the market warrants it the output can be increased still further.

The total number of holes so far put down in the Los Angeles field is about four hundred. The best well produces about 75 bbl. per day; the average wells yield 5 to 50 bbl. There is said to be no profit in the production unless $1 per bbl. is realized for the oil. The railroads are the principal buyers, and the producers think they obstruct efforts to send the oil to San Francisco, where a large quantity could be used to replace steam coal, which costs $6 per ton. The Santa Fé and Southern Pacific railroads are now burning oil on most of their locomotives in use in this part of California.

Colorado.—The production of petroleum in this State in 1897 was 650,000 bbl. The average number of men employed in the industry was one hundred; the number of wells producing at present is thirty-five. The entire production is derived from Florence, where there are three companies in operation, two of which have refineries with a combined capacity of 2000 bbl. per day. The demand for residuum, which is used by many mills as fuel for steam purposes and for roasting ores, is in excess of the supply, and a number of new wells is being sunk in the endeavor to extend the field and augment the product.

Indiana.—In 1897 in Indiana there were completed 1041 new wells at an average cost of $1500 each, of which 280 were dry holes or gas wells. The total number of wells finished in 1896 was 1637, of which 452 were dry. Up to the present time there have been 9464 wells drilled in the State, of which 3004 have been dry. These wells represent an outlay of $15,142,400, not including bonus money paid for leases, etc., nor the investment in the two main pipe lines. During 1897 the output of the Indiana field averaged about 23,000 bbl. per day.

The Indiana and Illinois pipe line which ran from the old Indiana oil fields to

Kankakee, Ill., where the oil was loaded into tank cars, for shipment to Chicago, was sold to the Standard Oil Co., of which it had been previously a competitor.

Ohio.—In 1897 in Northwestern Ohio there were completed 2755 new wells, of which 490 were failures, so reckoned, although some of them were gas wells. The average cost of these new wells was $1800. The average daily production of the district at the end of the year was about 80,000 bbl.

The Northwestern Ohio oil field covers Wood, Hancock, Allen, Auglaize, Sandusky, Lucas, Mercer, Van Wert, Seneca, Wyandot, and Ottawa counties, and several adjacent counties. In this district, where the first production was made at the Lima paper mill only about 14 years ago, there have been drilled 30,054 wells, of which 4676 have been gas or dry holes. A trifle more than one-third of the total number of wells has been drilled in Wood County.

There was no discovery of a sensational nature in this field in 1897, the most interesting developments being the new field in Lucas County and that which has been opened a few miles east of the old Findlay field and the very productive pool at Hume in Auglaize County. The Hume pool, which was never large in area, is now nearly exhausted. The new field in Lucas County is very promising since so far the more drilling that has been done the larger it appears to be, while the production is of course increasing. The Klondike well on the Miller farm, which was completed in July, maintained a daily output of nearly 150 bbl. The total number of wells drilled in this field since its discovery in the early part of the year has been five hundred and ninety-four.

Texas.—Petroleum was discovered early in 1898 at Corsicana, at a depth of 1040 ft. At this horizon there is a bluish sandy shale about 20 ft. thick, which is saturated with petroleum. There is no rock either above or below, the drill passing down the whole way through a hard clay. The oil is said to be better than the Ohio oil, but not as good as the Pennsylvanian. It most resembles that produced at Neosha, Kansas. Its flow is like that of the wells in the Bradford field. An analysis of the oil showed about 90% of volatile matter and 10% of residuum. As compared with other oils results are as follows:

Crude Oil from	Specific Gravity at 17° C.	Began to Boil at degrees C.	Came over under 150° C. Per Cent.	Between 150° and 300° C. Per Cent.	Over 305° C. Per Cent.
Texas-Corsicana	821	80	84.6	40	15.8
Pennsylvania	818	82	21	38	40.7
Galicia	824	90	26.5	47	26.5
Baku	859	91	23	38	39
Alsace	907	185	3	50	47
Hanover	899	170	....	32	68

The line of development at present is about 1¼ miles long, and covers an area of about 150 acres. It costs about $1500 to put down a well, and the royalty varies from one-eighth to one-tenth. The present production is used exclusively for fuel. Some is consumed at the wells and in the local manufacturing establishments, and the rest goes to Dallas, Houston, Austin, etc. In the towns named it is being used in making illuminating gas. It is delivered in Corsicana for fuel at 75c. per bbl.

At the end of the year there were 38 producing wells in the district with an average daily product of about 18 bbl. Transportation facilities having been very deficient, there were about 6000 bbl. of crude oil stored in tanks at the wells. In February, 1898, there were 62 wells producing an average of 14 bbl. per day. There were also 10 dry holes, 7 wells drilling, and 10 derricks in course of erection for additional wells. The total output was estimated at 1000 bbl. per day, worth 50c. per bbl.

Experiments with Texas petroleum by F. C. Thiele showed that kerosene of excellent quality, having a flash test of 115° F. and a fire test of 155° F. and giving a very bright, white light, could be produced. The material experimented with gave naphtha, 10.8%; kerosene, 54.5%; residue, 34.7%. About 20% more kerosene could be obtained if the residue were subjected to the cracking process.

THE WORLD'S PRODUCTION OF PETROLEUM. (*a*) (IN METRIC TONS.) (*b*)

Year.	Austria.	Hungary	Canada.	Germany	India.	Italy.	Japan.	Russia.	United States.
1891	87,717	726	105,660	15,315	20,455	1,131	7,400	4,756,417	7,573,990
1892	89,871	20	109,080	14,527	29,084	2,548	9,825	4,896,179	7,046,199
1893	96,331	14	111,700	13,974	31,079	2,652	13,276	5,790,692	7,023,285
1894	111,930	2,061	116,000	17,232	44,506	2,853	23,837	5,191,552	6,926,861
1895	188,634	2,085	114,653	17,051	52,032	3,594	(*b*) 24,207	7,056,330	7,677,364
1896	262,356	2,168	114,370	20,395	60,228	2,524	....	....	7,708,236

(*a*) From the official reports of the respective countries. This table is only partially complete since it does not include the production of Sumatra, Borneo, and Java. (*b*) Estimated from hectoliters.

Austria.—Early in the summer of 1897 the association of the Austro-Hungarian refiners for the control of the Austrian trade was disrupted and that market is now an open one. All attempts to maintain the agreement were fruitless since the Trieste refinery and the Carpathian Refining Co., together with several smaller concerns, stubbornly opposed a renewal of the allotment plan which had been in force during the previous year.

Borneo.—A good deal of development is being done in the oil fields of Southeastern Borneo, especially in the vicinity of Nati, where a giant gusher was recently opened. A pipe line to connect the Nati field with Moear-Biberik, the nearest shipping point, where a large refinery is to be built, is now in the course of construction. The petroleum resources of this island are said to be important.

Canada.—There are three oil-producing districts in the Dominion: (1) The Petrolia district of Ontario, (2) the Gaspé Basin of Quebec, (3) the Northwest Provinces. The first is the only one that has so far attained industrial importance. As now developed this field extends about 8 miles W. N. W. and about 4 miles E. S. E. of the town of Petrolia. The average depth of the wells is 465 ft. The average yield of new wells is from 1 to 1.5 bbl. per day for a month or six weeks, after which there is a gradual decline, but the wells yield with remarkable persistency for many years. The production of crude petroleum in Ontario in 1897 was 608,490 bbl., against 651,919 bbl. in 1896.

The crude oil is conveyed from the wells to the refineries, of which there are six, by pipe lines and tank cars. The Canadian production of petroleum is not sufficient for home requirements and a large quantity has to be imported from the United States.

The oil fields of the Gaspé Basin of Quebec occur near the extremity of the Gaspé peninsula. A number of wells have been drilled in this district, some of them to a depth of over 3000 ft. An oil of excellent quality has been obtained.

Recently it has been reported that oil has been discovered in this district at a more moderate depth.

United States Consul Dickson writes from Gaspé Basin that the Petroleum Oil Trust Co. has for some time extended its operations to a district about 22 miles distant from Gaspé Basin, near one of the tributaries of the York River, called the Mississippi Brook. Several wells have been bored in that neighborhood with varying results; some have yielded half a barrel, some one barrel, per day. On July 23 well No. 27 produced a quantity of oil from a depth of 1400 to 1500 ft. The well flowed several times before it was under control, and 300 to 400 bbl. were lost. It was pumped later, and gave at one pumping 1600 gal. The oil is of very good quality and the rock beds are nearly flat in its neighborhood, whereas in the parts of the country first prospected the wells were bored into the rock at a sharp angle.

The extensive oil fields which exist in the southeast Kootenay district of British Columbia and in the southwest part of Alberta, and are thought to reach beyond the international boundary into Montana, are soon to be developed by the Kootenay Coal Co. of Montreal, which owns large tracts of land in the field. These oil fields were first discovered in 1891. There are also said to be extensive oil fields in the McKenzie Valley of the Northwest Territory.

China.—It is reported that an extensive oil field in the province of Shen-Si is about to be developed by a French company. A small amount of petroleum for local consumption is produced at Tsz-Liu-Ching in connection with the salt wells. The brine, which may contain as much as 20% petroleum, is allowed to stand in tanks until the oil has risen to the surface, when it is skimmed off for use without refining.

France.—Shale, in the Permian formation, is quarried and distilled for the production of oil in the districts of Autun (Saône et Loire) and Buxières-la-Grue (Allier). The schist is broken up and carried on endless bands to the retorts, which are constructed of cast iron. Distillation is carried on for 24 hours. From the 12th to the 20th hour the oil is distilled off, before and after this chiefly steam coming over. The vapors pass through two condensers, ammoniacal liquor being condensed in the first, and oil in the second. The average yield from 1 cu. m. of shale is 40 to 70 liters of crude oil, 50 to 65 liters of ammoniacal liquor, and 25 to 35 cu. m. of uncondensed gases. The crude oil is a dark fluorescent liquid with an alliaceous odor, and a sp. gr. of 0.87 to 0.91.

Germany.—The production of petroleum in Alsace in 1890 was 12,977 metric tons; 1891, 12,847; 1892, 12,942; 1893, 12,609; 1894, 15,868; 1895, 15,439; 1896, 18,834. The increase in 1894 was due to the boring of a number of wells which proved very productive. In the first three quarters of 1897 there were opened four new wells, producing 50, 60, 100, and 120 bbl. of oil per diem, the barrel being equivalent to 150 kg.

Hungary.—It has been known for some time that Hungary possesses several petroleum fields, but their development has been retarded hitherto by the heavy production of Galicia and the lack of sufficient markets. With the recent expansion of the Austrian petroleum trade, however, more attention has been paid to the Hungarian oil fields. In October, 1896, drilling was commenced in the bed of the Stevna River by Frommer & Co., Ltd., of London, and at a depth of

250 ft. the first oil horizon was reached. On March 1, 1897, the hole had reached a depth of 530 ft. and would produce 4 bbl. per day, but the oil was not recovered, the intention of the company being to sink to 1300 ft. in order to test thoroughly the field. In the mean time two additional wells have been begun. This field is situated near Korosmezo, a town in the central part of Eastern Hungary.

India.—The most important petroleum deposits of the Indian Empire are situated in Upper Burmah, where the existence of oil has been known for at least two centuries. The Burmah Oil Co. is the most important producer. In the early stages of working in the Kodaung field, in the Yenangyaung district, oil was found at a depth of about 500 ft. and the yield was generally from 5 to 20 bbl. per well per day, the production declining rapidly, however, until the well became non-yielding, when it was made productive again by deepening. Recently all wells have had to be sunk to about 1000 to 1200 ft. At Yenankyet, 8 miles south of Pagan, and on the opposite side of the Irrawadi to Yenangyaung, there is another oil field, where the Burmah Oil Co. has already drilled about 25 wells to a depth of 1000 to 1200 ft. Each of these wells yields on the average from 15 to 20 bbl. of oil a day. At Minbu, about 18 miles below Yenangyaung on the western side of the river, there are promising indications in the neighborhood of some remarkable mud volcanoes.

The Burmah Oil Co. conveys its oil in bulk by river to its refineries at Dunniedaw and Syriam, near Rangoon. The former has recently been enlarged to a capacity of 800,000 to 1,000,000 gal. of crude oil per month. The latter, which was erected for refining the Yenankyet crude oil, has a capacity of 500,000 to 600,000 gal. per month.

In Lower Burmah, petroleum occurs in the Arrakan Islands, but none of the deposits has assumed commercial importance, although several wells have been drilled on the Outer Baranga Island and on the island of Ramri. In Assam oil occurs over a large area. Drilling operations have been actively carried on by the Assam Railways and Trading Co. at Digboi and Makum for some years, and in the former district there is a large and increasing production. For dealing with this crude oil a refinery has been erected. Promising results have also attended the drilling operations of the Assam Oil Syndicate, whose concession adjoins that of the Assam Railways and Trading Co. Petroleum also occurs in the Punjab, in Baluchistan, in the Indus Valley, and elsewhere in India, but the operations which were undertaken in these districts have now been abandoned.

Japan.—There are four petroleum-producing districts in Japan. The first is situated between five and six miles from Nagaoka, and in this district there are about 60 wells at work. During 1894 and 1895 the wells were very productive, the outturn being about 30,000 gal. a day. Latest reports, however, show that the production is decreasing, and it does not now exceed 10,000 gal. per day. Pumping has to be maintained continually in these wells, which vary from 600 to 1500 ft. in depth; and in some the flow is so trifling that pumping can only be carried on intermittently. This small flow of oil appears to be a characteristic of most of the Japanese wells. Not far from this district another petroleum-yielding area was discovered about two years ago. The first wells, sunk to from 400 to 600 ft., gave very good returns; but after a few months the flow slackened, and though pumping has now been resorted to, the production appears to be rapidly decreasing. In these new wells the quality is fairly good, and in some excellent, the analysis showing 70 to 75% of illuminating petroleum, while the Nagaoka wells do not average more than 54%. But the method of refining the oil is very ineffective, the process being carried on in small private stills, and, the product being thus of uneven quality, it is found necessary to mix it with from 40 to 50% of American oil before it can be used for illuminating purposes. A new refinery, however, is in process of construction at Nagaoka, capable of dealing with from 7500 to 8000 gal. of crude oil daily; and it is asserted that the oil in this refinery will be brought up to the American standard. There is also a refinery with a capacity of 4000 gal. a day at Niigata.

The second district from which oil is obtained is situated at Idzumosaki and Amasemachi in the province of Echigo. The same results have followed the working of the wells in this district as in that first named, and not only have many of the wells been abandoned, but the new wells sunk have given very poor returns. It is doubtful if the whole outturn of this district exceeds 5000 gal. per day. The deepest well is 2400 ft., and from this the best oil is obtained, the others varying in depth from 400 to 1800 ft. In quality there is great diversity among these wells, some producing only 45% of illuminating oil, while the best reach 75%, the oil being treated in a good, though small, refinery on the spot. It seems certain that the district is almost worked out, and the pumping machinery employed is continually being removed to other localities.

The Japan Petroleum Co. has control of a district situated from 10 to 12 miles from that first mentioned, where there is an output of not more than 1500 gal. per day. The product is of an inferior quality, and there are expectations that this district will shortly be abandoned as not worth further development. About 40 miles from the district first named there is a number of wells where, though the flow is superior to all the others mentioned, the quality is exceedingly poor. The outturn is about 25% of illuminating oil and 40 to 50% of lubricating oil. The latter is difficult to dispose of, as it is sold unrefined, and factories with complicated machinery use only the American product. Even when employed for lubricating rough machinery, the Japanese oil is mixed with American. It costs about half the price of the latter.

The total output of the Echigo fields is from 650,000 to 700,000 cases refined yearly; but, as already pointed out, the production is decreasing. Presuming that the yield of the Echigo wells is from 650,000 to 700,000 cases, this represents only one-eighth of the total import of foreign petroleum, which in 1896 amounted to 5,462,000 cases. Thus, taking everything into consideration, it does not seem that there is likely to be much competition between the foreign and the Japanese product, 80% of the latter being consumed by Echigo and the surrounding provinces alone, while the remainder is placed at a disadvantage, owing to difficulty of transport. At the wells the price of crude oil varies from 2.50 yen ($1.25) per koku (about 50 gallons) to 6.15 yen ($3.07), according to quality. The refined article is sold retail in the districts of production at from 2 to 2.05 yen ($1 to $1.02) per case; but when it comes into competition with American, Russian, and Langkat oil at Osaka, it is found necessary to sell the Echigo product at 1.85 to 1.90 yen (92 to 95c.) per case, notwithstanding that the cost of freight, insurance, and leakage from Niigata, the port of shipment, to Osaka must reach 15 sen (7c.) per case at least. Unless, therefore, there are discoveries of oil fields with a much greater output than those of Echigo, it would seem that the foreign product is not likely to be displaced by the Japanese.*

Java and Sumatra.—The imports of kerosene into Java in 1897 amounted to 30,439,965 gal., of which 20,092,900 were American, 4,951,060 Russian, and the remainder Sumatran. In 1896 the total importation was 27,412,285, of which 16,786,820 was American and 7,319,510 Russian.

The current prices are $1.26 per case of 10 gal. for American oil, $1.22 for Russian, and $1.18 for Langkat. The duty on foreign oil is about 0.4c. per gallon, or 4c. per case. S. B. Everett, United States Consul at Batavia, says that Russian oil, though it undersells American, is being driven out of the market. The Sumatra oil shows a larger percentage of increase than the American oil; but this is due to the lower price of the local article. A determined fight is being made against the Standard Oil Co., and everything is done, officially and commercially, to hinder and annoy it. Locally, it is commonly reported that the Standard Oil Co. is doing business at a loss, whereas the Sumatra oil companies are supposed to be making money, one of them having last year paid a dividend amounting to 100%. There is a successful refinery in Java, near Sœrabaya.

According to a French consular report, there are in the districts of Lidah and Koetei, Java, 40 wells, with an average daily production of 19,800 gal. of oil, which could easily be increased to 25,000 gal. Recent reports are to the effect that two new wells have been discovered, producing about 2400 bbl. per day additional. In the district of Panolan there are 15 wells, the largest of which has a daily production of 2400 bbl. The wells of Tinawen have been but little exploited. A company has obtained a 10-year concession for this district, and the probable yield is estimated at 1600 cases a day. There are two refineries and another in process of construction. The paraffin factory at Ploentoeran, which has a capacity of production of 6000 lb. a day, is only partially in action. A factory at Wonokrano supplies all the oils necessary for the sugar refineries and for the railroads of Java. The production of refined petroleum on this island in 1896 was 1,250,000 cases.

A great deal of capital is being invested in the oil fields of Sumatra and Java. Last May the East Indian Exploration Co. was organized at Amsterdam, Holland, with a capital stock of 300,000 florins, to develop a tract of land comprising 35,000 acres in the residency of Samarang, Java. On an area of 500 acres, which is explored so far, more than 40 natural oil wells were found. Experts entrusted with a preliminary investigation rendered a glowing report as to the productivity of the field, which is located in the immediate neighborhood of the railway station of Telewa, the railway intersecting the field at several places. The Petroleum Maatschappij Moera Enim, which was organized recently at Amsterdam with a capital stock of 10,000,000 florins, is the successor of a syndicate formed in 1895, and is composed of the Bank of Paris, the Berliner Handels-Gesellschaft of Berlin, and Messrs. Labouchere, Oyen & Co. of Amsterdam. This syndicate has secured concessions on large tracts of land in the residency of Palembang, Sumatra.

---

* Kobé *Chronicle*, Feb. 28, 1898.

Mexico.—Petroleum is said to have been discovered in Oaxaca.

Newfoundland.—According to Canadian authorities the petroleum producing district of Newfoundland appears to extend over an area of about 250 sq. miles, and in geological formation consists of limestone and conglomerates, shales, and sandstones. An analysis of the crude oil, gathered from surface depressions, gave the following results: Illuminating oil, 14.5%; lubricating oil, 82.5%; solid residue, 3.0%; sulphur, 0.098%. The oil obtained from a depth of 1000 ft. was much lighter, and yielded a higher percentage of illuminating oil. The crude oil was dark olive green in color, of aromatic odor, and had a sp. gr. of .844 at 60° F. On distillation it yielded: Naphtha, 7%; illuminating oil, 56%; lubricating oil, 34%; coke, 3%. The products of distillation have a pleasant odor and are very easy to refine. The illuminating oil is water-white, of high flashing point, and burns with a brilliant flame. The crude oil is very free from grit and other foreign substance, and consequently the heavy oil, after suitable treatment, makes a very good lubricant. The quality of the oil compares very favorably with the best American oils. All the wells hitherto sunk belong, with one exception, to the Newfoundland Oil Co. The wells are close to the sea, and only 6 to 10 miles of pipe will be required to convey the oil to the water.

Rumania.—According to a recent report of the British Consul-General at Galatz, the heavy losses which certain foreign capitalists have suffered in the petroleum fields of this kingdom have been due, not to want of success in the workings, but to the manipulations of unscrupulous speculators, who have interested foreigners in lands to which good title could not be secured.

All reports in regard to the petroleum-bearing districts of Rumania point to the fact that they can compete with the richest petroleum districts of America, Galicia, and even Russia. An eminent authority who has lately had occasion to express an opinion on the positions of Bustenar, Campina, Menteor, and Solontz is enthusiastic over the favorable geological conditions of these districts. As regards geographical position, the petroleum-bearing districts of Rumania, on account of their proximity to the river Danube, a distance varying from 90 to 125 miles, should have a distinct advantage over other petroleum-bearing countries. However, in spite of these natural advantages, the Rumanian petroleum industry has remained stationary and practically undeveloped until recently. The only plausible explanation is want of capital and initiative, and perhaps in no other European country is there such an absolute want of capital.

Russia.—Hon. James C. Chambers, United States Consul at Batum, made a report to the Department of State concerning the Russian petroleum industry in 1897, and to his courtesy and that of the Secretary of State we owe receipt of a duplicate copy which has enabled us to summarize it in this volume:

Last year was an active one for the trade, but owing to the low prices for refined, especially in the latter half, the financial results were undoubtedly less satisfactory than in 1896. The low price of refined was somewhat compensated, however, by the good prices for residuum and crude, for which the prices continued high throughout the year, advancing after the closing of Volga navigation, an almost unprecedented occurrence, since residuum bought after the close of navigation is held for the next season, a period of usually five months. Notwithstanding the heavy production of crude, the prices for it and residuum in December were the highest of the year.

It is difficult to ascertain the average cost of producing oil at Baku, but the highest estimate I have heard is 4 kopecks per pood (17c. per bbl. of 42 gal.); and I believe that this cost is rarely exceeded. Up to the close of navigation the price was never less than 7.5 kopecks per pood (about 32c. per bbl.), and in December it reached about 42c. per bbl.

The remarkable increase in the demand for residuum for fuel in Russia and the consequent high price, together with the low price of illuminating oil, resulted in making fuel oil the main object of the refining. The average price of residuum in 1897 was the highest ever known in the trade, notwithstanding the great increase in production. I am not able to give the average for the year at present, but as it was never for any considerable length of time below 34c. per bbl. and closed the year at over 40c., the average was between those figures. The increase in demand was due principally to improved distributing facilities in the manufacturing districts of Russia, and partly to an increase in the manufacturing industries themselves.

Prices of refined oil were very low at the close of 1896, but not so low as to make export entirely unprofitable. They continued declining throughout 1897, however, and by midsummer were below the actual cost of production based upon prices quoted for crude and residuum; but the high price of residuum and the fact that probably 70% of the refined was produced by concerns which had their own supply of crude prevented any great falling off in the exports.

The cost of refined oil, based upon 3.5 poods of crude being necessary for the production of a pood of refined, and 2 poods of residuum, is calculated as follows: 3.5 poods of crude at 7.5 kopecks per pood, 26.25 kopecks; labor, chemicals, etc., 4 kopecks; total, 30.25; less value of 2 poods of residuum at 8 kopecks, 16 kopecks; cost of 1 pood of refined, 14.25 kopecks, which is equivalent to about 1.5c. per gal. The average price realized during the second half of 1897 was certainly not more than 12 kopecks per pood. But as probably 70% of the exportation of refined was manufactured by refiners who had their own supply of crude, costing rarely more than 4 kopecks per pood for production, the cost of refined to these concerns figures out to only 2 kopecks per pood instead of 14.25.

Of course the high price of crude and low price of refined made it impossible for many refiners to do business, and while much more than half the total of the refining capacity was worked during the year, I believe at least half of the refineries were idle.

The combination of refiners organized in April, 1895, and known as the "Union" was dissolved in 1897. The agreement was for two and a half years, to be extended two and a half years more with the consent of all concerned; but as practically all of those interested, except those instrumental in organizing the union (who had great advantages over the majority), declined to renew their agreement, the union passed out of existence on October 13.

The first year of the combination was very profitable, owing to the remarkable advance in the price of refined in the United States, but the expected agreement with the American producers not having materialized prices at Batum had to follow American prices down the scale as they had followed them up. With the declining prices there came disagreements, and, owing to the cumbrous methods of making sales, difficulties in disposing of the product were encountered. Under these circumstances it was not surprising that business fell off.

When the true state of affairs became realized by the small refiners in the union who had no other interests than profitably disposing of their goods and no reputation to sustain in the world's markets, as was the case of the larger refiners, the disruption of the union soon followed, and at present there are no prospects of the formation of a new combination. It is now the opinion of the majority of the refiners that combination is useless, which was not clearly demonstrated, however, by the previous attempt, since its failure was due entirely to mismanagement and lack of combination.

The export of refined oil being apparently so unprofitable, the Government was petitioned for a reduction of railway freights to Batum, although a previous reduction from 19 kopecks to 9 kopecks per pood under similar circumstances had signally failed in accomplishing its object, namely, to drive American oil out of the foreign markets, the result being further loss to the exporters, owing to the reduction being met promptly by the Americans, and a big loss of revenue by the railroad (said to be about $4,000,000) before the old rate was restored. However, in November the trade was notified that the freight rate would be reduced to 12 kopecks per pood on refined oil for export, commencing December 15. The refiner who produces his own crude can now undersell all others in the foreign market, since upon a basis of 4 kopecks per pood as cost, with existing price of residuum and the reduced freight rates, refined oil can be sold at 1.6 to 1.8c. per gallon f. o. b. Batum (equivalent to about 0.5c. per gallon at Baku), which is more than a cent a gallon lower than the price of 1896.

The average daily production in 1897, about 139,000 bbl., was the largest in the history of the district, but the gain was due to the greater number of wells producing, the average production per well being less than in 1896. The great increase in operations must, moreover, result in a further increase in production in 1898 unless the territory shows more signs of exhaustion than has yet been apparent. It is the opinion of many that the territory will be found to extend northward, since several good wells have been obtained some distance north of the main field. At present it is too early to say that these new wells have opened up a large area of territory, or that they will prove an extension of the field northward, but they may do both.

So far all efforts to find new fields in the vicinity of Batum have been unsuccessful. The drilling which was done in 1896 and 1897 at Bidar-Zinda, about 50 miles north of Batum on the shore of the Caspian, between Derbent and Petrovsk, still further north, and at Poota, about 15 miles south of Batum, have not yet resulted favorably, and nothing is expected from it.

Several important sales of Baku producing property were made in 1897, and it is no exaggeration to say that at the present time more than one-half the total production is offered for sale, or is covered by options at prices which would frighten an American producer. London is the market which is being exploited, and the buyers so far have been persons with no experience in the business. English companies have already invested about $3,500,000 in producing property, notwithstanding they are compelled to hold all they buy in the name of a Russian subject, on account of the ukase of 1892.

Up to the beginning of 1898, the construction of the Baku-Batum pipe line had not been commenced owing to some difficulty encountered by the Russian-American company, which has the contract for about 125 miles, in making acceptable pipe. It is now reported that work on the line is progressing rapidly, but it is hardly likely that the construction will be completed during the current year.

The Grosni field does not fulfill the expectations which were originally held. The figures for December 31, 1897, with the corresponding figures for December 31, 1896, in parenthesis are as follows: Number of wells producing, 12 (12); daily production, 13,000 bbl. (10,000); number of wells idle, 7 (3); drilling, 24 (6); drilling deeper, 3 (1); new derricks, 6 (5). Several of the old wells continue producing largely, but the result of the new work can hardly be satisfactory since the increase in production is insignificant in comparison with what has been done. The first wells drilled in this field found oil at 440 ft. and less, but of the 24 wells drilling at the end of 1897 the larger number were considerably deeper, from which I infer that the shallower strata are exhausted and the existence of deeper strata is problematical.

Since there are two modern refineries at Grosni neither of which has been running steadily, it is clearly demonstrated that Grosni is not at present an important factor in the refined-oil trade. The Grosni crude is not much heavier than the average Baku crude when fresh, but it grows heavier rapidly on exposure to the air, so that it is not possible to take more than 8 to 10% illuminating distillate from it without leaving a residuum which is very inferior for fuel purposes. So far as I have been able to ascertain the only refinery in operation at Grosni in 1897 did not turn out more than one small cargo of refined for export. I am led to believe, therefore, that the Grosni crude is now being used in its natural state for fuel, and refining has been practically abandoned.

OUTPUT OF ALL PRODUCTS FROM BAKU IN 1896 AND 1897.

(In thousand gallons.)

Year.	Illuminating.	Lubricating.	Residuum.	Crude.	Other Products	Total.
1897	458,035	45,860	1,127,100	130,045	5,925	1,766,965
1896	404,800	33,740	901,825	75,165	5,315	1,420,865

STOCKS OF ALL PRODUCTS AT BAKU AT CLOSE OF 1896 AND 1897.

Product.	Dec. 31, 1896.	Dec. 31, 1897.
Crude at wells, barrels	764,690	592,547
" " refineries, barrels	2,686,524	1,840,212
Total crude, barrels	3,401,214	2,432,759
Illuminating oils, gallons	71,785,020	67,274,980
Lubricating oils, gallons	6,920,180	9,610,725
Residuum, gallons	238,460,315	263,532,270

SHIPMENTS OF PETROLEUM PRODUCTS FROM BATUM IN 1896 AND 1897. (IN GALLONS.)

	Crude and Residuum.		Lubricating.		Illuminating Distillate.		Refined.	
	1896.	1897.	1896.	1897.	1896.	1897.	1896.	1897.
Austria	428,825	205,190	1,211,975	2,850,120	7,085,480	12,381,270	2,182,770	2,826,580
Belgium	70,515	3,546,595	2,306,855	8,086,275	....	233,185	4,282,835	1,879,690
Bulgaria and Servia	1,500	700	32,700	58,850	....	....	4,486,055	6,989,730
China and Cochin China	....	....	....	....	....	....	11,251,210	19,406,270
Egypt	19,800	6,750	70,700	140,600	....	....	8,459,240	11,001,690
England and U. K.	168,355	2,116,810	2,337,375	4,725,945	9,666,955	13,646,660	19,068,125	23,485,345
France	1,346,870	1,637,395	3,705,990	6,699,545	14,785,630	12,855,185	1,291,915	856,270
Germany	443,265	1,236,865	6,132,055	8,518,810	15,000	97,000	1,934,795	7,257,905
Holland	....	....	....	100,000	....	....	....	....
India	....	....	....	1,000	....	....	38,160,280	34,984,880
Italy	450,650	1,843,840	208,025	559,800	....	....	4,953,115	5,862,220
Japan	....	....	....	....	....	....	3,460,540	6,142,140
Java	....	....	....	....	....	....	9,749,700	1,362,250
Manilla	....	....	....	....	....	....	1,525,100	1,626,000
Malta	....	....	....	....	....	....	685,495	1,674,415
Rumania	1,050	4,100	254,900	233,500	....	....	311,070	515,740
Spain	....	320,655	5,000	759,445	232,865	....	....	....
Turkey	41,950	73,450	74,350	130,700	....	....	27,881,400	32,336,825
Suez Canal, bulk	....	....	....	....	....	....	19,208,920	56,402,820
Africa	....	....	....	....	....	....	250,250	1,140,360
Elsewhere	....	....	5,500	4,500	....	....	239,190	511,170
Total exports	2,972,780	10,992,350	16,345,425	32,869,090	31,785,930	39,213,250	159,331,005	217,210,980
Russia	377,160	255,470	895,350	1,143,555	15,850	33,700	26,384,096	31,438,865
Total shipments	3,349,940	11,247,820	17,240,775	34,012,645	31,801,780	39,246,950	185,715,101	248,649,845
Increase	....	7,897,890	....	16,771,870	....	7,445,170	....	62,931,744

Distillate to United Kingdom was gas oil. Suez Canal bulk shipments were for points beyond the canal, but unknown at Batum.

South Africa.—New oil fields have been discovered in South Africa by Professor Helfer and Dr. Weit. These fields have been located in the Transvaal, the Orange Free State, and in the neighborhood of the Karras plateau, not far from the shore of the Indian Ocean. The oil is said to be of excellent quality, and approaches the American and Galician crude in illuminating contents.

Although petroleum has been found in several localities in South Africa no systematic work has yet been done to prove if the oil exists in paying quantities, with the exception of the oil shale of the Middleburg district in the Transvaal, where the existence of a horizontal seam of shale, averaging 3 ft. in thickness and covering an area of over 2000 acres, has been demonstrated. This shale yields 3.5% water and 21% gas and oily matter. One ton gives about 19 gal. of crude oil.

Promising indications of gas and oil are found in the Ceres district of Cape Colony, about 90 miles N. E. of Capetown, where the oil sand is thought to lie between 2000 and 3000 ft. below the surface. A company has been organized to exploit this field, and it is said that active operations will soon be undertaken.

There is evidence of oil in the vicinity of Heilbrun in the Orange Free State, and in the southern portion of Matabeleland, near the junction of the Umzingwani and Limpopo rivers.

United Kingdom.—The products of the Scotch shale-oil industry are illuminating, lubricating, and gas oils, ammonium sulphate, solid paraffin, and naphtha. The paraffin is a very important item of the output, the profits resulting from it being large when prices are good. At one time the price was upheld by an agreement between the Scotch companies and the American importers, but the compact became unworkable, and since its disruption the market has been weak. At the end of 1896 the prices had fallen so low that they scarcely more than paid for the cost of manufacture, ranging from $1\frac{7}{16}$d. per pound to $2\frac{1}{8}$d., while the commonest sort of candles could be bought at 2s. 8d. per dozen pounds. Early in 1897, however, the Standard Oil Co. knocked a farthing off its price for scale and wax and the Scotch producers had to meet the cut, bringing the price to about $1\frac{3}{8}$d. to 2d., at which it continued nominally throughout the year. The price of candles fell at first to 2s. 6d. per dozen pounds, and afterwards to 2s. 4d.

At the beginning of 1897 illuminating oil sold at $6\frac{1}{4}$ to $6\frac{1}{2}$d. per gal., according to grade. These prices were held firmly by the continued action of the Mineral Oil Association of Scotland until August, when the competition of foreign oil compelled a reduction of $\frac{1}{2}$d. per gallon.

Lubricating oils began the year on a range of from £5 to £7 for gravities 865 to 895, a range of price which was tolerably satisfactory to the makers. The demand for this oil fell off somewhat, however, on account of the engineers' strike, and at the end of the year the range of prices was £4 10s. to £6 15s.

Naphtha was steady throughout the year at a good average price, but it forms only a very small part of the output, and consequently the benefits derived by the makers were comparatively insignificant.

Sulphate of ammonia began the year at a trifle over £7 per ton f. o. b. Leith, but in January it improved a little and on to March averaged about £8. Thereafter it weakened slowly down to £7 10s. (June and July), afterwards rising rather briskly until in November it reached £9; falling away again slightly, it rallied by the middle of December and closed at about £9 2s. 6d.

The Brocksburn Oil Co. paid a dividend of 7.5%. The Oakbank and Pumpherston companies made both ends meet. The Linlithgow and Holmes companies had balances on the wrong side. Young's Paraffin Light and Mineral Oil Co. also had a bad year. The success of the Brocksburn Co. was due to a reduction in the cost of production, particularly by an improved retort which effected a great saving.

In 1869 a ton of 30-gal. Scotch shale yielded 12 gal. burning oil, 3.9 gal. lubricating oil, 2.1 gal. paraffin scale, and 14 lb. sulphate of ammonia. At the present time the yield for the same quantity of shale is 12.9 gal. burning oil, 5.4 gal. lubricating oil, 4.3 gal. paraffin scale, and 36 lb. sulphate of ammonia. Costs in 1869 were, to retort 5s. 1d. and to refine the products 5s. 6d., compared with 2s. and 1s. 11d. respectively at the present day. In 1869 the price for burning oil was 1s. 3d. per gal., for lubricating oil 1s. per gal., for paraffin scale 2s. 6d. per gal., and for sulphate of ammonia 1d. per lb.

The price of Pennsylvania kerosene in London at the beginning of the year was $5\frac{3}{8}$d. to $5\frac{7}{16}$d., with the Russian at $4\frac{7}{8}$d. to 5d., and water-white oil at $6\frac{1}{2}$d. to $6\frac{5}{8}$d. At the close of the year the prices were $4\frac{7}{16}$d. to $4\frac{1}{2}$d. for American, $4\frac{1}{4}$d. for Russian, and $5\frac{1}{2}$d. to $5\frac{5}{8}$d. for water-white.

PHOSPHATE ROCK.

THE domestic phosphate business was very quiet in 1897, but the supply of garbage, abattoir refuse, etc., is now thought to be at its limit, and the opinion has been expressed that in 1898 there will be a partial renewal of former activity in the phosphate trade, although it is unlikely that prices will be much higher, if at all, either this year or in the near future, owing to the immense supplies of phosphate rock which are available. In both South Carolina and Florida the production fell off materially in 1897, the industry in those States suffering from the same conditions which caused the heavy falling off from 1895 to 1896. In Tennessee there was a large increase. The Tennessee phosphates are being used largely in the manufacture of artificial fertilizers by various works. This industry, which is growing rapidly, now involves a large amount of capital, and is considered to be generally prosperous. It appears reasonable, moreover, to expect a steady improvement, as the use of artificial fertilizers will undoubtedly increase, the farmers of the country coming gradually to a realization of the necessity for it. There does not seem to be, however, much prospect of a speedy amelioration of the unfavorable conditions under which the greater part of the phosphate miners of Florida and South Carolina are laboring.

The statistics of the production of phosphate rock in the United States in 1897, and the four years immediately previous, are shown in the subjoined table. With respect to the figures for 1897 it is necessary to explain that they have been compiled in a somewhat different manner from that followed heretofore. That is to say the figures up to the end of 1895 represent shipments, chiefly from the points of export where there are usually large accumulations of stock. These figures are consequently somewhat misleading as to the actual production of the mines. The figures for 1896 are based partly on export returns, partly on railway shipments from the mines, and partly on direct reports from the producers. Those for 1897 are compiled almost entirely from railway shipments and direct reports. Consequently they represent more nearly the actual production of the mines than do the statistics of shipments from export ports. In the absence of precise statistics as to the stocks on hand at the beginning of 1896 and 1897 it is impossible to say what was the actual production of the mines in 1896, and therefore a comparison of the figures for 1896 and 1897, which are here presented, may be somewhat misleading. It is well known, however, that accumulated stocks were largely drawn upon in 1897, and also that there was a falling off in the production of the mines, although the shipments were somewhat larger than in the previous year. It is believed, therefore, that our statistics are a more reliable indication of the actual conditions of the industry than are the statistics of shipments alone. The latter are, however, presented in a separate table.

PRODUCTION OF PHOSPHATE ROCK IN THE UNITED STATES.

(In tons of 2,240 lb.)

Year.	South Carolina.	Florida.	North Carolina.	Ohio.	Tennessee.	Totals.	Value.	
							Total.	Per Ton.
1893	556,883	426,482	7,500	....	....	990,815	$3,467,853	$3.50
1894	493,800	558,990	9,000	....	19,068	1,080,858	3,296,602	3.05
1895	515,734	530,856	7,500	....	45,078	1,098,668	3,296,004	3.00
1896	382,068	498,400	7,418	439	49,047	937,372	2,812,116	3.00
1897	333,626	442,203	7,000	2,000	121,251	906,080	2,718,240	3.00

The total shipments in 1896 and 1897 were as follows, in long tons:

State.	1896.			1897.		
	Foreign.	Domestic.	Total.	Foreign.	Domestic.	Total.
South Carolina	82,260	232,100	314,360	65,829	257,211	323,040
Florida	397,506	100,894	498,400	436,472	124,959	561,431
Tennessee	....	42,911	42,911	16,175	105,076	121,251
North Carolina	....	7,000	7,000	....	7,000	7,000
Pennsylvania	....	....	....	....	1,600	1,600

Florida.—The continued depression in the phosphate industry was very disastrous to the Florida producers, and during 1897 an additional number of them disappeared from the list, either because of the exhaustion of their deposits or of their funds. According to the statistics of Messrs. Auchincloss Bros., there have been since the commencement of the industry in Florida in 1890 to December 31, 1897, 252 corporations or individuals engaged in the production of high-grade rock, of which only 28 are at present in operation. Of the remainder 41 failed before mining operations were commenced, while 183 commenced mining, worked for a time, but being financially unsuccessful abandoned operations. Of the 183 there were 135 which gave up in consequence of the exhaustion of their mines. The beginning of an export trade in Tennessee phosphate was an additional cause for alarm to the Florida producers in 1897, the freight rate from Tennessee to Pensacola being less than that from Albion to Fernandina.

There has probably never been any branch of the mineral industry which has proved so calamitous to the investors in it as phosphate mining in Florida. At the time of the discovery of the land rock near Dunnellon in 1888, and during the first years of the exploration of the deposits, it was supposed that they occurred in the form of beds of great thickness and considerable regularity, as was the case in South Carolina. It was not long, however, before it turned out that the deposits occurred in basins of comparatively limited extent, but this was not learned until many companies had erected extensive machinery at places where it was not needed a few months after its completion, and had contracted for the delivery of large amounts of rock which they could not obtain except at a loss to themselves. Although there are still many large areas in the phosphate district of Florida yet unopened, it seems as if the industry in that State has passed its zenith and will henceforth show a diminishing production. It is indisputable that easily worked deposits of high-grade rock, available to small operators, virtually no longer exist in Florida.

The shipments of high-grade phosphate rock from Florida in 1894–97, according to Messrs. Auchincloss Bros., are given in the following table:

Month.	1897.	1896.	1895.	1894.	Month.	1897.	1896.	1895.	1894.
	Tons.	Tons.	Tons.	Tons.		Tons.	Tons.	Tons.	Tons.
January......	12,924	16,996	15,780	16,526	August.......	19,292	19,914	14,588	37,823
February.....	20,668	16,853	17,252	4,111	September....	59,966	25,116	25,388	34,032
March........	37,243	37,155	31,283	34,126	October......	27,664	30,605	27,783	19,732
April........	32,608	36,559	41,445	36,583	November....	20,184	33,402	18,160	7,683
May..........	45.715	45,646	45,053	30,780	December....	18,537	28.618	17,008	6,060
June.........	32,837	16,511	31,027	29,818					
July.........	22,639	15.296	21,284	46,855	Totals.....	350,277	322,871	306,046	304,079

The stocks of high-grade rock on hand and ready for shipment January 1, 1898, were only one-half as large as they were a year previous.

The opinion has been expressed that if there should be any decided improvement in the price of phosphate rock the companies which are now idle would again resume mining and another period of overproduction would ensue. It does not seem likely, however, that there could be any general movement of this kind. A majority of the idle works have been closed for a period of at least two years, a considerable number on account of the exhaustion of their deposits, and cannot, therefore, be put in operation again in the same locations, but must be moved to new deposits. Many others are closed on account of financial difficulties, but in every case, in consequence of the semi-tropical climate of Florida, so destructive to wooden structures, it is probable that a majority of the plants at present closed down are so rotted that they would require rebuilding before they could be reoperated. There is reason to believe, therefore, that there would have to be an important advance in price before attempts would be made to reopen many of the mines now idle.

The greater part of the phosphate rock produced in Florida, in fact practically all of the high-grade rock, is exported to Europe. The river pebble rock, which is now produced only by the Peace River Mining Co., its output amounting to upward of 100,000 tons per annum, is used chiefly by superphosphate manufacturers in Georgia.

Georgia.—The phosphate deposits of this State have been investigated by S. W. McCallie, Assistant State Geologist, who expresses the opinion* that there do not exist in the State, with the exception of Thomas County, any deposits of phosphate rock of sufficient extent and purity to be mined with profit for the manufacture of commercial fertilizer at its present market value. The deposits

---

* "Preliminary Report on a Part of the Phosphates and Marls of Georgia," Bulletin No. 5—A, *Geological Survey of Georgia.*

in Thomas County, which were first discovered in 1889, exist in the vicinity of Boston, and their exploitation was begun at that time, but after the production of a few carloads the work was abandoned on account of the small quantity of rock and the great thickness of the overburden. The phosphate appeared in the form of nodules from 1 in. to 1 ft. in diameter, scattered promiscuously through a reddish sandy clay overlying an irregularly eroded surface of limestone. Besides these nodular deposits there is also a small quantity of soft phosphate. Analyses of the hard phosphate nodules showed a tenor of from 70 to 78.39% tribasic phosphate.

North Carolina.—A small amount of phosphate rock is mined in this State at Castle Hayne, near Wilmington. The output, which amounts to about 7,000 tons per annum, is shipped to Wilmington, Raleigh, and Richmond over the Wilmington & Weldon, Cape Fear & Yadkin Valley, and Seaboard Air Line railways. At a meeting of the Railroad Commissioners of North Carolina in May a reduction in the freight rates on phosphate rock over these lines was effected, which has made the conditions somewhat more favorable for their operation. The State purchased the Castle Hayne phosphate mines and will operate them with the convicts from the State penitentiary. It is said that the State has contracts to supply 20,000 tons of phosphate rock per annum to factories in North Carolina. A new discovery of phosphate rock was made in November, on the State property, 14 pits disclosing a bed of pebble phosphate from 3 to 4 ft. thick lying under a stratum of shell rock.

South Carolina.—Notwithstanding the small increase in the shipments of phosphate rock from this State in 1897 as compared with 1896, the conditions of the industry have undergone no improvement, and it still suffers severely from the depression brought about by the competition of the phosphate rock of Algeria and Florida. The river rock industry tributary to Beaufort has experienced this especially and bids fair to come to a standstill, notwithstanding the efforts of the State government to ameliorate the condition. The shipments of the river mining concerns amounted to 95,237 long tons, against 80,960 long tons in the previous year. The production of river rock declined from 101,349 long tons in 1896 to 76,313 in 1897.

On April 1, 1897, the Board of Phosphate Commissioners reduced the royalty on river rock from 50c. to 25c. per ton of dried rock, the new rate to continue so long as the price realized by the miners for their product f. o. b. at the mines shall be $3 per ton or less. If there should be an increase to over $3 per ton it is provided that one-half of the increase shall be paid to the State as additional royalty. In his report to the legislature January 11, 1898, Governor Ellerbe recommended that rather than make further concessions it would be better if mining operations on the State's rights, namely, the beds of navigable streams and waters, were discontinued, since it is unwise on the part of the State to sacrifice these valuable deposits while prices are so low.

In his report to the State Phosphate Commissioners December 31, 1897, A. W. Jones, the State Phosphate Inspector, reviewed the condition of the industry during the year just elapsed. Phosphate mining in South Carolina was at the zenith of its prosperity during the year ending August 31, 1893, when the shipments amounted to about 250,000 tons and the State's royalty to $250,000. On August

26, 1893, the coast was swept by the most disastrous storm in its history, the mining plants were practically swept away, and the river mining industry was paralyzed. Later in the year the legislature passed an act reducing the royalty to 50c. per ton for five years to those companies which would reconstruct their plants and resume operations. This was done by the Coosaw Phosphate Co., the Beaufort Phosphate Co., the Farmers' Mining Co., the Ashley Phosphate Co., the Carolina Mining Co., James Reid, and John C. Nelson.

Since the storm of 1893 the prices of phosphate rock have declined without any reaction, and on January 1, 1897, had sunk as low as 4.75d., or 9.5c. per unit c. i. f. The average price in 1897 was 5d., or 10c. per unit, and the average freight about 13s., or $3.12 per ton, consequently rock analyzing 57% phosphate of lime, worth at 10c. per unit, $5.70 f. o. b., would net the companies only $2.23 per ton, deducting $3.12 for freight and 35c. for insurance, commission, cost of chemical analysis, etc. Out of this must be paid the State's royalty, cost of towing, mining, drying, loading, etc. During 1897 freights fluctuated from 11s., or $2.65 per ton, to 17s., or $4.03. There were in operation April 1, when the royalty was reduced, six dredges; on June 1 the Coosaw Co., which had been operating two, suspended work, having on hand between 33,000 and 34,000 tons tons of rock. On October 18 the Farmers' Mining Co. also suspended, going into the hands of a receiver. Subsequently the property of this company was sold to West & Penrose of London, and it is believed that operations will be resumed.

The total amount of rock shipped during the year was 95,237 long tons, of which the Coosaw Co. shipped 34,984, the Farmers' Mining Co. 29,757, and the Beaufort Phosphate Co., 21,199. The remainder was shipped by James Reid, James O'Hear, the Empire Phosphate Co., and the receiver for the Farmers' Mining Co. The amount of rock mined during the year is estimated at 76,313 tons, and the amount in stock December 31 is estimated at 26,659 tons.

The Carolina river rock, which occurs along the margins of the navigable streams of the State and in the river beds, is convenient to the main lines of railroad, and can be mined quickly and delivered cheaply alongside vessels for shipment abroad, or on cars for local consumption. By far the larger part of the production of river rock is exported, land rock being generally used in the local manufacture of fertilizers. During the year the Farmers' Mining Co. sold a cargo of 3,000 tons of rock for shipment to Japan in direct competition with the Algerian and Florida producers. Another noteworthy feature of the year was the increase in hand-picking, the Empire Phosphate Co. doing its mining exclusively in this manner. There were 300 men engaged in this work on the Coosaw River, diving in depths varying from 6 to 18 ft. for the rock or using hand-grabs if the water was too cold. During the past season nearly 15,000 tons were mined by this method.

Tennessee.—The production of phosphate rock in Tennessee in 1897 experienced a large increase, the shipments amounting to 121,251 long tons against 42,911 in the previous year. Of the production in this State in 1897, 23,046 long tons were derived from the Blue Rock district and 98,209 long tons from Maury County. An important development of the year was the beginning of an export trade in this rock, 16,175 long tons having been shipped to Europe through the port of Pensacola, a low freight rate from the mines to that port having been obtained. In October the rate from Mt. Pleasant to Baltimore, Md., was established at $4.10 per gross ton.

A map of the Mt. Pleasant phosphate field, recently compiled by Rhum & O'Neal, shows the extent of the field to be about 9,500 acres, of which about 2,500 acres contain high-grade phosphate rock with an average of 3,000 tons per acre.

At the end of the year there was estimated to be 19,000 tons of rock in stock in the Mt. Pleasant field. Prices during the year ranged from $1.50 to $1.90 per ton f. o. b. cars at Mt. Pleasant.

PHOSPHATE PRODUCTION IN FOREIGN COUNTRIES.

The world's production of phosphate rock is derived chiefly from the United States, France, Algeria, and Belgium. The principal French deposits, which were discovered at Beauval, in the Department of the Somme, in 1886, are found in the Cretaceous chalk, where they occur as a phosphate sand in large cylindrical or cone-shape pockets from 10 to 20 ft. in diameter. The Belgium deposits, which are situated in the vicinity of Mons and Liege, occur in two dissimilar beds of Cretaceous formation, the upper, known as the "Conglomerate," consisting of brownish phosphatic nodules cemented together by calcium carbonate and attaining a maximum thickness of 3 ft., while the lower, which is by far the more important, is made up of a very fragile, porous limestone or chalk, in which occur numerous small concretions no larger than a mustard seed, these concretions frequently forming 10% of the entire mass. They are separated from the calcareous matrix by washing after having been ground or allowed to become disintegrated by exposure to the atmosphere.

THE WORLD'S PRODUCTION OF PHOSPHATE ROCK. (*a*) (IN METRIC TONS AND DOLLARS.)

Year.	Algeria.		Belgium. Cubic Meters.		Canada.		France.		Norway. (*c*)	
1892	....	....	268,210	$756,000	10,825	$157,424	....	....	11,119	$270,189
1893	....	....	331,230	881,000	7,437	70,942	....	....	4,258	96,713
1894	64,260	$230,888	371,776	879,300	6,224	41,166	539,000	$3,311,142	2,427	45,873
1895	157,886	634,323	506,730	683,140	1,653	9,565	526,784	3,160,600	1,518	26,541
1896	165,738	500,905	297,470	587,320	517	3,420	582,667	3,502,027	2,086	36,720

Year.	Redonda. (*d*)		Russia. (*b*)		Spain. (*b*)		United Kingdom.		United States.	
1892	....	....	23,238	$40,445	2,150	$3,152	12,395	$111,250	923,263	$3,354,098
1893	....	....	13,706	36,994	211	415	3,353	28,855	1,006,668	3,467,853
1894	579	$5,525	14,072	31,680	40	80	711	6,385	1,098,147	3,296,602
1895	5,778	24,880	6,327	18,682	1,040	2,081	2,540	21,875	1,116,247	3,296,004
1896	(*e*)	(*e*)	(*e*)	(*e*)	770	3,080	3,048	26,250	952,370	2,812,116

(*a*) From the official reports of the respective countries and *Annual General Reports on the Mineral Industry of the United Kingdom*, by C. Le Nevé Foster. (*b*) Phosphorites exported. (*c*) Apatite exported. (*d*) Phosphate of alumina exported. (*e*) Statistics not yet published.

A recent estimate of the total consumption of phosphatic material in the world is as follows: Superphosphate, 4,000,000 metric tons; raw phosphate, 400,000; Thomas phosphate, 1,525,000; bone phosphate, 400,000—total, 6,325,000 metric tons.

Algeria.—The shipments of phosphate rock from Bône in 1897 came to 207,082 metric tons. In 1896 they amounted to 153,501 metric tons; in 1895, 136,591; in 1894, 53,244; in 1893, 6,162. Of the production in 1897, Crookston Bros. shipped 96,547 tons, the Constantine Phosphate Co. 82,145, and the Soc. Française des Phosphates, 28,390. The shipments of phosphate rock from Bougie by the Cie. Française des Phosphates de Tocqueville, Algeria, in 1896 amounted to 184 metric tons, in 1897 they were 20,102 metric tons.

A new bed of phosphate is being mined.in Algeria to the west of the Tebessa beds by the Société Anonyme des Phosphates de Oued-Rédir. The product is darker than the Tebessa phosphates, being more like Peace River phosphate. The iron and alumina are low.

M. Chateau published in the *Memoirs* of the French Society of Civil Engineers for August, 1897, an important monograph on the phosphate deposits of Constantine and Algeria. The paper covers 118 pages, and contains a historical account of the discovery of sedimentary phosphates on the high tableland of Algeria, with a description of the geological structure, the nature of the phosphates, and the theory of their formation. The various deposits are described in detail, and particulars are given of the cost of production, the exports, the future of the industry, and the legislative enactments relating to it. The following paragraphs are based chiefly on this memoir:

The sedimentary phosphate deposits in Algeria and Tunis are of Eocene age. They were first discovered in quantity by M. Philippe Thomas in 1885.

The phosphates occur as nodules in marl or as phosphatic limestone. The formations are covered, as a rule, with nummulitic, crystalline limestone. The marl phosphates are not so interesting as the limestone phosphates. They are found in foliated marls, often containing notable quantities of phosphate of lime. They have been exploited only at Jebel Dekma near Souk-Ahras, though without much success.

The limestone phosphates alternate with the nodule marls. They are exploited at Tebessa, at Tocqueville, southwest of Setif, and at Bordj-Redir, south of Bordj-boo-Arreridj. They form a rock at times friable, at times hard, varying in color from yellowish gray to a greenish brown in the neighborhood of Tebessa; near Setif they are black.

The different deposits in the two provinces may be divided into six groups: (1) Those of the region of Tebessa and the Algeria-Tunis frontier; (2) those of the district of Guelma; (3) those of the neighborhood of Aine-Beida and El-Guerah; (4) those of the region of Setif and Bordj-boo-Arreridj; (5) Sidi-Aissa in the department of Algiers; (6) Boghar and Birin in the same department. Groups 1, 2, 3, and 4 are in the department of Constantine.

The town of Tebessa is situated in a neck formed by the valley of Wed-Kebir, which belongs to an important chain of mountains, one of the numerous ramifications of the Auress. The deposits are found on this chain, from Jebel Jerrar, on the south, to Dyr-el-Kef, near the town of Kef, in Tunis, on the north. Considerable outcrops of phosphate are noticeable all along this chain for nearly 176 km.

After describing the various deposits of phosphate rock, which appear to be of considerable extent and promise to yield material assaying as high as 66% phosphate of lime with less than 1% of oxides of iron and aluminum, but have not yet been opened on account of their remoteness from roads and railways, M. Chateau describes those deposits which are now being exploited. Of these the Jebel-Kouif, which is being worked by the Constantine Phosphate Co., bridges over the Algeria-Tunis boundary, with the principal part in Tunis. It is 27 km. from Tebessa. There exists here a single bed of phosphate which sometimes attains a thickness of 6 m. and seems to have a periphery of about 18 km. The rock when first broken has a gray appearance, but whitens on contact with the air. The hard rock contains from 58 to 65% calcium phosphate and the soft from 65 to 72%. The exploitation is carried on open-cast. The mine is connected with Tebessa by a branch line of railway 33 km. in length. The company pays the original grantee a royalty of 1.5 fr. per ton shipped.

About 7 km. north of Tebessa is the exploitation of the French phosphate company which is working the deposit of Jebel Dyr. These mines are connected with Youks-les-Bains by a narrow-gauge railway of 9 km. length. The phosphate beds have an aggregate thickness of 12 to 17 m. The principal one, which is about 3 m. thick, contains only 50 to 52% calcium phosphate in its upper part. This material is not mined. In general the phosphate rock of the Jebel Dyr averages from 55 to 69% of calcium phosphate, the soft material reaching 73%. The rock assaying more than 63% is generally very pure, not containing more than 1% of iron and aluminum oxides. Though not so ideal a material for the manufacture of superphosphates as is the rock of the Setif region, it is very readily attacked by sulphuric acid, and gives a superphosphate with from 12 to 15% of soluble phosphoric acid. Owing to the low tenor in iron and alumina the superphosphate does not undergo reversion. Beside those of the French company phosphate deposits on the Jebel Dyr are exploited by Crookston Bros., of Glasgow. Both these companies mine under ground. In the Crookston workings the rock brought to daylight is divided into two classes, one with 58 to 63% calcium phosphate and the other with 63 to 70%. The Crookston mines are connected with the railway 16 km. distant by a branch line. They are worked to produce an average of 200 tons per diem.

A little to the north of the Crookston exploitations are those which were undertaken by Bouillon, Berthier & Co., of Paris, and were discontinued on account of legal difficulties with the government.

The deposits in the region of Setif and Bordj-boo-Arreridj are the least known of the Algerian, but in the opinion of M. Chateau are the most interesting. He thinks that this region will become the mining center of the province, the phosphates being rich and the deposits well situated from a commercial standpoint. When exploited they will be shipped from the port of Bougie. The freight charges of the East Algerian Railway, however, are higher than those of the Bona-Guelma line. The cost per ton from Tebessa to Bona (225 km.) is 7.20 fr.; from Tixter to Bougie (189 km.) it costs 9.90 fr.

The Tocqueville Phosphate Co. has begun the exploitation of some deposits in the vicinity of the town of Setif, producing a rock with 48 to 50% calcium phosphate for local consumption. The important deposits of the region, however, lie to the west of Setif in the Ooled-Mahalla dooar, south of the Hamman Station on the East Algerian Railway. M. Chateau estimates that there are 10,000,000 tons of phosphate in this dooar. His samples assayed from 68 to 74% calcium phosphate, with less than 0.5% ferric oxide and alumina. West of the dooar of Mahalla there are deposits of similar character in the dooar of Larba, where the Tocqueville Phosphate Co. is operating. Its product assays from 60 to 70% calcium phosphate, with 1% iron and aluminum oxides. This company is at present constructing a railway 10 km. long from its deposits to Tixter. M. Chateau estimates that there are nearly 3,000,000 tons of 55 to 70% phosphate in the dooar of Larba.

South of Mahalla the dooar of Aine-Ksar contains deposits assaying from 58 to 70%. There are also deposits in the dooar of Aine-Titest which do not, however, exceed 55% in grade. At Bordj-Redir two companies begun operations, but the low grade of the phosphate and the long distance from any railway compelled them to cease. At Jebel M'zita, north of Bordj-Redir, there is one bed with 66 to 70% phosphate, but the rest is nearer 50%.

M. Chateau estimates that the phosphate deposits of Algeria, of commercial value, which he has described, contain between 150,000,000 and 200,000,000 tons of phosphate rock with a tenor of 50 to 70% calcium phosphate. He considers, however, that it would be very risky to attempt the exploitation of any deposits with a tenor of less than 63%. Many of the deposits described require branch lines of railway to make them available. The three ports by which phosphate can be exported from Algeria are Bona, Bougie, Philippeville, but the railroad facilities are wretched at present. The East Algerian line cannot even carry all the crops when there has been a good season for the farmers. This difficulty will have to be removed very soon if the phosphate industry of Algeria is to receive any advance.

At present, however, there does not seem much prospect for an amelioration of these conditions. On the contrary the present tariff for transporting phosphate on the Bône-Guelma Railroad of Algeria will probably be increased. The existing rate from Tebessa to Bône is 72 fr. per metric ton. It is proposed to increase it to 84 fr. The phosphate companies have protested against this, asserting that it will prevent the exploitation of the phosphate beds having a content below 60% tri-basic phosphate. Toward the end of the year a combination was formed between Messrs. Cookston Bros., the Constantine Phosphate Co., and La Société Francaise des Phosphates de Tebessa for the purpose of holding up prices.

M. Dugast, who has also studied and described the phosphate deposits of Algeria, states* that the cost of production of rock delivered on board ship at Bône is 14 to 15 fr. per ton and 25 to 29 fr. per ton ex-ship at Marseilles.

Belgium.—The manufacture of superphosphate in this kingdom is controlled by a syndicate of which all but three concerns are members. The production for the season of 1896–97 (autumn of 1896 and spring of 1897), was 224,000 metric tons, of which the three independent works furnished 26,000 tons and the 24 syndicate works the remainder. The syndicate prices for Liege phosphates established at the end of the year were as follows: 60 to 65%, 0.52 fr. per unit; 55 to 60%, 0.46 fr.; 50 to 55%, 0.36 fr.; 45 to 50%, 0.30 fr.; and 40 to 45%, 0.25 fr. These prices hold good only when the average selling price of superphos-

---

* *Revue Generale des Sciences*, Oct. 15, 1897.

phates is 0.30 fr. per unit. If superphosphate falls one point, phosphate falls two points. *Le Phosphate* thinks the producers cannot stand this schedule, because the net cost of producing Liege phosphate averages at best 25 fr. per ton.

Sweden.—The phosphate production of Sweden is made in the form of apatite. An interesting process for the treatment of this mineral is now being tried in the kingdom, the results of which will be awaited with interest. The advantage of Thomas slag over natural phosphate rock consists in the greater solubility of the phosphoric acid, which is combined with the lime as tetrabasic phosphate, a weaker union than the tribasic form. Attempts to convert tribasic phosphate of lime into the tetrabasic phosphate by mixing apatite and calcium carbonate have failed, since the combination takes place only at 1700° C. If, however, in place of the calcium carbonate, an alkaline carbonate is used, the combination takes places at 700° C., and a product with about 30% phosphoric acid is obtained, that is to say, about twice as much as there is in Thomas slag. This method, which is due to Wiborg, forms the basis for the treatment of certain Swedish iron ores that, owing to the large admixture of apatite, have hitherto been unavailable for iron smelting. A plant to treat 150,000 tons of ore per annum has just been put in operation on Swartö Island. The treatment consists in the magnetic separation of the ore and apatite, purification of the apatite by further dressing, and conversion of the apatite into tetrabasic phosphate. The last is accomplished by furnacing the clean apatite, finely ground, and previously dried in a cylinder furnace, with a mixture of soda in a two-hearth reverberatory furnace, similar to those which are used at Falun for the chloridizing roasting of copper ores. The mixture is heated to bright red heat, at which temperature it frits somewhat, and after withdrawal from the furnace is finely ground and goes directly to the trade. The iron ore goes to the blast furnaces.

THOMAS OR BASIC SLAG.

A serious competitor of the natural phosphate rock is found in the Thomas or basic slag, which is produced in rapidly increasing quantity, especially on the continent of Europe. The production of this material in 1896 was approximately as follows: Rhenish and Western Provinces of Germany, 325,000 metric tons; Belgian Rhenish Provinces, 170,000; France, 250,000; Sarre, Moselle, and Luxemburg, 300,000; North Germany, 80,000; England, 200,000; other countries, 200,000—total, 1,525,000 metric tons. This is about the equivalent of 800,000 tons of high-grade phosphate rock. During 1896 there were 83,765 tons of Thomas or basic slag imported into Germany, while the exports, chiefly to Belgium, were 134,257 tons. The fertilizer manufacturers now use large quantities of this slag instead of buying imported phosphate rock, and the total consumption of basic slag in Germany in 1896 was estimated at 800,000 tons.

PHOSPHORUS.

THE properties and preparation of this substance were described fully in THE MINERAL INDUSTRY, Vol. II., to which reference should be made. Mention was made in that article of the Readman-Parker electrolytic process of manufacture, which had not at that time been applied on an industrial scale. During the five years since elapsed, however, this process has found extensive application and has practically displaced the methods of manufacture previously in use.

The electrolytic phosphorus process was developed in England at the works of the old Cowles syndicate by Dr. Readman, who subsequently united with Parker and sold the perfected process to Albright & Wilson, who practically control the English and American trade in phosphorus. This firm in 1897 built works employing 300 h. p. at Niagara Falls, and began the manufacture of phosphorus there, linked probably by a contract with the Diamond Match Co. Previous to last year the Diamond Match Co. was in antagonism with Albright & Wilson and secured its supply of phosphorus from J. J. Allen's Sons of Philadelphia, who made phosphorus by the old process. Albright & Wilson by adopting the electric smelting process so cheapened the cost of production that it was able to ship phosphorus from England, pay duty, and sell cheaper than J. J. Allen's Sons; hence the Diamond Match Co. was undoubtedly compelled to come to the agreement with Albright & Wilson which resulted in the erection of the plant at Niagara Falls. The Diamond Match Co., being practically the sole consumer of phosphorus in the United States, there is not much chance for a producer who does not stand in with it. The average price of phosphorus in wholesale lots in New York during 1897 was 52.5c. per lb.

The chief use of phosphorus is in the manufacture of lucifer matches. The death of Sir Isaac Holden recently excited a good deal of discussion as to the credit for this invention, and though it is doubtful if the priority of invention can be claimed rightly for him, the development of the industry was certainly due to him. Phosphorus matches were first introduced on a commercial scale in 1833, and the first United States patent for friction matches was issued in 1836. The present "safety" match was invented by a Swede named Lundstrom, in 1855. The so-called "parlor" match was invented in 1848 and originated with the manufacture of Schrotter's amorphous phosphorus, which is odorless and tasteless, is not poisonous, and does not take fire at ordinary temperature.

A comparatively small amount of phosphorus is consumed in the manufacture of phosphor bronze. Max H. Wickhorst[*] states that the phosphorus added to bronze to deoxidize the metal may be introduced as phosphorus or as a high phosphorus alloy, called "hardener." The latter contains 6% P, with copper and tin in the ratio 8 : 1. It is made by melting 90 lb. of copper and adding 11 lb. of tin. Seven pounds of phosphorus are put into a dilute solution of blue vitriol, until coated with metallic copper, which protects the phosphorus when it is dried in the air. After drying, the sticks of copper-plated phosphorus are introduced into the melted bronze, two or three at a time, and held below the surface of the metal by a cup-shaped tool.

Several new processes for the electrolytic preparation of phosphorus were described during 1897. According to one of them, patented by Hermann Hilbert and Albert Frank,[†] it is proposed to make phosphorus and calcium carbide at the same time from calcium phosphate in the electrical furnace, employing the following reaction:

$$Ca_3(PO_4)_2 + 14\ C = 3\ CaC_2 + 2\ P + 8\ CO.$$

The phosphorus distilled off is condensed by appropriate devices.

L. L. Billaudot describes the following method:[‡] Metallic phosphates are reduced by carbon in an electric furnace to phosphides, whereby a carbide is also formed. Calcium and aluminum phosphides are obtained by the following reactions:

$$(PO_4)_2 + 8\ C = P_2Ca_3 + 8\ CO.$$
$$2(AlPO_4) + 8\ C = P_2Al_2 + 8\ CO.$$

These phosphides, or phosphides obtained otherwise, as for example the iron phosphide which is sometimes produced in blast furnaces, yield phosphorus by a further reduction with carbon in the electrical furnace according to the reaction:

$$P_2Ca_3 + 6\ C = 2\ P + 3\ CaC_2.$$

In a paper read before the German Electro-Chemical Society Liebmann gives a description of a distilling furnace which is in use in Frankfort and has proved to be very satisfactory. With a mixture of calcium phosphate, carbon and sand, or kaolin, he distilled phosphorus which was very pure, and it is claimed that 86% was recovered. A high temperature is necessary in carrying out the process on a commercial scale and for obtaining such a high percentage.[§]

---

[*] *Journal American Chemical Society*, X., pp. 893-895.

[†] D. R. P. No. 92,838, Sept. 19, 1895.

[‡] English Patent No. 15,977, July 18, 1896.

[§] *Zeit. f. Elektrochemie*, July 5, 1897.

PLATINUM.

THERE is generally a small production of platinum to be reported in the United States, the metal being recovered at the San Francisco and Philadelphia Mints in refining gold bullion from certain placer workings in California. In 1896 the production amounted to 200 oz. troy, and in 1897 to about the same amount. There was no production of platinum from Canadian matte, which contains a considerable percentage of it, and is a probable source of supply in the future (see article "Nickel and Cobalt"). The production of platinum in Russia is supposed to have fallen off considerably in 1897, but in Colombia there was an increase. There are no official statistics for the latter country, but according to our private information the production in 1897 was 11,700 oz. troy, against 10,320 oz. troy in 1896. The price of platinum increased materially, owing to the diminution of supply and the increased demand, largely for use in Welsbach mantles, in which a comparatively large amount of platinum is now consumed. Refined platinum, in large quantities, can hardly be obtained at the present time for less than $15@$16 per oz.

THE OCCURRENCE AND TREATMENT OF PLATINUM IN RUSSIA.

BY HENRY LOUIS.

AS IS well known, practically the whole of the world's output of platinum, or at any rate over 95% of the whole, is produced in a comparatively small area in the Oural Mountains. It was first discovered in 1819 in admixture with gold in the placers of Verk-Isetsk, and it was only six years later that true placers of platinum, which produced that metal with but little gold, were discovered in the mining district of Goroblagodatsk and Nishni Tagilsk. At that time the metal had but little value, and its uses being unknown and the difficulties of treating it practically prohibitive, the output was but trifling. In 1828, however, the Russian government commenced the minting of platinum coins of the value of three, six and 12 rubles, and continued to issue these up to 1845. The production of platinum in Russia had been very small up to the former date, when it rose rapidly up to 1843, in which year 110,790* oz. troy were obtained; it then again fell

---

* The poud may be taken as equal to 526.6 oz. troy.

off, and in 1845, when the coinage of platinum was stopped, it dropped very rapidly indeed. During the period of the coinage of platinum the government minted 950,000 oz., or 4,250,000 rubles in value. After the coinage of platinum ceased the production dropped so low that up to 1852 only 60,000 oz., or thereabouts, were obtained in eight years. The production then began to rise, and for the next 10 years or so was about 40,000 oz. a year; this improvement is said to have been due to the fact that about this time the London firm of Johnson, Matthey & Co. had entered the market as a purchaser of platinum. Up to 1890 the total output of platinum from the Ourals is given as 3,356,250 oz. troy. The output in the subsequent years was as follows: 1891, 132,350 oz.; 1892, 142,750 oz.; 1893, 163,920 oz.; 1894, 167,480 oz.; 1895, 141,930 oz.; 1896, 158,500 oz. So that the total production of platinum in the Ourals from the time of its discovery up to the end of 1896 may be taken to be about 4,250,000 oz., according to official statistics.

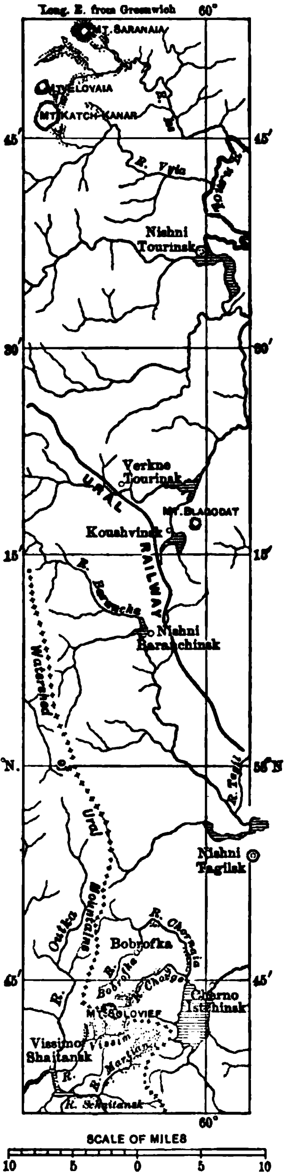

The whole of the platinum-producing portion of the Oural Mountains is contained within a length of about 80 miles along the central portion of the mountain chain, and is all included in the Government of Perm. There are two chief districts, Goroblagodatsk in the north and Nishni Tagilsk to the south, Ekaterinburg being the seat of the mining administration to which both these districts, together with a very extensive area of the Ourals, are subject. The platinum placers occupy the valley bottoms of a number of small streamlets and their branches, the alluvials in the larger streams being rarely worth working. In the Goroblagodatsk district the majority of the mines are owned by Count Shouvalof and by a number of companies, in which the Messrs. Bourdakof play an important part; the Nishni* Tagilsk mines belong exclusively to the family of the Demidoffs. Platinum placers also exist at Verk-Isetsk, Cherno Istochinsk, Kyttim, Solva, and a few other localities, and platinum mixed with gold has been found in placers at Slatoust, Ekaterinburg, certain affluents of the Toura, and a few other places. The two main districts are shown on the accompanying map. The Goroblagodatsk district lies entirely on the Asiatic side of the Ourals; the chief river system that carries platinum is that of the Iss and its affluents, the river Iss in its turn falling into the Toura. The Iss rises mainly from the northern flanks of Mount Katch-

---

* Verkne means headwaters, Nishni the lower course of a stream.

kanar, and receives several tributaries that descend from Mounts Saranaia and Elovaia; the height of the first named of these mountains is given as 2,850 ft. The total length of this stream and its platiniferous affluents is about 60 miles. Some of the streams which, rising from the southern side of Mount Katchkanar, flow into the river Vyia on its left bank, also contain workable platinum placers, but most of those on the Vyia proper are too poor to be exploited profitably; the Vyia like the Iss flows into the Toura.

In the Nishni Tagilsk district the majority of the placers now worked are situated on the European side of the mountain axis, in the river systems of the Vissim and the Martian. These streams rise mainly from the western and south western sides of Mounts Solovief and Varaliof, and flow, the first named directly into the Outka, and the second into the Shaitanka, which in its turn empties itself into the same stream. On these streams and their branches there are at present 18 platinum placers in operation; there are also three on the Asiatic side of the Ourals, where the occurrence of platinum is confined to the river Chornaia and its affluent, the Chouge. These rise on the northerly side of Mount Solovief and flow eastward, falling finally into the Tagil. The relative importance of these streams may be gauged by the following statement showing the amount which each has contributed to the total production of the Nishni Tagilsk district from the commencement of operations there up to the end of 1895: Martian River system, 1,601,000 oz.; Vissim River system, 921,600 oz.; Shaitanka River system, 55,300 oz.; Chouge River system, 64,800 oz.; other areas, 260,840 oz.; obtained from gold placers, 8,560 oz.—total for Nishni Tagilsk district, 2,912,100 oz. During the same period the other important platinum mining districts of the Ourals produced: Goroblagodatsk, 843,000 oz.; Count Shouvalof's mines, 274,000 oz.

For 1895 the production of the different districts is given officially as follows: Nicolai Pavlinsk (owner Ignatief), 1,930 oz.; Nishni Tagilsk (owner Demidoff), 33,355 oz.; Krestovozdvichensk (owner Shouvalof), 20,800 oz.; others (including Goroblagodatsk), 85,855 oz.—total in the Ourals, 141,930 oz.

The geology of this region is still imperfectly known; the platiniferous alluvial is very variable in thickness and in richness, but is always shallow, the placers being undoubtedly of quarternary age; the bowlders consist wholly, or almost wholly, of diorite, gabbro, diallage and olivenite, the latter always more or less serpentinized. Those placers which carry gold in addition to platinum generally show an admixture of quartz bowlders, while those gold placers that carry, as some do, a small amount of platinum always show bowlders of serpentine. The whole of the above named mountain masses from which the platiniferous streams take their rise appear to be characterized by the presence of olivenite, and of the serpentine which is one of its decomposition products; both the olivenite and the serpentine contain grains, and sometimes larger masses, of chromite. The obvious conclusion from these facts is, firstly, that the simultaneous presence of gold and platinum in one and the same placer is, so to speak, accidental, and due merely to the fact that the stream which formed the placer, received the products of disintegration of rocks containing gold and of rocks containing platinum, but that these metals did not occur together in primary deposits. Secondly, the original source of gold appears to be traceable here as elsewhere to quartz veins or to rocks of an acid type, for example granite or beresite, while the platinum is derived from basic rocks rich in magnesia. The proof of the occurrence of platinum in rocks of this type no longer depends upon purely inferential considerations, for platinum finely disseminated has actually been found *in situ* in such rocks. For instance, Prof. Inostrantef discovered platinum in 1892 finely disseminated, together with chromite, in serpentinous rock in the Nishni Tagilsk district, and other geologists, among them M. Stanislas Meunier, have corroborated this discovery. Moreover, a so-called vein of platinum has actually been worked in the above district; this was not a true vein, but seems to have been a streak of decomposed and highly serpentinized olivenite in massive olivenite; this streak was about 6 ft. wide and was followed down to about 35 ft., at which depth it was no longer workable. The stone obtained was crushed and washed, and is said to have yielded about 15 dwt. of platinum to the ton. The matrix of platinum in the Ourals may therefore be said to have been placed beyond doubt; its mode of origin is still, however, obscure. On the one hand Prof. J. H. Vogt looks upon it as having been formed by magmatic segregation from the igneous rock, and groups its occurrence with that of native iron at Disco, Greenland, while M. Stanislas Meunier has demonstrated that a similar platiniferous rock mass, showing marked analogies with the composition of meteorites, can be produced artificially. On the other hand it does not yet seem to be certain that platinum has been found in the perfectly fresh igneous rock that had not yet undergone any decomposition or serpentinization, hence there is always a possibility that the same agencies that brought about the conversion of the olivine into serpentine also introduced the platinum into the rock. Neither theory, however, will serve to account for the fact that the rocks in this small area of the Ourals are rich in platinum, while similar rocks elsewhere do not contain even traces.

The latest complete government statistics show that in 1894 there were 97 placer mines at work producing platinum, of which 12 were really gold placers, the platinum obtained being only a subsidiary product. The amount thus produced was 2,409 oz. The remaining 85 platinum placers produced in that year 165,072 oz. of platinum, as the result of washing 1,637,000 tons adv. of platiniferous alluvium; the average richness was thus 2 dwt. of platinum (crude platinum is always meant) to the ton, the minimum and maximum reported being 1 dwt. 1 grain and 5 dwt. 2 grains respectively.

The thickness of the respective layers of overburden and platiniferous alluvium are also recorded, and are as follows: Overburden: Maximum, 63 ft.; minimum, 2 ft. 6 in.; average, 16 ft. Pay gravel: Maximum, 6 ft.; minimum, 1 ft.; average, 3 ft. 6 in. One of the most striking facts connected with these placers is the diminution in the yield of platinum to the ton of gravel washed within recent years. Government statistics concerning the quantity of gravel treated have only been kept since 1887, but private records are available in both the Goroblagodatsk and the Nishni Tagilsk districts. In the former district the richness of the sands treated in 1870 is given as 1 oz. to the ton, but this is about double the average of the years 1870 to 1880, given as about ½ oz. per ton. In 1882 and 1883 the richness was about 9 dwt.; in 1884, 7 dwt. 8 grains; in 1885, 6 dwt. 5 grains; in 1886, 4½ dwt., and so on, until in 1895 the average is given as barely 1½ dwt. per ton.

In Nishni Tagilsk enormously rich gravels were worked at first, the average for the years 1825 to 1829 being as high as 48 dwt. per ton, the highest record being 68 dwt. to the ton in 1828. Up to 1838 an average of about ½ oz. to the ton was maintained, and though this dropped considerably in the slack time that then ensued, we find 15 dwt. recorded again in 1849. From 1850 to 1883 an average of about 7 dwt. to the ton was kept up, the richness fluctuating considerably, with on the whole a downward tendency, but never falling as low as 3½ dwt. to the ton, a figure that was touched in 1884; thenceforward the tendency is a continually falling one, until in 1895 an average of only 1½ dwt. to the ton is shown; in this district, as in the previous one, the gravels treated in 1895 seem to have been markedly poorer than in any previous year. This progressive impoverishment is obviously due to the fact that at the outset only the small, shallow, and very rich placers at the headwaters of the smaller streams were worked; as these were exhausted, gradually poorer and poorer deposits further down stream had to be attacked, till now there is nothing left but the more extensive, low grade placers in the larger valleys and the tailings of the earlier washings.

Crude platinum, as obtained by washing the gravels, is in the form of fine particles, grains, and scales, of about the size of the finest gunpowder, its color varying from light to very dark gray. Although generally fine, nuggets of platinum are occasionally met with; some have been found, but none of any importance, in recent years, as they were naturally obtained in working the richer shallow placers near the heads of the valleys; the largest found in the Goroblagodatsk district was 72½ oz., and in the Nishni Tagilsk, 310 oz. The occurrence of nuggets cannot be looked upon as subversive of the theory that platinum placers are entirely due to the degradation of serpentinous rock containing the metal disseminated through it. It is quite intelligible that large particles or masses of the metal may occur in the rock itself, while it must not be forgotten that platinum when finely divided shares with many other metals the property of welding under pressure even at atmospheric temperatures, so that there is no difficulty in understanding how a mass of particles of platinum, accumulated in some hollow in the bed rock, may gradually become welded into a solid piece under the influence of the pressure of the superincumbent strata.

It may be added to the above statistical data that the surface area of the 85 placers mentioned is about 110,000 acres, and that the number of men employed in 1894 was 5,546; this latter figure seems, however, only to include those who were working on day wages.

In order to work a platinum placer in the Ourals a concession must first be obtained in the usual way, whether the land be state property or whether it belong to private individuals. In either case the state collects a tax upon the platinum produced. This is always taken in kind and amounts to 3% of the weight of the platinum got from proprietary lands, and 4½% if got on state lands. For this purpose all the platinum produced in the Ourals has to be sent to the State Laboratory of the Department of Mines at Ekaterinburg, where it is tested for freedom from gold, weighed, and the due proportion retained; the remainder is then returned to the owner with a proper certificate. In this way upon the 141,927 oz. of platinum got in 1895 the state levied taxes to the amount of

4,872 oz. (3.43%); the bulk of this was sold at St. Petersburg in October of that year, at a price of about $8 per oz. In addition to the direct payment in kind, a tax upon the area of the concession, and certain other taxes, fees for assaying, stamp dues, perquisites to various officials, etc., have to be paid, the value of which amounts roughly to as much again, so that it may be fairly estimated that crude platinum pays about 7% of its value in the form of taxes.

The method of working the placer gravels is everywhere identical; it must be premised at the outset that there are two different labor systems in force in all the alluvial workings of Russia which merit some attention. The men are either day laborers, receiving regular wages, or they are *starateli* or free laborers. The latter are what the Cornish miner would call tributers; they are allowed to work certain portions, or in some cases the whole of a placer, practically as they please, and are in return bound to sell the platinum they produce to the individual or company owning the placer, at a fixed price. This price is generally $3 to $3.35 per oz., or less than half its value. These *starateli* usually work in parties of from three or four to 10 or 12, and though they are supposed to be watched they have evidently ample opportunity for concealing a part of their day's find, even if the large admission were made that the watchmen were not accessible to bribery. There seem to be plenty of persons ready to buy the stolen platinum, and much of the metal thus not only never reaches its rightful owners, but also avoids paying duty to the state. That this is the case seems almost certain when it is noted that for a series of years the annual export of platinum has been from 10 to 20% higher than the gross production,* while no doubt much of the stolen metal is smuggled out of the country to prevent its being traced.† Probably the actual output of platinum in the Ourals is fully 25 or 30% higher than is shown in the official returns. In addition to the direct loss thus inflicted on the owners, the damage done to the placer by the random and capricious mode of working of the *starateli* must be taken into account. On the other hand these men make by far the best prospectors for platinum, and they are also said to be able to work gravels too poor to be worth working by day wages; whether the poorness of such ground is apparent or real, reported or actual, does not seem very clear. The general rate of day wages is from 30c. per day for an inferior worker to 46c. per day for first-class men, or 56c. for a man with his horse. The mode of payment is sometimes by yardage; thus a very usual price is 7c. per cu. yard for getting pay gravel, and about half that price for stripping overburden. A good man can work about 6 cu. yards of the former and 12 cu. yards of the latter per day. These prices do not include haulage, which would in such cases be done by means of horses and men employed by the owners. When a contract price is given for getting and carting, it is usually about 8c. per cu. yard for overburden

---

* In 1896 the export was, however, less than the production; it is given as 151,135 oz. The export for the first six months of 1897 is given as 67,930 oz.

† A case recently tried before the district court of Ekaterinburg, arising out of the theft of platinum amounting to several million rubles, disclosed the fact that about a quarter of the total output of platinum in the Ourals had been stolen. It appeared that a merchant named Amziferow, who was producing about 2 pouds of platinum from a mine of his own, had been shipping a much larger amount, which attracted suspicion. Inquiry showed that a large part of this came from the mines of Prince San Donato, the total output of which was supposed to go to England. At the trial it was developed that the foreman and workmen of the San Donato mines competed with each other in stealing and supplying the booty to Amziferow. The same procedure took place in other mines and it was thus explained how it was possible to export yearly about 100 pouds of platinum more than was registered in the mining department.—[Ed. Mineral Industry.

and 12c. per cu. yard for pay gravels. Women and lads, who are largely employed about the washing machinery, get respectively 26 and 20c. per day.

The method of working adopted by the *starateli* is simple in the extreme; they establish a short sluice-box or "tom" in some position where they can run a stream of water into the head of the box. There is usually a small pond above the box that acts as a reservoir, and the water is led from this to the head of the box by a small trench, which generally has some form of crude gate; there is generally also a small rough grizzly at the head of the box, the latter being set at a high grade, say 10° to 15°. The gravel is excavated by hand and run in wheelbarrows to the box-head, where it is dumped in and worked about by means of shovels or hoes; the bowlders and pebbles are thrown out and the sand alone allowed to enter the sluice; the concentrates thus obtained are rewashed at intervals upon a small flat table similar to that to be presently described. Clean platinum sands are thus obtained. The platinum is mostly fine and scaly, nuggets being very rare. If flour platinum occurs in these placers, it is not caught and is not likely to be caught either in this or any other method of washing now in use in the Ourals. The sluicing process of the *starateli* is extremely crude and rudimentary, and decidedly inferior to that employed by many tribes and nations much below the Russians in the scale of civilization. In this, and all other methods of washing the platiniferous gravels, the tailings are always allowed to remain on or near their original site, and after a few years these gravels will be worth rewashing; some are said to have been washed as often as 30 times. It is doubtful whether this phenomenon is due to bad washing that allows a great percentage of the metal present to escape, or whether it is due to the liberation of fresh particles of metal by the disintegration of the rock through which it is disseminated. Should the latter explanation be the correct one, it would seem that stamping and washing the rock should yield better results than waiting for the slow process of natural disintegration.

It is stated that *starateli* are able to work gravels yielding only about 20 grains of platinum to the ton, and worth therefore only 13c. per ton to them.

The sands in the actual beds of the rivers Iss and Tagil carry platinum, and are got by dredging. The dredge consists of a narrow raft about 35 ft. long, with an opening about 18 in. broad and 20 ft. long in the middle; through this passes a hand dredge, consisting of a scoop made of iron plate, 1 ft. square, attached to a stout pole about 16 ft. long. A windlass is placed at the head of the raft, a rope from it being attached to the bottom of the pole that carries the scoop. One man standing on the raft manages the pole and thus guides the dredge, while a couple of men at the windlass haul it up stream, getting up at each time a scoop full of gravel. By this means from 10 to 15 tons of gravel can be raised in one day; the material so obtained is washed in the ordinary way.

When the work is done on a larger scale, either by a very large company of *starateli*, or more usually by the mine owners, washing machines are built and the pay gravels are brought to them in small carts drawn by one horse; tram-lines and wagons do not seem to be used in the platinum diggings, though they have been introduced in a very few of the gold placers.

Each of these carts carries from 6 to 8 cwt. of gravel, or is of about 9 cu. ft. capacity. They are either four-wheeled or two-wheeled, the latter being the more convenient for dumping and more commonly used. An inclined plane of timber is always constructed up to the head of the washing machinery at such a grade that these carts can be drawn up by the horses; this plane terminates in a platform on which the gravel is dumped and which is furnished with hoppers through which it is dropped into the washing machine. The latter are either driven by power or are simply sluices.

One of the most usual types of sluice, known in the Ourals as the "American" (Fig. 1), consists of a box *C* about 2 ft. wide, into which the gravel is dropped and through which a current of water is run, the quantity of the latter being regulated by means of gates. The stream of gravel and water is carried into the sluice proper, consisting of a box *A*, about 2 ft. wide and 30 ft. long, set at a comparatively flat grade (5° or less). The far end terminates in a chute *D*, placed at such a height above the ground that a cart can stand under it. The bottom of the sluice is paved with hoop-iron riffles, made by bending light bar iron (about ⅛×2 in.) into the shape shown in Fig. 1; the interstices of these iron riffles soon fill up with small pebbles and form a very efficient means of catching heavy sands. At intervals of about 7 ft. apart there are three openings *B, B′, B″*, of the full width of the box by about 9 in. across; these are provided with iron bars ¼ in. broad and ¼ in. apart, so as to let all the finer sand through, while the bowlders and larger pebbles pass on; of course practically all the water makes its way through these gratings, only the larger stones dropping from the previously mentioned terminal shoot into carts placed to receive them. Beneath each little grating runs a transverse box *E*, the bottoms of which are covered with coarse matting, held down by shallow wooden riffles about ¾ in. deep; these three boxes deliver into a trough *F*, which is also at times lined with riffles, but which lies at a somewhat steeper angle than the others; this last trough carries the sands now supposed to be worthless into a settling box *G*, whence the muddy water runs off through the ditch *H*. The front side of the box *G* is made sloping, and can be raised or lowered by means of movable planks, so as to allow of the sands being readily shovelled out into carts. The whole arrangement is built of rough plank and is carried on massive trestlework. It will be seen that this sluice is really the hydraulic miner's sluice, undercurrent, and grizzly in miniature, and requires a considerable amount of labor to effect what in the larger form is done automatically. The men or boys leading the carts dump them into the hoppers as cleanly as possible, but one or two men are usually kept busy on the dumping platform, scraping up and getting all the gravel fed regularly into the hoppers.

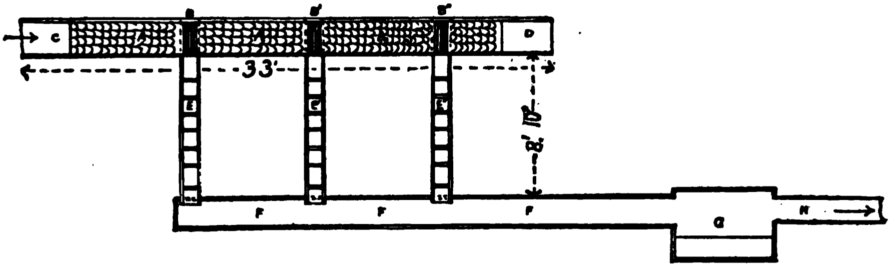

FIG. 1.—SKETCH PLAN OF SLUICE.

There is one man at the head of the sluice-box regulating the supply of gravel and water; a foreman and two or three lads attend to the main and cross sluices; there is one man at the bowlder chute and one at the sand-box; the carters who are carting away stones and tailings load their own carts. The concentrates collected in the riffles and mats are cleaned up every 12 hours; their subsequent treatment will be described below.

This machine is a favorite whenever enough water at a sufficient elevation is available, as it works without requiring motive power, uses relatively little labor, and is cheap both to build and to operate. It is said to treat 130 to 150 tons of gravel, containing but little clay, in 12 hours, but to require a great deal of water. Gravel containing only 41 grains of platinum to the ton is said to be rich enough to be workable at a profit in this sluice. In some places this sluice is combined with a simple machine for disintegrating clayey gravels.

There are two forms of washing machine, both of which have to be driven by power, for which steam is the almost universal agent; wood is cheap and very abundant, and semiportable engines burning wood are largely used. The first type of machine is especially adapted for washing gravels containing much clay, the second type for gravels that are not apt to agglomerate to any great degree and hence for rewashing gravels that have already been washed.

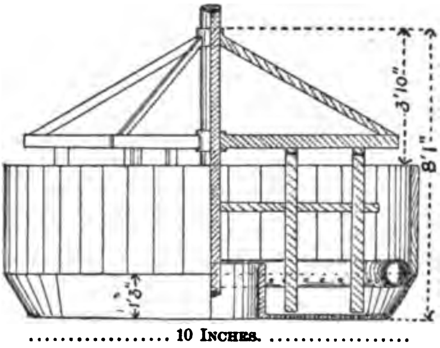

FIG. 2.—ELEVATION OF PUG-MILL, RIGHT HALF IN SECTION.

In the first-named machine the gravel is dumped into a chute about 2 ft. 6 in. wide that leads into a circular cast-iron pan (Fig. 2), the bottom of which is pierced with $\frac{5}{8}$-in. holes; around the top of the pan runs an annular cast-iron pipe, perforated so as to allow water in small jets to play into the pan. The pan is continued upward by a rim of plank about 3 ft. deep; in the center is a vertical shaft carrying a six-armed spider, from each of the arms of which hang a couple of iron bars that almost touch the bottom of the pan. The shaft is revolved at about 25 revolutions per minute, and the gravel is fed in continually; the large stones that remain in the mill are removed from time to time, while the sands and clayey matter suspended in water pass through the perforated bottom and fall upon a sloping board covered with stout sheet iron, which directs the stream toward the back part of the sluice-box, which is identical with that to be next described. A section of the bottom of the pan is usually hinged so as to enable the stones remaining in it to be discharged into a chute which delivers them to the carts. Such a pan requires an engine of 10 to 15 h. p. to drive it, and can treat as much as 200 tons of gravel in 24 hours.

The form of washing machine that is most used is shown in vertical section in Fig. 3, all details of construction being omitted. The carts arriving on the usual platform discharge their contents into two chutes which deliver each into an inclined trommel *A*, *A'*, about 10 ft. long, made of stout sheet iron and pierced with ⅛-in. holes. Sometimes these trommels are fitted with a fixed central axis with projecting teeth, so as to break up more thoroughly the material charged in; a stream of water is always directed into the upper end of the trommels. The sand, clay, and water pass through the holes in the trommels, while the bowlders drop out at the lower end into chutes, whence they are carted away. The sands drop into a large box *B*, the front of which is closed by means of a strong wooden grating *C*, kept always padlocked while the machine is in operation; the sides of the box, as well as the bottom, which, as shown, has a grade of about 15°, are all lined with iron. The box is about 8 ft. wide, but it—as well as the entire length of the washing tables—is divided lengthwise by a board, so as to form practically a pair of tables 4 ft. broad lying side by side. The greater portion of the table that forms the floor of the box *B* is laid with stout bass mats, about 2 ft. broad by 3 ft. long, laid lengthwise; these are held in place by stout pieces of wood about 3 in. deep, which are kept in their places by wedges, and act as riffles. Immediately outside the grating is a shallow groove or trough, and the rest of the table *D*, about 17 ft. long, lying at rather a flatter grade than the upper portion, is furnished with wooden riffles and one or two more troughs. At the bottom of the table the sands drop into a wooden chute *E*, which is still at such a height above the ground that the sands can be carried by the stream of water to a low dump about 100 yards away from the machine. Sometimes the sands are carted away.

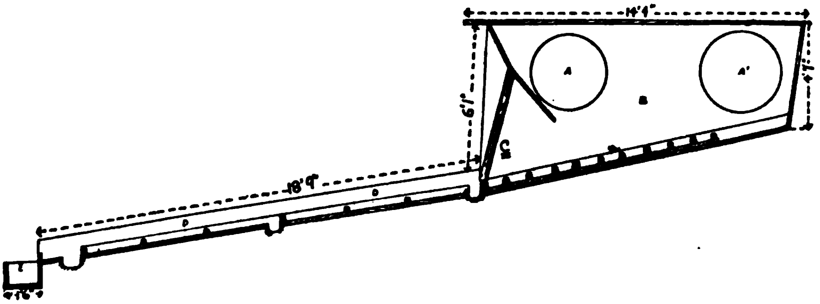

FIG. 3.—LONGITUDINAL SECTION OF WASHING MACHINE.

It is evident that any coarse pieces of platinum or nuggets, which are the most liable to be stolen, will be retained in the padlocked section of the table, while most of the finer platinum sands are also caught on the mats; the lower table *D* is said to catch very little, and this is probably true, but it is certainly no proof that the tailings are clean. The whole arrangement is obviously unsuitable for catching flour platinum, and the fact that none is obtained cannot be taken as evidence that none exists. As far as the writer knows the tailings are never assayed, and certainly there is no systematic method of sampling and assaying at any of the platinum mines of the Ourals. In the absence of such tests, improvements in the method of extraction are hardly to be looked for. This machine requires rather less power than the pug-mill, and will treat about the same amount of gravel, or a very little more, say 100 tons in 12 hours. The machine works day and night, but it must be remembered that these machines can only work here for but little over four months, and very rarely if ever as much as five months in the year. There seem to be seven or eight men, as a rule, engaged on one of these machines, whether of the pug-mill or of the trommel type. The volume of water required is from five to 10 times that of the gravel to be treated. It is said that nothing less than 3¼ dwt. of platinum to the ton pays to work in a steam-driven washing machine.

The clean-up of all of the above-described appliances takes place every 12 hours, at 5 A.M. and 5 P.M., and in the same way. The supply of gravel is stopped, and the water allowed to flow until it runs away clean; then it too is stopped. The riffles of the lower table are taken up and the sands collected, the grating is opened, the upper riffles taken out, and the mats washed and shaken, all the sand in them being collected in the upper trough. These sands are all carried to a small sluice for concentration, the whole of the clean-up being performed under the superintendence of the foreman.

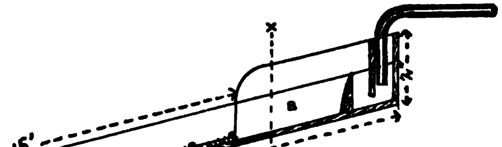

FIG. 4.—LONGITUDINAL SECTION OF CONCENTRATING SLUICE.

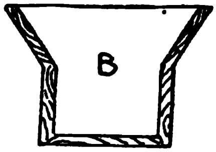

FIG. 5.—CROSS SECTION OF SLUICE ON LINE XY.

The concentrating sluice is shown in Figs. 4 and 5; water is introduced through a pipe *A*, and by passing under and over a pair of baffleboards, placed as shown, a constant head and uniform flow are maintained. The upper portion *B*, the cross section of which is shown in Fig. 5, is lined with sheet iron. The lower portion *C* consists of a narrow box about 15 ft. long, which is laid with well-washed peats, kept down by crosspieces of wood wedged into place and forming shallow riffles. The sands are thrown in small quantities into the portion *B*, and there worked about with a kind of hoe or a narrow shovel, in a carefully regulated current of water; by this means the bulk of the platinum is retained in *B*, the rest being caught in the peats laid in *C*, while most of the lighter material is carried away. The peats are lifted up, beaten and washed, and then replaced, the sands caught in them being washed once or twice more in the same sluice.

The rich concentrates thus obtained, and which seem to consist of little more than crude platinum, chromite, and a few of the heavier minerals present, are finally cleaned on a small flat table or *wash-heerd;* a section of this extremely simple appliance is shown in Fig. 6; it consists of what are really two tables separated by a drop of 2 in. Above the upper one is a small box which delivers a regular shallow stream of water over the whole breadth of the table; the force of the current is just sufficient to move the average-size particles of platinum. The breadth of the *wash-heerd* is about 3 ft. The concentrated sands from the sluice are thrown on the upper table and are continually pushed upward against the current by means of a little wooden hoe about 8 in. broad, shown at *A,* Fig. 6; toward the end of the operation a smaller and lighter hoe is often used. On this table the concentration is finished; the sands are worked with the hoe until fairly clean, and are then allowed to be carried by the stream of water to the lower table, where the washing is completed. The clean platinum sands are then carefully collected off both tables; they are next stirred up with sufficient mercury to dissolve any gold that may be present, this process being several times repeated when the gold forms a considerable proportion of the concentrated sands. The mercury containing the gold is then poured off and washed away, to be subsequently retorted, and the platinum left behind is then ready for the market.

The crude platinum thus produced is generally sold by contract, made sometimes for several years in advance; the selling price at present (1897) in the Nishni Tagilsk district is $7.75 to $8.75 per oz. In its crude state it mostly contains from 75 to 85% of pure metal; it may average rather under 80%; specimens from Nishni Tagilsk have given 73.5 to 83%, from the valley of the Iss 84.2%, and from the Vyia 82.8%. Large parcels treated in Russia gave practically 75.2% and 76.5% in the years 1894 and 1895 respectively. The other constituents are chromite, and sometimes silicious matter, while the metal appears to be invariably alloyed with a small percentage of iron and some iridosmine, which amounts at times to 5%. Other platinoid metals, such as palladium and ruthenium, are also present.

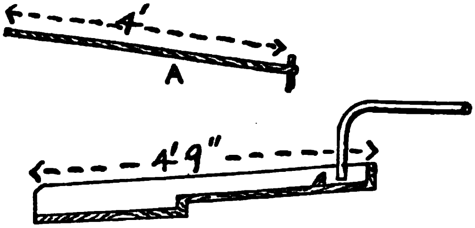

FIG. 6.—SECTION OF WASH-HEERD AND HOE.

The bulk of the produce of Russia is exported in the crude state, and is sold chiefly to Messrs. Johnson, Matthey & Co. of London, Desmoutis, Lemaire & Cie of Paris, and to Heraeus & Co. of Hanau; it is said that the whole annual production of the Nishni Tagilsk district is sold under contract to the first-named firm, which had at one time practically a monopoly of the Russian platinum trade, and still retains the most important share in it. Only a small amount of platinum is refined in Russia, by two firms at St. Petersburg, namely, Messrs. Kolbe & Lindfors and the Tentelef Chemical Works; the former commenced operations in 1875 and the latter in 1887. In 1888 these two firms together refined about 20,000 oz. of platinum, an amount which fell off rapidly and irregularly to about 5,000 oz. per annum. In 1894 the two firms together treated 4,950 oz.; in 1895 they seem to have purchased 13,800 oz., while they are at present treating somewhat over 5,000 oz. annually. Although the Tentelef works were the last established, and then only with the object of manufacturing and repairing the platinum stills and vessels used in their own sulphuric acid works, they now work up about twice as much platinum as the first-named firm. Both firms not only refine platinum, but also manufacture wire, sheet, tubes and foil, as well as all forms of platinum apparatus.

The process used in Russia is as follows: The crude platinum is dissolved in nitro-hydrochloric acid in porcelain basins of about 24 in. diameter, set on a sand-bath. When all action has ceased, the solution is evaporated to dryness, taken up with hydrochloric acid and evaporated again, this process being repeated, if necessary, until all nitric acid has been got rid of. The solution is then filtered from the residue, consisting of sand, chromite, various platinoid metals, etc., this residue being sold to German chemical works, who treat it further for the extraction of the rarer metals. The clear filtrate, contained in large glass cylinders of 1 to 2 gal. capacity, is precipitated by means of ammonic chloride. The yellow precipitate of ammonio-platinic chloride settles rapidly, and when the solution is clear it is decanted off, the precipitate being collected on a disk of stout filter paper supported on a perforated plate, the process of filtration and washing being hastened by means of a filter-pump. The precipitate is thus obtained in a tolerably firm cake, about 15 in. in diameter and 3 in. thick; it is slowly dried, and when perfectly dry is placed in a muffle upon a sheet of stout platinum foil. It is there heated gradually until complete decomposition has taken place, ammonic chloride and chlorine being driven off and a cake of gray, spongy platinum left behind, the heat being ultimately raised to full redness. The sponge is then broken up and compressed in a diamond mortar with a piston about 2½ in. in diameter and 6 in. deep by means of blows from a 10-lb. hammer.

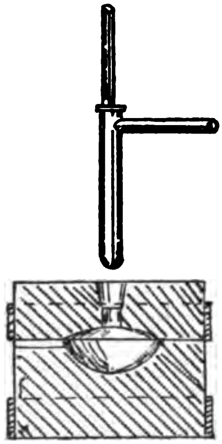
SCALE 1¼ INCH—1 FOOT.

FIG. 7.—SECTION OF MELTING FURNACE.

The compressed blocks so obtained are melted before the oxyhydrogen or oxy-coal-gas blowpipe. The furnace is cut out of sawn blocks of a calcareous tufa which is easily shaped by these means, the blocks being strapped with hoop iron. A small furnace may be cut out of a block, say 8 in. square and 6 in. deep, the furnace having the dimensions and shape shown in Fig. 7, this taking from 100 to 150 oz. of platinum, and worked by means of a single jet. Larger furnaces take up to 500 or 600 oz. and are furnished with two or three blowpipe jets. The furnace rests upon a plate of iron, hinged at one side, and so arranged that the furnace can be tilted up and the metal thus poured into ingot molds made of slabs of the same calcareous tufa strapped together with iron; a large bar may be up to 2 in. in thickness. Each furnace can only be used for one fusion, but they are cheaply and readily constructed.

The solution, after precipitation by ammonic chloride, still contains some platinum which is precipitated by scrap iron, and the impure platinum thus obtained is allowed to accumulate until there is sufficient for refining, which is done in precisely the same way as described above; any platinum scrap and sweepings on hand are treated in the same way.

The bars are pickled in hydrochloric acid, heated to redness, and forged down to about ½ in. thickness; they are then pickled hot, heated again if required, and rolled between a small pair of well-finished, highly polished rolls into foil of any gauge that may be needed; these sheets then require annealing. For making wire the pickled ingot is forged down to a rod about $\frac{3}{16}$ in. square; one end of the rod is then pointed, and it is drawn into wire on a small drawbench of the ordinary construction with the requsite annealing. For making tubes, a piece of sheet platinum of proper size and gauge is bent round a rod and soldered before the oxy-coal-gas blowpipe, and finally polished. For making dishes, crucibles, etc., a round sheet of proper size is cut out, and this is hammered over a series of highly polished steel mandrels, which gradually bring it to the required shape. Between the hammerings it is heated to remove creases. The hammers used are made of ebony, the last hammering being given with steel hammers with highly polished panes to remove all tool marks. The finished vessel is then polished with rags and the finest flour emery, then with paper, and ultimately burnished in a lathe with burnishers of polished bloodstone or carnelian. With careful working platinum can be hammered, spun or drawn into any required shape. The annealing furnace is a small reverberatory furnace, wood-fired, with a flat hearth about 2 ft. square and 6 in. high.

All the cloth, paper, wood, etc., used in the shop is collected, and together with the shop sweepings is burned from time to time; the ashes thus obtained are treated like crude platinum so as to recover their contents of metal. The cost of finished platinum in St. Petersburg is about $15.85 per oz. troy.

POTASH.

THE world's supply of potash salts is derived from Germany, where there exist immense deposits of kainite, sylvinite, and allied minerals. Franz and Büttgenbach state* that there are three rivers in Germany named Saale, which name is evidently derived from numerous salines found in their valleys. In 1861 the commercial value of potassium salts (Kalisalze) was recognized and the industry at Stassfurt soon assumed colossal dimensions. The deposits are of a very complicated nature, and the deposition and formation of the beds must have been interrupted many times and proceeded at different temperatures. There are at the present time 25 different species of deposits known. The most important of these salts are sylvinite, KCl, and kainite, $K_2SO_4,MgSO_4,MgCl_2 + 6H_2O$. The mean thickness of the beds of the potassium salts is at least 20 m., and, considering the area covered, the authors mentioned estimate the quantity available at 10,000,000,000 tons, and, at the present output of 3,000,000 tons a year, the beds will last for 33 centuries.

The production of potash salts in Germany is controlled by the Verkaufs-Syndicat der Kaliwerke, Leopoldshall-Stassfurt, which sells through agents in the principal countries of the world, establishing price-lists at the beginning of each year which undergo but little change. The prices established for the year beginning March 31, 1898, are given in the following table:

	Testing.	Basis.	New York and Boston.	Norfolk and Philadelphia.	Charleston, Savannah, Wilmington, N. C., New Orleans.
	Per Cent.	Per Cent.	Per 100 Lb.	Per 100 Lb.	Per 100 Lb.
Muriate of potash........	80–85	80	$1.75	$1.76½	$1.78½
" " " minimum ..	95	80	1.78	1.79½	1.81½
Sulphate of potash, "	90	90	1.96½	1.98	2.00
" " " "	96	90	2.00½	2.02	2.04
Double manure salt............	48–53	48	1.01	1.02	1.03½
Kainite.........	12.4	....	(*a*) 8.55	(*a*) 8.90	(*a*) 9.05
Sylvinite	....	....	(*b*) .36½	(*b*) .37½	(*b*) .38

(*a*) Invoice weights, as taken at port of shipment, per ton of 1016 kg. (2240 lb.), testing 12.4% actual potash, equivalent to 23% sulphate of potash.

(*b*) Invoice weights, as taken at port of shipment, per ton of 1016 kg. (2240 lb.), per unit sulphate of potash.

These prices are made for quantities of not less than 400 tons of bulk salts or 50 tons of concentrated salts. This material is commonly shipped to Bremen *via* the river Elbe. During the suspension of river navigation, and in any event be-

---

* *Revue Universelle des Mines et de la Metallurgie*, Series 3, Vol. XXXIX., No. 1.

tween December 1, 1898, and March 1, 1899, or if goods are specially ordered to be shipped by rail, an additional charge of 5c. per 100 lb. is made.

The sales of the syndicate in 1896 and 1897 were as follows (in metric tons):

Year.	Potassium.		Potass.-Magnesium.		Kieserite.	Kainite and Sylvinite.	Carnallite.
	Muriate.	Sulphate.	Sulphate.	Carbonate.			
1896......	147,679	18,889	5,673	2,606	25,198	802,586	60.504
1897......	142,314	15,403	8,337	.....	25,882	964,105	63.701

The consumption of potash salts has shown recently great progress, especially in the more important agricultural sections of Europe.

ANALYSIS OF POTASH SALTS.

At the annual meeting of the Association of Official Agricultural Chemists at Washington, October 26–28, it was recommended that the Ulsch-Street method for the determination of nitrogen be made an official method. It was also recommended that the same method be used for determining K_2O in kainite as is now given for sulphate and double sulphate, and that the Stassfurt method be made optional. The Stassfurt and Lindo-Gladding methods are each equally accurate; the former is used by the potash producers, however, and there would be the advantage of uniformity if it were generally adopted. As to the determination of phosphoric acid it was recommended that the volumetric method be continued as a provisional method, pending further investigation. The methods of analysis adopted by the Stassfurt potash industry are as follows:

1. Analysis of "muriate of potash": For the determination of potassium chloride 7.6405 g. of the finely ground substance are dissolved and the solution made up to 500 c.c. If the sample contains more than 0.5% of sulphuric anhydride the sulphates must be transformed to chlorides by precipitating with an acid solution of barium chloride. The solution is filtered and 20 c.c. of the filtrate are evaporated with 5 c.c. of platinum chloride solution, the evaporation being carried to the point when the thick liquid rapidly crystallizes upon cooling.[*] The dry residue is then finely ground with a glass pestle, stirred with 20 c.c. of alcohol and poured upon a weighed filter. The filter should first be moistened with alcohol and care should be taken not to pour any of the liquid upon the rim. The precipitate, freed from alcohol as much as possible by suction and by pressing between filter-papers, is then dried about 30 minutes at 120 to 130° C. and weighed. One milligram of potassium-platinum chloride corresponds to 0.1% potassium chloride.

For the determination of chloride of sodium in "muriate of potash," 12.5 g. of the substance are dissolved in a 250 c.c. flask by boiling with 25 c.c. of water to which a little potassium carbonate has been added (in order to transform the compounds of magnesium and calcium into carbonates). The flask is then filled to the mark with absolute alcohol, and 100 c.c. are evaporated to dryness, after a few

---

[*] It is advantageous to evaporate the solution to complete dryness in case it contains potassium-platinum chloride and sodium-platinum chloride only, because the latter is thereby rendered free of water, and in this form is more soluble in alcohol.

drops of concentrated hydrochloric acid have been added to transform any potassium carbonate present into chloride. The residue is heated to low redness and weighed. In this mixture of the chlorides of potassium and sodium either chloride of potassium is determined after the common method with platinum chloride, and sodium chloride is calculated from the difference, or it is determined by titrating the mixed alkalies with N/10 silver solution.

For the determination of chloride of magnesium, 25 g. of chloride of potassium are dissolved in a 500-c.c. flask and 10 c.c. of normal potash solution are added. The contents of the flask are made up to the mark and 50 c.c. of the filtrate are titrated with N/10 sulphuric acid. The soluble compounds of calcium present do not influence the result.

2. For the determination of potassium sulphate and sulphate of potassium and sulphate of potassium and magnesium, 8.9235 g. of finely ground substance are dissolved in a 500-c.c. flask with about 350 c.c. boiling water to which 20 c.c. of concentrated hydrochloric acid have been added. The sulphuric acid is precipitated by slowly adding barium chloride solution (from a burette with glass cock) to the boiling liquid. If an excess of barium chloride has been added it must be precipitated with sulphuric acid. After cooling, the flask is filled to the mark and 20 c.c. of the filtrate (equal to 0.357 g. of the substance) are treated as usual with 5 c.c. platinum chloride solution. One milligram of K_2PtCl_6 corresponds to 0.1% K_2SO_4. 0.3% is to be added to the result obtained in the analyses of sulphate of potash, while in the analyses of sulphate of potash and magnesia no correction is necessary.*

3. For the determination of potassium chloride and potassium sulphate in calcined manure salts, 15.281 g. of the sample (for the determination of muriate of potassium) or 17.847 g. (for the determination of sulphate of potassium) are dissolved in a 500-c.c. flask with water to which 10 c.c. of concentrated hydrochloric acid have been added. The flask is filled to the mark, filtered, and 250 c.c. (equal to 7.6405 or 8.9235 g., respectively) of the filtrate are treated in a 500-c.c. flask with barium chloride solution in the same manner as in the determination of potassium sulphate.

4. For the determination of magnesium sulphate in kieserite, 10 g. of the finely ground substance are boiled for at least an hour in a 500-c.c. flask with about two-thirds of its contents of water. After cooling, from 50 to 60 c.c. of double normal potash solution and 20 c.c. (1 : 10) neutral potassium oxalate solution are added. The flask is filled to the mark, and the liquid filtered after standing for one-quarter of an hour. 50 c.c. of the filtrate are retitrated with one-tenth normal sulphuric acid ; 0.2% are to be added to the sulphate of magnesia obtained.

5. Analysis of crude potash salts (carnallite, kainite, sylvinite, and bergkieserite): In the preparation of the sample, it is recommended to grind at least 0.5 kg in a mill or mortar, in order to avoid differences resulting from coarse grinding.

For the determination of potash by the precipitation method, 35.70 g. of kainite or sylvinite and 30.56 g. of carnallite or bergkieserite are dissolved in a 500-c.c.

---

* In order to obtain accurate results it is absolutely necessary to follow the described method in all detail. Results will be unreliable, and more troublesome corrections will be needed, if the liquid be either more diluted or more concentrated, or if the sulphuric acid be precipitated from a solution which is either very slightly acid or even neutral, or if the boiling during precipitation be interrupted.

flask with about 350 c.c. boiling water to which 10 c.c. hydrochloric acid have been added. After cooling the flask is filled up to the 500-c.c. mark. 50 c.c. of the filtrate are precipitated in a 200-c.c. flask with barium chloride in the usual manner, and 20 c.c. (= 0.3570 or 0.3056 g. substance, respectively) are evaporated with 5 c.c. platinum chloride solution, and further treated according to the common method.*

6. For the complete analysis of the crude potash salts, 100 g. of the substance are dissolved by boiling with about 500 c.c. water. The solution is filtered and made up to one liter. A portion of the liquid serves for the determination of sulphuric acid according to the common method by precipitating with barium chloride; another portion serves for the determination of lime and magnesia. For the determination of the alkaline chlorides 100 c.c. of the solution (equal to 10 g. of the substance) are acidulated with hydrochloric acid, heated to boiling, and the sulphuric acid completely precipitated with chloride of barium in a 500-c.c. flask, avoiding an excess of the barium solution. 50 c.c. of this liquid (equal to 1 g. substance) are evaporated to dryness in order to drive off the hydrochloric acid, and thereafter magnesium chloride is decomposed by igniting with oxalic acid. After the ignition the residue is moistened with a little ammonium carbonate in order to transform the calcium oxide into calcium carbonate. In the mixture of the chlorides of the alkalies, which are now entirely free from lime and magnesia, potassium chloride is determined by evaporating with 10 c.c. platinum chloride solution. The weight of the sodium chloride is obtained by subtracting potassium chloride from the mixed alkalies.

In calculating the results obtained from kainite and sylvinite, the sulphuric acid combined with calcium is first subtracted from the total amount of soluble sulphuric acid. The remainder of the sulphuric acid is calculated to potassium sulphate and magnesium sulphate according to the molecular proportion in which these salts are present in kainite and schoenite. If, after this calculation, some potassium remains uncombined with sulphuric acid, it is to be reckoned as potassium chloride. Likewise, the remainder of the magnesia uncombined with sulphuric acid is to be reckoned as chloride magnesium. The result of the calculation will show how much potassium is present on the one hand in the form of kainite, $K_2SO_4,MgSO_4,MgCl_2,6H_2O$, and schoenite, $K_2SO_4,MgSO_4 6H_2O$, and on the other hand in the form of potassium chloride. Sodium is reckoned as chloride of sodium.

In carnallite and bergkieserite calcium oxide is calculated to sulphate of calcium, and the remainder of the sulphuric acid not combined with calcium is to be reckoned as sulphate of magnesium. Magnesia uncombined with sulphuric acid is to be reckoned as chloride of magnesium.

7. The content of water in chloride of potassium and in the other concentrated salts is determined by heating 10 g. of the sample in a covered platinum crucible for about ten minutes with a small flame to dark red heat. In the analysis of salts which are rich in chloride of magnesium, care should be taken to avoid the

---

* To be more particular it is recommended here to take a rather larger quantity of platinum chloride, say 6 to 7 c.c., and to grind the precipitate once or twice with fresh quantities of alcohol after the first washing liquid has been poured off.

decomposition of chloride of magnesium. This can be effected by covering the substance with freshly ignited lime, or with oxide of lead, or else the loss of chlorine should be determined by double titration, paying attention at the same time to the absorption of oxygen. The loss in weight is to be subtracted from the result obtained in the determination of water.

8. The platinum chloride solution is made up to a strength so that 10 c.c. contain 1 g. of platinum. The barium chloride solution is prepared by dissolving 122 g. of the crystals in water, adding 50 c.c. concentrated HCl and making up to one liter. The alcohol for washing should be at least of 96% strength.

The platinum in the alcoholic wash-water and precipitates of potassium-platinum chloride is recovered by diluting the former with about one-third water, heating to boiling and adding carbonate of sodium and the precipitates of potassium-platinum chloride, the latter in small portions at a time. The boiling is continued until the alkaline liquid covering the metallic platinum, which has been reduced, is perfectly clear and of faintly yellowish color. The liquor is then poured off and the platinum cleansed by boiling with hydrochloric acid and water, and afterwards with pure concentrated nitric acid. After decanting, the metal is dried and ignited in order to destroy organic compounds. The purified platinum is then dissolved with about four times its weight of pure concentrated hydrochloric acid to which one part of nitric acid is gradually added. After the solution is completed it is evaporated until a drop taken out with a glass rod solidifies on cooling. The solution is then allowed to cool, forming a crystalline cake, which is dissolved in water, filtered and diluted so that 1 g. of platinum is contained in 10 c.c. of solution. Special care has to be taken that the solution is free from subchloride of platinum as well as from nitrogen compounds. If the platinum originally used contains iridium, this must be separated. The platinum-chloride solution should be tested as to its purity against chloride of potassium of 80% contents made up from chemically pure crystals.

A new method for the estimation of potassium by reduction of the potassium platinic chloride with sodium formate has been described by B. Sjollema.[*] After pointing out the inaccuracies and difficulties in applying the usual methods for determining potassium, he gives a method based on that of Corenwinder and Contamine.[†] A portion of the solution to be examined, containing 0.5 g. of substance, is faintly acidified with hydrochloric acid, mixed with platinic chloride solution without previous precipitation of sulphuric acid, and evaporated to a sirup over the water-bath. When the mass is completely cooled it is covered with 90% alcohol, and allowed to stand for some hours; it is then washed with alcohol of the same strength, and transferred to a filter. The double potassium platinic chloride is then dissolved by pouring boiling water over it, and the hot solution is reduced in a porcelain basin with the aid of sodium formate, or, better, the hot chloride solution is gradually poured into the boiling solution of the formate. A glass beaker is to be preferred, however, to a porcelain dish, because, if covered with a watch-glass, there is no fear of spurting, and because there are no cracks in the glaze which can retain reduced platinum. With sufficient formate the solution speedily becomes discolorized; it is heated for some time to cause the agglom-

---

[*] *Chem. Zeit.*, 1897, 21 [74], 739, 740.

[†] *Bull. de la Soc. Ind. du Nord*, 1879.

eration of the platinum and to enable the precipitate to be washed readily. The reduced metal is thrown on a filter, the beaker being rinsed with dilute acid; the precipitate is finally washed with boiling water, dried, ignited, and weighed. The method is free from most of the usual faults, and is more rapid than those commonly employed. Sjollema prefers to use 90% alcohol in place of the alcohol and ether recommended by Corenwinder and Contamine.

The following method was described by Mr. H. N. Warren *: The solution containing the alkalies as chlorides, having been previously exhausted of the accompanying group metals, is heated with an excess of platinic chloride, and the whole evaporated to very small bulk in a platinum dish, or other suitable receptacle; to the contents are then added about double the original quantity of a mixture composed of equal parts of amylic alcohol and ether. The precipitate is by these means immediately rendered dense, and can thus be washed once or twice with the utmost facility, using the same mixture. The yellow precipitate thus obtained is next transferred to a small glass beaker, and heated to the boiling point with the addition of about 5 c. c. of formic acid. The solution thus speedily assumes a brownish tint, at which stage a slight excess of ammonia is introduced, and reboiled, when the whole of the platinum is precipitated in the form of black flocks, which may be readily washed and dried, from the weight of which the percentage of potassium present may be easily calculated. With a little practice the operation will be found more expeditious, more accurate, and at the same time less troublesome than the general methods advised for the estimation of potassium.

With respect to the chemical analysis of potassium minerals reference should also be made to the article on nitrate of potash elsewhere in this volume.

---

* *Chemical News*, 1897.

PYRITES

BY WILLIAM H. ADAMS.

LAST year was an exceptional one for the consumption of pyrites, no less than 10 large and well established manufacturing concerns in the Southern and Western States having decided to use pyrites ores for the manufacture of sulphuric acid, several of them changing from the use of brimstone for the first time in their history.

It is almost a repetition of the year 1893, witnessing within 12 months such radical changes of sentiment among conservative manufacturers, but during this time there have been other and greater surprises. The trade has ceased to look upon pyrites "fines" as a bugbear, and there are now completed plants from Maine to Alabama capable of consuming over 150,000 tons of granular ores annually. Considering what a desperate struggle has been made in the United States for the past 20 years to arrive at this stage, and the benefit it is to Amercan mines, with their enormous quantities of granular ores, some of which are gold bearing, it may well be said that 1897 was a halcyon year for pyrites in America.

There are several reasons for these changes, interesting to note: The Sicilian brimstone is now handled by a syndicate of European bankers who are able to control the markets of the world by a regulation in deliveries in such carefully calculated amounts to meet trade demands that speculation is discouraged and consumption is encouraged in all legitimate channels.

In this connection it is worthy of note that while the tendency has been toward the greater use of pyrites, year by year since 1883, with a consequent dropping off of brimstone imports to a corresponding extent (say at the rate of two and one-half tons of ore as the equivalent of one ton of brimstone), new demands for brimstone have come from other trades, such as the sulphite process of bleaching wood pulp, etc., sufficient to keep up the imports to the normal tonnage.

The business depression of the past few years, with freight rates as low as 2s. per ton from Spain, have disposed our manufacturers toward sulphur in foreign ores, offered as it has been at less than half the price of brimstone. The advance in rates to 10s. per ton, as of late, due to the demands for grain and cotton carriage, and a report of an export duty of $1 per ton on all ores exported from Spain, are now disposing our works to look nearer home for their supplies of sulphur.

The discovery of first-class phosphate rock in Tennessee, and its appearance in almost every market within reasonable distance, has compelled us to revise established ideas as to proper locations for the manufacture of acids and acid-phosphates for greatest and most profitable sale. This fortunate find of an exceptional grade of material for the manufacture of fertilizers seems to indicate a centering of new chemical works inland, and a consequent important demand for American pyrites in new sections of the country. A very large percentage of the fertilizer works have been money makers from the start, and the trade is to-day on as firm a footing, and with as bright a future, as any industry in the United States. Every year sees the erection of new and the enlargement of old works, until probably $50,000,000 have been invested in this class of plants for the consumption of pyrites within 20 years, and over 2,000,000 tons of commercial fertilizers are manufactured, annually, for sale within our own borders.

The domestic sources of pyrites remain the same as in 1896, as follows:

Arkansas.—A few preliminary steps toward the development of several pyrites mines in Arkansas have been made, but the character of the ores already offered in Chicago and St. Louis has not been satisfactory, and the cost is altogether too great for successful results. As a proof of the peculiar limitations which prevail in this trade it is stated that Memphis can be reached by ore from the Virginia mines at an all-rail freight rate as low as from the mines of Arkansas.

Alabama produced several sample lots of fairly good pyrites in 1897, and at the Nashville Exhibition very handsome ores were shown as coming from Alabama, Georgia, and Tennessee, but none of the properties has been worked, and the future of these deposits is problematical. Pyrites mining calls for the best talent of trained engineers, and can be successfully conducted only after long experience and with large capital.

In *South Carolina* pyrites was mined in 1897 in Gaston County; one property was worked by a Charlotte company, and the ores consumed at that place (Charlotte). Notwithstanding the alluring statements made by oversanguine promoters, and three years of development work, the district was deserted except in the case above mentioned. One chemical works, erected ostensibly to save the sulphur in the ores, which were supposed to carry gold, has been using for a year pyrites from Virginia.

The *Virginia* mines continue to engross attention, after steady working for 16 years, and their owners are reaching out for the control of the inland trade of the United States, while taking every contract along the Atlantic coast which can be won from the Spanish exporters. There was no development work of consequence on the belt during 1897, and no new ore bodies brought to light except in the south end of the Arminius mines property.

The Arminius mines in Louisa County have largely increased their facilities during the year, the No. 3 shaft being 760 ft. deep, with a large body of ore showing at that depth. A new shaft has been started to the south which has already opened large bodies of ore not heretofore known to exist in the mine. This shaft is now down 100 ft. The north drift from this shaft shows an ore body 35 ft. wide, and the south drift a new ore body from 10 to 40 ft. wide, one half of it shipping ore and the remainder mill ore, which is crushed and marketed as fines. This development to the south now gives a length of over

800 ft. of ore on the surface, with strong probability that another lense which is being tapped on the 250-ft. level north will add considerable to this. The overburden of the main bodies of ore will be stripped during the coming year, thus facilitating for years to come the extraction of the large amount of ore within 400 ft. of the surface. Over 400,000 tons of ore have been shipped from this property, and the daily capacity is now 250 tons.

The Sulphur Mines Co. is a constant shipper. Its workings during the year were confined to the No. 6 shaft. This mine has shipped over 400,000 tons of ore, taken from above the 400-ft. level.

In Prince William County about the same amount of work has been done during the year as recorded for the past few years—the entire product being consumed in Baltimore by one concern.

Massachusetts.—The Davis mine at Rowe is still a large producer of pyrites for the Eastern markets. Its output was larger in 1897 than in 1896.

Maine.—There is some talk of reopening the Blue Hill mines in Maine, and utilizing the ores in part for the manufacture of sulphuric acid, but transportation problems enter to make it too costly a product, not to be compared with Newfoundland "fines," which will continue to be a small item of consumption for a few years.

In *Colorado* there has been a small consumption of concentrates, averaging about 43% S, the residues of which are treated for their precious metal contents, and in California there has been some consumption of copper ores—the sulphur in roasting being utilized for acid and the cinders treated for the contained precious metals. There is a wide field for this class of combined working of pyrites, and nowhere to better advantage than in the Southern States.

Canada.—The Canadian mines are no longer a factor in the calculation of acid manufacturers, the Eustis mines at Capelton being the only ones bidding for American trade this year, and their output not increasing.

Roasting Furnaces.—Improvements which are now going on in roasting furnaces will in the near future evolve an economical and easily managed furnace for the treatment of pyrites "fines," whether the stocks now sold by the pyrites mines (say ¼-in. mesh) or as recovered from the gold mills (say 40-mesh), and such a furnace will be universally used throughout the Southern States to the manifest advantage of many mines now throwing away thousands of dollars a year in the sulphur from their roasting operations.

Consumption of Sulphur.—As a rule Americans accept the use of sulphur without thought of the source of production or certainty of supply. In 1880 the imports were a little less than 85,000 tons of brimstone, while we are now consuming at the rate of nearly 300,000 tons per annum of sulphur from all sources. During the past 17 years we have imported in the form of commercial brimstone, etc., 1,842,000 long tons; in pyrites, averaging 47% sulphur, 870,000 tons; a total of 2,712,000 tons of sulphur. In the same period we have produced in the United States 1,210,000 tons of pyrites, containing 43% sulphur, or 520,300 tons of sulphur; the total amount of sulphur consumed in the United States since 1881 has been consequently 3,232,300 tons.

My estimate of sulphur consumed in this country for the year 1897, in tons of 2,240 lb., is as follows: From 138,846 tons of imported brimstone, averaging 98%, 136,069 tons; from 1,690 tons of domestic brimstone, averaging 98%, 1,656 tons; from 259,546 tons of imported pyrites, averaging 47%, 121,986 tons; from 128,468 tons of domestic pyrites, averaging 44%, 56,592 tons—total, 316,303 tons.

PYRITES STATISTICS OF THE UNITED STATES.

(In tons of 2,240 lb.)

Year.	Production.		Imports.			Consumption.	
1893	95,000	$285,000	194,000	44%	$582,000	289,000	$867,000
1894	107,463	466,466	164,000	45%	590,905	253,485	1,057,871
1895	107,871	342,587	190,436	46%	678,812	297,787	1,016,669
1896	117,782	297,853	199,678	47%	1,140,571	317,460	1,438,424
1897	128,468	379,699	259,546	47%	874,419	388,014	1,254,118

The varying percentages of sulphur in foreign ores is accounted for thus: From 1880 to 1888 the imports were chiefly copper ores from Canada, and after 1888 Newfoundland and Spanish ores were imported, which raised the sulphur percentage of all the ores.

The average price realized at the mines for the pyrites produced in the United States in 1897 was $2.90 per long ton. The average depends, of course, a good deal upon the proportion of lump ore, which brought from $3.25 to $3.50 per ton, and fines, which sell for less. The average freight on American pyrites sold last year, from mines to place of consumption, may be estimated fairly at $2.25 per long ton; consequently it appears that American ores averaging 44% sulphur are holding their own at a cost of $5.15 at the sulphuric acid works against 47% foreign ores at a cost of $6.10.

QUICKSILVER.

THE production of quicksilver in the United States—wholly from California—in 1897 was 26,079 flasks, against 29,863 flasks in 1896, the decrease being equivalent in value to $144,000. It was due chiefly to the permanent closing of the Sulphur Bank mine, the temporary suspension of operations in the Mirabel, or Standard mine, and the Altoona, and the diminished production of the Great Western and Abbott. On the other hand, the New Idria shows a noteworthy increase since it changed hands and a new furnace was erected. No new mines were opened during the year, the continued low prices offering no inducements to prospectors to look for cinnabar. The production of quicksilver in 1897 by the reporting mines is shown in the following table:

Month.	New Almaden	Napa Con.	Mirabel.	Ætna.	Great West'n	Great Eastern	Sulphur Bank	New Idria.	Altoona.	Abbott.	Redington.	Totals.
	Flask.	Flask.	Flask.	Flask.	Flask.	Flask	Flask.	Flask.	Flask.	Flask.	Flask.	Flask.
January...	375	400	....	300	233	139	....	110	254	88	112	2,011
February..	330	350	....	270	292	114	....	110	191	90	25	1,772
March .. .	425	450	....	330	211	75	....	110	174	40	126	1,941
April......	530	400	....	300	215	111	....	200	17	52	160	1,985
May	300	400	....	300	250	131	....	275	....	19	138	1,813
June.......	400	600	....	300	290	127	....	400	....	77	155	2,349
July........	430	600	11	300	242	133	....	400	....	81	117	2,314
August	400	600	....	300	250	145	....	400	....	99	128	2,322
September,	360	600	....	275	200	176	....	400	....	39	165	2,215
October....	400	600	....	205	126	162	....	400	....	70	136	2,099
November..	350	600	130	395	86	128	....	400	....	54	102	2,245
December..	400	600	250	325	50	150	....	400	50	64	124	2,413
Total '97..	4,700	6,200	891	3,600	2,445	1,591	....	3,605	686	773	1,488	25,479
Total '96..	6,200	5,000	1,125	3,800	2,165	1,126	1,685	1,335	4,208	1,189	1,443	29,271

In addition to the above there was a production of 600 flasks by small mines in 1897, and 500 flasks in 1896, making the total as reported at the beginning of this article.

No material increase of production in 1898 is to be expected, since, although the Altoona and Almaden mines may increase their output, this will be about offset by a decrease from the New Idria and perhaps another. Yet it is as difficult to predict what the yield of quicksilver will be as it is to guess what the price will be, for the price is as capricious as the cinnabar deposits themselves. It is controlled entirely by the Rothschilds in London. The range of prices in 1897 in the San Francisco market was as follows:

PRICES OF QUICKSILVER PER FLASK IN SAN FRANCISCO, 1897.

Month.	Highest.		Lowest.		Month.	Highest.		Lowest.	
	Domestic	Export.	Domestic	Export.		Domestic	Export.	Domestic	Export.
January	$37.50	$34.00	$35.50	$29.50	August	$40.00	$36.50	$38.00	$31.50
February	37.50	34.00	37.00	31.00	September	38.00	36.00	38.00	31.00
March	40.00	37.00	37.75	31.75	October	39.00	36.00	37.50	31.00
April	40.00	36.50	39.00	36.00	November	39.00	36.00	38.25	34.00
May	40.50	37.00	39.50	34.00	December	38.50	35.00	36.50	34.50
June	40.50	37.00	39.25	34.25					
July	40.00	37.00	38.75	34.25	Year	$40.50	$37.00	$35.50	$29.50

QUICKSILVER STATISTICS OF THE UNITED STATES. (a)

Year.	Production.			Exports.			Year.	Production.			Exports.		
	Flasks.	Met. Tons.	Value.	Flasks.	Met. Tons.	Value.		Flasks.	Met. Tons.	Value.	Flasks.	Met. Tons.	Value.
1892	27,993	974	$1,119,720	3,518	122	$133,626	1895	33,978	1,179	$1,313,589	15,542	539	$482,085
1893	30,164	1,046	1,108,527	16,631	575	539,385	1896	29,863	1,036	1,104,907	19,944	692	618,487
1894	30,440	1,056	1,095,810	14,408	500	397,528	1897	26,079	965	991,002	13,173	475	394,549

(a) In 1893 there were imports of 395 flasks, and in 1894 only 7 lb. In 1895, 1896, and 1897 there were no importations.

At the end of the year the stock of quicksilver was lower than it had been for a long time. The exportation of quicksilver by sea from San Francisco was not as large in 1897 as in 1896. Shipments were made chiefly to Mexico.

There were various reports of new quicksilver discoveries in the United States in 1897, but none of these amounted to anything; at least, none became productive. Among others, discoveries of cinnabar were reported at Walnut Grove, Yavapai County, Arizona, and at the Hill mine in Grant County, N. M.

Notwithstanding the low prices, quicksilver mining in California was rather prosperous in 1897, several of the companies having paid good dividends. The Napa Consolidated Quicksilver Mining Co. in 1897 produced metal to the value of $217,567 at an expense of $123,291, including construction. The amount of ore treated was 28,650 tons, yielding 474,300 lb. of mercury, an average of 0.83%. The average value of the ore was $7.59, and the expenses $4.30, per ton.

The Ætna Consolidated Quicksilver Co. in 1897 sold quicksilver to the value of $131,017. The working expenses, including new construction, amounted to $78,332. The amount of ore treated was 17,538 tons, which yielded 275,400 lb. or 0.78%. The receipts figured out to $7.47, and the cost of production to $4.47, per ton of ore. The New Idria Quicksilver Mining Co. paid $20,000 in dividends. This company was reorganized in 1896, since which time the new management has succeeded in putting the mine and works in excellent condition. In 1897 the company enlarged its territory by buying the ground between its old workings and the San Carlos mine.

QUICKSILVER PRODUCTION OF THE WORLD, IN METRIC TONS. (*a*)

Year.	Austria.	Canada.	Italy.	Mexico.	Russia.	Spain.	United States.	Total.
1892	542	(*d*)	325	(*b*)	343	1,657	971	(*c*) 3,838
1893	512	(*d*)	273	286	201	1,666	1,046	3,984
1894	519	(*d*)	258	300	196	1,610	1,056	3,989
1895	535	2.5	199	213	434	1,506	1,179	4,069
1896	564	2.0	186	218	491	1,524	1,151	4,136
1897	550	0.3	200	294	617	1,709	905	4,275

(*a*) From official reports of the respective governments, except the figures for the United States and Mexico, which have been compiled from direct reports of the producers to THE MINERAL INDUSTRY, and the figures for 1897, of which only those for Canada and Russia are official. The figures for Austria and Italy for 1897 are due to V. Spirek, that for Russia to the sole producer, and that for Spain to Roman Oriol of the *Revista Minera*, etc. (*b*) Statistics not collected. (*c*) The production of Mexico is not included. (*d*) None.

GENERAL QUICKSILVER STATISTICS. (*a*)

	1888	1889	1890	1891	1892	1893	1894	1895	1896	1897
	Flasks. (*b*)	Flasks. (*b*)	Flasks. (*b*)	Flasks. (*b*)	Flasks. (*b*)	Flasks. (*b*)	Flasks. (*b*)	Flasks. (*b*)	Flasks. (*b*)	Flasks. (*b*)
Shipments from Spain to London	52,243	49,778	50,202	47,998	47,321	44,670	42,414	40,409	40,999	46,577
Shipments from Italy to London	10,460	10,498	12,470	10,440	6,765	6,680	8,700	5,775	3,800	4,450
Total	63,703	60,276	62,672	58,483	54,086	51,350	51,114	46,184	44,799	51,027
Shipments from London	45,806	55,366	57,702	63,143	46,055	42,265	41,046	37,937	31,273	29,665
Austrian production	14,000	14,000	14,000	15,000	15,000	15,000	15,000	15,000	15,000	15,000
Californian "	33,250	25,650	22,926	22,904	27,993	30,164	30,440	33,978	29,863	26,079
Maximum price of Spanish	$52.50	$48.75	$51.88	$45.00	$38.75	$34.375	$33.75	$36.875	$36.25	$36.85
Minimum " " "	33.75	36.87	44.37	36.25	30.25	30.62	27.50	31.87	32.12	33.07

(*a*) From W. Sargant & Co.'s Annual Metal Circular, except the statistics of California production, which are as reported by THE MINERAL INDUSTRY.

(*b*) American, Russian, and Italian flask, 76.5 lb. (34.7 kg.); Mexican flask, 75 lb. (34.08 kg.); Spanish flask, 76 lb. (34.5 kg.).

CONSUMPTION OF QUICKSILVER IN THE UNITED KINGDOM.

Year.	Imports.	Exports.	Consumption	Year.	Imports.	Exports.	Consumption
	Flasks.	Flasks.	Flasks.		Flasks.	Flasks.	Flasks.
1892	56,203	49,939	6,264	1895	49,658	36,826	12,832
1893	51,797	37,478	14,319	1896	44,799	31,273	13,526
1894	51,250	43,598	7,652	1897	51,027	29,665	21,362

Australia.—Large and rich deposits of cinnabar are said to have been discovered on Noggriga Creek, New South Wales. A shaft has been sunk to a depth of 100 ft., at which depth the lode carries a high percentage of metal.

A discovery of cinnabar was made in New Zealand on Mangakirikiri Creek, a branch of the Kauaeranga River, about 8 miles from the Thames. There are said to be indications that the lode is of considerable extent.

Austria.—The production of quicksilver in Austria was 550 metric tons in 1897, against 564 in 1896, of which 540 and 542.6 tons respectively came from the Idria mines and the remainder from Neumarktel. A discovery of quicksilver was made at Tristyn in Croatia, and an English company was organized to exploit the deposit.

Canada.—There was a small production of mercury in British Columbia in 1897, this being derived from the vicinity of Kamloots Lake, B.C., where cinnabar occurs in irregular veins, consisting chiefly of calcite and quartz, which traverse zones of a gray feldspathic and dolomitic rock. Both these zones and the contained veins run nearly magnetic north and south through the main country rock, which is a dark, greenish-black Tertiary eruptive containing pyroxene and olivine.

China.—Rich deposits of quicksilver are said to exist in the province of Kwei-Chow, in Southwestern China. Until now this province has been closed to foreign trade, but by a treaty between Great Britain and China, which took effect on June 4, 1897, the West River, which taps this region, was thrown open to commerce for all nations.

Italy.—The Italian production in 1897 was 200 metric tons, against 186 tons in 1896, the Siele mines producing 150 tons in 1897 and 149 in 1896, while the rest was turned out by the Cornacchino mines. An Italian company was formed to develop the quicksilver mines at Abbadia, San Salvatore, Tuscany.

Mexico.—Important new mines were developed in the State of San Luis Potosi, and partly owing to these and partly to the low price of silver, which had the natural effect of stimulating the production of mercury, the output of the Republic increased considerably in 1897. The new mines referred to are situated in the Moctezuma district about 70 miles northwest of the city of San Luis Potosi. The first discovery in this district was made in 1894, the mine first opened being the Dulces Nombres. Up to the end of November, 1897, it was estimated to have produced nearly 3000 flasks of mercury. The Guadalcazar Quicksilver Mines, Ltd., acquired this mine under lease, paying a royalty of $3000 per month, and is reported to be doing very well. About one mile from the Dulces Nombres another deposit was discovered during the summer of 1897, and a mine called the Guadalupaña has been opened to a depth of 24 m. and is said to show a large amount of quicksilver ore. The ore of this district is ferruginous and of high grade, yielding from 30 to 70% of mercury. A new kind of retort invented by Don Celso Licino of San Luis Potosi has been employed in the treatment of the ore with more or less satisfactory results.

The other important producers of quicksilver in Mexico are the Nuevo Potosi and Huitzuco companies, the former exploiting mines at Guadalcazar and the latter at Huitzuco in the State of Guerrero. A new company was organized to open mines in the State of Durango, not far from the city of that name, but it has not yet become productive. Besides these a good deal of quicksilver is produced in Mexico in small furnaces by the natives. The production of the latter increased a good deal in 1897 owing to the fall in the value of silver and the consequent rise in the value of quicksilver in Mexico, which led to the reopening of many small mines which had been previously abandoned.

Russia.—The production of quicksilver in Russia in 1897 was 37,600 poods or 617,000 kg., against 491,456 kg. in 1896. The increase was due partly to an improvement in the grade of the ore, which in 1897 yielded an average of 0.79%, against 0.71% in 1896. The entire production of quicksilver in Russia comes from the mines of A. Auerbach & Co., near the Nikitovka station on the Kursk-Kharkov Railway in the Bachmut district of the government of Ekaterinoslav. The metallurgical practice at these works, which employ the Auerbach improved Spirek-Schernia furnace, described and illustrated by Mr. Spirek on another page, is very good, and ore yielding 0.4% quicksilver is said to cover the cost of production. The production of quicksilver at these mines from the beginning has been as follows:

	1887.	1888.	1889.	1890.	1891.	1892.	1893.	1894.	1895.	1896.	1897.
Average yield, p. c.	1.00	0.76	0.51	0.78	0.80	0.65	0.46	0.46	0.69	0.71	0.79
Production, kg.....	64,062	164,815	167,109	292,137	328,865	342,768	200,999	195,857	484,070	491,465	617,000

Of the quicksilver production of Russia about 4000 poods per annum are sold in Russia, the remainder being marketed abroad, especially in Hamburg. The falling off in the production in 1893 and 1894 was due to the flooding of the mine in 1892, which prevented exploration work from being carried sufficiently far ahead. At the end of 1894 all difficulties had been overcome, and since that time the production has been increasing regularly.

The extraction of the ore is also effected more cheaply than a few years ago, the present cost being only 5.3 kopecks per pood. The selling price of the quicksilver produced was 29.25 rubles per pood in 1896 and 30.19 rubles in 1897. The company paid a dividend of 7.48% in 1896 and 11.75% in 1897. It is expected that the production of quicksilver in 1898 will be 632 metric tons.

The quicksilver veins at Nikitovka were discovered in 1879 by A. Minenkov. They occur in three small folds in the main anticlinal of the Donetz coal basin. Of the three mines situated on these folds, the most important is the "Sophia," which has been carried to a depth of about 80 m. The ore is cinnabar impregnating a sandstone and occurring in cavities and along the crevices in a much-fractured quartzite, the latter being the richer. The most abundant associated mineral is stibnite in acicular crystals. Pyrite, of course, is not lacking, but it is developed mainly in the rocks accompanying those carrying the ore. A noteworthy associate of the cinnabar in the quartzite is a carbonaceous substance which sometimes incloses perfectly formed crystals of cinnabar.

Spain.—The production of quicksilver in 1897 was 49,540 flasks, which was an increase of 5656 over 1896. Almaden produced 47,357 flasks, El Porvenir (Mieres) 1600 flasks, La Union Asturiana 472 flasks, La Soterraña (Pola de Lena) 100 flasks, and other producers 11 flasks. The production of Almaden was 6027 flasks more than in the previous year. The exports of quicksilver from Spain were 1,742,325 kg., an increase of 184,270 kg. over the previous year.

THE QUICKSILVER INDUSTRY OF ITALY.

BY VINCENTE SPIREK.

THE most important deposits of cinnabar in Europe are those of Almaden in Spain, Idria in Krain (Austria), Nikitovka in Russia, and Monte Amiata in Tuscany (Italy); besides these there are smaller deposits in Germany, Krain, Bohemia, Hungary, Siebenburgen, Bosnia, and Italy. The richest and most celebrated quicksilver mines of the world are those of Almaden, which have a history of more than 2000 years. Then comes Idria in Krain, known since 1490. The Nikitovka mines were exploited by the Greeks, and those of Monte Amiata by the Etruscans, as is shown by the discovery of numerous relics of those peoples. In the middle ages, A.D. 1000 to 1200, the mines of Monte Amiata were actively worked under the Aldobrandeschi, while at Selvena a small production of quicksilver has been made by the Sforza di Santafiora up to our own time. The present industry began at Siele in 1846, at Cornucchi in 1879, at Nikitovka in 1883.

With respect to the geological formations, in which these deposits occur, Almaden belongs to the Silurian, Idria to the Triassic, Nikitovka to the Carboniferous, and Monte Amiata to the Tertiary. The geology of these deposits has been described so fully in the technical periodicals of Europe that it is unnecessary to go into this matter here. The latest publication is a paper on Monte Amiata by myself in the *Zeits. f. Prak. Geol.*, November, 1897.

The special object of the present paper is a description of the metallurgical practice at the Siele, Cornacchino, and Montebuono mines in Monte Amiata, where the works built between 1890 and 1897 are considered to embody the latest developments in the winning of this metal.

In Europe during the second half of the present century the metallurgy of quicksilver has received the greatest attention in Idria, where since 1870 every attempt has been made to bring it to the highest scientific perfection. Exeli, Teuber, Lanzer, Cermak, Spirek, Novak, Kroupa, Zdrahal, Svoboda, Mitter, Tanda, all Bohemians and ex-students of the Pribram School of Mines, are the metallurgists who have been engaged in this development. A description of the Idria works may be found in the second volume of Schnabel's *Metallhüttenkunde*, and in THE MINERAL INDUSTRY, Vol. IV. J. B. Randol, formerly director of the New Almaden mines, of California, who twice visited Idria, introduced the Exeli shaft furnace used there into California. As a species of compensation the Californian continuous roasters gave Cermak the first idea in the construction of the furnace which bears his name. The remarkable development of the metallurgy of quicksilver at Idria attracted the attention of the owners of quicksilver mines in Russia and Italy, so that in Nikitovka and Monte Amiata may now be found the newest Idria furnaces, perfected in construction by later experience.

Preliminary Treatment of Quicksilver Ores.—Quicksilver occurs mainly as the sulphide, cinnabar. It is fluid at ordinary temperatures, solidifying at – 39° C.; it boils and vaporizes at 360° C., but is already volatile at – 44° C. Its specific gravity is 13.6. The average metallic content of the ores treated at the most important works are: Almaden, 8%; Idria, 0.8%; Nikitovka, 1.0%; Siele, 1.2%; Cornacchino, 0.6%; Montebuono, 0.4%; California, 1 to 3%.

Quicksilver ores should never be prepared for reduction by means of wet concentration, since the extra cost and losses, combined with the more expensive treatment in crucible or muffle furnaces, far exceed the cost of direct roasting in all other furnaces. And further, there is the question what to do with the tailings from the dressing-works, which still carry considerable mercury. For 10 years the Cornacchino mine in Monte Amiata threw tailings assaying 0.6 to 1% Hg from wet concentration over the dump. These tailings are now being worked at good profit in the new continuous fine-ore roasters. It is not possible to estimate how much has been carried away by wind and rain during these 10 years. In the metallurgy of quicksilver one of the first principles is to adapt the furnace to the mine ore, and never attempt to adapt the latter to the furnace by means of wet concentration. It is when poor ores have to be treated that the greatest knowledge and experience in the selection of a proper furnace are required. Rich ores, such as those of Almaden, will stand a good deal of bad practice.

The separation of the ore into grades of varying richness usually takes place in the mine itself, single rich pieces being won by spalling from the ordinary ore. The poorer ores are generally divided by screening into two classes: "coarse ore," of 35 mm. diameter upwards, and "fine ore," of less than 35 mm. diameter. The coarse ore is worked either by direct treatment in shaft furnaces by means of coke, coal, lignite, peat, or wood, or in so-called shaft reverberatories by means of gaseous fuel, produced in separate generators. The fine ore, which is sometimes again subdivided into medium coarse and fine, is worked in reverberatories (*Fortschauflungsofen*), or continuous roasters (*Schüttofen*). The rich ores are mixed with lime or iron and treated by sublimation, either in continuous roasters or in muffle furnaces. The actual operations are therefore divided into the roasting method and the sublimation method.

At the present time nearly all the works employ the roasting method, which consists in decomposing the cinnabar by means of an oxidation of its sulphur through the agency of atmospheric oxygen, and subsequent volatilization of the metallic quicksilver. It is thus evident that the theoretical extraction of the metal is a very simple one. In practical work, however, this is not found to be the case. The greatest practical difficulties encountered lie first in the excessive volatility of the metal, and secondly in its high specific gravity as a fluid, which greatly facilitates its penetration into the ground and into all the foundations, and lastly in a property which has so far received but little attention and works exactly in an opposite direction to gravity, namely, the sickening of the quicksilver (*Quecksilberschaumbildung*) by fatty substances, which prevent the very smallest metallic spheres from coalescing, and hold them as a fine film on the surface of the water, with which they are carried off, thus causing very considerable losses.

From what has been said above, it is easy to lay down the fundamental conditions necessary for a rational method of extraction. It is absolutely necessary in working low-grade ores to adhere most strictly to all the conditions which may influence the success of the operations. Low-grade ores can only be treated on a large scale, for which shaft furnaces and continuous roasters are alone adapted. These continuous roasters are nothing more than shaft furnaces, designed for the treatment of fine ores and dust, in which the interstices formed in the shaft furnace by the pieces of coarse ore themselves, thus providing the necessary passageway for the gases of combustion and roasting, are produced artificially by an arrangement of tiles, as subsequently described.

The second condition of financial success is the complete utilization of the heat generated. This can be considered as accomplished when the gases escape from the furnace at the minimum temperature consistent with the winning of the metal, and when the residues are discharged from the furnace only after they have given up their heat in preheating the volume of air required by the furnace.

The safest way to prevent the volatilization of quicksilver is to have a continuous low pressure in the furnace and in the condensing chambers. The difference between this and the outside atmospheric pressure must be very small, however, in order not to give too great a velocity to the gases. Additional help is derived from surrounding the furnaces with iron plates. Very important in this respect is the construction of the floor, the side-plates having more the purpose of solidly bracing the furnace. This is the case in the large Cermak-Spirek continuous furnace (*Schüttröstofen*), where the sides have many openings to facilitate working and supervision. The quicksilver has to be prevented by the proper construction of the floor from penetrating into the foundations of the furnace. Over 1000 centners of quicksilver have been recovered from the foundations of furnaces at Idria.

A quicksilver furnace must be accessible at all times and from all sides. Special care must be given to the firing and the combustion of the fuel. A complete combustion of the air heated in the furnace should be attained, and at the same time the excess of air should be kept down to the lowest limit, in order to reduce as much as possible the amount of gases to be afterwards condensed. In this way (according to Dalton's law) the volume of the mercury vapors is kept at the lowest limit. This is important, since it is difficult to condense quicksilver from a large volume of gases. A sort of quicksilver mist is formed and the previously mentioned "quicksilver-foam," whereby losses are caused.

Condensation of the Quicksilver.—A good condenser must satisfy the following conditions: 1. The gases, immediately after leaving the furnace, must be cooled quickly to below 100° C.; 2. The water used for cooling must be kept completely separate from that used for condensation, in order not to have much motion in the collecting tanks for "stupp" and quicksilver, by which some of the metal might be lost; 3. All the openings in the condenser must have water-plugs; 4. The quicksilver must be caught and retained beneath the surface of the water.

Cermak's condenser of 1878 satisfies all these conditions, and is still unsurpassed by any other construction. The use of wood or clay instead of cast iron in places where the temperature varies between 60 and 20° C. is indeed rational and economical, but it is not a fundamental alteration such as would justify the omission of the name of the inventor, as Dr. Schnabel has done in his treatise on metallurgy. Wood was used as material for condensers by Bauer in Idria and Vallalta in 1852, the aludel being of clay. Exeli made use of clay pipes of 1 m. in diameter, in connection with shaft furnaces, as far back as 1874. Cermak's condenser is shown in Fig. 6. The rapid cooling to 100° C. is obtained by the use of cast-iron (a good conductor of heat) pipes of elliptical section. Where the solutions of sulphuric and sulphurous acids have condensed below 100° C., the iron is protected against their corrosive action by a lining of cement. Clay pipes and wooden tanks are also used where the temperature permits.

The Formation of Stupp.—Stupp is an unpleasant intermediate product in the treatment of low-grade quicksilver ores, since only a small proportion of the quicksilver, about 20 to 30% of the total recovery, is obtained from the condensers the remainder being in the stupp, which must then be subjected to a wet treatment (Randol), or an electrical process (Auerbach), or treated mechanically (Exeli), by which means 90% may be obtained. There is then 10% still in the stupp, which is mixed with lime, ashes, and dirt, and returned to the furnaces.

The stupp is a nuisance, however, only when present in too large quantities; otherwise (curious as it may seem) it is very useful, and may even be said to be absolutely necessary, because otherwise large losses of quicksilver might result.

The stupp serves as a support for the tiny globules of metal as they condense from the gaseous into the liquid form, and even though it should pass the condensers it is arrested in the dust chambers. Experiments have been made in the use of filters instead of large dust chambers, but these were abandoned on account of the unhealthful work connected with them, and irregularities in the draught of the furnaces and of gases which they caused.

The dust chambers, or, as they are commonly called in the works, "the central condensing chambers," should not be too high, 2 m. sufficing to adapt them to the work to be done. They should be provided with a large number of upright partitions, made of thin boards, which should be so placed that the area of the intervening spaces is twice the area of all the condensing tubes together. Then the draught will be uniform, and the chambers need only be cleaned every two years, as it is quite easy to remove by means of hoes the stupp which has settled on the floor. This accumulation of stupp is also serviceable in another way, preventing the saturation of the gases as they pass over it with water vapor or the vapor of quicksilver, the latter being given off by the deposit on the floor at every increase of temperature.

Prof. Christy in his paper on the methods employed at New Almaden has determined theoretically the point of saturation of gases which pass in a closed space above liquids (here the quicksilver). The writer, however, in his analyses of the gases from the condensing chambers has not found a saturation of the gases either with water vapor or vapors of quicksilver, notwithstanding the fact that water has flowed from the chambers beneath the siphon lock. After the chambers had been opened an old "dry" layer of stupp, 4 to 8 cm. thick, was found, thus affording an explanation of the fact that the gases had a saturation of only 30 to 45%.

Thus it is seen that the stupp, as an intermediate product in the treatment of quicksilver ores to the extent of 1% of the total quantity treated, is a useful if a necessary evil.

Furnace Pressure.—One of the most important conditions in a good method of quicksilver reduction is the maintenance of a regular depression inside the furnace, which is produced by means of suction-fans (the heating of the stack is unsafe and even hurtful). The fans also guarantee the necessary draught to the furnace. The careful supervision and maintenance of the depression is one of the most delicate parts of the work to be performed in a quicksilver works.

The amount of ore treated may be considerably raised by means of a lively draught, but at the same time the risk of the metal being driven out of the stack is very great, or of its being carried into the central chambers, far from the condensers and the settling tanks for the stupp. The proper draught for the normal settling of the quicksilver and the stupp in the condensers is obtained when the gauge at the point of exit of the gases from the furnace and entrance into the condensers shows 0.1 mm. water column. This is the case when the gauge at the fan shows 0.4 mm.

The Furnaces and Methods of Treatment employed at Monte Amiata.—The Siele works, remodeled during 1890 to 1895, have the following furnaces: One large Cermak-Spirek continuous furnace (*Schüttröstofen*), built in 1895; one medium ditto, 1891; one small ditto, 1892; one shaft furnace, rebuilt in 1893; one double-shaft furnace, built in 1896; one muffle furnace, rebuilt in 1896.

Fig. 1

FRONT ELEVATION

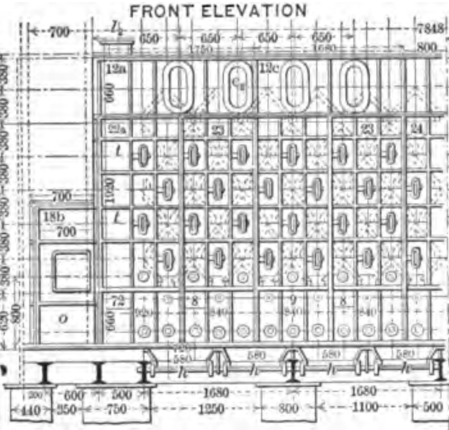

Fig. 2

LONGITUDINAL SECTION

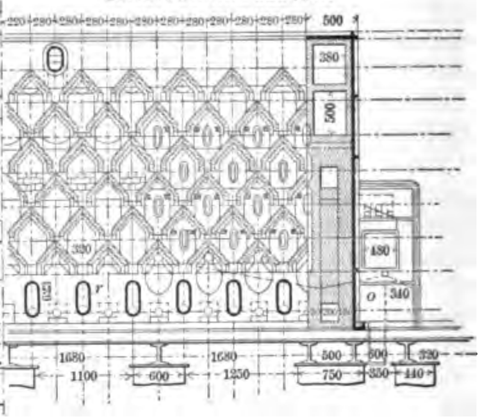

The works at Cornacchino, completely rebuilt in 1895 and 1896, have the following: One large Cermak-Spirek continuous furnace (*Schüttröstofen*), built in 1896; one small ditto, 1897; one shaft furnace in construction, 1897.

The works at Montebuono consist of the following: One medium Cermak-Spirek furnace, 1890; one muffle furnace, 1887; one shaft furnace, 1887.

The large Cermak-Spirek continuous furnace (*Schüttröstofen*), reproduced in Figs. 1, 2, 3, 4 and 5, presents the appearance of a square chamber of iron, with a small chamber at each end. The longer sides have a regular system of oval openings, provided with movable covers. The two small chambers (*O*) at the ends are fire boxes or half gas-generators, which may be used as such or as fireplaces with a plane grate. Soft coal, lignite, peat, or wood may be used as fuel. The channel *b* connecting the two fire boxes serves as a combustion chamber, and is situated in the middle wall of the furnace. The four encircling walls and this middle wall rest upon the bed-plates *MN*. These, made of sheet iron held together by means of angle irons, form reservoirs, which retain any quicksilver which may have escaped. This metal is drawn off into pots placed underneath by means of special tap holes.

The plates, that is, the whole furnace, rest upon iron supports, which form a regular network and also sustain the discharging apparatus for the residues. The pillars upon which the first row of girders rests are also provided with covering plates, so that quicksilver may nowhere penetrate into the foundations. The bottom plates are entirely open to observation. The middle wall separates the furnace into two symmetrical, longitudinal chambers, each of which is divided into three compartments by means of two intermediate walls, formed by perforated blocks *P* and resting on U-irons 16 cm. broad. These blocks form the supports for the fire proof tiles (the most important part of the furnace) S_1, S_2, S_3. Three of these together with the perforated blocks form a cell. Twelve similar and complete cells are present at the entrance level; in the levels above and below there are 11 full cells and two half-cells next to each other; this order is preserved in the second chamber, and so on upwards for the six levels.

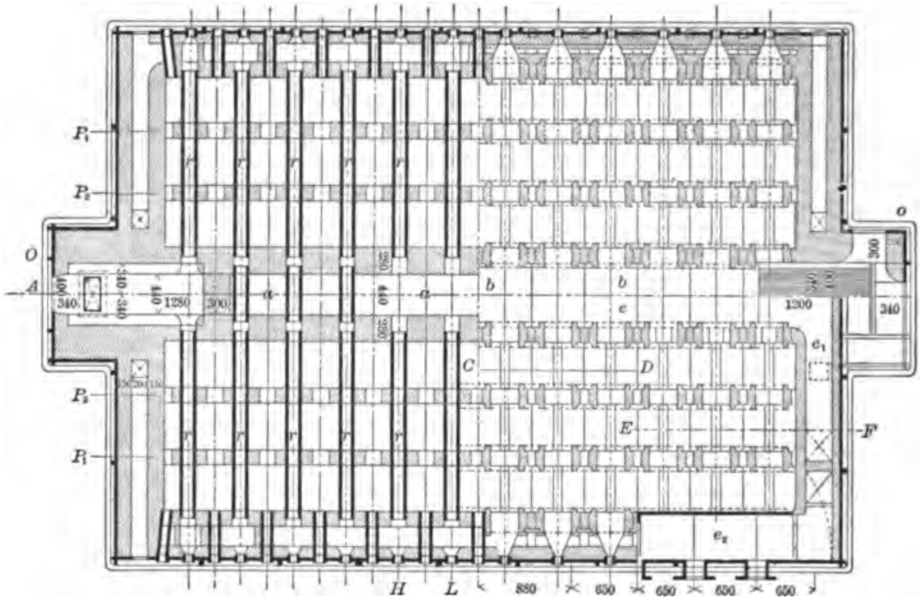

Fig. 3
PLAN

It will be observed from the drawings that the furnace is completely filled with transverse tiles of V shape, the apex upward, and staggered so that the apex of each tile comes opposite the space between the edges of two tiles in the layer next above it. The ore rests upon the sides of these tiles in a sheet from 2 to 10 cm. thick, the thickness of the bed being governed by the adjustment of the tiles in the furnace. As the ore is drawn out from the bottom of the furnace, that which is supported by the sides of the tiles slips down and mixes naturally. A homogeneous mixture is thus obtained at the lowest level.

The furnace is consequently divided into a large number of horizontal cells with diamond-shaped cross-section, the spaces between the edges of the tiles being sealed by the ore resting upon them. As may be seen from Figs. 3 and 4 the channel *b* for the flames connects with the lowest tier of these cells beneath the tiles S_1, S_2, S_3. The flames draw longitudinally through these cells backwards and forwards from tier to tier until they reach the outlet at the top of the furnace. The furnace is consequently analogous to a multiple-hearth reverberatory furnace.

The space occupied by each cell is very large in comparison with the amount of ore contained in it. The fire-proof roof, as well as the perforated blocks, stores up a large amount of heat, which is radiated to the charge lying beneath, after the flame has ceased, and thus the charge resting upon the upper surfaces of the tiles is heated from below, and the liberated quicksilver, which always tends to drop downwards, is driven upwards into the open spaces by this sub-heating and passes out of the furnace in the form of vapor.

Fig. 4

TRANSVERSE SECTION

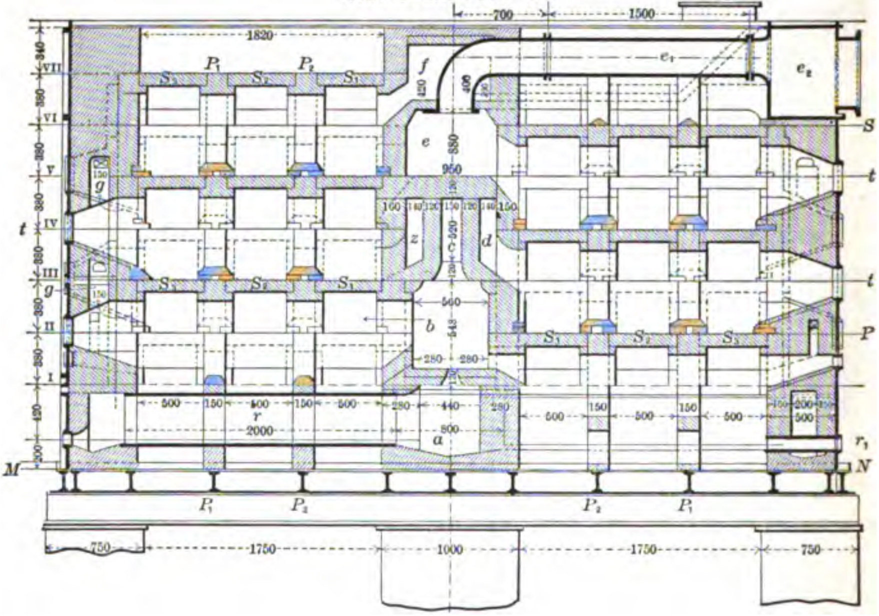

When the flame has passed through the cells formed by the three tiles S_1, S_2, S_3, and the blocks P_1, P_2 (which form the two intermediate walls), and P_3, P_4 (which are let into the middle and side walls), or rather let us say, when the flame has passed over the first hearth, it enters the side wall through a flue which communicates with the upper hearth by means of two window-like apertures. These apertures divide the flame, or rather the stream of gases, into two parts, which immediately enter two other cells of the tier above. Thus each upper cell receives half the gases from the two below. In this way a continual mixing of the gases is produced, the temperatures are adjusted, and the roasting proceeds uniformly. In the upper tier the gases are drawn towards the middle wall, where they pass into the channels *d*, forming the connection with the next following third tier of the roasting zone. The same process is repeated until they reach in the fourth tier of the roasting zone the gas-collecting channel *e*, from which they pass through e_1 and e_2 and eight outlet passages to the condensers.

From the channel *b* there are 12 outlets on either side leading to the roasting chambers. The effective distance traversed by the flame amounts in the four stories to 4x1.85 m. = 7.40 m. Thus the furnace practically consists of 24 reverberatory furnaces, each of the length of 7.40 m. These four zigzag paths form together what is called the roasting zone.

Directly above the fourth passageway of the roasting gases, after which they enter the gas-collecting channel, is the drying room. This is provided with a separate means of escape for the water vapor formed, and also for any roasting gases which may now and then find their way there from the fourth tier of cells on account of the ore not slipping down fast enough. This consists of the channels f, f_1, which have their outlet at f_2, whence two tubular flues lead to the condensers. In this drying room the ores are completely freed from moisture by means of the heat contained in the furnace gases, the temperature of which is thus reduced to 360° C. Thus the ores enter the roasting zone hot and perfectly dry. This arrangement was used by me for the first time in the furnaces at Siele and alone made possible the treatment of the clayey, pyritous ores of that mine.

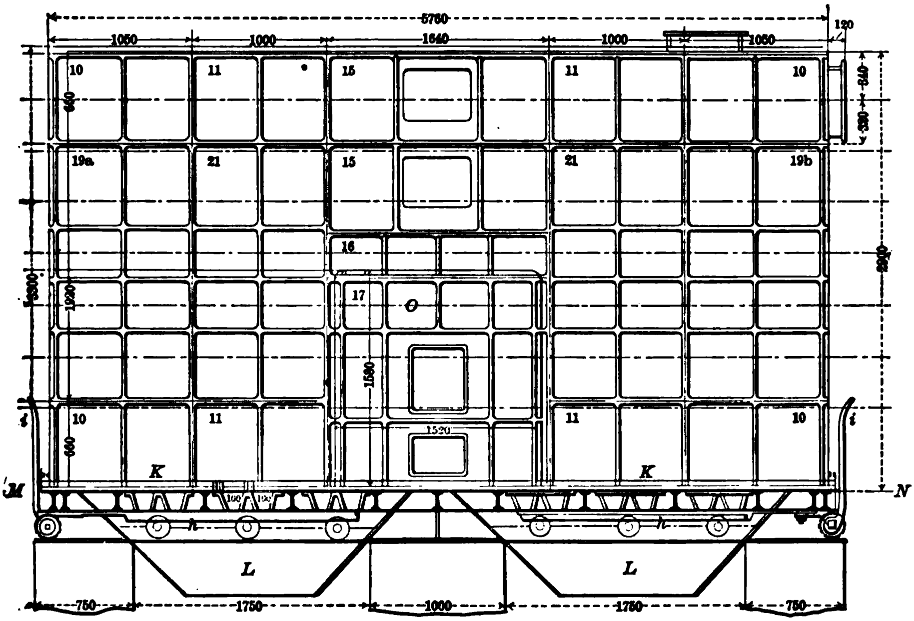

Fig. 5
SIDE ELEVATION

Beneath the roasting zone is the so-called residue chamber, the roof of which is formed by the lowest row of tiles. The space beneath these tiles is in communication on the one side with the channel b, and on the other side with the roasting zone by means of vertical flues in the side walls. The removal of the furnace gases or quicksilver vapors, which are often carried down with the residues, is thus rendered possible, as well as the complete roasting of any particle of ore which may have penetrated so far.

In this residue chamber there are 24 elliptical tubes, r, 12 on each side, in which the air necessary for roasting and combustion is preheated, at the same time cooling the residues to such an extent that they can be discharged at a temperature below 100° C. The air heated in these tubes from 300 to 600° C., is collected in the chamber *a*, from which it is conducted to the fire boxes and into the flue *b*. In the flue *b*, or the combustion chamber as it is better named on account of its large dimensions, the gases have a small velocity which gives sufficient time for their complete mixing and combustion with the upper and lower supplies of highly heated air, the latter being provided in a greater quantity than is theoretically necessary. The grates being fired alternately, the highly heated air from one flows against the smoky flame of the other just filled with fuel, and causes a complete combustion of the smoke, so that clear flames, rich in oxygen, enter the roasting chambers. The even distribution of the gases through the 24 cells is regulated by the chamotte dampers, *g*, placed in the flues of the side wall.

ČERMAK-SPIREK SCHÜTTRÖSTOFEN

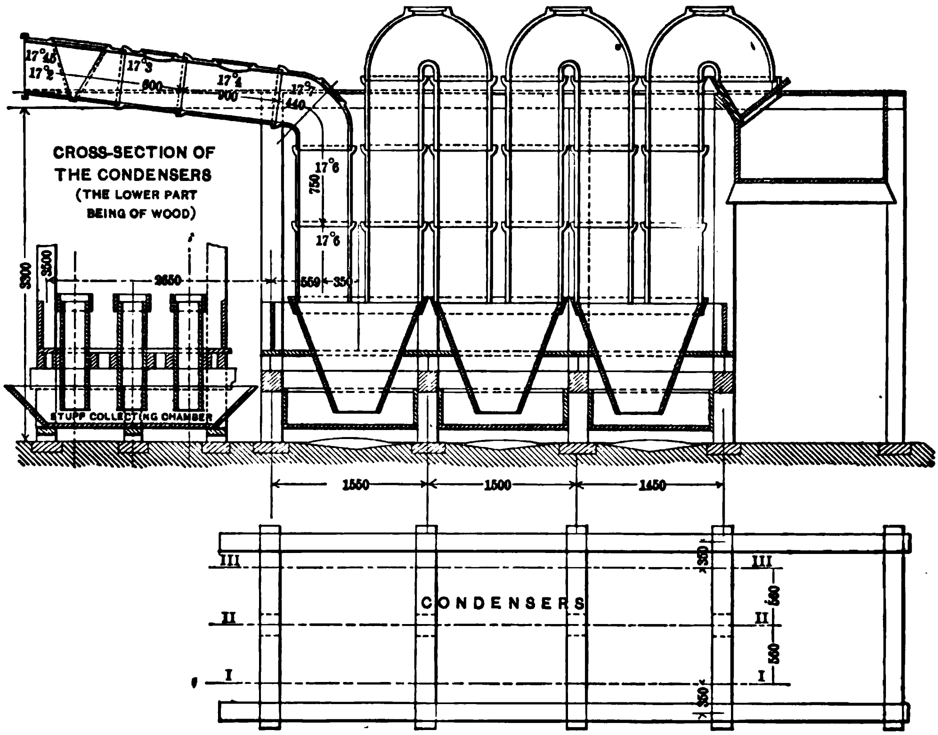

Fig. 6

The withdrawal of the residues is accomplished by opening gates, *K*, through which they fall into the passage between the two chambers of the furnace, where they are cooled and sluiced out by a powerful stream of water from a reservoir containing the water which has been used for cooling the condensers. In addition to its economic and hygienic advantages, this washing away of the residues has the further merit of affording the safest control of the work done, since every trace of cinnabar in the residues remains on the bottom of the canal and can readily be seen.

The capacity of the furnace depends on the grade of the ore and its chemical and physical characteristics. The low-grade clayey ores of Siele remain three hours in the furnace; the calcareous and siliceous ores of Cornacchino and the siliceous ores of Montebuono two hours. The capacity at Siele is 12 to 16 tons per 24 hours, at Cornacchino 20 to 26 tons. In Montebuono the capacity of the medium-sized furnace is 8 to 12 tons per 24 hours.

After the residues have been discharged the ore slides from the cells above to fill the empty space. Thus the expensive hand labor of the ordinary reverberatory furnace is avoided, in which the discharging of the residues alone takes a whole hour, an operation performed in the continuous furnace in three to five minutes.

Peep-holes are provided for supervision and for assisting the roasting by means of the insertion of iron rods. When spots are discovered on the charging floor, where the ore has not fallen into the furnace, any obstruction which may have formed at the entrance to the drying chamber must be broken by means of an iron rod, and the ore forced down.

Supervision is generally devoted to the two lowest tiers of the roasting zone, where the temperature varies between 600 and 800° C. This is unnecessary in the two upper tiers, where the ore at a temperature of 400 to 600° C. flows almost like water.

The temperatures in the furnace are as follows: In the combustion chamber, 800 to 900° C.; in the first tier of the roasting zone, 700 to 800°; in the second, 500 to 600°; in the third, 500°; in the fourth, 360 to 400°; in the collecting and outlet passages, 260 to 360°. The drying chamber is heated only by the furnace gases from below and has a temperature of 100 to 200° C. A bed of ore 60 cm. thick closes the openings into the drying chamber, thus keeping the charging-floor completely cold and preventing the escape of vapor and the radiation of heat.

Leaving out the quicksilver fumes, the composition of the gases which pass from the furnace is as follows:

CO_2	16%	20%	22%	Air	26%	25%	21%
CO	2.0	1.5	0.5	N	54	53	51

The volume of air is 1.5 to 2.5 of the theoretical.

The actual work performed at the furnace is easy, the manual labor being reduced to a minimum. It consists in attending to the fires, discharging the residues by simply pressing a lever, in the supervision of the descent of the ore in the two lower tiers of the roasting zone, and in charging the ore. Two workmen are sufficient, one on the charging floor, the other as fireman, per shift of 12 hours.

The ore is conveyed in cars, holding 500 kg., from the ore-house to the scales, and weighed. A small spadeful is taken from each car as a sample. The daily work of each furnace is controlled by two analyses, which are made by Eshka's method, used commonly in all quicksilver works.

At Siele and Cornacchino the ore as it comes from the mine is classified into coarse ore above 35 mm. and mixed ore below 35 mm. If the moisture exceeds

7%, they are dried separately. The rich ore, which comes direct from the mine or is obtained by spalling, is treated in the small continuous roaster, one-twelfth the size of the large roaster. The stupp, still containing 5 to 30% metal after the quicksilver has been mechanically extracted, is treated by distillation in this furnace. The small amount of rich ore necessitates the use of a small roaster. The quantity would be inappreciable when mixed with a large amount of poor ore, and would only produce an unnoticeable enrichment in quicksilver of the large volume of the furnace gases. In the small furnace they are roasted with the least fuel, the gases remaining rich and in small quantity. This gives a very productive condensation, so that nearly 90% of the Hg is obtained in the first stupp tank of the condenser.

A medium-sized furnace is used at Siele, and a similar one at Montebuono. These have six tiers of tiles in the side chambers, thus being half the size of the large furnace. Otherwise all the details are the same. It has four condensing towers for the furnace gases and two for the water vapor.

Three shaft furnaces are used in Siele to treat the ores above 35 mm. In Cornacchino one shaft furnace is being reconstructed, and in Montebuono there is one with chamber-condensation. The single-shaft furnace in Siele has been reconstructed and possesses a Cermak condenser with two pipe towers. The two shaft furnaces rebuilt in 1896, form together a double furnace, separated by a wall. It is square in section, each side being 1.20 m. long. A separating wall was put in, as experience had shown that the charges were liable to upset (*umkippen*) in shafts of large dimensions. This wall serves also as a retainer of heat.

The walls of the shafts rest upon arches supported on pillars, the bases of which rest on plates to prevent the metal from penetrating into the foundations. The inclined floor is cemented, and an iron collecting pan is prepared to catch the quicksilver which in case of irregularities in the draught may escape from the furnace with the other vapors. The furnaces by these means are protected against large losses, consequently they have only to be braced, and not sheathed with iron.

The three shaft furnaces treat 18 tons of ore in 24 hours, charged with 360 kg. of hard charcoal. Two workmen suffice for the charging floor and two to discharge the residues per shift of 12 hours. The same number of men could attend to four furnaces.

In Siele one muffle furnace remains from the old plant. It was reconstructed by the engineers Nathan and Spirek for the purpose of increasing its capacity and making the work more healthful. Muffles with two stories are used. The furnaces themselves are connected with the central chambers, that is, they are under a continual depression. The removal of the residues by means of a special mechanism was also introduced.

Condensation of the Quicksilver.—Quicksilver becomes fluid at 360° C., and it should therefore be easily condensible. This indeed is the case with gases in which the mercury vapors form the main constituent. It is exactly the opposite in treating poor ores in large quantities, 15 to 30 tons per furnace per day, where in dead-roasting thousands of cubic meters of combustion products and steam are produced, in addition to the excess of air used. In this immense quantity of gases the quicksilver vapor is present in very small proportions. Consequently in order to cool the gases and solid matter, and separate all condensible vapors, a very large and scientifically constructed apparatus is necessary, in which enough time may be given to the mercury to condense and settle.

The solid constituents of the escaping gases are: Particles of ore, ashes, and soot from imperfect combustion or formed by the reduction of CO_2 to CO. The most important condensible constituents are: Quicksilver, water, sulphates, salts of mercury, and sulphuric acid. The gases absorbed by water are: Sulphurous acid, ammonia, hydrocarbon compounds, etc.

Many of the solid particles are caught on the sides of the condensing pipes, fall into the collecting tanks, and mix with the mercury, forming the so-called "stupp." The stupp in the first collecting tank is so rich that 20 to 30% mercury can be collected by the mere process of stirring. The greater part of the metal, however, and in the case of low-grade ores all of it, remains in the stupp, and is recovered by special machines or by a simple rubbing on an inclined surface, after being mixed with slaked lime, hot ashes, or clay. Ninety per cent of the total metallic extraction is thus recovered, 10% remaining in the stupp, which assays 15 to 30% metal, and is burnt in the small continuous roaster or in the muffle furnace. In the Monte Amiata works extractors, similar to the Exeli stupp-presses, are alone used.

The variations in the construction of the condensers is very large, ranging from simple aludels, sprinkled with water, to pipes of large and small diameters, of every conceivable material, wood, cement, clay, glass, sheet iron, cast iron, etc. The continuous roasters and shaft furnaces in Siele, Cornacchino, and Montebuono are provided exclusively with Cermak condensers, which have already been described. The condensing apparatus of the large continuous roaster is divided into two parts by an intermediate mixing chamber of wood. The first condensers are cleaned every week, the second once a month. This work is carried on without the slightest annoyance, as the quantity of ore charged into the furnace is lessened and half the condensers disconnected by means of the valves, placed at the beginning and end of each series. The covers are then removed and the open pipes cleaned with scrapers and brooms. They are finally washed with water, brought under pressure in rubber hose.

From the second condensers the whole material runs into flat wooden channels placed 2 m. from the floor, which thus permit of complete supervision. Thermometers, placed in the condensers, allow the temperature to be read at any time, and this is noted and entered up twice a day. The depression at each furnace is measured by means of manometers. These are also placed in the main condensing chambers and at the blower. As the gas passages, condensers, and dust chambers are large, so as to give the gases the minimum velocity, alcohol manometers are used in them with a tube inclined 1 in 10, which gives 0.1 mm. pressure.

The central condensing chambers yield low-grade stupp, but in such quantity that two tons of quicksilver are obtained from it yearly. All the rooms are provided with double floors, the lower one being cemented. Any spilled mercury is caught in the vessels, placed at the lowest point of the lower floor.

The results of work done in the three continuous roasters from 1891 to 1897 are shown in the following tables:

WORKING RESULTS OF THE CERMAK-SPIREK CONTINUOUS ROASTERS IN SIELE FROM 1891 TO 1897.

ROASTER NO. 1.

Length of Campaign.		Charges.							Extraction of Quicksilver, Tons.	Loss of Quicksilver.	
		Ore.			Stupp.			Total Hg Tons.			
From	To	Tons Ore.	Per Cent.	Tons Hg.	Tons	Per Cent.	Tons Hg.			Tons.	Per Cent.
May 25, 1891	April 21, 1892	1,841	5.80	106.8	....	... .	....	106.8	87.9	18.9	17.00(*a*)
May 10, 1892	April 22, 1893	1,865	5.45	101.7	12.22	25.24	3.08	104.7	101.4	3.3	3.20
May 4, 1893	May 27, 1894	2,243	4.43	99.5	11.43	25.84	2.95	102.5	99.6	2.9	2.80
June 16, 1894	April 20, 1895	1,887	2.60	47.4	28.20	22.41	6.33	53.7	50.2	3.4	6.48
Nov. 1, 1895	Nov. 27, 1896	1,755	2.31	40.5	39.10	1.99	7.78	41.3	38.8	2.8	5.96
Jan. 21, 1897	Oct. 31, 1897	1,732	1.66	28.8	....	....	....	28.8	27.6	1.2	4.20
		11,273	3.78	424.7	90.95	22.3	20.14	437.8	405.5	32.1	7.00

ROASTER NO. 2.

May 10, 1892	April 22, 1893	491	6.98	34.30	7.87	37.6	2.96	37.26	35.16	2.10	5.65(*b*)
May 4, 1893	May 27, 1894	704	5.42	38.20	15.64	33.20	5.22	43.44	41.16	2.28	5.25
June 14, 1894	Oct. 8, 1895	866	2.80	24.26	50.47	25.41	12.82	37.09	34.65	2.44	6.59
Oct. 19, 1895	Oct. 27, 1896	611	4.29	26.29	12.55	30.00	3.77	30.07	27.89	2.18	7.26(*c*)
Oct. 22, 1896	Aug. 20, 1897	557	2.14	11.95	....	....	.. ....	11.97	11.40	0.54	4.56
		3,229	....	135.00	86.53	....	24.77	159.8)	150.26	9.54	6.2

ROASTER NO. 3.

March 18, 1895	Oct. 26, 1896	637.4	2.26	144.52	....	....	....	144.52	126.19	18.33	12.69(*d*)
Nov. 6, 1896	Oct. 31, 1897	433.1	1.76	76.37	....	....	....	76.37	72.76	3.61	4.8
		1,070.5	2.00	220.89	.... ..	....	... .	220.89	198.95	21.94	9.9

TOTALS FOR ALL FURNACES.

1891	1897	15,207	......	780.59	177.48	....	44.91	818.49	754.71	63.58	8.4

(*a*) Absorption by central condensing chamber, 5%; absorption by its own condenser, 7%; real loss, 5%; total, 17%.
(*b*) The absorption by iron condensers is unimportant.
(*c*) Shows the absorption when condensers were renewed, where the inferior parts were made of wood.
(*d*) Shows loss from condensers, in which a large amount of wood was used.

Furnace No. 1 is a medium Cermak-Spirek continuous roaster of a capacity of eight tons per day of the clayey ores of Siele. During the first year this furnace alone possessed central condensing chambers. The large losses are therefore to be accounted for by absorption in the pores of the walls, roofs, floors, and partitions. As almost all the chambers and passages are made of wood, large quantities of mercury were probably used in impregnating them. In the clean-up, it is impossible to wash these walls and wooden surfaces completely. The stupp being always of a fatty nature produces a sort of mercury salve on being rubbed, which results in the mercury passing still more into the pores. If, therefore, we strike out from the calculation of the percentage of loss the results of the first year's work, the following figures are obtained:

Furnace	Quicksilver Charged. Tons.	Quicksilver Recovered. Tons.	Loss.	
			Tons.	Per Cent.
No. 1	331.00	317.40	13.40	4.00
No. 2	122.54	115.10	7.44	6.00
No. 3	76.37	72.76	3.61	4.80
Total ...	529.91	505.46	24.45	4.60

It may therefore be accepted as a fact that these continuous roasters work with a loss of from 4 to 5% after the impregnation of the condensing apparatus is completed, and that in the event of new condensers being put in, as in furnace No. 2, the losses may exceed these figures by 6% on an average. The quicksilver which has thus soaked into the parts of the condenser, and which clings to the walls, is recovered when any renewals have to be made. It represents therefore only so much capital locked up but not lost.

Cost of Construction.—The cost of a large Cermak-Spirek continuous roaster is as follows: For the furnace proper: The cast-iron armor plate, sheet-iron bottom plates, discharging apparatus, air-heating tubes, and trusses, 40 tons at 35 fr., 14,000 fr.; first-class material, 5 tons at 100 fr., 5000 fr.; other material used, 2000 fr.; labor of masons and smiths, 2000 fr.; freight and transportation, 2000 fr.; total, 25,000 fr.

For the condensers: 19 tons cast-iron pipes at 20 fr., 3700 fr.; 300 clay pipes at 8 fr., 2400 fr.; wood and timber, 2400 fr.; labor of masons, carpenters, and smiths, 1500 fr.; freight, 20 tons at 50 fr., 1000 fr.; total, 13,000 fr.

The total cost of a works may therefore be estimated as follows: One large continuous furnace and condenser as above, 38,000 fr.; medium-sized continuous furnace, 22,000 fr.; small-sized continuous furnace, 5000 fr.; double-shaft furnace, 8000 fr.; single-shaft furnace, 4000 fr.; the central condensing chamber and stack, 10,000 fr.; machinery, 8000 fr.; one muffle furnace, 9000 fr.; buildings, 40,000 fr.; drying furnaces, 6000 fr.; total cost of plant, 150,000 fr.

The normal daily capacity of the works would be as follows: Large continuous roaster, 16 tons; medium continuous roaster, 8 tons; small continuous roaster, 2 tons; three shaft furnaces, 18 tons; muffle furnace, 1 ton; total, 45 tons. Therefore in 300 working days the works can treat 13,500 tons, containing 1.2% Hg, or 162 tons of metal.

The furnaces, together with the drying and classification of the ore, require 50 men daily, at an average wage of 2 fr. per day, or a total of 100 fr., say in 300 working days 30,000 fr. The consumption of fuel per day in all the furnaces is 20 cu. m. at 4 fr., 80 fr.; sundries, lime and charcoal, 20 fr.; total fuel and sundries in 300 days, 30,000 fr. The actual cost of treatment is therefore 60,000 fr. per annum, or per ton of ore treated 2.20 fr. for wages and 2.20 fr. for fuel, etc. The cost of producing one ton of metal, leaving out the general charges, is 3770 fr.

The following table gives the total production of quicksilver from all the works at Monte Amiata:

Year.	Siele.			Total, Monte Amiata.		
	Ore. Tons.	Hg. Per Cent.	Hg. Tons.	Ore. Tons.	Hg. Per Cent.	Hg. Tons.
1890	1,668	20.	334	....	....	449
1891	2,643	9.8	261	....	....	330
1892	3,658	8.1	296	....	....	325
1893	4,590	5.6	259.9	14,950	1.9	273
1894	4,773	4.8	229.8	15,022	1.7	258
1895	7,758	2.14	158	10,504	1.9	199
1896	9,265	1.6	149	13,701	1.4	188
1897	12,000	1.2	150	19,000	1.0	200

The largest production was in 1890, when Siele produced 334 tons and Cornacchino 115 tons. Since that time it has been decreasing on account of the ore becoming low grade, or rather since the system of stripping the mines has come to an end. This system would have led to the most lamentable results, even to the shutting down of the mines, had not the continuous roasters been introduced by B. H. Nathan. This enabled low-grade ores to be treated successfully on a large scale, thus permitting the mine to be subjected to the most careful examination, and bringing about the introduction of a rational method of mining. It was thus the means of uncovering ore reserves for a number of years, and allowing successful development work to be carried on. At the present moment the mines of Siele and Cornacchino are undergoing a process of slow recovery, thereby insuring work and prosperity for the district.

THE RARE ELEMENTS.

By L. M. Dennis.

In a paper entitled "A Spectrographic Analysis of Iron Ores and Associated Minerals,"[*] W. N. Hartley and Hugh Ramage give the results of their examination of 169 specimens of minerals from different localities. They investigated clay ironstones, spathose ores, black band, brown and red hematites, limonites, magnetites, pyrites, and various aluminum and manganese ores and minerals. Sixty-eight of the samples contained gallium, 30 indium, and 17 thallium. Rubidium was present beyond doubt in 13, and probably present in 70 samples. All of the samples of siderite and many of the pyrites contained indium. In 11 bauxites gallium was present in each case.

Boron.—In The Mineral Industry, Vol. V., there was given a summary of the various carbides prepared by Moissan by means of the electric furnace. It is there seen that the carbides of calcium, strontium, and barium have the general formula $R''C_2$, and are decomposed by water with evolution of pure acetylene gas. The element boron closely resembles carbon in its chemical properties, and Moissan and Williams[†] have prepared the borides of calcium, strontium, and barium with a view to ascertaining whether they resemble the carbides of these elements.

Preparation of Calcium Boride.—1,000 g. of well-dried calcium borate were mixed with 630 g. of pure aluminum in the form of shavings and 200 g. of finely pulverized sugar carbon. The mixture in a carbon crucible was heated in the electric furnace for seven minutes, the current being 900 ampères and 45 volts. Such an amount of aluminum was used as would completely reduce the calcium borate. The carbon was added to prevent the formation of aluminum oxide. After the mass had cooled it was treated first with dilute hydrochloric acid, then with stronger acid, then washed with water, and finally the organic matter which it still contained was removed by digesting it with ether and toluene. The calcium boride remained in the form of a crystalline powder—not absolutely pure, as there were still present small quantities of graphite and boride of carbon. Calcium boride has a density of 2.33 and is hard enough to scratch quartz with ease. Chlorine attacks it at a red heat, forming calcium chloride and boron trichloride. It burns when

---

[*] *Jour. Chem. Soc.*, Vol. CLXXIII., p. 11.

[†] *Comptes Rendus*, Vol. CXXV., p. 629.

heated to redness in the air. It does not act upon water at ordinary temperatures, thus showing a marked difference from calcium carbide. If it be fused in the electric furnace and then dropped into water hydrogen is set free, but no acetylene is formed. This behavior seems to indicate that there is a second calcium boride which contains less boron and is decomposable by water. Chemical analysis showed that the calcium boride possesses the formula CaB_6.

Strontium boride was prepared in the same manner as the calcium compound. Its high density, 3.28, made it easy to separate the boride from accompanying impurities. Its properties resemble those of the calcium boride. Its formula is SrB_6.

Barium boride, similarly prepared, has the formula BaB_6, a density of 4.36, and closely resembles the other borides.

All three of these borides are distinctly crystalline, are sufficiently hard to scratch the ruby, are very stable, and do not decompose cold water as do the carbides. They therefore do not resemble, either in composition or properties, the carbides and silicides of the alkaline earths.

Warren* states that five or six years ago a description was published with respect to the action of boron upon metallic iron, which researches at the time.led to the discovery of the now well-known compound boroneisen. Quite recently some rather remarkable notes have appeared in scientific literature on the preparation of that compound by the aid of electrical furnaces. After a long experience with the element Mr. Warren denied that anything like such a temperature as that of the electric arc is required to form a boroferric compound. Even ordinary ferric borate, obtained by precipitating ferric chloride by means of a soluble borate, may, after drying, be readily reduced, at a red heat, to an amorphous pyrophoric boride; or may be obtained of a silvery whiteness, fusible at a white heat, and containing upward of 6% boron, by melting the above mentioned compound under a layer of borax, the product being of sufficient hardness to cut glass and even scratch flint, the boron being set free in the elementary condition by means of electrodissolution. This is by no means the only way of impregnating iron with boron; on the other hand, it is extremely difficult to prevent the formation of a boride when a mixture of iron oxide and carbon is exposed to a temperature sufficient to melt the cast iron thus produced, provided a fusible borate is used as a flux. Again, borax being such a desirable fluxing agent for metallurgical reductions, this compound is generally made use of in smelting small quantities of iron ores, for the purpose of further examination of the iron thus obtained. This reaction is, however, perfectly useless, provided a fluxable borate has been employed. as 100 samples thus reduced by Mr. Warren all contained more or less boron, averaging 2%, while at the same time the iron in most cases appeared solely as white cast iron, the carbon existing in the combined form; also, as a verification test, samples of cast iron were exposed to different temperatures in common with fusible borates, the analyses of all these samples showing a deficiency averaging from 0.5% to 2% on the total.

---

* *Chemical News.*

Cerium.—G. von Knorre[*] has devised a method for the volumetric determination of cerium in the presence of thorium, lanthanum, and didymium. It is based upon the fact that the yellow or orange-colored ceric compounds are quickly reduced to colorless cerous compounds by hydrogen peroxide in acid solution.

Chromium.—(See chapter on "Chrome Ore.")

Didymium.—L. M. Dennis and E. M. Chamot[†] state that the separation of neodidymium from praseodidymium can be greatly hastened by certain modifications of Welsbach's method of fractional crystallization of the double nitrates of ammonium and the rare earths. These modifications consist in slow crystallization instead of the rapid forcing used by Welsbach, and in the constant addition of lanthanum ammonium nitrate to the praseodidymium fractions to hasten the separation of this latter element from neodidymium.

K. D. Chruschtschoff states that the method by which several years ago he isolated the new element "Russium" is quite similar to that used by Barriere in the preparation of "Lucium." Chruschtschoff has again taken up the investigation of the matter and has obtained from 25 kg. of the mixed earths from monazite 35 g. of an oxide possessing the properties of russium. Both the earlier and recent determinations show that the equivalent weight of the element is 70.5. In addition to the two components of didymium discovered by Welsbach, viz., praseodidymium and neodidymium, Chruschtschoff claims to have isolated a third, glaukodidymium. The salts of this element are blue and its spectrum corresponds to a portion of the neodidymium spectrum described by Welsbach.[‡]

Gallium.—Hartley and Ramage[§] state that the pig iron obtained from the clay ironstone of the Cleveland (England) district contains 0.00304% of gallium.

Glucinum.—P. Lebeau, who earlier described an improved method for the extraction of glucina from beryl,[‖] has recently given the results of further experiments upon the properties of the pure glucinum oxide thus obtained.[¶] Glucina melts and vaporizes in the electric furnace. The fused glucina is a white, crystalline mass which scratches quartz, but not the ruby. Gaseous acids do not act upon glucina at a red heat. Warm concentrated sulphuric acid changes it into anhydrous glucinum sulphate, which, however, becomes soluble in water only after long boiling. Fluorine attacks the dry oxide at a red heat, forming a volatile fluoride. Chlorine, bromine, and iodine are without action. Glucina is reduced by silicon and boron, but is not acted upon by potassium, sodium, aluminum or magnesium.

Helium.—From a mine recently discovered in Ryfylke, Norway, various minerals containing rare earths have been obtained. Clevite is among them, and it is now offered at £2 per kg., or 1s. 4d. per oz. It yields 1.5 to 2 c.c. of helium per gram; therefore an ounce bottleful of helium is worth at least 8d., and this does not include the cost of isolating it.

---

[*] *Zeit. für Angewandte Chemie.* 1897, pp. 685, 717.

[†] *Jour. Amer. Chem. Soc.*, Vol. XIX., p. 799.

[‡] *Jour. Russ. Phys. Chem. Ges.*, Vol. XXIX., p. 206.

[§] *Proc. Roy. Soc.*, 1897, Vol. LX., p. 393.

[‖] THE MINERAL INDUSTRY, Vol. IV.

[¶] *Comptes Rendus de l'Acad. des Sciences*, Vol. CXXIII., p. 818.

Lithium.—A compound of lithium and hydrogen, of the formula LiH, has been prepared by Guntz.* It is made by heating metallic lithium to bright redness in a current of hydrogen. It decomposes water with evolution of hydrogen, and as it is stable in the air and can thus easily be transported, Guntz suggests that it might be of value in the commercial preparation of hydrogen. One kilogram of the lithium hydride will yield 2,780 liters of hydrogen.

Rubidium.—Hugo Erdmann and Paul Köthner describe† their recent researches upon the preparation of metallic rubidium and certain of its compounds. The methods which have been previously used in making metallic rubidium are unsatisfactory, either because of the impurity of the product or the smallness of the yield. In 1888 Beketow suggested heating rubidium hydroxide with metallic aluminum, but as the reaction proceeds according to the equation:

$$2\ RbOH+Al=Rb+RbAlO_2+H_2,$$

only half of the hydroxide is converted into the metal even if the highest theoretical yield were obtained. As a matter of fact, only 30% was obtained by Beketow. The method suggested by Clemens Winkler in 1891, of reducing rubidium carbonate or hydroxide with powdered magnesium, gives quite satisfactory results, and can be carried out on a small scale even in glass. Erdmann and Köthner found, however, that to prepare the metal in large amounts and free from impurity, glass tubes must not be used, because the metallic rubidium attacks the glass even at moderate temperatures and sets free silicon. They state that iron Mannesmann tubes, or the patent welded tubes used in hydraulic machinery, answer the purpose admirably. They issue a warning against repetition of Winkler's reduction of rubidium carbonate by magnesium. When they operated with as small an amount as 10 g. of rubidium carbonate a very violent explosion of rubidium carbonyl occurred when the cold tube was opened. On the other hand, however, the reaction between magnesium and rubidium hydroxide takes place easily and without danger if the following details be strictly followed:

A seamless or patent welded iron tube about 1 m. in length, 15 mm. internal diameter, and 3 mm. thickness of wall, is bent about 15 mm. from one end in an obtuse angle (about 125°). This tube is carefully cleaned and a bunch of long, fine steel turnings, also carefully cleaned, is pushed into the tube as far as the bend, forming there a sort of loose stopper. A current of hydrogen is then passed through the tube, which is highly heated during the passage of the gas; 20 g. of freshly fused rubidium hydroxide, free from water, and 10 g. of magnesium filings, not powder, are quickly ground together in a warm mortar, and the mixture shaken as rapidly as possible into the longer branch of the iron tube. The stopper of steel turnings keeps the mass from falling through the tube, which is then laid in a small combustion furnace, and pure, dry hydrogen is passed in. The end of the shorter arm dips beneath liquid paraffine contained in a porcelain dish. The tube is now heated with care until bubbles of hydrogen begin to come rapidly through the paraffine. The

---

* *Comptes Rendus de l'Acad. des Sciences*, Vol. CXXII., p. 245. † *Annalen der Chemie*, Vol. CCXCIV., p. 55

current of gas is then turned off and the heating is discontinued until the liberation of hydrogen from the rubidium hydroxide has ceased. The tube is then heated to redness, the rubidium distilling and falling into the paraffine in the form of shot. As rubidium melts at 38.5°, these little spheres unite easily, forming a large globule of glistening metal, which even when cold is as soft as wax. The reaction which takes place is expressed by the equation:

$$2\ RbOH + 2\ Mg = 2\ Rb + 2\ MgO + H_2.$$

The yield was 14 g. instead of 16.6 g., since some of the metal adhered to the walls of the tube.

Erdmann and Köthner determined both the specific gravity and melting point of the metallic rubidium, and obtained results that agreed very closely with those given by Bunsen in 1863, namely sp.gr., 1.522 at 15°, and melting point 38.5°.

Thorium.—Moissan and Etard* first prepared pure thorium oxide from orangite by the method suggested by Böttinger.† The carbide was then prepared by highly heating a mixture of this oxide and sugar charcoal. Seventy-two grams of thorium oxide and 6 g. of sugar charcoal were mixed and formed into little cylinders by heavy pressure, the cylinders were then placed in a carbon tube closed at one end and this was heated in an electric furnace with a current of 900 ampères and 50 volts. Reduction took place in four minutes. It was found that there had been formed a crystalline thorium carbide of approximately the formula ThC_2. This is acted upon by cold water, solid, liquid and gaseous hydrocarbons being formed. An analysis of one of the gas mixtures thus liberated showed: Acetylene, 47.05%; methane, 31.06%; ethylene, 5.88%; hydrogen, 16.01%.

In separating thoria from zirconia, Marc Delafontaine fuses the powdered mixture, ore or oxides, in a platinum dish with twice its weight of acid potassium fluoride (KHF_2). The zirconium is separated as potassium fluozirconate from the solidified mass by means of boiling water containing a few drops of hydrofluoric acid. The insoluble fluorides, when decomposed by sulphuric acid and heated below a dull red heat, will yield sulphates of thorium, cerium, and the other earths. Silica, if present, will be expelled as silicon tetrafluoride. The sulphates are dissolved in water and precipitated by oxalic acid. Upon treating these oxalates with a hot, saturated solution of ammonium oxalate, the thorium oxalate is dissolved. The zirconia is precipitated from the fluozirconate by ammonium hydroxide. Any titanium which may be present in the original mixture is transformed to a fluotitanate, soluble in hot water.‡

Zirconium.—The United States Consul-General at Melbourne reports that among the many valuable discoveries of late in the colony of Tasmania, one which has created much interest in mining circles has recently been partially developed. It consists of a deposit of zircons, associated with other gems and rare earths. The gems found in this deposit are chiefly zircons, sapphires, and cinnamon rubies. The first named are found in large quantities and in every variety of color. Many of them have been cut and polished,

---

* *Annales*, Vol. XII., p. 427. † THE MINERAL INDUSTRY, Vol. IV. ‡ *Chem. News*, Vol. LXXV., p. 230.

with very gratifying results, being hard and of good luster. The sp. gr. of the zircon is 4.7, thus being heavier than the diamond, which is 3.75; its hardness, compared with the diamond, is 7, the latter being 10. It is of high commercial value for use in the manufacture of mantles for incandescent lights. The composition of pure zircon is 64% zirconia and 36% silica. Analyses by Dr. W. H. Gaze of Melbourne of two samples of zircon from the above-mentioned deposit gave 63 and 64% of zirconia, thereby testifying to the purity of the gem. The rare earths, viz., lanthanum, thorium, didymium, niobium, erbium, yttrium, cerium, and chromium are all present in greater or less amount.

The property which contains this deposit has been purchased by a Melbourne syndicate. It comprises an area of 105 acres, situated on the northwest coast of Tasmania, about midway between Emu Bay and Circular Head, and is easily accessible by road from either port, besides being heavily timbered and well watered. A large amount of work has already been done in preparing for sluicing.

Associated with the zircon is a very rare mineral known as pyrochlore, of which there are several distinct varieties. They consist chiefly of the two rare metals, niobium and uranium, with some of the cerium metals. Pyrochlore may be described as niobate of uranium, with cerium, thorium, yttrium, didymium, and lime. The percentage of each metal varies, and often some of them are absent. Thorium and yttrium are often present to the extent of 10% each. At present Dr. Gaze has only determined niobium, uranium, and titanium, the residue containing the rare earths. Uranium is present in very considerable quantities.

Dr. Gaze reports as follows: "In the first place, the mineral varies much in composition. It is, therefore, impossible to get two results alike, especially when one has to pick out hundreds of little grains to obtain enough to operate on, and there is no certainty that all the grains are identical. The mineral is of very complex nature, as the following analysis demonstrates. In some instances chromium has to a great extent replaced uranium; in others lanthanum and didymium replace thorium and yttrium. In some instances only traces of the rare earths were obtained.

"Assay of Shekleton minerals, niobate of uranium and chromium, a variety of pyrochlore: Uranium, 5 to 0.5%; chromium, 10.5 to 12.5%; titanium, 12 to 13%; iron, 25.5 to 27.7%; magnesium, 2.2 to 0.5%; alumina, 7.3 to 6.2%; lime, 2.6 to 1.5%; silica, 15 to 12%; didymium, 7.5 to 0.5%; lanthanum, 6.2 to 2.2%; thorium, 1% to traces; yttrium, 1.5% to traces."

SALT.

The production of salt in the United States in 1897 was 13,153,524 bbl. against 15,707,908 bbl. in 1896. Upward of 90% of the total in 1897 was obtained by pumping as brine. There are but a few mines in the United States at the present time where salt is won through underground openings. There is one in Louisiana, two in Kansas, and a group, operated by one company, in the western part of the State of New York. There is a small amount of rock salt produced in Utah, Nevada, and California, but this is obtained by open-cast work in the beds of old salines which have dried up.

A large proportion of the salt production of the United States is now consumed in the manufacture of soda ash, caustic soda, and bicarbonate of soda, which is carried on in Virginia, New York, Michigan, and at one works in Maine. The salt used by these works is included in our statistics, and since there was a considerable increase in the make of soda ash in 1897, there was a corresponding increase in the production of salt for this purpose. Otherwise the salt industry was not prosperous in 1897, New York suffering particularly from the depression, and many salt producers were obliged to suspend operations, some temporarily and some permanently.

Of the total production in 1897 rock salt amounted to 225,023 short tons, against 231,886 short tons in 1896. The consumption of salt for alkali manufacture is estimated at 364,124 short tons in 1896 and 505,674 in 1897. This salt was produced entirely in the form of brine. For further details as to the alkali industry of the United States reference should be made to the caption "The Chemical Industry," elsewhere in this volume.

PRODUCTION OF SALT IN THE UNITED STATES.

(In barrels of 280 lb.)

Year.	California	Illinois.	Kansas.	Louisiana.	Michigan	Nevada.	New York.	Ohio and W. Virginia.	Utah.	Other States.	Total Barrels.	Total Short Tons.
1892.........	235,000	60,000	1,232,850	192,850	3,812,054	20,000	4,400,000	738,000	900,000	225,000	11,815,754	1,654,206
1893.........	312,850	65,000	1,607,000	172,500	(a)3,514,485	7,988	4,413,181	(b)925,620	438,002	182,435	11,639,061	1,629,469
1894.........	324,623	65,000	907,000	185,000	3,485,428	5,100	6,529,694	1,342,400	821,565	473,821	14,039,631	1,965,548
1895.........	365,280	68,000	1,168,951	159,775	3,929,342	8,428	5,919,155	1,704,000	411,784	541,139	14,275,854	1,998,619
1896.........	462,450	55,660	1,624,121	173,117	4,321,144	7,818	6,714,394	(b)1,829,771	178,393	343,440	15,707,908	2,199,107
1897.........	486,593	58,764	1,224,980	209,392	4,838,140	3,540	4,172,631	(b)1,010,300	641,907	507,277	13,153,524	1,841,493

(a) Amount inspected. (b) Includes the production of Pennsylvania.

Kansas.—The salt industry of this State dates from 1887 when holes were drilled at Lyons in search of oil and gas, and at a depth of 800 ft. rock salt was struck which proved to be over 300 ft. thick. In 1890 the Lyons Rock Salt Co. was formed and a shaft 7 × 16 ft. was sunk 1,065 ft., passing through 265 ft. of salt. This mine is still operated, but comparatively little rock salt is now produced in Kansas. A small mine is worked at Kanapolis, and two mines 810 ft. deep have been opened at Kingman, both of which are idle at the present time. Most of the salt production of Kansas is obtained from brine in deep wells in the vicinity of Hutchinson. The wells are drilled 8 in. in diameter and cased down to 150 ft., after which a 6-in. hole is drilled down through the salt stratum and cased to the top of it. A 2-in. pipe is then inserted to within 15 ft. of the bottom of the hole. Fresh water is forced down through the inner pipe and saturated brine is drawn out through the outer.

The brine is drawn from the storage tanks to the evaporating pans, of which three kinds are used, namely, the ordinary pan, the grainer and the vacuum pan. These processes as carried out in Kansas do not differ essentially from the practice elsewhere.

The saline deposits of Kansas extend from Ellsworth and Saline counties southward to the southern boundary of the State, and in breadth stretch across two or three counties, while there is evidence of salt outside of this area. The thickness of the salt varies from 300 to 370 ft. and it is of exceptional purity, assaying from 97 to 98% sodium chloride.

New York.—The salt industry of this State is of great importance. Originally Syracuse was the center, but after the discovery of rock salt in and near the Genesee Valley the center of the industry was transferred to the new district, where richer brines were obtainable. About 15 miles south of Syracuse, at Geddes, the Solvay Process Co. discovered a large deposit of rock salt which it extracts by solution and conveys as a highly saturated brine through a pipe line to its soda-ash works at Syracuse.

The production of salt in the Onondaga reservation in 1897 amounted to 153,358 lb. This does not include the yield of the Solvay wells, about 41 in number, of which the brine goes directly to the Solvay works for the manufacture of bicarbonate of soda, etc. The remainder of the salt production of New York is derived from the Genesee and Wyoming valleys, in the western part of the State. Rock salt is produced by the Retsof Mining Co., which has opened four mines, namely, the Retsof, Greigsville, Lehigh, and Livonia. Only the Greigsville and Livonia were in operation in 1897.

Virginia.—The salt production of this State is derived from the vicinity of Saltville, in Washington County, where brine is pumped from a depth of about 200 ft. The salt bed which occurs between rocks of the Sub-Carboniferous series is of great thickness.

SALT PRODUCTION OF THE CHIEF COUNTRIES OF THE WORLD. (*a*)
(In metric tons and dollars.)

Year.	Algeria.		Austria.		Canada.		France.		Germany.	
1892	24,784	$104,086	288,424	$9,982,094	41,253	$162,041	973,747	$3,353,390	1,167,264	$4,168,915
1893	19,008	93,416	305,586	9,811,404	56,525	195,926	1,114,327	3,317,471	1,173,565	4,230,250
1894	17,830	74,763	311,597	11,655,048	51,890	170,687	890,607	2,287,624	1,257,527	4,359,578
1895	25,758	102,900	278,875	11,472,855	47,515	160,455	871,312	2,406,155	1,212,336	4,340,821
1896	19,658	85,121	308,932	9,309,068	39,880	169,693	1,042,614	2,473,568	1,303,319	4;416,952

Year.	Greece.		Hungary.		India.		Italy.	
1892........	21,600	$345,600	176,368	$7,538,893	913,292	$1,794,280	23,721	$88,074
1893........	18,329	298,264	167,209	7,010,400	868,180	1,594,480	25,392	96,721
1894........	21,810	332,436	169,282	7,153,440	1,318,198	(b)	30,793	114,835
1895........	22,238	335,800	169,395	6,456,480	1,120,882	(b)	29,315	110,190
1896........	22,800	344,280	(b)	....	1,043,172	(b)	29,274	113,322

Year.	Russia.		Spain.		United Kingdom.		United States.	
1892........	1,458,508	$2,404,000	682,634	$2,596,741	1,987,828	$4,307,005	1,500,686	$5,732,620
1893........	1,351,056	2,224,284	151,464	85,052	1,954,813	3,676,110	1,478,245	5,617,331
1894........	1,354,218	1,723,200	186,121	228,874	2,271,687	3,818,145	1,783,133	7,578,315
1895........	1,540,194	2,883,748	326,320	952,098	2,208,025	3,548,755	1,813,135	6,472,892
1896........	(c)	....	521,751	1,153,880	2,054,715	3,333,065	1,995,017	5,828,250

(a) From the official reports of the respective countries. For Austria, Hungary, Russia, Spain, and the United States, the production of all kinds of salt is given; Germany, rock salt and common salt; Greece, sea salt; France, rock and sea salt; Algeria, sea and rock salt; Italy, rock and salt from brine; United Kingdom, rock and brine salt; India, salt which is liable to British salt tax only, and does not include salt made in certain native States. (b) Not reported in the official statistics. (c) Statistics not yet published.

According to a recent report of the British Salt Chamber of Commerce there has been no new discovery of rock salt or brine in Great Britain during the last five years, except in the Isle of Man, where salt was encountered during some borings for coal; nor has there been in any part of the world any noteworthy expansion of the existing manufacture. Occasional efforts have been made in South America and Spain, and elsewhere, to utilize long-known deposits of salt which are hopelessly remote from railway or ocean, from labor or fuel, or otherwise devoid of commercial importance. In the production of the United Kingdom there has been little change, except some readjustment to topographical and other economic advantages. All the salt districts of the country, especially the most advantageous, have been developed far in excess of either their respective local or foreign demand. The natural result has ensued; prices no longer offer any inducement to the enterprise of increasing the plethora. Germany having a few years ago reached the limits of her own consumption has been pushing her salt into the markets of neighboring countries, and with less success into more remote parts of the world. Her strength lies in the facilities and cheapness of her inland navigation and ports of shipment. In the United States the increase in domestic production, caused by the indiscretion of English manufacturers in 1889 and 1890, has been partially corrected, but reports still show considerable struggles between the chief districts producing in excess of demand. The Red Sea has provided more salt for India. It is of inferior quality, but like the Hamburg article, is mixed with English salt, and goes into consumption at a lower price. When Eastern freight, and consequently the price of English salt, is at a normal level, the market of these lower grades is limited. The Indian government has powers under Adulteration acts to restrain this mixture, but has not yet seen fit to exercise them.

China.—The importation of salt into China is forbidden. The trade in salt is a government monopoly. For purposes of the salt administration the empire is divided into seven circuits, and the salt produced in one circuit may only be sold within its own limits.

England.—The exportation of Cheshire salt from Liverpool, Runcorn and near-by points in 1897 was 546,765 long tons against 569,710 in 1896. Shipments of rock salt are not included. These amounted to 50,661 tons in 1896 and 43,665 tons in 1897.

India.—The total quantity of salt produced in India in 1896 was a little over 26,500,000 maunds (989,101 metric tons). This was much less than the production of 1895, but it was in excess of the average of the three years preceding 1895. The production fluctuates from year to year according to seasonal conditions. This quantity was supplemented by 9,065,639 maunds (338,825 metric tons) of imported salt, the total quantity produced and imported amounting to 35,731,082 maunds (1,333,646 metric tons), over 74% of the whole being produced in India. Importation is practically limited to salt brought to Bengal and Burma from England, Germany, other countries in Europe, Aden, Muscat, Jeddah, and a few other places.

Spain.—The production of salt amounted to 500,000 metric tons in 1897, a decrease of 21,751 tons from 1896. The exports were 235,871 tons, a decrease of 18,932 tons.

SLATE.

BY H. L. J. WARREN.

PROBABLY less is known of the resources of American slate and the extent of the trade, outside of the few specially interested, than of any manufacturing industry of equal importance, but recently attention has been called to them by the remarkable increase in exports of roofing slates. Not only are shipments abroad increasing, but it seems very evident this trade can now be set down as a fixture.

Little is known of the beginnings of American slate making. Probably the first quarry was in the Peach Bottom region, Pa., opened about 1800, which supplied the slates for a stone church built near Delta, in 1805. When this church was pulled down, in 1893, the slates were found in prime condition and were sold to cover a modern building being erected near by. J. W. Williams, in 1811, opened a slate quarry in Pennsylvania at Upper Mount Bethel, Northampton County. Slate was discovered near the Lehigh River in 1840, and the Franklin quarry was operated prior to 1846, and is being worked to-day by the Slatington Slate Co. Alanson Allen, a resident of Fair Haven, Vt., about 1840, began the slate trade of New England, by working a slate-rock cut near his home, to make school slates, not knowing of "stone shingles." Great was his astonishment, on a visit to New York a year or so later, to see school slates covering houses and the finest buildings. Returning home he devoted all his energy to the manufacturing "stone shingles," and thereafter was prominently connected with slate enterprises. A quarry was opened in Monson, Me., in 1849.

Slate of good workable quality and in considerable quantity occurs in many parts of the country, but the quarries which chiefly fill the present market requirements are mostly within a few limited areas in Pennsylvania, Vermont, and New York. What are undoubtedly the best American roofing slates come from Maine, which approach very close to the superior Welsh slates in lightness combined with strength, though the beds are small and the prices so high that in recent years the output of these quarries has cut but a small figure in the total. They are rarely sold beyond the New England States. Near Buckingham, Va., are slate beds the yield from which in 1897 is reported as 14,000 squares (a square being a peculiarly American term, meaning 100 sq. ft. as ordinarily laid on the roof). Massachusetts, Connecticut, Maryland, Michigan, Arkansas, Minnesota, Georgia, Tennessee, Utah, California, and Oregon have demonstrated the existence of slate beds, from fair to excellent in quality, within their borders, though but few quarries are opened and none more than supply small local needs. Their production last year was comparatively insignificant. In March, 1898, some Pennsylvanians were considering a proposition to invest in a slate quarry in Oregon, which was flatteringly reported on.

PRODUCTION OF SLATE IN THE UNITED STATES.

States.	1896.				1897.			
	Roofing Slates. Squares.	Value.	Mfr.'s Value.	Total Value.	Squares.	Value.	Mfr.'s Value.	Total Value.
California	500	$3,500	....	$3,500	400	$2,800	....	$2,800
Georgia	5,697	22,788	....	22,788	None.	....	....	....
Maine	22,987	99,303	$23,760	123,063	15,937	79,885	$12,500	92,385
Maryland	15,498	69,896	1,740	71,636	11,300	41,200	None.	41,200
New York and Vermont	173,891	525,699	95,670	621,369	285,040	775,800	165,870	941,670
Pennsylvania	426,172	1,358,297	328,528	1,686,825	546,920	1,675,500	353,400	2,028,900
Virginia	53,795	179,339	16,680	196,019	84,775	116,395	14,875	131,270
Other States	560	2,040	1,120	3,240	1,000	4,000	1,000	5,000
Total	699,100	$2,260,862	$467,498	$2,728,440	895,372	$2,695,580	$547,645	$3,243,225

With the exception of 1892, when the yield of roofing slates was 953,000 squares and the worth of other products $720,000 with a total value of $4,117,000, the slate production of the United States in 1897 was the largest in the history of the trade, though generally prices were unsatisfactory. The quiet prevailing in domestic building accounts for the smaller yield of Maine and Virginia, their products being too expensive to participate in the export traffic. For the same reason no progress of note was made in the opening of new districts in other States. The somewhat startling increase in the roofing-slate yield of Pennsylvania and Vermont is attributable to unprecedented exports, particularly in the latter part of the year. As foreign shipments are by weight it is impossible to give accurately the number of squares, but verified reports from the separate regions place the aggregate rather over 250,000 squares than under—a greater amount than dealers ordinarily credit. In the preceding table school slates are not included, the greater part of the value—$255,000—being labor and material entering into their manufacture.

The Pennsylvania and Maine slates are distinctively slate-blue to blue-black in color, generally of smooth uniform texture and the No. 1 grades are strong, durable, and handsome, holding a uniform color on the roof, which is a fundamental requirement. The Vermont and New York slates, on the other hand, are green, gray, purple, variegated and mottled in color. They are strong and durable, but, with the exception of the "sea-green," are somewhat limited in quantity. As roofing slates are rated in the market, the two extremes, the most costly and the cheapest, come from this region, which is partly in one State and partly in the other, and it is equally true that the cheapest are ranked among the most lasting and serviceable. Their low price is due to their not holding their color, or rather changing differently and unevenly to tints of many hues when exposed to the weather. For warehouses, or structures where service is desired rather than architectural or artistic effects, they come well into use.

The several districts which to-day supply the home and export markets, together with their more active quarries, factories, and products, are as follows:

Pennsylvania.—On the southeastern side of the Blue or Kittatinny Mountains, in Northampton County, Pa., is the foremost slate-yielding area of America. The region is seven or eight miles wide, and the Kittatinny or Great Valley extends from New Jersey to Georgia, with essentially the same geological structure throughout.

Bangor is the leading slate mart of Northampton County, and No. 1 Bangor slates are generally considered the standard in the United States. They are of superior quality, of firm dark blue color, of fine texture, and make a handsome and practically indestructible roof. They are used generally on government buildings. Undoubtedly they are not equal to the best Welsh slates, though some aver the opposite, but they certainly average better than ordinary Welsh grades. No. 1 Bangor "ribbon" is a kind from the same quarries with a streak or ribbon, which marks a line of original bedding, or stratification, crossing one end. When laid on the roof the ribbons are covered by the lap, thus presenting the same appearance as the standard Bangor slates, and, while cheaper, they are practically almost as serviceable.

The Bangor Roofing Slate Manufacturers' Association was formed in January, 1895, with twelve slate-making concerns, principally for the purpose of self-protection as concerns the quality and integrity of the Bangor roofing slates handled by the trade. It is not a pool to attempt to regulate the business affairs of its members, though a scale of prices is adopted which is well maintained and governs all sales. The purpose intended has been well served, and the quality of the slate shipped from Bangor has, in consequence, wonderfully improved in the last three years. With each carload shipment goes a certificate of the association, setting forth that the slates therein are the genuine Bangor slates and that they were properly inspected and are vouched for. As some who produce other and inferior slates have at times made use of a representation of this certificate, in February, 1898, the association had it regularly made a trade-mark, and hereafter will prosecute all infringements. Illustrative of the benefit the trade derives from the association's certificate is a recent happening (at East Orange, N. J.), where a roofer put on inferior slates when the architect's specifications called for genuine Bangor. The slates proving unsatisfactory, a demand was made on the roofer for the genuine Bangor certificate with car and number, and being unable to produce it he was forced to take them off and replace them with the kind named in the contract. As a record is kept of all certificates issued and the dates thereof, it is not a difficult matter to trace back any particular consignment. The Washington, working only a small force, is the sole operating Bangor concern not in the association.

The number of squares marketed by the association during the last three years is as follows:

	1895.	1896.	1897.
Domestic	102,700	136,700	139,600
Exports	2,870	8,330	50,820
Total	105,570	145,030	190,420

The value of the sales in 1897 amounted to $620,000. The increase in exports is peculiarly significant. Although definite figures for the first quarter of 1898 are not obtainable, it may be said they show a good percentage of increase over the corresponding months of last year. In this regard the claim is made that the genuine Bangor stand rough handling better than many roofing slates, a great advantage in foreign shipments. Mainly owing to the largely increased export demand, the stock on the banks at nearly every quarry is at present reduced to a minimum, which places the business on an excellent footing at the opening of the new season in April.

Around Bangor are several factories where all kinds and forms of structural material are made; as mantel stock, laundry tubs, urinal stalls, treads, risers, platforms, tiles, burial cases, covering for domes, and in short for all the numerous specialties for which slate is well fitted. Blackboards form an independent business. The structural uses for slate are steadily enlarging, and the manufacturers believe this is to be an important industry. So far the present year this branch of the trade is reported quiet, which was its status also during 1897. But few of these products are exported, and hence the structural slate business depends on the relative quiet or activity in domestic building. There are seven factories in the immediate neighborhood of Bangor, which employ from seven to thirty men each and are capable of making from 6000 to 25,000 ft. of finished product per month—measured as lumber on a basis of stock an inch thick; i.e., a 2-in. slab 1 ft. wide and 3 ft. long would be 6 ft.

Stock is furnished by the quarries in the rough, as broken in the pit, and paid for according to the amount of marketable material each piece makes. If worked to their full capacities these seven plants could turn out 100,000 sq. ft. per month, not including blackboards. Some claim more than is here credited them, but this total is believed to be ample with their present machinery. In 1897 not one averaged more than two-thirds its capacity, and some considerably less, though the total product is said to have been fully 10% more than in the preceding year.

Blackboard shops are generally operated independently. When finished the standard boards are about ⅜ in. in thickness and 3, 3½, and 4 ft. wide and any lengths desired. Of late the Bangor blackboard business has been of small account. At the Enterprise Slate Works, East Bangor, W. J. Jacobs has the only marbleizing plant in this section now in operation. It is a small affair. All told the value of the structural output, including blackboards, of this locality in 1897 was $98,000.

There are six concerns engaged in the making of school slates in Bangor and vicinity. Of these the Hyatt and the Weller factories are the most important. When working at full capacity they all employ over 600, many being girls. Every variety of school slate is made. The season of activity is the summer and fall.

Exclusive of the school-slate factories there are 1700 employed in and around the quarries and structural mills of this neighborhood.

Pen Argyl is three miles west and south from Bangor, and the quarries and half-worked or abandoned pits stretch in almost an unbroken line between the two towns. As commonly styled, "Albion" or "Jackson Bangor" are the slates produced, which are next in quality to the Bangor, and when made from deep-bed stock command ordinarily within less than 25c. per square of genuine Bangor prices. The beds nearer the surface make inferior slates which are irregular in color and brittle. There were 13 producers in this district in 1897.

Wind Gap, a mile distant from Pen Argyl, has four active quarries. The slates are almost of the same appearance and grade as those of Pen Argyl. The exception is the Grand Central Co., whose quarry has opened the genuine Bangor vein. This company is a member of the Bangor Roofing Slate Manufacturers' Association. A new quarry is just opened by the Royal Slate Co., which promises well.

In 1897 Pen Argyl and Wind Gap quarries produced 132,000 squares of roofing slate. As in other localities there is buoyancy over the rosy prospects for the coming season, attributable chiefly to inquiries for export. Stocks are lower than for several years and the demand is more brisk.

In the Pen Argyl section there are seven mills, none of them large affairs; in March (1898) they were employing 4 to 10 men each, though forces later will be increased. More blackboards are now produced than structural stock. For the past year the business in structural material and blackboards in this neighborhood was about $67,000. The Pen Argyl locality furnishes employment for 950 men in its slate quarries and factories.

Within 5 miles of the western limit of Northampton County is the village of Danielsville, a small unattached slate center, which is sometimes connected with the Pen Argyl region, though its business ties are with Slatington, and also their quarry products are more akin. It is 12 miles from Pen Argyl and less than 6 miles from Slatington. Early in January the Hower quarry, the principal one near Danielsville, was sold to an English syndicate for $200,000. When the improvements under way are completed it is expected that its roofing-slate output will be fully 3000 squares per month. Numerous beds are open of varying worth in color, texture, and strength. Many of the slates are as perfect and strong as the best Lehigh and of equal fixed dark color, while others are rough, brittle, and irregular in tint.

Near the Hower quarry is the property of the Danielsville Slate Co., which is worked by four sets of lessees, of whom the Black Diamond has a structural mill making about 8500 ft. per month of clear non-ribbon stock. There is a marbleizing shop in connection with it. At Walnutport, across the Lehigh River from Slatington, there are a few small quarries and mills, which properly belong to the Lehigh region.

Chapman Quarries and Belfast, 12 to 15 miles south and east of the Bangor-Pen Argyl-Danielsville belts, complete the slate-producing sections of Northampton County. The Chapman Slate Co. and the Keystone Slate Co. are the important operators at Chapman Quarries, where hard and strong ribbon stock prevails, and where a great deal of structural material was formerly made. In 1897 the roofing-slate yield was 23,700 squares. Belfast is the locality of hard-bed slate. It is not adapted for roofing, but makes good flags for sidewalks; also for steps and flooring. Of late but little has been done.

Around Slatington, including Slatedale and Walnutport, which make up the Lehigh district, there are a larger number of quarries than in any part of

Pennsylvania. Most are small compared with those of Bangor, but in the aggregate they give employment to as many persons. Slatington is the business point. A greater variety of slate—excellent and trash, firm color and fading, soft to medium hard—is produced than elsewhere. There are no ribbons and the main beds are from 12 to over 30 ft. between splits, or joints, affording clear and choice workable stock of large dimensions. The Franklin and Washington big veins, or beds, yield the best roofing slates, which are strong and retain a uniform color on the roof. In each pit there are one or two large beds, separated by several smaller ones, with small beds on either side, and generally the former make desirable products, while the small beds yield inferior ones. As the largest portion of the material handled in working the quarries is small-bed stuff, the temptation is strong to turn some of this to account by making it into roofing slates. Small beds are almost invariably soft, changeable in color, and break easily soon after exposure. They are only fit for school slates. For this reason different manufacturers of Lehigh roofing slates now furnish certificates to the effect that they are from the big beds and are warranted strong, of fast color and durable. This was made necessary as certain producers mixed small-bed thirds, fourths, and fifths with good slates, selling all as standard Lehigh. Numerous exports of these inferior slates, or trash, at one time threatened to destroy this trade utterly. To-day, generally speaking, greater care is exercised in inspecting foreign shipments than domestic, rejecting all not of the best, and as a result, with other businesslike efforts now in vogue, exports are steadily increasing. The best school slates, blackboard stock, and clear, uniform structural material come from this section.

The shipments of roofing slates, in squares, from the Lehigh region in 1897, with the corresponding figures for 1896 in parenthesis, were as follows: Domestic, 119,640 (126,061); export, 64,290 (45,789); total, 183,930 (171,850).

The greater part of the blackboards used in the United States are made in Slatington and vicinity. Last year there were eleven factories operating, including the Hower at Danielsville, which ships from this point. Each made from 45,000 to 153,000 sq. ft., or in all 930,500 ft., which at 10c. would be $93,050. The factories buy stock delivered from the quarries at 7c. per foot for inch material, and each foot makes two feet of blackboards, the latter being ⅜ in. thick. With the exception of the Consolidated Lehigh and Slatington companies little attention is paid to structural material, though several other mills do more or less, but this is destined to be a more important factor of the Lehigh slate trade, as clear stock is coming into better demand. For 1897 the production was 325,000 ft.

For school slates this region supplies the best material, which should be soft, smooth, and of even grain, the greater portion used in the Northampton County factories coming from here. It is probable the time is not far distant when most of the school-slate factories will be near the quarries supplying the raw material, but of the ten operating last year eight are in Northampton County and two in Lehigh County. The factory of Edwin L. Kraus at Slatington is the most complete. It averages 15,000 slates per day, and next to the Hyatt, at Bangor, is the largest in the country. David Williams' Sons, also at Slatington, make about 2,000,000 per year; their product is handled by the Hyatt School Slate Co., excepting exports. A promising trade is being built up in England, Denmark, and Germany. In quality, finish, and price American school slates are superior to the foreign, but evidence of a strong prejudice against them is not wanting, simply because they are American. Ordinarily, in summing up the different slate products, school slates are overlooked, though they form a considerable item, the business in 1897 amounting to $255,000. The production last year was 10% greater than in 1896, but prices were lower. Prior to 1897 there was a school-slate pool.

The Peach Bottom region lies in Lancaster and York counties, Pa., and Harford County, Md., and is about eight miles long, with a workable width of half a mile. Recently only six quarries have been worked, two being in Maryland, and the production has been comparatively small. These roofing slates are very tough and strong, but do not split readily into thin, smooth layers. In point of long service and for retaining their color they rank at the top. In 1897 the production was 28,170 squares.

Vermont and New York.—In the trade generally, all slates which are not from Pennsylvania are known as Vermont slates, though a few quarries are in New York. The Vermont region, so called, extends for 40 miles in a general north and south direction, and is proven four miles east and west, along the boundary of Rutland County, Vt., and Washington County, N. Y., or from about Castleton, Vt., to Salem, N. Y. The half dozen red-slate quarries are in New York, near Middle Granville. The striking, characteristic feature of the Vermont belt is the diversity of colors in the slate rock, at times the same quarry affording distinct beds of chocolate, purple, green, and mottled.

Granville, N. Y., and Fair Haven, Vt., the former in the heart of the "Sea-green" and the latter of the "Unfading Green" quarries, are the prominent business centers. These are the two leading kinds of roofing slate produced in the region, the red, purple, variegated, and others being of slight importance. There is a constant demand for the unfading green and red slates for export, but the capacity of the beds is limited. From the sea-green quarries there are no products made other than roofing slates, and the factories for structural material are all in the northern part of the slate area, near Fair Haven, though the Penrhyn factory, one of the largest, is at Middle Granville.

In Vermont it is said the sea-green is the favorite slate for roof covering, and in a degree this is true. More are made than of any other kind in the United States, and their low price brings them within the reach of many who cannot afford the more expensive kinds. Perhaps the name "sea-green" was selected with intent to deceive, since the ocean has many hues, nor is its color always alike at the same place; so it is with these slates. One manufacturer playfully remarks: "I give an affidavit with every shipment, warranting my slates to alter to many hues, and that they are everlasting in wear, not in color"—which states the case quite accurately. A pool operating under the name of the Vermont Slate Co. controls the greater portion of the "sea-green" business, filling all orders. At the opening of the current year the trust was threatened with dissolution, as has happened more than once, but recently, as the prospects became brighter, the members have pulled more closely together and it is said the Vermont Slate Co. shows greater stability than ever. It has 25 members, though every month or two there are changes among the smaller concerns, some dropping out and others taking their place.

In 1897 there were 183,030 squares of roofing slate sold through the Vermont Slate Co., and on January 1, 1898, there were about 90,000 squares on the banks of the quarries, or 11,000 more than on the January previous. Up to the last of March, 1898, the outlook was discouraging for the new season, when word was received from a member of the pool in England that he had succeeded in placing large orders, sufficient to clean up the surplus stock of the sizes used abroad, and that probably these export orders will continue. It is said these slates are now sold there for what they are; i.e., strong and serviceable, but not of fixed color.

The Edwards Slate Co. manufactures sea-green slates, but is not in the pool. An active rivalry has existed between them, and for a time war to the knife was waged, but a truce is declared, and it is affirmed that no more frictions are to occur. The Edwards Co. handles slates made by several small quarries, which it neither operates nor controls. All told it is claimed a 10% larger business was done last year than in 1896.

During 1897, in and out of the pool, there were 248,740 squares of "sea-green" roofing slate marketed, of which 39,710 squares were exported. These quarries are all in or near Poultney, Wells, and Pawlet, Vt. At the latter place the modern plant of Auld & Conger includes a wire transmission device, a mile and three quarters long from quarries to railroad, by which a car can be loaded with roofing slates in half an hour.

Last year production of unfading-green roofing slates was curtailed by the largest active quarries not opening favorable beds, or by the beds pinching out. Recently a change for the better has taken place, and already it is reported the output is increasing. Several of these quarries also afford purple and a few mottled and chocolate slates as well. It is said tenfold the best output of unfading green ever made, if it were steadily maintained, could easily be marketed in Europe and Australia.

The Eagle Red Slate Quarry supplies a superior roofing product that is widely known for its excellence. The American Red Slate Co. is the name of a syndicate operating the five other red quarries now worked—the Eagle not being in the pool. The 1897 production in and out of the pool was small, not exceeding 7000 squares of prime slates.

Outside of the sea-green, or including unfading green, red, purple, mottled, etc., there were produced in Vermont and New York, in 1897, 36,300 squares of roofing slates.

For 1897 the factories which make structural slate generally report a quiet business, particularly in the marbleizing branch. Not to fancy marbleized work appears to be a fad, some say because it has become so ridiculously cheap in price. The factories of this region did not work over half time through the year. Blackboards and school slates are not made in Vermont owing to the light colors of the slate, which for these purposes are surpassed by the dark Pennsylvania slates. In a measure the former are replaced by billiard-table beds, of which a considerable number were made. This mill stock is turned into mantels and other household decorative material, steps, platforms, trimmings, laundry tubs, chemical vats, and a long catalogue of specialties for which slate is peculiarly fitted. The Penrhyn Co. has made a beginning in exporting billiard-table beds, electric switchboards, chemical vats, etc. About two years ago the Evergreen factory, the largest and best equipped in this region, was destroyed by fire, and owing to the quietness prevailing in the structural trade it was not rebuilt. There are 10 factories now operating, of which four have complete marbleizing and finishing shops. At Fair Haven are three small plants, working three to six men each, where all sorts of devices for electric purposes are made. These include switchboards, small and large, and small pieces of polished slate in different shapes and sizes. The Penrhyn and other factories also do this electric work. In 1897 the manufacture of structural slate in this region amounted to 927,400 sq. ft., of a value of $165,870.

At Truthville, in Granville township, is the only mill in this region which grinds slate for pigment. During 1897 it did not run regularly, and closed in October to start again some time in the spring of 1898. There is an ample water power, but otherwise the mill is unfortunately situated, being five miles or more from the quarries and the ground product has to be hauled nearly six miles to the railroad. An earlier attempt to grind slate for pigment was made at Middle Granville about 10 years ago, but the undertaking never paid. At Easton, Northampton County, Pa., is a mill where slate is ground, the powdered product being used for plastic-slate roofing, for pigment, in paper making, and other purposes.

PROPERTIES OF SLATE.

Qualities which give clay slate its chief value, outside of its remarkable fissile, or splitting, characteristic, are density and tenacity—hence the power thin plates have of sustaining great weights—lack of porosity, it being the most non-absorbent of the lithologic series, and low degree of corrodibility. The valuable chemical constituents are the silicates of alumina and iron, while the injurious constituents are sulphur and the carbonates of lime and magnesia. The color of the deposit of any particular bed is attributable to the chemical forms in which the iron and magnesia occur. Professor Mansfield Merriman, of Lehigh University, has experimented on the strength and weathering qualities of roofing slates.*

It would seem that tests for density and softness, although of importance for slates of the same locality, are not good indications of the strength and weathering qualities for those of different regions; that the tests for porosity, corrodibility, and flexural strength give good indications of these properties; that the results found for strength and corrodibility when mentally combined give on the whole an excellent idea of the value of the slate. In the Bangor region it appears that softness, strength, and toughness are qualities closely connected.

With respect to the relative value of physical tests and chemical analyses it would appear that, while the latter are important, the former can alone be regarded as giving authoritative information as to the wear of slate under actual conditions. The strength and weathering qualities of slate or stone depend not merely upon its chemical constituents, but on the manner in which the grains are cemented together. For the determination of this, a microscopic inspection is necessary, and in default of this the physical tests seem to carry far greater weight than the chemical analyses. Tests for abrasion and specific gravity

---

* *Proceedings of the American Society of Civil Engineers*, Vols. XXVII. and XXXII.

appear least of all in practical value, as relates to strength and wearing qualities. A common way of testing roofing slates is to balance one on the finger and tap with a light hammer or piece of steel; the best emit a clear ringing sound. Strength is strikingly shown by two heavy men standing on a single slate supported only at the ends.

RESULTS OF PHYSICAL TESTS OF ROOFING SLATES.

Variety of Roofing Slate.	Strength.	Toughness.	Density.	Softness.	Porosity.	Corrodibility.
	Modulus of Rupture in Pounds per Square Foot.	Ultimate Deflection in Inches on Supports 22 in. apart.	Specific Gravity.	Grains Abraded on 50 Turns of a small Grindstone.	Per Cent. of Water Absorbed in 24 Hours.	Per Cent. of Weight Lost in 63 Hours in Acid Solution.
Bangor	9,810	0.312	2.78	128	0.145	0.446
Albion	7,150	0.270	2.775	80	0.238	0.547
Peach Bottom	11,260	0.293	2.894	90	0.224	0.226

For each kind in the foregoing table a dozen specimens were taken, and the mean result is indicated for each variety of slate. For the corrodibility test a solution of 98 parts water, 1 part of hydrochloric acid, and, 1 part of sulphuric acid was prepared in which pieces of slate, first carefully dried and weighed, were immersed, and after the allotted time were taken out, redried, and weighed again. In reality no smoke or sulphurous fumes of manufactories would produce conditions anywhere near so severe.

The Bangor and Albion represent the Silurian, and the Peach Bottom the Cambrian dark-colored slates of Pennsylvania, and perhaps afford the best comparison possible of the average physical properties and chemical composition of the slates of each geological era. The slates of the Cambrian formation are usually regarded as better in respect to strength and weathering qualities than those of the Silurian. The Bangor and Albion specimens take a high rank among the Silurian kinds, while those of the Peach Bottom may be regarded as a good representation of the dark blue Cambrian varieties. All clay-slate deposits mined for industrial uses are either of the Silurian or Cambrian age. Those of Maine, Vermont, and New York belong to the latter.

Complete analyses of the Bangor and Albion specimens was not attempted, but such constituents were determined as would afford indications of the valuable qualities and of the injurious ingredients. The following is the result of the analyses made by Dr. Frederick Fox, of Lehigh University:

	SiO_2.	$Fe_2O_3 + Al_2O_3$.	CO_2.*	MgO.	CaO.	S.	$Na_2O.K_2O$.†
	Per Cent.	Per Cent.	Per Cent.	Per Cent.	Per Cent.	Per Cent.	Per Cent.
Albion‡	55.18	25 57	8.86	2.10	4.09	0.700	4.00
Bangor‡	56.97	26.05	7.14	2.69	4.38	0.462	2.31

* And organic matter. † By difference. ‡ Manganese is present in all the slates.

The chemical composition of the Peach Bottom slates is shown by the following analyses, one made by the Geological Survey of Pennsylvania, and the other by Booth, Garrett & Blair, of Philadelphia:

Geological Survey.—Si_2O, 55.880%; Al_2O_3, 21.849%; FeO, 9.034%; H_2O, 3.385%; K_2O and Na_2O, 4.100%; C, 1.974%; MgO, 1.495%; CaO, 0.155%;

SO_3, 0.022%; TiO_2, 1.270%; MnO, 0.586%; FeS_2, 0.051%; CoO, trace; total, 99.801%.

Booth, Garrett & Blair.—SiO_2, 58.370%; Al_2O_3, 21.985%; FeO, 10.661%; H_2O, 4.030%; K_2O,Na_2O, 1.933%; C, 0.930%; MgO, 1.203%; CaO, 0.300%; S, 0.107%; TiO_2, traces; MnO, traces; CO_2, 0.390%; total, 99.909%.

The following partial analyses of different slates were made by Mr. E. H. S. Bailey, of Lehigh University:

	Index of Porosity.	Sulphur. Per Cent.	Carbonic Acid. Per Cent.	Carbonate of Lime. Per Cent.	Specific Gravity.
Chapman's, Pa	0.14	.88	3.40	7.73	2.79
Chapman's Mixed	0.11	.98	2.83	6.43	2.79
Red Vermont	0.21	.075	5 42	12.32	2.81
Hower Quarry	0.14	1.29	2.72	6.18	2.78
Belfast Quarry	0.25	1.52	2.82	6.41	2.80

In "Chapman's Mixed," a sample made up of specimens from different parts of the quarry, so as to represent the whole fairly, was taken. The large amount of carbonate of lime given for the red Vermont slates is noteworthy, in view of their well-known capacity to resist weathering, and is but another illustration of how little a chemical analysis really tells regarding the physical qualities of slate. The best test of all, to compare several kinds of slate, is to put them on a roof in a manufacturing town and then examine them every five years until a satisfactory conclusion is reached. Of course this is impracticable, and while all such tests and experiments have a certain scientific value and are of worth to the specialists, the truth remains that all our standard slates are practically indestructible—at least they outlast the buildings they cover and ordinarily require no repairs or attention.

The phenomenon of slate cleavage is in no way dependent on the original bedding. It seems indisputable that this fissile property is the result of pressure—to compressive and shearing forces incident to the formation of mountain chains—by which the sediment has been compressed to about one-half its original bulk and the particles turned with their flattest sides toward each other. When a thin disk of slate is examined under the microscope this rearrangement and elongation of the particles is plainly shown. In other words, the cleavage planes are at right angles to the direction of the compressive forces which rearranged the constituent particles, irrespective of the stratification. It so happens that the Peach Bottom slates do cleave very nearly parallel to the bedding, as is true of some New York beds, but on the other hand the cleavage of the slates of Northampton and Lehigh counties, Pa., is widely different. At times in the same quarry the direction of cleavage relative to the bedding changes to all conceivable angles.

SLATE MINING AND MANUFACTURE.

That cleavage and bedding are independent of each other plays a most important part in mining slate blocks. When the term vein is used, in accordance with popular custom, it means, or should mean, that portion of the rock in which the cleavage is most perfect and workable, though frequently it means something different. The joints, or splits, which separate the vein are normal to the stratification. In mining the blocks the quarrymen aim to get them out up to the split. Bands, or ribbons, a fraction of an inch to an inch and more wide, of darker or lighter color than the main body of the slate, mark lines of bedding.

Usually the slate deposits are covered with earth and gravel 10 to 40 ft. deep, and the first step in prospecting for a slate quarry, after noting the surface indications, is to strip off the top and the weathered outcrop of the rock. If all continues favorable a horse derrick is brought into service soon after compact rock makes its appearance. As depth is gained the horse is replaced by a hoisting engine, and later, should a profit-paying vein be opened,—for a good slate quarry is nearly as hard to find as a good gold mine,—an inclined cableway is installed. The cableway is both a hoisting and conveying device, the carriage riding on a suspended overhead cable as a trackway. Its introduction in open-pit mining, about 10 years ago, is the foremost economic improvement in modern slate making. Some quarries have three to eight cableways, each operated by a separate engine, which are ordinarily spoken of as hoists or derricks.

In quarrying slate, holes are drilled at right angles to the cleavage planes so as to loosen large blocks. Black powder is used, as the force desired is a dull heaving one which will displace the rock without unnecessarily shattering it. The holes are placed in such positions and the blasts so adjusted that the blocks are hardly more than freed from the bed and never moved but a trifle. These large blocks are divided into smaller blocks, a foot or more thick, two or more feet wide, and 6 to 12 ft. long, which are hoisted out of the quarry, loaded on cars, and trammed to the shanties where the slates are made. Each block is marked as one of four grades before it is loaded on the cableway; viz., three or four straight marks indicates a No. 1 block; "L" is a "lookat," for the blocker on top to decide its merits; "B" means that it is from the big bed, or free from ribbons; "H," that it is a "hollabobber," or practically worthless. The discarded "lookats" and "hollabobbers" are sometimes worked over by rubblers, who make such slates as they can from material that is destined for the rubbish dump.

One is amazed at the amount of waste rock in slate mining and the rapidity with which the rubbish mounts into large piles. In fact the disposing of the waste is one of the most serious difficulties contended with, and a large and ample dump is as necessary as in hydraulic gold mining. Not infrequently it occurs that a mountain of rubbish is stacked on ground that proves to carry strong beds of good slate, and it becomes a perplexing question whether to move the rubbish or abandon the ground. It is said that $\frac{1}{8}$ to $\frac{1}{20}$ is about the proportion of finished products to the total rock removed, though some quarries do better. In Wales, where the stock is worked more closely than in the United States, for they make everything at all workable into some sort of marketable product, this proportion is rarely above $\frac{1}{8}$, and in one of the best paying quarries only $3\frac{1}{2}$ tons of marketable slate is made of every 100 tons broken.

Power drills and channeling machines are used where they are found to be of advantage. When the angle of cleavage is not too steep, as in the large Bangor quarries, the channelers often come well into service. Frequently they reduce the percentage of waste very materially and enable the getting out of a huge block, which affords slabs of the largest dimensions required for structural purposes, more readily than could otherwise be done.

The blocks having been delivered to the shanties where the finished roofing slates are made, the next operation is the making ready of the small blocks, or slabs, for the splitters, which is done just outside the shanties sometimes by one man and at others by two working together. First the blocker, the head one if there are two, who is the foreman of the shanty crew, determines how each large block will divide with the smallest possible waste, avoiding flaws, ribbons, bends, knives, spar seams, etc., sometimes by bringing them to the ends of the slate that they may be cut off in the dressing. If the block is wide it is split lengthwise, to suit two slates of the same or different widths. This is done by making a notch at one end with a chisel at the point desired to start the lateral split, and, aided by the grain cleavage, a block 6 to 8 ft. long will ordinarily be divided in two by dexterously turning the split from this end. At times it is necessary to make a hole, somewhere midway on the line of split, in which two iron wedges are inserted and a third driven between them before the division is perfected. These reduced blocks are split into thinner blocks, or slabs, about 2 in. thick, and these again are broken across into such lengths as the stock will best make up. The transverse division is made by cutting a notch on one side at the point where the break is desired, turning the slab so that this notch is down, and then striking the opposite side a sharp blow with a heavy wooden mallet, when the break occurs between the notch and the point struck by the mallet. These reduced blocks, or slabs, are ready for the splitters. It is generally necessary to keep the ends of the blocks moist, as most slate will not split readily when dry, and the blocker uses a swab freely for the purpose. A helper piles the 2-in. slabs in the shanty near the splitter, who is seated but a little above the ground, with the blocks at his left side. Placing a block against his left thigh, with the straightest and smoothest end up, he divides it in halves by a long thin chisel 2 to 3 in. on the end, called a splitter. In doing this he makes two or three cuts along the center line, using a wooden mallet, the blow from wood being better adapted for slate making than one from steel. The middle one is sent further into the slab, which begins to divide, when a second splitter is inserted and moved backwards and forwards, extending the split down till the division is complete. The process is repeated, dividing each piece into halves, till they are reduced to the required thinness—usually five to seven to the inch. Each time greater care is required, and when the material is fractious tact and judgment are needed to humor the split, so as not to destroy good material. Finally the splitter roughly shapes each piece, cutting out flaws, etc., to about the size slate it will make, when it is ready for the last trimming. A boy takes these embryo slates and piles them up near the dresser. Cleavage is greatly aided by buttering or greasing the splitters.

The dresser works by a window in the shanty, standing in front of the trimming machine, which has gauges at one side for the different sizes of slate. In Northampton County, Pa., the squaring is done by a treadle contrivance bringing down the knife attached to a sapling, one end of which is made fast in a horizontal position overhead. A better-appearing, patented, trimmer is used in Vermont and elsewhere in which the knife is part of the machine, which is also worked by a foot treadle. In splitting and dressing roofing slates care is taken that the grain is parallel to the long way of the rectangle. Slate grain, though never so well marked as that of timber, has a like influence upon the strength in different directions; slate, for example, being more liable to crack lengthwise than transversely. The dresser knows at a glance, as he picks up each piece, what size slate it will make, and with rapid, deft handling and four strokes of the knife a finished slate is complete. On a shelf in front, or rather to the right, each is put with the others of the same size. Roofing slates range in size from 24x14 in. to 12x6 in.

Two splitters and one dresser commonly work in a shanty, though some slates split so easily that one splitter is sufficient. Bangor quarrymen say the reason they do not use the more modern trimming machine is that its motion breaks the slates. In Wales circular saws are used to shape the blocks into sizes before they are split. The slate saw has been introduced by the Eureka Co., Fair Haven, Vt., but others affirm it is more costly than the method in vogue.

At Bangor and Pen Argyl all work is generally done by contract, on the "in and out" system; i.e., the men "in" the quarry, who mine and get out the blocks, are in partnership with the men "out" on the banks, who divide up the large blocks and convert the stock into slates. They work in crews of six or eight men, two in the quarry and the others on the surface, and are paid so much per square for the slates made. The company exercises a general superintendence, hoists the blocks from the quarry, delivers them to the shanties, and removes the waste; the contractors supply their own tools and divide the work among themselves as they see fit. In some instances powder is furnished by the company, and when channeling machines are used these are operated by the company. Sometimes two separate contracts are made, one "in" and the other "out," or the rock is mined under one contract and the slates are made under another. In this region the cost is about $2.50 per square of slate, which includes the company's outlay for engineers, firemen, trammers, helpers, boys, etc.

In Vermont, New York, and Lehigh County, Pa., there are no contracts, and all men are paid by the hour, working ordinarily nine hours a day in winter and ten hours in summer. Wages in Vermont and New York range from 12c. to 22c. per hour, the average for the quarrymen being 18c.; in Lehigh County they are about the same or a little lower. The belief seems to prevail in Vermont that there is greater waste by contracting, and in other ways it is less satisfactory from their viewpoint. At the "sea-green" quarries they count on making a square a day per man employed, while in the unfading green and red it runs three to four squares to every five to eight men. In the Vermont region practically all the slate-makers and most of the pitmen are Welsh; in and around Bangor there are fewer Welsh and some Italians, and in the Lehigh region the Pennsylvania Dutch are easily in the majority. The last, around Slatington, demonstrate that it is not essential to be a Welshman to understand the quirks and curls of slate from top to bottom. Probably the largest output per shanty is that of the Hazel Dell quarry, near Slatington, where 14 squares are commonly made in a day. Around Bangor less than half this number is considered a good average, and the same is true elsewhere.

Nothing is met in every-day life which stains or mars slate. It is so pure and clean, so fine-grained, compact, and strong, and can so readily be shaped into dimensions of any size or thickness, that its utility for structural purposes was early recognized and turned to account. For sanitary requisites it is unsurpassed. Dirt abhors slate, and it is such a poor absorbent that it makes the best cisterns for water or oil, vats for acid, kitchen sinks or laundry tubs, and no utensils or trimmings about the house are more easily kept clean.

Usually the factories are close to the quarries, connected by tramways, over which pass cars loaded with the stock to be worked up. Owing to the fissile property and softness of slate a large slab from one to two or more inches thick can be turned off in a twinkling just by a few blows on a chisel. The sides are cut true by a circular saw with large teeth, in front of which passes a horizontal bed carrying the slab, and the faces are smoothed by a planer, a machine which shaves off $\frac{1}{4}$ to $\frac{1}{8}$ in., when necessary, each time it passes over the surface. Next the slab is smoothed on a rubbing bed, a revolving iron disk 12 to 16 ft. in diameter on which the slab is held fast. The final polish is hand work with grit and pumice, ending with a soft rub, very much as marble is finished, only slate requires far less time. The most recent improvement in machinery is an overhead-trolley arrangement, which greatly reduces the cost of handling the stock. Blackboards are made in about the same way as the slabs, though finished with greater care. In some factories they are hand shaved, in lieu of being placed in the rubbing bed, which does not afford such a uniform finish.

Enameling, or marbleizing, whereby plates of slate are made to resemble marble, malachite, granite, or wood, is generally done in a separate finishing shop, an annex to the ordinary factory. The process consists of placing the plate in a tank of water with the face to be enameled on top and just below the surface, when the artist proceeds to float the design, blending the colors on the water above the plate. The imitation of marble, or whatever it may be, is transferred to the slab and allowed to dry, after which it goes to the baking room, where it is kept overnight at a temperature of 140° F., and the process is repeated as often as the design requires. In the end there is a polish of rotten-stone, pumice, and hand rubbing. The finished article frequently is such a perfect imitation that good judges of marble can hardly believe that it is only baked paint on slate. A great variety of ornamental work and useful articles are made. For some reason marbleizing is less in favor than a few years ago, yet it has undoubted merit and the fashion may return.

All the slate quarries in the United States are open pits, and they are of all shapes, depths, and dimensions, dependent on the exploration accomplished and the depth of the beds. The Old Bangor covers the largest area, and the cleavage planes being nearly horizontal permits the working in steps or benches most favorably. It is 175 ft. deep and is 10 acres in area. About Slatington the beds twist and roll like an S, and at times, in following the paying big beds at the bottom of the quarries, they take headers out of sight, rolling under one side. The deepest pits in the Lehigh region are something over 200 ft. Where the cleavage planes are vertical or nearly so, the quarries are of smaller area than those like the Old Bangor. Good clear, workable slate veins resemble ore shoots in metalliferous fisures, by coming in and pinching out in most alluring and tantalizing ways; hence there are abandoned quarries which have not half the material removed as in others profitably working on the same beds near by and at times adjoining. Huge piles of slate rubbish, a collection of derricks, cableways, wire ropes, tramways, and the small shanties where the slates are made are always in evidence.

Quarrying is often interrupted by the inflow of water after rain, and many quarries have a pump working most of the time. As all the work is open and exposed, hours and days are constantly being lost by stormy weather. In the summer at midday the pits are insufferably hot, and for several months the men take two hours' nooning, or longer. About Slatington the Pennsylvania Dutch have introduced the custom of going to work at 6 A.M. or earlier, taking a lunch at nine o'clock, dinner at noon, occupying an hour or more, and stop for the day when the ten hours' work is complete.

But few quarries in the United States are owned by those who operate them, probably not to exceed a dozen in all, while a great many quarry operators are men of small or no means. Perhaps this is the most serious drawback to slate mining. The ordinary custom is to lease virgin ground, generally after the owners have stripped the top down to the country rock, or a pit which has been previously worked, on a royalty of 25c. to 50c. per square of roofing slate sold. In the Lehigh region the royalty generally is 10% of the selling price f. o. b. quarry. Until about six months ago the nominal royalty in Vermont was 50c. per square, but to-day in most cases the actual bonus paid is 25c. Two men, or several as partners, with practically no means, having everything to gain and nothing to lose, lease a pit, get what they need on credit, and start to make roofing slate, piling up the over-production as has been the case in recent years. The inevitable result of demoralization follows, with slashing of prices by the impecunious concerns, and the next step is the making of trash and selling the same at bargains for fair to standard grade. It is alleged that this phase of slate manufacture is the one stumbling-block which has deterred capital from embarking in it. If the quarries were controlled by business men of means, it is believed that it would not be long before slate would become a staple commodity, with prices maintained where there is a fair profit. Many well informed in the premises aver that soon there would be more used, as there would be a more united, systematic, and persistent method pursued for widening and improving the domestic market, which is far from being done under the existing order of things. However, conditions to-day are far less deplorable than two years ago, when the exports were but a small factor in reducing the rapidly accumulating surplus.

In Wales roofing slates are made at a much smaller cost than in this country, and even the inferior grades, which in quality and finish do not compare with the average produced here, bring a higher price. There the trade is in strong hands, and all appreciate that slate is the best and most durable material for the purposes for which it is adapted, and that a slate roof, once properly in place, rarely needs more repairs than the front of a stone structure. Abroad, when new buildings are erected the question of repairs for 5, 10, 20, or for 50 years ahead is always weighed and fully considered; to which is attributable the use of slate often in places where its first cost is greater than other substances. In time the same considerations will have equal weight in this country.

EXPORT TRADE.

American roofing slates were first marketed in England in the "seventies," the most considerable exports being between 1876 and 1879. During that period, while our slates were going abroad, Welsh slates were being imported into the

United States, and, curiously enough, for several years the volume of exports and imports were about equal. Prior to 1880, in no single year did the exports exceed 20,000 tons, and after 1881 both exports and imports gradually fell away, each country apparently depending on the home supply. In this regard there appears to have been no special change till 1895, when the strike at the famous Welsh quarries of Lord Penrhyn cut off the British supply to a degree that soon it became evident that other slates would have to take their place. Thus it was that a new impetus was given to a branch of the trade which had been dormant for more than a decade. The Penrhyn strike continued till November, 1897, and meanwhile an opportunity had been afforded to establish permanent channels of trade with England, Ireland, Germany, and Denmark, which was well taken advantage of. Early in 1896 American consuls at foreign ports were called upon to furnish names of American slate manufacturers and dealers, which speedily led to negotiations, and soon thereafter agents were sent abroad to secure orders. A little later, more particularly during the summer and fall of 1897, foreign dealers became sufficiently interested to cross the ocean and visit our quarries, and in this way several large contracts were entered into. On the whole American slates have given good satisfaction abroad, though for a time some dealers exported second and third grades, representing them as standard products, which threatened to ruin the traffic. Sufficient standards had been and were being shipped, fortunately, to aid in overcoming this short-sighted practice. The troubles at the Welsh quarries not only afforded the opportunity for the American slate dealers to build up a new market and establish it on a firm foundation, but to-day many foreign dealers prefer American slates, at their price, to the Welsh—another evidence that the business has come to stay. For each year since the beginning of the revival in roofing-slate exports the tonnage and value are as follows: 1895, 2275 ($40,952); 1896, 18,145 ($326,573); 1897, 55,120 ($983,471).

All foreign consignments, with but an occasional exception, are sent c. i. f. at the shipping port, and thereafter the shipper has no risk or worry. Of the totals fully two-thirds were from Pennsylvania and the remainder from Vermont. Prior to 1898, the greater proportion of these exports were shipped from New York, probably more than from all other ports combined, but it is doubtful if this is longer true, as Newport News, Baltimore, and Philadelphia are receiving increased consignments. Recently several new dealers have embarked in the slate-export trade, some of whom plan soon to ship entire cargoes of slate in their own or chartered bottoms, and one firm, the American Slate Mart and Wharf Co., Limited, has secured a convenient wharf just out of London, where a considerable stock of all the large sizes of the standard American slates will be constantly on hand. Heretofore foreign dealers have purchased sparingly, limiting their orders to accommodate the temporary needs of their customers, but the traffic appears to be getting on an entirely different footing, the aim of numerous dealers being to carry an ample supply.

Some dealers in England and Germany are timorous about advertising the fact of their handling American slates, many of which are resold as Welsh and are said to average better than the grades they are supposed to be. Frequently American slates are reshipped from England and Germany to Australia and South America.

In England and on the Continent roofing slates are sold by the "mille," called a thousand, which consists of 1200 pieces, and in all export shipments 5% is added for breakage, so practically in the United States the foreign "thousand" means 1260 slates, irrespective of size. Only the larger sizes are ordinarily sent abroad —Germany desires a special extra size, 24x16 in.—and the following table gives the number of slates per square, as commonly laid on the roof with a 3-in. lap, the equivalent in squares per "mille" of 1260, and the British trade name, for each of the sizes usually exported:

Size in Inches.	Number in a Square.	Number of Squares in a Mille.	British Trade Name.
24x14	98	12.86	Princesses.
24x12	115	11.03	Duchesses.
22x12	126	9.97	Small Duchesses.
22x11	137	9.15	Marchionesses.
20x12	141	8.93	Small Marchionesses.
20x10	170	7.48	Countesses.
18x10	192	6.50	Wide Countesses.
18x 9	213	5.91	Viscountesses.
16x10	222	5.67	Ladies.

A princess—24x14 in.—mille of American slates weighs on the average about 3½ tons, and a ladies—16x10 in.—mille a little under 2 tons. Ordinarily no sizes smaller than countesses are exported, and by far the largest orders include only princesses and duchesses.

In the 1895 exports and in less degree for those of the following year the breakage was frequently excessive, sometimes, it is said, reaching 12 to 14%. This was partly due to rough handling by stevedores in loading, who knew nothing of stacking slates, but as often to poor quality of the product. During the last 12 months greater care is being exercised both in loading and in the inspection of shipments at the quarries, and when a shipment is made up of lots from several quarries each is kept separate in loading from the wharf, and they are not allowed to become mixed when unloaded at the port of destination or when finally sold to go on the roof. Exports are always for cash or bankable paper, while domestic sales often run six months and frequently are finally settled at a discount. As generally the quarries have no commissions to pay for export orders, though nominally prices are lower than for the domestic trade, to-day the manufacturers do better in catering to the former market. Competition in exports is benefiting the quarrymen in other ways, more especially in the making of contracts for future delivery—in some instances for two and three years ahead, for a specified number of squares per month. Other quarries have their entire production contracted for this year and next, while options are being considered for 1900.

It was reported in December, 1897, that the Welsh quarries were falling behind in production, where a heavy output was confidently anticipated, and later this report was denied. Several who have recently returned from England—in March and April, 1898—reaffirm that this report was not altogether a groundless rumor, for, whatever the cause, fewer slates are now made than formerly, in spite of the very active demand. Be that as it may, the American production can readily be enlarged to double the present yield, which can be maintained for a long period. Before the importance of the growing export trade was appreciated there was little incentive for new exploration work; to-day the top is being stripped from more virgin ground than at any time for five years.

SODA.

SODA exists in nature in large deposits as carbonate and sulphate. As carbonate it occurs as the mineral natron, and is represented by the formula $Na_2CO_3 + 10 H_2O$, in which carbon dioxide constitutes 15.4%, soda 21.7%, and water 62.9%; also as the mineral thermonatrite, represented by the formula $Na_2CO_3 + H_2O$, in which carbon dioxide is 35.5%, soda 50%, and water 14.5%; and the mineral trona ($3 Na_2O, 4 Co_3O, 5 H_2O$), in which carbon dioxide is 38.9%; soda 41.2%, and water 19.9%. The last is perhaps the most common. It is found in the province of Fezzan, Africa, at Lagunilla in Venezuela, in Wyoming, in Churchill County, Nevada, and at various places in California.

Trona is easily identified. In the closed tube it yields water and carbon dioxide. Before the blowpipe it imparts an intense yellow color to the flame. It is soluble in water and effervesces with acids. With moistened litmus paper it gives an alkaline reaction.

Sodium sulphate is more common in nature than sodium carbonate. It occurs as the mineral thenardite, a simple anhydrous sulphate, and as apththitalite, a double anyhdrous sulphate of sodium and potassium; also as glauberite, an anhydrous double sulphate of sodium and calcium. In the group of hydrous sulphates there are many sodium minerals, of which the most important is mirabilite, $Na_2SO_4 + 10 H_2O$, in which the sulphurous anhydride is 24.8%, soda 19.3%, and water 55.9%. It is distinguished from trona, with which it frequently occurs, by not effervescing with acids.

The deposits of natural soda, which are very extensive in certain parts of the United States, and elsewhere in the world, may at some future time become important sources of commercial soda, but at present they are generally too remote to make their exploitation profitable. However, a small amount is produced annually in Wyoming and in California.

W. P. Blake recently described a new deposit of trona, which has been located in the mining district of Altar, in the northern part of the State of Sonora, Mexico. It is only a short distance from the international boundary, and being situated near the Gulf of California it is easily accessible from Yuma.

The soda is found in a basin-shaped depression about one mile in length and breadth, the deposit covering an area of about 60 acres. So far as tested it has a depth of from 1 to 3 ft. and is partly overlaid by a stratum of sandy earth about 3 in. thick. The lower portions of the bed are saturated with water.

The purity of the mineral is remarkable. An average sample gave the following analysis: Sand, silt, etc., insoluble in water, 13%; iron oxide and alumina, 2.8%; lime, 1.14%; sodium chloride, 4.7%; sodium sulphate, 4.7%; sodium carbonate, 75.86%. The owners of the deposit estimate that it will yield 1,000 lb. of soda to each square yard of area, and that the soda can be dug and put on board ship for about $2 per ton. There is a scarcity of fuel at the locality, but for purposes of evaporation and the intense heat excessive dryness of the air will probably be sufficient.

THE NATURAL SODA DEPOSITS OF WYOMING.

BY WILBUR C. KNIGHT.

PROBABLY the most numerous and extensive natural soda deposits in the world exist in southeastern Wyoming. The term "natural soda," used in this connection, means the carbonate $Na_2CO_3+10\ H_2O$ and sulphate $Na_2SO_4+10\ H_2O$. These salts are found nearly pure, as mixtures, and also partially dehydrated. Throughout the arid region these compounds are known as alkali, and are found as thin incrustations along the valleys, on tablelands, around small ponds, and coating banks of clay and marl. In newly irrigated districts they are often so plentiful as to prevent the growth of vegetation. Small, thin layers, varying from a few square rods to an acre in extent, are numerous throughout the State; but the deposits of commercial importance occur in Natrona, Carbon, and Albany counties, where these salts have accumulated in basins provided with an inlet but no outlet. High water may have caused occasional overflows. All the basins are located in sedimentary rocks and range in elevation from 5,400 to 7,300 ft. above sea level. The salts occur in solid bodies and in lakes, and the former being often covered with water in the spring they have for that reason been called "soda lakes." In the solid deposits the soda varies from 1 to 16 ft. in thickness, and it is quite possible that there may be local depressions exceeding this figure. Some writers have estimated their thickness to be 70 ft., but there is no reliable data to warrant such a statement. In area the deposits vary from 5 to 160 acres. Lakes approximating the same size are associated with these deposits and are rich enough in soda to be of commercial importance. Geologically the basins containing the soda vary from Triassic to Tertiary. The deposits are stratified and not continuous. Bands of pure salt alternate with those of sand and mud. The muddy layers were formed during periods of slow, and the clear layers by rapid, accumulation. The solid soda may be cut, sawed, or blasted; blocks weighing from two to four tons have been taken out for exhibition.

Numerous theories have been advanced to account for the formation of these salts and the accumulation of the beds, but so far none are very satisfactory. It is definitely known that the deposits are of secondary origin, and that the salts have been brought into the basins in solution and evaporated. Some* have maintained that the salts have been derived from the decomposition of granitic rocks

---

* Attfield, *Journal of the Society of Chemical Industry*, Jan. 31, 1895.

and carried by streams into the basins. Others* have suggested that the depressions have been fed by springs of water carrying the salts in solution. The question of the primary origin of the salts will not be discussed in this connection, except briefly. The granitic theory seems untenable for the following reasons: (1) There are no depressions known in granitic rocks which contain soda. (2) The water coming from the Archean exposures is the purest known, and along streams flowing through a granitic country the soils are free from alkaline salts. (3) In no instance in Wyoming do these streams lead from the granitic rocks to soda deposits, and but few, if any, basins receive the drainage from them even during heavy rains or melting snows. (4) If the salts were formed by the decomposition of granitic rocks they would be mixtures of sodium and potassium, for the dominant feldspar in the Archean in southeastern Wyoming is orthoclase. The potassium salts are as a rule absent in these deposits, and never amount to 1%. On the other hand there are numerous instances where springs are associated with the deposits, of which the water contains sodium salts. This will in part account for the soda accumulations. There are, however, many places where there are no springs and where it is not possible that they ever existed. After a series of observations extending over a period of 12 years, during which time nearly all the deposits of the State have been examined, the following discoveries have been made: (1) The sodium salts are stored in the sedimentary rocks and they were deposited with the Mesozoic and Cenozoic strata. (2) Through the decomposition and destruction of these rocks the soda has been stored in the soil, in places where not enough rain has fallen to leach it out. (3) Rains and melted snow have dissolved a portion of these salts and carried them to their present resting places. (4) These facts, coupled with the spring theory, will account for every soda deposit in Wyoming. Both the carbonate and sulphate are stored in large quantities in the shales, marls, and clays,

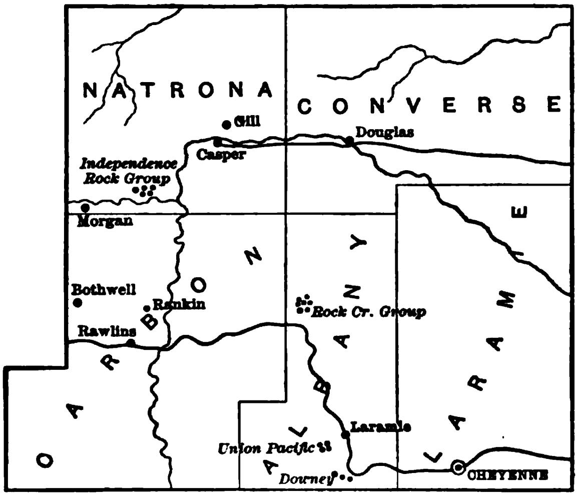

SODA DEPOSITS OF WYOMING.

---

* Ricketts, *Territorial Geologist's Report*, 1890, p. 67.

and it is not an unusual occurrence to find a layer of soda half an inch thick in a clay bed.* Small basins scooped out of Cretaceous rocks, and having no inlet to speak of, often contain considerable soda; springs coming from these rocks are rich in sodium salts. One in Fremont County contains over 5% of sodium carbonate. A well at Green River furnishes water which carries upward of 24% of sal soda. In fact there are scarcely any wells or springs in the Mesozoic or Cenozoic rocks that do not contain sodium salts, and the majority of them are so impregnated as to render the water valueless for domestic use or for steam purposes. The soils and rocks are rich in these soda compounds and the accumulation of these salts is in progress to-day, as it has been for centuries past and will be for centuries to come. Several thousand tons of soda have been taken from the Union Pacific deposits, and judging from the surface no one could tell from which part of the beds it had been taken.

The Natrona County deposits are divided into three groups, as follows: The Morgan, Independence Rock, and Gill. The Morgan group is situated on the south side of the Sweetwater River, in the vicinity of Split Rock. There are 100 acres in this basin, a small portion of which is solid soda, the remainder, a lake, is a solution of sodium sulphate. The depression is in Tertiary rock and has an inlet from the south and several small springs along the west side.

East of this group, and near Independence Rock, is the group of that name. Six large claims are scattered along the north side of the Sweetwater River, from below Devil's Gate to Berthaton, a distance of 12 miles. Five of these claims are owned by the Dupont Co. The Omaha, New York, and Philadelphia are solid soda, and the Wilmington and Wilkesbarre are lakes. The soda has a maximum thickness of 16 ft. The salts are mixtures of sulphate and carbonate, the western claims being chiefly sulphate and the eastern carbonate. The Omaha claim contains considerable bicarbonate of soda. The Mormons in early days quarried soda from this bed and hauled it to Salt Lake City. The remainder of this group belongs to the Syndicate Improvement Co., and is located to the east and north of the Dupont property at Berthaton. The claims of this company aggregate about 200 acres, and are solid beds and lakes. Soda has been taken from them to operate the soda plant at Berthaton. The soda is the same as that found in the eastern Dupont claims. It appears that the Syndicate Improvement Co. erected a plant at this point, anticipating that the Chicago & North-Western Railroad would build a line up the Sweetwater River. The road stopped at Casper, about 50 miles distant, and on this account it has been impossible to manufacture soda compounds and sell them in competition with Eastern producers.

The Independence Rock group are all found in basins in Tertiary rocks and have many springs associated with them. The Gill deposits are found in a depression in the Fox Hills group of the Cretaceous, about eight or ten miles northeast of Casper. These claims cover an area of 80 acres. The soda is reported to be quite thick, and is known to be a very pure sulphate.

The Carbon County deposits are less extensive than those of Natrona, and have also received but little attention. There are two groups—the Bothwell and

---

* Clay in this connection refers only to the stratified beds of sedimentary rock.

BLOCK OF SODA, DOWNEY DEPOSIT, WYO.

Rankin—besides numerous smaller basins that are not well known, but may prove to be of commercial importance.

The Bothwell is situated 25 or 30 miles northwest of Rawlins, in the Laramie group of the Cretaceous. It contains about 100 acres. The soda is solid, is a very pure sulphate, and is claimed to be quite thick. Definite knowledge concerning this group could not be obtained by the writer. The Rankin is about 17 miles northeast of Rawlins, in what is known as the "Alkali Flat." There is a small basin covered with a soda deposit and a somewhat large lake, together with numerous small ponds. The salt is sodium sulphate and is found in the Niobrara group of the Cretaceous.

There are three groups in Albany County: The Union Pacific, 13 miles southwest of Laramie, the Downey, 21 miles southwest of Laramie, and the Rock Creek, 12 miles northwest of Rock Creek. Of all the deposits in Wyoming the Union Pacific have received the most attention. They cover an area of about 60 acres; the soda is solid, and ranges in depth from 1 to 16 ft., and in composition it resembles the other sulphate deposits of the State. In 1885 the Union Pacific erected a large alkali plant at Laramie, and commenced the manufacture of soda compounds, chiefly carbonate and concentrated lye. The plant remained in operation for about two years and then shut down, though latterly it has been used to some extent to calcine soda for glass making. The reasons for suspending operations were never given to the public. Everything seemed favorable to the enterprise. A railroad was built to the deposits, and good slack coal was furnished for $1.25 per ton, and limestone for 50c. per ton. The Downey group has the same general character as the Union Pacific. It covers an area of 100 acres, and the soda has a maximum thickness of 12 ft. These deposits lie in a depression in Triassic sandstone, while the Union Pacific are in the Fort Benton group of the Cretaceous.

There are no less than 25 or 30 large and small basins in the Rock Creek group. The largest of these does not belong properly under the heading of "soda deposits," since it contains only a very small percentage of these salts. However, as it occurs with the group it has been thought best to include it with the others. It covers an area of 90 acres and is almost pure Epsom salt. The prominent basins in this group are known as the Brooklyn, Philadelphia, and Chicago, the Brooklyn being the largest. The Philadelphia is less than half the size of the latter; but the deposit is chemically the same. The Chicago is a mixture of magnesium and sodium sulphates in nearly equal proportions. In all there are over 200 acres of valuable deposits in this group. Holes have been dug to the depth of 10 ft. in the salts. The country rock is Triassic.

The soda industry in Wyoming has thus far amounted to very little. As in all new countries there have been many drawbacks. Labor has been expensive, with skilled labor scarce, and freight charges exceedingly high. So far as known the greatest difficulty in handling the sulphate has been to drive off the water of crystallization. With the introduction of new and improved methods, however, the soda industry in Wyoming would soon be an important one. There is at the present time at least 150,000,000 cu. ft. of available deposit in the State, and this is being constantly increased. Should a modern plant be erected and put in charge of a competent alkali manufacturer the anhydrous sulphate could be produced for $5 per ton, or less.

TABULAR STATEMENT OF THE NATURAL SODA DEPOSITS OF WYOMING.

Name of Deposit.	County.	Nature of Deposit.	Geological Position.	Kind of Salts.	Estimated Area.
Morgan	Natrona	Solid and aqueous	Tertiary	Sulphates	100 acres.
New York	Natrona	Solid	Tertiary	Sulphates and carbonates	70 acres.
Philadelphia	Natrona	Solid	Tertiary	Sulphates and carbonates	80 acres.
Wilmington	Natrona	Aqueous	Tertiary	Sulphates and carbonates	160 acres.
Wilkes-Barre	Natrona	Aqueous	Tertiary	Sulphates and carbonates	50 acres.
Omaha	Natrona	Solid	Tertiary	Sulphates and carbonates	5 acres.
Syndicate Imp. Co.	Natrona	Solid and aqueous	Tertiary	Sulphates and carbonates	200 acres.
Gill	Natrona	Solid	Fox Hills	Sulphates	80 acres.
Bothwell	Carbon	Solid	Laramie	Sulphates	100 acres.
Rankin	Carbon	Solid and aqueous	Niobrara	Sulphates	10 acres.
Union Pacific	Albany	Solid	Ft. Benton	Sulphates	60 acres.
Downey	Albany	Mostly solid	Triassic	Sulphates	100 acres.
Brooklyn	Albany	Solid and aqueous	Triassic	Sulphate of magnesium	90 acres.
Philadelphia	Albany	Solid and aqueous	Triassic	Sulphate of magnesium	40 acres.
Chicago	Albany	Solid and aqueous	Triassic	Sulphates of sodium and magnesium	20 acres.

ANALYSES OF NATURAL SODA FROM WYOMING. (*a*)

Name of Claim.	Per Cent. H_2O.	Per Cent. Insoluble.	Per Cent. Na_2SO_4.	Per Cent. Na_2CO_3.	Per Cent. $MgSO_4$.	Per Cent. NaCl.
Morgan (*b*)	51.06	1.08	45.17	....	....	2.16
New York (*c*)	....	19.30	72.40	5.10	....	2.52
Philadelphia (*c*)	....	22.88	71.37	3.10	....	1.83
Wilmington (*d*)	....	....	....	....	....	....
Wilkes-Barre (*c*)	....	9.23	39.04	59.00	....	1.83
Omaha (*e*)	9.01	2.61	25.75	*g* 60.71	....	2.13
Syndicate Imp. Co. (*e*)	10.16	2.43	34.33	50.12	....	2.09
Gill (*e*)	1.61	....	94.50	....	2.52	0.54
Rankin	39.52	10.52	44.51	....	2.12	1.82
Union Pacific (*f*)	54.90	0.50	44.05	....	....	....
Downey	54.60	0.08	44.17	....	....	1.13
Brooklyn	49.75	0.11	....	....	49.34	0.21
Philadelphia	48.90	3.33	0.28	....	46.93	0.44
Chicago	32.43	0.16	33.90	....	33.13	....

(*a*) Collected from various sources. (*b*) Natural. (*c*) Dry sample. (*d*) 2,348 grains per gallon of Na_2CO_3. (*e*) Sample nearly dry. (*f*) Includes bicarbonate.

(*g*) It is absolutely known that this salt contains appreciable quantities of magnesium and chlorides. This analysis was furnished for publication by the Alkali Co. at Laramie some years ago. H. Pemberton, Jr., and G. P. Tucker reported sodium biborate from this group.—*Chem. News*, Vol. LXVIII., pp. 19, 20.

SODIUM.

THE properties and preparation of metallic sodium were described in THE MINERAL INDUSTRY, Vol. II. Since that time the production of this metal has been undertaken in the United States by the Niagara Electro-Chemical Co., a branch of Roessler & Hasslacher, which erected works at Niagara Falls in 1896. These works are equipped with three kilo-watts rotary transformers, which run at 500 revolutions per minute, and six static transformers which reduce the multiphase current supplied by the Niagara Falls Power Co. from 2,000 to 118 volts ; by means of Stillwell regulators the voltage may be still further reduced to 90. Copper leads run from the switchboard to the pot-room and the current passes in series through the pots filled with molten caustic soda. The sodium is baled out of the pots regularly and cast into bricks.

Sodium is made in England by the Aluminium Co. at Oldbury and at two or three places in Germany. The Castner electrolytic process is employed at each of these works. Indeed the production of sodium by the old chemical process has now been abandoned entirely. In the Castner process an electrolyte of fused caustic soda is employed with an anode of iron and a cathode of copper. The sodium is reduced at a comparatively low temperature and is ladled from the furnace into molds. The cost of making sodium by this process is kept a profound secret, nothing being definitely known concerning it except that it is much more economical than the old process which it displaced. It is also impossible to arrive at statistics of the production, although there is reason to believe that it is considerable, since the Aluminium Co. of England alone makes about 260 long tons per annum. The current employed at the works of the Aluminium Co. amounts to 1,000 ampères at 4.5 volts. The product is worth at the present time about 50c. per lb.

We are unable to give statistics as to the amount of sodium produced at Niagara Falls. Nearly the entire output, however, is used for the preparation of sodium peroxide, which is made by a very interesting process. The sodium is put in measured quantities into dishes which travel through a long tube fixed in a furnace. Dry air in regulated quantities is then passed through the tube, which is kept at a certain temperature, and the sodium is oxidized to peroxide. The peroxide comes out as a beautiful canary-colored substance, which is immediately sent to the grinding-room to be ground and packed. The works of the Niagara Electro-Chemical Co. employ about 50 men.

Sodium peroxide is used chiefly as a substitute for hydrogen peroxide. Until recently the bleacher has been obliged to buy peroxide of hydrogen in the form of a solution, which is bulky and likely to lose its strength, and it is difficult to keep a bath of uniform strength. In peroxide of sodium, however, the bleacher has a substance which, it is said, contains 12 times as much oxygen available for bleaching as the ordinary 10-volume hydrogen peroxide solution, and which can be kept an indefinite time.

There is not much sodium sold in the metallic state, the greater part of the product being used for the manufacture of sodium peroxide and sodium potassium cyanide. The manufacture of the latter with the aid of sodium depends upon the fact that when the yellow prussiate of potash is heated with sodium neither oxygen nor alkaline carbonates are introduced, the product being an almost chemically pure mixture of sodium and potassium cyanide.

A small amount of sodium is now used in the form of ferro-sodium for the purification of cast iron and steel in foundries. The percentage of sodium in the alloy varies from 25 upward. By its use a perfectly clean metal for casting is obtained. The castings are free from sullage and blowholes, and come out with a good surface either for machining or as finished castings. The cost varies from 0.75 to 2c. per 112 lb. of iron. The amount of ferro-sodium that is required varies from 10 to 30 lb. per long ton of iron or steel.

H. Neuendorf has patented a process for the manufacture of sodium peroxide from sodium by heating the latter in a properly regulated current of air in a special furnace, which is described in the patent specification.*

The price of metallic sodium in New York in 1897 varied from 65c. to $1 per lb. for small amounts, according to the size of the lot and style of packing. In large quantities the metal was obtainable at 50c. per lb.

---

* English Patent No. 422, Jan. 6, 1897.

STRONTIUM SULPHATE.

STRONTIUM sulphate or celestite is a crystalline mineral of vitreous luster, sometimes inclining to pearly. Its hardness is 3 to 3.5, and sp. gr. 3.95 to 3.97. Its streak is white, and its color also is generally white, but often is faintly bluish and sometimes reddish. It is represented by the symbol, $SrSO_4$, containing 43.6% of sulphuric anhydride and 56.4% of strontia. The mineral commonly contains, however, calcium and barium, and when the percentage of these elements is large it is known respectively as calciocelestite and barytocelestite. Before the blowpipe celestite frequently decrepitates, fuses at 3 to a white pearl, coloring the flame strontia red. The fused mass gives an alkaline reaction. On charcoal, celestite fuses and in the reducing flame is converted into a difficultly fusible liver-like mass, which, when treated with hydrochloric acid and alcohol, gives an intensely red flame. It is insoluble in acids.

Celestite is usually associated with limestone or sandstone of Silurian, Devonian, Jurassic and other geological formations. It occurs also in beds of gypsum, rock salt and clay, and is frequently found associated with sulphur in some volcanic regions, notably in Sicily, where splendid crystals are obtained at Girgenti.

There was a production of 40 tons of celestite in the United States in 1897, this having come from Put-in-Bay, Ohio, where there is said to be a vein of the mineral 6 ft. in width. The existence of this mineral at numerous localities in the United States has been known for a long time. Dana describes its occurrence in the limestones about Lake Huron; at Drummond Island, Strontian Island, and Put-in-Bay, Lake Erie; at Chaumont Bay, Lake Ontario; and at Schoharie and Lockport, N. Y. A blue fibrous celestite is found at Bell's Mills, Blair County, Pa. In fact, the localities where specimens of this mineral may be found would make a long list. There are deposits in the vicinity of Burnet, Texas, which are said to be sufficiently large to be workable. The slight value of the crude mineral, however, would prevent its exploitation in a remote locality. The large vein at Put-in-Bay, Ohio, mentioned above, was discovered about 17 years ago by a German geologist, who found the mineral in crevices around the shores, and subsequently sunk a shaft near the center of the island, directly opposite the Perry Cave. The 40 tons of mineral referred to above were shipped to Germany. This being an experimental lot, the shippers declined to make public the price realized for it.

Celestite is analogous to barytes, and like the latter has a high specific gravity, this ranging from 3.95 to 3.97. It is used for the preparation of nitrate of strontium (red fire), as a pigment like barytes, and in beet-sugar refining, the most of the mineral being consumed probably in the last direction. The market value of celestite is very low, probably not in excess of $2.50 per long ton, ex ship at Liverpool or Antwerp. There was a production of 18,042 long tons of celestine in England in 1896, valued at £5,188. No production is reported in the statistics of any other country.

The price of strontium sulphate (celestite) in Europe being so low it does not seem probable that an export trade in this mineral can be developed even under the most favorable conditions. There is a considerable importation of strontium salts into the United States, largely the nitrate for pyrotechny, and with a cheap supply of the crude mineral it is likely that their manufacture may be undertaken in this country. The increasing development of the beet-sugar industry in the West ought also to offer an inducement to the establishment of this industry here.

The compound of strontium which is used in refining beet sugar (and also for the extraction of crystallizable sugar from molasses) is the hydrate, $Sr(OH)_2$. Its use depends upon the property of strontium oxide and strontium hydrate to combine with sugar to form saccharates which are easily decomposible by carbonic acid. In this process of sugar refining 1 kg. of molasses requires about 0.5 kg. of strontium hydrate dissolved in 1.5 kg. of boiling water.

For the preparation of strontium hydrate 20 parts of finely ground strontium sulphate are mixed with 7 parts of slack coal and calcined in a suitable furnace for three or four hours at a plus pressure, at the end of which time the sulphate is mostly converted into sulphide. The charge withdrawn from the furnace and cooled is crushed and then leached with water until the solution acquires a strength of 24° T., when it is run off and allowed to settle. The clear solution is then drained to crystallizing vats, where it is treated with a strong solution of caustic soda, which immediately precipitates the more part of the strontium as hydrate according to the reaction:

$$SrS + NaOH + H_2O = Sr(OH)_2 + NaHS.$$

The liquor, which consists chiefly of a solution of sodium sulph-hydrate, is then drawn off and evaporated to a strength of 30° T., when it is run to other crystallizing vats, where it deposits practically all of its hydrate. The impure hydrate is washed, dried, and calcined at a gentle heat in a muffle surface, whereby part of the water of crystallization is driven off.

The nitrate of strontium used in pyrotechny is prepared by treating the sulphide or oxide with nitric acid. Ten pounds of pure strontium sulphate yields theoretically 6.5 lb. of the sulphide and 11.5 lb. of the anhydrous nitrate, 6.9 lb. of pure nitric acid being required. The strontium nitrate of commerce commonly contains a small amount of barium nitrate. An analysis of an English brand in common use showed: Strontium nitrate, 96.44%; barium nitrate, 3.46%; calcium nitrate (by difference), 0.08%; and water, 0.02%.

SULPHUR.

The production of sulphur in the United States in 1897 was 1,690 long tons, against 3,800 long tons in 1896. The falling off was, in reality, less than it appears from these statistics, since we are now satisfied that the returns received and reported for 1896 in The Mineral Industry, Vol. V., overstated the actual production that year. Of the production in 1897 about 1,000 tons was mined in Utah; the remainder was obtained by the Frasch process, as described in The Mineral Industry, Vol. V., p. 514, from the deposits in Calcasieu Parish, La. These were worked during the first half of the year only, operations having been suspended during the second half, owing to the unprofitable character of the work done previously. Up to the time of closing down the total production by this process in Louisiana had been 3,190 long tons. Work was resumed in the early part of the current year (1898), in order to give the Frasch process a final trial, but the result has been unsatisfactory.

Several new deposits of sulphur in various parts of the United States were reported in 1897, but none of them became productive, and several investigated proved to be of no consequence.

The domestic production, imports, and consumption of sulphur are shown in the following table:

SULPHUR PRODUCTION, IMPORTS, AND CONSUMPTION IN THE UNITED STATES.

Year.	Production.			Imports.								Consumption.	
	Sulphur.			Crude.		Flowers of Sulphur.		Refined.		Totals.			
	Long Tons.	Value.	Value per Ton	Long Tons.	Value.	Long Tons.	Value.	Long Tons.	Value	Long Tons.	Value.	Long Tons.	Value.
1891	1,071	$39,600	$37.00	116,971	$2,675,192	206.00	$6,782	10.00	$1,997	117,187	$2,683,971	118,208	$2,722,026
1892	1,630	54,750	33.00	100,938	2,189,481	158.00	5,439	26.00	4,106	101,122	2,199,026	102,752	2,253,778
1893	1,200	26,880	22.50	107,601	1,903,191	240.96	5,746	41.73	1,017	107,885	1,909,954	109,020	1,935,474
1894	441	7,056	16.00	124,467	1,734,643	165.00	4,145	41.00	1,207	124,673	1,739,641	125,114	1,747,405
1895	1,650	26,400	16.00	125,950	1,593,148	581.00	12,888	229.00	4,378	126,760	1,610,414	128,410	1,636,814
1896	3,800	72,200	19.00	145,318	2,083,076	665.00	13,266	447.00	8,226	146,430	2,106,568	150,230	2,178,768
1897	1,690	34,814	20.60	138,846	2,442,240	319.00	7,950	148.00	3,387	139,313	2,453,577	141,003	2,488,391

SHIPMENTS OF SULPHUR FROM SICILY TO THE UNITED STATES. (IN LONG TONS.)

Port.	1891.		1892.		1893.		1894.		1895.		1896.		1897.	
	Seconds.	Thirds.	Seconds.	Thirds.	Seconds.	Thirds.	Seconds.	Thirds.	Seconds.	Thirds.	Seconds.	Thirds.	Seconds.	Thirds.
New York	29,358	19,665	34,390	14,700	29,146	14,250	33,150	13,725	35,888	19,975	50,557	17,796	57,174	13,300
Charleston	17,196	4,450	4,010	500	11,665	1,860	3,273	12,023	700	8,450	2,330	5,370	1,500	3,630
Philadelphia	450	6,406	3,600	6,800	1,900	6,260	350	5,050	1,200	7,150	500	5,500	199	5,210
Baltimore	4,510	6,855	900	11,455	2,050	7,900	600	14,700	1,100	8,620	3,650	10,500	3,798	10,033
Boston	1,300	650	1,825	1,500	500	......	1,017	3,300	2,350	2,600	4,600	700	7,220	1.000
Savannah	850	700	600	570	3,450	1,880	5,695	4,100	3,784	800	8,370	1,025	4,700	......
Wilmington, N. C.	1,900	700	......	......	......	1,140	......	1,890	......	650	1,260	1,400	......	1,550
New Orleans	......	......	......	......	1,900	......	2,400	......	1,700	......	2,100	......	3,340	......
Other ports (*a*)	1,200	1,330	4,000	......	......	......	800	3,700	1,880	2,380	7,975	1,290	4,883	600
Totals	56,764	40,756	49.325	35,525	50,611	33,290	47,285	58,488	48,602	50,625	81,342	43,581	82,814	35,323

(*a*) Norfolk, Mobile, and Portland.

The world's supply of sulphur is derived (1) from deposits of brimstone, (2) from sulphur recovered at alkali works by the Chance-Claus process, (3) from pyrites, (4) from blende roasting, and (5) from matte roasting. It is converted chiefly into sulphuric acid, although a good deal of brimstone is used in the form of flowers of sulphur, and in Germany a considerable amount of sulphurous acid is made from the fumes of roasting furnaces; at one works in Upper Silesia also the roast-gases are used in the preparation of artificial gypsum, which is sold as a fertilizer, but the object there is not so much to make this product as to neutralize the fumes, the latter being required by law.

In Germany the manufacture of sulphuric acid from blende and matte roasting is extensively carried on, most of the important zinc works being provided with installations for either this purpose or for the preparation of sulphurous acid. In the United States sulphuric acid is made from blende at only two works—namely, those at La Salle and Peru, Ill., and the sulphur fumes from matte roasting are generally wasted.

The production of Chance-Claus sulphur from alkali waste is carried on chiefly in England, where the recovery amounts to about 20,000 long tons per annum. The supply of brimstone is drawn chiefly from Sicily. In connection with the sulphur industry reference should be made also to the articles on "Pyrites" and "The Chemical Industry," elsewhere in this volume.

BRIMSTONE IN FOREIGN COUNTRIES.

The total production of brimstone in the world is shown in the following table, which does not, however, include the output of Chance-Claus sulphur, of which no record is kept in the mineral statistics of the United Kingdom:

WORLD'S PRODUCTION OF SULPHUR. (*a*) (IN METRIC TONS.)

Year.	Austria	France. (*c*)	Hungary	Germany	Greece.	Italy. (*b*)	Japan.	Russia.	Spain.	Sweden	United States.
1892	53	7,231	42	2,155	1,525	418,555	20,521		7,822	46	1,656
1893	44	3,733	70	2,161	2,400	417,671	23,930	403.0	4,686	75	1,219
1894	76	851	93	2,168	1,946	405,781	18,787	589.0	3,417	36	448
1895	(*d*)	4,213	102	2,061	1,480	370.766	15,557	1.5	2,231	(*d*)	1,676
1896	(*d*)	9,720	138	2,263	1,540	426,353	(*e*)	(*e*)	1,800	77	2,845

(*a*) From the official reports of the respective governments. (*b*) Crude. (*c*) Raw mineral; limestone impregnated with sulphur. (*d*) *Nil.* (*e*) Statistics not yet published.

Japan.—A late British consular report gives the production of sulphur from the mines on the Island of Yezo, Japan, in 1896 at 16,213 tons, which was about the same as in 1895. The exports from Hakodate in 1896 were 7,992 tons, a small decrease from the previous year.

Mexico.—The exploitation of sulphur deposits about 20 miles above the mouth of the Rio Colorado on the Gulf Coast of Lower California was undertaken by the Mexican Sulphur Co., a Pittsburg corporation, but no receipts were reported by the American Customs Bureau.

The sulphur deposits in the crater of Popocatepetl were worked for local consumption. The tramway to the summit, for which the line has been surveyed, has not yet been built, nor is there any truth in the reported sale of these deposits to an American corporation, so far as we are informed. A new discovery of sulphur is said to have been made on the Peak of Orizaba.

New Zealand.—The high price of brimstone last year led to the reopening of the mines at Titeitere, about 10 miles from Rotorua, which are now being exploited actively. The product is bagged and shipped to Auckland and Sydney, where it is sold to the Australian acid makers.

Russia.—H. H. Niedenfuhr published in the *Chemiker Zeitung* a detailed description of the sulphur beds of the northeastern Caucasus. The deposits may be divided into three groups. Those of the first belong to the Salatan and Gimry chain, which extends to the town of Petrovsk on the Caspian. The second group occurs in the Dagestan, to the south of Petrovsk, while the third is situated in the ranges south of Grosny. In view of the abundance of sulphur in the Caucasus, it is surprising that the Baku industry imports annually 250,000 pouds of Sicilian sulphur instead of using the native product. It is doubtful, however, whether a change will be made, as Nobel Brothers, the only firm in the place that possesses a modern plant for sulphuric acid manufacture, has directed its attention to the local copper pyrites. St. Petersburg capitalists, however, contemplate the erection of a sulphuric acid-making plant at Petrovsk or at Grosny, in the vicinity of the sulphur beds.

Sicily.—The most important feature of the year was the control of the Sicilian sulphur industry by the Anglo-Sicilian Sulphur Co., which was organized in 1896 by Italian and English bankers to market the entire product of Sicilian and Chance-Claus sulphur. The details of the organization were described in THE MINERAL INDUSTRY, Vol. V. According to the first report of this company, for the fiscal year ended July 31, its receipts of sulphur in Sicily were 267,795 long tons, and its sales 156,017, at an average gross profit of about 8s. 6d. per ton. The receipts would have been larger, but some of the mine owners had contracts entered into previous to those made with the company, under which they had to deliver about 50,000 tons of sulphur; of this amount about 40,000 tons were delivered during the year, leaving 10,000 tons still to deliver. As regards that part of the company's business which is represented by recovered sulphur, prior to the completion of the arrangements with the United Alkali Co. it had sold for delivery through 1897 about 9,000 tons of sulphur, which entailed a loss to the company of between £1,300 and £1,400. But, as these arrangements were made by the organizers of this company, the directors had to accept the contracts, or else to reject the English business as a whole, which it was not thought advisable to do. Subsequent sales wiped out this loss and left a profit of about £3,100 on the English business.

The gross trading profit of the Anglo-Sicilian Sulphur Co. in its first fiscal year was £63,752, which with interest on temporary investments, etc., made a gross profit of £68,383. Expenses in Sicily were £10,415, in London £8,614. Writing off £6,433, a dividend on the preference shares to the amount of £30,129 was declared, the remainder being carried to capital guarantee and reserve fund. When the company was organized it was expected that it would control over 80% of the Sicilian output. It has failed, however, to handle so large a percentage of the business, owing chiefly to the increase in output, the more part of which has come from outside producers.

During the year the Anglo-Sicilian Sulphur Co. entered into contracts with the principal refiners of Catania to refine for its account at a fixed charge per ton, the company handing to them the crude sulphur and receiving back the refined.

The exportation of sulphur from Sicily in long tons (2,240 lb.) in 1897 was 410,538, against 396,745 in 1896. The stocks on hand at the shipping ports amounted to 240,367 tons on December 31, 1897, against 222,999 tons at the close of 1896, and 203,756 tons at the close of 1895. As the consumption at home is comparatively nothing, a comparison of the exports and the stocks shows that the total production in 1897 was 427,906 tons, against 415,988 tons in 1896. The average price at shipping ports showed a considerable improvement; in 1894 it was 56.50 lire ($10.85); and fell to 52.10 lire ($10) in 1895; but in 1896 the effect of the combination of producers was shown, and the average rose to 68 lire ($13.05) per ton.

In view of the facts given the *Rassegna Mineraria* thinks that several points deserve attention. In the first place there was a notable increase in stocks, notwithstanding the gain in exports. In the second place it seems to be shown that the producers need not be seriously alarmed over any substitution of pyrites for brimstone at the present price for the latter. Thirdly, the results of recent years seem to prove that a very low price, which does not pay the producer, has little or no effect in extending the consumption of sulphur; on the contrary, that consumption has increased with a higher price. Finally, it appears that the mining crisis in Sicily was not due to over-production, but rather to competition among the producers which resulted in the excessively low prices. It seems to be established that the production will be absorbed by the demand at any reasonable figure.

Charles M. Caughy, the American consul at Messina, reported recently to the Department of State that it is doubtful whether the Anglo-Sicilian Sulphur Trust will succeed in maintaining prices. The trust is now buying from producers their sulphur at prices which make the cost about $15.80 per ton on board at the shipping ports. Although prices steadily declined during the years 1891–96, the production increased. Stocks also increased. These facts unquestionably prove that the cost of production has diminished. Cheaper transportation has been gained by the construction of roads and railways, and improvements have been made in mining and smelting. The Italian parliament abolished the export duty of $2.06 per ton with the object of favoring exports, since this duty increased the cost to the foreign consumer. The artificial advance which the sulphur syndicate has established is in opposition to all the above facts.

TOTAL EXPORTS OF SULPHUR FROM SICILY SINCE 1890. (*a*) (IN LONG TONS.)

Country.	1890.	1891.	1892.	1893.	1894.	1895.	1896.	1897.
United States	106,656	97,520	84,450	83,901	105,773	99,227	124,923	118,137
France	71,790	56,168	73,176	89,736	56,932	69,696	76,789	84,895
Italy	40,231	42,212	38,711	54,486	49,895	49,349	54,009	73,052
United Kingdom	26,213	23,408	24,858	27,453	22,165	24,043	21,918	24,530
Greece and Turkey	18,103	11,414	*b*14,845	*b*13,840	*b*16,870	*b*16,195	*b*18,556	*b*13,866
Portugal	16,695	11,439	13,490	14,545	8,670	14,562	12,001	7,054
Russia	17,158	11,930	14,178	19,730	17,977	17,962	18,752	17,533
Germany	15,703	10,629	14,326	16,259	16,437	15,472	15,680	19,721
Austria	8,746	10,575	9,096	10,169	11,494	12,170	13,799	15,993
Turkey	4,231	3,000	(*b*)	(*b*)	(*b*)	(*b*)	(*b*)	(*b*)
Spain	5,679	3,845	7,382	3,499	3,445	5,753	5,910	4,039
Belgium	7,279	5,089	5,133	4,358	5,644	6,410	7,527	9,253
Holland	....	....	2,183	2.957	2,365	3,335	3,834	3,599
Sweden and Norway	3,314	2,252	4,561	6,579	7,887	5,730	14,540	11,226
South America	....	....	....	....	....	....	....	....
Australia	....	....	1,200	....	....	....	....	....
Denmark	400	300	(*c*)	(*c*)	(*c*)	(*c*)	(*c*)	(*c*)
Other countries	2,565	3,542	3,152	1,680	3,376	7,732	8,562	7,651
Totals	344,763	293,323	309,536	349,192	328,930	347,636	396,745	410,533
Stock in Sicily at end of year.	106,770	117,037	175,299	210,665	198,518	208,756	222,999	240,367

(*a*) From report of A. S. Malcomson, New York. (*b*) Exports to Greece and Turkey combined after 1892. (*c*) Included in exports to Sweden.

RECOVERY OF SULPHUR FROM SULPHURETTED HYDROGEN.

At the meeting of the Nottingham section of the Society of Chemical Industry, December 15, 1896, F. J. R. Carulla read a paper on "The Recovery of Sulphur from Sulphuretted Hydrogen," in which he described certain circumstances when he had found that sulphur in the free state could be obtained in large quantities by bringing H_2S into contact with heated SO_2, such as is produced in a pyrites kiln, whereby the sulphur from this gas is also released according to the equation:

$$2H_2S + SO_2 = 2H_2O + 3S.$$

The sulphur, which sublimes in the process, can be collected in suitable chambers, as in the well-known method of Claus. By using the same amount of H_2S, the author obtains 50% more sulphur than is possible by the Claus process, the extra yield being derived from the SO_2. Specimens of sulphur produced in this way in 1893 were exhibited, which looked fairly pure. Mr. Carulla said he had been induced to refer to the subject, since Messrs. Brock and Hurter had recently taken out a patent for a similar process, a description of which appeared in the *Journal of the Society of Chemical Industry*, Vol. XVI., p. 536; and continued: "The object of this paper is in no way to institute any prior claim, but rather to show the great value that may attach to the invention, and to bear witness to the excellence of the product and likely efficiency of the process."

THE BRIMSTONE MARKET IN 1897.

THE low prices prevailing for brimstone during the summer excited hope for their continuance, but later unforeseen changes took place which materially altered the conditions affecting the price and supply of the product. Among the first causes to affect the price was an advance in freights, there being little berth room available by reason of the practical cessation of shipments of fruit, and in order to import brimstone entire cargoes had to be engaged. The Anglo-Sicilian Sulphur Co. claimed that the low prices during the summer were below cost of production, and, finding the conditions more favorable than they had been, arbitrarily raised the price. Of course the claim that previous prices were less than the cost of production was untrue, as is shown by the report of the company for its first fiscal year.

Best unmixed seconds opened in January at $20@22 per ton for spot and at 19.25@21 for shipment; thirds were from 75c. to $1 less. In March this price was shaded to $19.75@20.50 for spot and $19.50@20.50 for shipment, with thirds still quoted at 75c.@$1 less per ton. In April spot best unmixed seconds were selling at $19.25@20.50 per ton, and shipments were quoted at $19@19.75, while thirds ranged from 50c.@$1 less. May showed a little variation from the prices in previous months, $19.50@20 being quoted for best unmixed seconds on spot and $19@19.25 for shipment; thirds were 50@75c. less. In June best unmixed seconds rose again to $20 per ton for spot, and to $19.50 for shipments, while thirds were 50c. less. In July an advance of 50c. was made on best unmixed seconds; thirds were from 50c. to $1 less. In August $20@21 was quoted for seconds on spot and $20.37½@20.75 for shipment; thirds, 75c.@$1 less. In September 50c. more was asked for the best unmixed seconds on spot, but shipments were steady at $20.65, and thirds from $1@1.15 less. The October price was $21@22.50 for spot seconds; shipments were quoted at $21.25@22, and thirds at $1 less. In November $20.50@21 was the selling price of best unmixed seconds on spot, and $19.75@20.50 for shipment; thirds, $1 less. December opened with the price at $21.50 for spot seconds and $20.75 to arrive; thirds, $1 less.

PRICE OF BRIMSTONE PER LONG TON IN NEW YORK.

Month.	1896.		1897.		Month.	1896.		1897.		Month.	1896.		1897.	
	Seconds.	Thirds.	Seconds.	Thirds.		Seconds.	Thirds.	Seconds.	Thirds.		Seconds.	Thirds.	Seconds.	Thirds.
January..	$15.37	$15.00	$21.00	$20.10	May.......	$16.10	$15.66	$19.75	$19.12	September	$23.12	$22.12	$21.00	$19.92
February	15.00	14.50	20.55	19.65	June......	17.84	17.02	20.00	19.50	October...	23.55	22.00	21.75	20.75
March ...	15.09	14.59	20.10	19.20	July.......	18.75	18.16	20.50	19.75	November.	22.65	21.87	20.75	19.75
April.....	15.72	15.47	19.87	19.12	August....	21.65	21.10	20.50	19.62	December.	23.06	22.14	21.50	20.50

Average for 1896: Seconds, $19.00; thirds, $18.30. Average for 1897: Seconds, $20.60; thirds, $19.04.

TALC AND SOAPSTONE.

Talc in composition is essentially an acid metasilicate of magnesium, represented by the symbol $H_2Mg_3Si_4O_{12}$ or H_2O, $3MgO$, $4SiO_2$=silica 63.5%, magnesia 31.7%, water 4.8%. The water goes off only at a red heat. Pure talc is a greasy mineral of 1 to 1.5 hardness and 2.7 to 2.8 sp. gr. It has a pearly luster. In color it is apple-green to white; also greenish-gray and dark-green. Its streak is white. It is subtransparent to translucent. Mineralogically talc is classified into the three following varieties: (1) Foliated; (2) massive steatite or soapstone; (3) pseudomorphous.

Commercially a different classification is employed. The pure massive talc of soft, greasy feel which is suitable for the manufacture of crayons, grinding to a fine, unctuous powder, etc., is known as talc. The less pure stony varieties which are employed for cutting into slabs for the manufacture of wash basins, etc., are known as soapstone; while a third variety, which has a distinct fiber, and so far is produced only in St. Lawrence County, N. Y., is known as fibrous talc or agalite. In our statistical compilation we have this year classed these varieties respectively as "common talc," "soapstone," and "fibrous talc." The production in the United States is given in the following table:

STATISTICS OF FIBROUS TALC AND SOAPSTONE IN THE UNITED STATES.

(In tons of 2,000 lb.)

Year.	Production.									Imports.		
	Fibrous Talc.			Common Talc.			Soapstone.			Tons.	Value.	Per Ton
	Tons.	Value.	Per Ton	Tons.	Value.	Per Ton	Tons.	Value. (*a*)	Per Ton			
1893....	36,500	$337,625	$9.25	7,762	$69,858	$9.00	12,338	$123,380	$10.00	1,360	$12,825	$9.43
1894....	50,500	454,500	9.00	8,907	80,163	9.00	12,137	121,370	10.00	622	6,815	10.95
1895....	40.000	320,000	8.00	9,063	86,099	9.50	13.070	130,700	10.00	3,165	26,843	8.48
1896....	51,816	256,080	4.94	7,098	63,585	8.97	14,350	143,500	10.00	1,950	18,693	9.60
1897....	58,836	288,185	4.90	9,563	82,795	8.66	18,974	189,740	10.00	799	8,423	10.54

(*a*) In reporting the value of their output of soapstone producers generally give the figures for the finished articles which they make. Since a varying proportion of labor enters into these, such figures are apt to be misleading. Few producers are able to name a value of the crude stone, or roughly dressed blocks. We have therefore valued the material arbitrarily at this stage at $10 per ton.

Common talc and soapstone were produced in the United States in 1897 in Vermont, Pennsylvania, North Carolina, Georgia, and Virginia. A new deposit of much promise was opened in Vermont. The production in the other States was derived from the same mines as heretofore. An interesting feature of the year has been the exportation of North Carolina talc and its reimportation under the name of French talc. A good deal of the mineral produced in North Carolina is of exceptionally pure quality, and without doubt equal to the best grade of French. It is prevented from standing upon its own merits only by the trade prejudice in favor of the name "French talc." The production of fibrous talc was derived entirely, as heretofore, from the mines in the vicinity of Gouverneur, St. Lawrence County, N. Y. This material is ground and used chiefly in the manufacture of paper. The falling-off in the output in 1897 is attributed to the growing disinclination of paper makers to use this mineral as a filler, since even the best grades contain a little grit. China clay and other material appear, therefore, to be gradually replacing fibrous talc in paper making.

The most important deposits of talc and soapstone in the United States are situated in Vermont, New York, and North Carolina. These are described in the separate articles which follow.

The demand for talc has been increasing lately and the price has increased in consequence thereof. At the end of 1897 the best American mineral, pulverized and sacked, sold at $16 per short ton in New York. French and Italian talc were proportionately higher, but this difference is largely a matter of trade prejudice, and it is probable that there will be a gradual approximation between the prices of French and the best American mineral. The value of talc depends upon its purity of color (white) and its soapy feeling when ground very fine. The market requires a "floated" or air-separated mineral, which must be free from quartz, mica, ferric oxide, etc.

Talc is used as a "filler" for paper, as a lubricant, non-conductor of heat, electric insulator for foundry facings, waterproof wall plaster in bathrooms, ornamental finishing on walls, face powder, shoe powder, to wax floors for dancing, for tailor's chalk, crayons, slate pencils, gas tips, and in soap making. Talc of a dark color is used as an adulterant of graphite for lubrication. New uses of talc are being developed constantly.

California.—On Santa Catalina Island, off the California coast, there is a very extensive deposit of talc and soapstone which is worked by Banning & Co. In this there is mineral which is pure steatite, grinding to a white powder, but this is expensive to obtain on account of the impurities which have to be separated. The foreign particles consist partly of ferric oxide, which gives the ground powder a pink tint. There is other stone in large quantities with more or less impurities, which is cut into slabs, resembling the soapstone from Francestown, N. H. It is of close grain, and takes a beautiful green polish, merging into a mottled black. When first quarried it is of a bluish color.

The demand for the material is steadily growing in California, although it is not as yet well known outside of Los Angeles. The quarries are conveniently located on the north side of Santa Catalina Island, and the owners having their own transportation plant are able to place the stone on cars at San Pedro at comparatively low cost. They have a small factory in Los Angeles, which at the present time is running to its full capacity.

The softer grade of this material is used almost exclusively for switchboards in California, it being hard enough to take a good polish, and the ease with which the numerous holes required in all switch and keyboards are drilled makes it a very desirable article for the electricians. The soapstone of these quarries passes into serpentine, which is mined and used for ornamental purposes, it being a handsome stone and capable of taking a high polish.

North Carolina.—(By A. E. Heighway)—The talc of western North Carolina and northern Georgia is of exceptionally pure quality, being free from grit and all coloring matter and extremely greasy. In a great part it is strictly amorphous; any crystals of calcite are quite distinct and can be easily picked out and thrown aside. The talc in this region occurs in connection with marble and sandstone, the talc often merging gradually into the former. The deposits occur in a zone extending nearly northeast and southwest, a railway line running for a long distance almost directly over them.

Before the building of the Atlanta, Knoxville & Northern and Western North Carolina railways talc was mined on a small scale in this region to line the copper smelting furnaces at Ducktown, Tenn., for which purpose it had to be furnished in blocks not smaller than the size of an ordinary brick and sold for $20 per ton. Only two talc deposits were known at that time; one was about five miles southwest of Murphy, on the Notta River (now called the Atlanta mine), and the other about 29 miles northeast of the first, on the Nontahatch River (now called Hewitts' mine). The talc of these deposits differs in quality. That of the former is soft and white, almost translucent, easily broken and cut with a knife, free from grit and devoid of fiber; the most part of it is too soft for pencils. The Hewitt talc is harder and tougher and semi-translucent, in appearance resembling light-colored cow-horn and transmitting about the same light as cow-horn. This talc is used for pencils, crayons, and especially for gas tips, the so-called "lava tips." It is also employed for electrical insulators, tailor's chalk, etc. This talc was so valuable that a wagon haul of 100 miles to Cleveland, Tenn., did not prevent its shipment in considerable quantity to the D. M. Stewart Manufacturing Co. of Cincinnati, now of Chattanooga. Before the building of the railways into the region other deposits were discovered, the most noteworthy being that at Kinsey Station, N. C., where is found what is probably the most beautiful talc of the region. Other deposits were found at various places along the line of the railway northeast of Murphy. The quality varies from mineral of the consistency of soft clay to that of hard slate and of all colors from pure white to dark blue. One deposit has mineral which is somewhat fibrous, but it is not a true fiber like that of the talc of St. Lawrence County, N. Y. This was shown in grinding. The paper sacks which hold barely 50 lbs. of the fluffy fibrous talc of Gouverneur, N. Y., will hold easily 75 to 90 lb. of the North Carolina talc. A local use for the talc of this region was in the building of chimneys, a few of which may still be seen.

The North Carolina deposits are irregular in extent, quantity, and quality, and in many cases have proved very unfortunate investments. It is true, nevertheless, that no extensive and intelligent explorations have been made to show their character.

In recent years the Atlanta mine has been operated by the Valleytown Mineral Co., a New York company, which leased it on a royalty of $1.75 per ton. Through mismanagement and ignorance the company came to grief, and is now in the hands of a receiver. It was for a while, however, the largest producer of the region, and its figures are valuable as showing the cost of producing talc in

North Carolina. It is estimated now that the mineral can be mined and delivered f. o. b. cars at $2 per ton. Railway transportation to mill (eight miles) costs $1.30 per ton, unloading $0.15, grinding and sacking $2.25, royalty $1.75, loading cars $0.05, freight on 2,000 lb. to New York, $3.44—total $10.94. In New York the product brought $11.75, which did not leave much margin for interest and expensive management.

In talc mining in North Carolina the mineral is shipped to the mill as mined, where any marble and other impurities are carefully sorted out, and the large lumps broken with hammers to about the size of a man's fist. It is ground by passing first through a mill of the same type as is used to grind corn on the cob, from which it goes to a Gillett mill, which has a double set of beaters, four beaters on each side, with about 2 in. between the two sets. These revolve in opposite directions about 2000 revolutions per minute. An exhaust fan sucks out the finest talc to settling chambers wherein the fineness of the settling mineral can be regulated in one way or another. An ordinary automatic flour packer is used for all but the finest grade, which has to be packed by hand. It is sacked in bags holding 200 or 220 lb.

About the same method is used at the Kinsey talc mine, except that there is a Blake crusher instead of the cob-mill, and instead of the Gillett mill another machine of the same general design is employed.

The Hewitt mill has a pencil-cutting plant, and only that mineral which is not suitable for pencils, and the dust produced in sawing the latter, are ground. The talc is cleaned in a revolving screen, then dumped into a car from which it is fed into a buhrstone grinding mill. The ground material is elevated and discharged into a silk bolting-cylinder, the bolted talc is caught in a dust-collecting chamber, into which it is drawn by an interposed centrifugal fan. The fine white talc is finally sent to an automatic packer and filled into sacks holding 220 lb.

THE NEW YORK TALC INDUSTRY IN 1897.

BY C. H. SMYTH, JR.

RECENT developments in the St. Lawrence County talc deposits have shown nothing of particular geological interest. As greater depths are attained no marked changes are noted in either the character or thickness of the talc, and no new varieties of rock are encountered in the mines. In regard to the latter point the writer has made particular inquiry, having in mind the possibility that at any time the talc might be interrupted or entirely cut out by the presence of intrusive rocks. Rocks of this nature, particularly granites and granitoid gneisses, are common all through the region; and there would be no reason for surprise should they be encountered in the workings. But while this possibility exists, and should be kept in mind, it should be clearly stated that there is no special reason why igneous rocks should be looked for at this particular point. It is true that at a short distance north of the mines, at Talcville, a granitoid gneiss occurs, and is probably of igneous origin. But the question of origin is not yet definitely settled, and even if the rock is igneous it probably does not cut the talc at a point sufficiently near the surface to make its presence of any practical moment.

Did the talc occur in veins, pockets, or any other form of secondary cavity-filling, its continuance could not be prophesied with such confidence. But being instead a constituent part of a great sedimentary series, altered by a process that seems to have been very uniform throughout considerable distances, the retention of a constant character to great depths is extremely probable.

The talc industry was much affected by the general business depression and seems rather slow in responding to improved conditions. The output in 1897 was the product of 10 shafts, in which the greatest depth is about 350 ft. Five companies are now in the field: The International Pulp Co.; American Talc Co.; Keller Brothers; United States Talc Co.; and Columbian Talc Co.

The total capacity of existing plants is about 100,000 tons per year, or two and one-half times the average annual output in recent years. In view of these figures it is not surprising that no new mines were opened last year, nor that there was no enlargement of mining plants or mills for grinding. No new finds of talc have been reported, and under existing conditions there is little encouragement for seeking new occurrences. Only a very marked and, at present, unlooked-for increase in the demand for talc can stimulate search for further deposits. So far as can now be judged existing plants will supply all that the market can take for years to come.

The discovery of new uses for this kind of talc may, it is true, greatly increase the demand, but of this there seems little likelihood. Although it has been on the market for a number of years the greater part of the output is still used in the manufacture of paper; and while of late it has been found of service in wood-filling, paint, dynamite, etc., these, and all other applications thus far found, take only a very insignificant percentage of the total output.

TALC AND SOAPSTONE IN VERMONT.

BY GEORGE W. PERRY.

EXTENDING north and south, nearly in the center of the State, is a belt of talcose schist, having a width at the southern end of about four miles, but widening at the north to an extent of more than thirty. At the northern end, however, it is divided into two portions by an outcropping of gneiss, which passes to the west of it in the south and grows wider as the talcose schist narrows. Throughout nearly the whole extent of the schist there are occasional outcroppings of soapstone of varying quality, but in no instance does the deposit appear to be very extensive. These deposits also appear in the adjacent gneiss, which in the south lies on both sides of the schist.

Seventy years ago the soapstone was quarried in more than 25 different localities, the material being used for window-caps and sills, fireplaces and stoves, and for lining the iron furnaces which in those days were found in several Vermont towns. Fifty years ago quarries were in operation in only six different towns, while to-day the industry is confined to two. Strange to say, the deposits now being worked were considered valueless in the earlier days. New uses have come in, and now the soapstone is manufactured largely into sinks and set tubs. Griddles, foot-warmers, boot-driers, and a variety of other small articles are also put on the market. The greater part of the waste is now utilized for many purposes, like paint, mortar, paper filling, foundry facings, etc.

Williams & Co. have a large quarry in the town of Weathersfield. The mills, which are run by water power, are located in the village of Perkinsville. The quarry is operated the year round, and the stone is of excellent quality, lying under 10 ft. of gneiss. It is drawn to the mill, a distance of about one mile, by teams; and the product is hauled five miles to Gassett's Station on the Rutland Railroad for shipment. A portion of the output is shipped in the block, as the concern has another mill in New Hampshire.

The Union Soapstone Co. of Chester Depot controls two quarries in the town of Chester. They are both located about two miles from the village, where the stone is manufactured mostly by steam power. Nearly all of the stock is taken from what is known as the Davis quarry, and is of the very best quality. The Staples quarry has been but little developed as yet, and the material is not, so far, as good. In both cases the soapstone lies under about 15 ft. of gneiss. From both quarries the stone is brought down to the mill by teams. Located in the same place are the works of the American Soapstone Finish Co., which utilizes the waste from the other mill.

The output of soapstone in Vermont in 1897 was 4,000 short tons in the block.

At many points in the outcropping soapstone, talc shows itself in small quantities. Until recently no use of it has been made, except as specimens for cabinets. During the past five years the increased demand for this material has caused much prospecting in the State, resulting in the finding of several very promising deposits, which are now being opened and worked to a limited extent. However, the industry can hardly be said to be established yet.

The New Engand Talc Co. has control of a vein located in Stockbridge. It is found on the summit of a hill whose elevation above the river valley is several hundred feet. The vein runs nearly north and south, and stands almost vertical, with walls of talcose slate, having a varying width of from 2 to 8 ft. A steam engine has been installed, with modern machinery for working the mine. During 1897 a large force was employed with the object of testing fully the value of the deposit. A shaft 100 ft. deep was sunk, from which three levels were run on the course of the vein to a length of about 100 ft. In making this excavation 2,000 tons of marketable talc of different grades were taken out. The company is now sorting and crushing the material on hand, and will ship it to Massachusetts for pulverization and sale. The talc is of excellent quality, and most of it can be taken out with a pick.

In Stockbridge also, about a mile east of the works of the New England Talc Co., is a deposit controlled by the Stockbridge Talc and Soapstone Co. It is an independent vein, having characteristics quite different from the other. Years ago an attempt was made to quarry soapstone at this place, but it was not successful. The deposit is located upon the brow of a hill several hundred feet above the river that runs near-by. During 1897 a cut in the rock was made nearly 200 ft. in length and 15 ft. in depth. Three veins of talc were struck about 10 ft. apart; they run nearly north and south with a dip to the west of 70 or 80°. The rock has evidently been tilted up beyond the perpendicular, so that what appears to be the hanging wall is really the foot wall. The veins vary in width from 3 to 12 ft. The walls inclosing the talc are soapstone in various degrees of purity, giving place at a little distance to gneiss. The talc has been traced to a considerable distance northward, and opened again in a small way at a much lower level. The extent and permanency of the deposit seem to be very promising. Only a few tons have been shipped, but operations on a large scale are to be begun at once in mining, crushing, and marketing the material.

Controlled by the Stockbridge Co. is another deposit of talc in the adjoining town of Rochester. Thirty years ago extensive soapstone quarrying was carried on here, but it has been abandoned for a long time. The tunnel driven by the soapstone company cut across several veins of very fine talc whose value was not understood at the time. These veins run north and south, like the others in this vicinity, and have an inclination of about 80°. They are inclosed in walls of soapstone of fair quality, some of which is dark gray, and some of various tints of red and yellow, due to impregnation with iron and copper. Preparations are making for working both the talc and soapstone.

THE SOAPSTONE DEPOSITS OF VIRGINIA.

Soapstone of good quality exists in Amelia, Albemarle, and some other counties of middle and piedmont Virginia. The veins extend across the State from northeast to southwest. A mine of soapstone was successfully operated in Amelia County, a few miles from the county seat, Amelia. There are two veins in Campbell County, both crossing the James River from Amherst, about 10 miles apart. The western one furnishes stone of a green color, which cuts easily and hardens by exposure. The eastern vein is a very light gray, polishes well, resists heat, and has been used considerably for fireplaces. There are large veins of steatite in Albemarle County, especially at North Garden, which have been operated successfully. The production of soapstone in Virginia was 8,200 short tons in 1896 and 11,874 in 1897. The Albemarle Soapstone Co. of Alberene was the largest producer. Practically the whole of the Virginia production is used for the manufacture of washtubs and similar articles, very little being ground as talc.

TALC IN WYOMING.

A large vein of foliated talc was discovered last year in the mountains northwest of Wheatland in Laramie County. However, its situation is too remote from railway to make it available at present. The vein is said to be very extensive, and the mineral is of good quality, being free from iron and other impurities. It has been opened by a pit 10 ft. deep.

TALC IN EUROPE.

Talc exists in large quantities in the Eastern Alps, the valleys of the Murz, the Liesing, and the Palpenbach, separating the northern calcareous Alps from the central Alps and Styria, the last province being noted for a superior quality of mineral which is now being exported largely. The following analyses were made by Prof. Kludy of the Vienna Technological Museum:

	SiO_2.	MgO.	FeO.	CaO.	H_2O, CO_2, etc.	Al_2O_3.	Na_2O, K_2O.
	Per Cent.	Per Cent.	Per Cent.	Per Cent.	Per Cent.	Per Cent.	Per Cent.
Austrian	59.59	32.92	0.79	0.59	3.79	1.76	0.56
French	50.91	24.86	2.58	1.82	6.64	13.19	....
Italian	51.23	33.32	1.89	1.80	5.46	7.08	0.22

The talc deposits at Luzenac, in the valley of the Arriege in the south of France, were described briefly in THE MINERAL INDUSTRY, Vol. V., where analyses of this mineral and also of the talc from the valley of Pignerolles in Italy were given.

During the last few years the use of talc in Europe as a loading material in the manufacture of paper and for producing a satin-surfaced paper has greatly increased. Although the price of talc is higher than that of kaolin, which is employed for the same purpose, it is said, nevertheless, to pay to use it for high grades of paper where a better finish is required. The surface produced by talc is superior to that obtained by kaolin, and it will absorb printing as well as writing inks.

TELLURIUM.

BY L. M. DENNIS.

A BRIEF description of the methods and apparatus employed in the extraction and preparation of tellurium at Schemnitz, Hungary, was given by D. A. Louis in THE MINERAL INDUSTRY, Vol. V., p. 522.

In 1897 Dr. Richard Pearce presented before the Colorado Scientific Society two papers upon the occurrence of tellurium in Montana and Colorado. He described some rich gold ores from the Mayflower mine in Madison County, Mont. This ore assayed 21.33 oz. gold, and 93.67 oz. silver per ton, while carload lots have gone from 10 to 20 oz. gold per ton. Dr. Pearce found on treating the finely powdered ore with hydrochloric acid that the whole of the ferric oxide present was soluble, and a residue of white silicious material was left undissolved. The soluble portion on treating with an excess of a solution of stannous chloride gave an abundant flocculent precipitate of metallic tellurium, which after weighing indicated a quantity equal to 87.49 oz. per ton. The insoluble portion, after treating with hydrochloric acid, was carefully concentrated by vanning, to get rid of the silicious material as far as possible. The product showed a quantity of fine gold, together with some very brilliant white crystals of what appeared to be sylvanite. The presence of so much silver (unlike the occurrence of Cripple Creek) would tend to prove the existence, at depths below the zone of oxidization, of such materials as hessite or petzite, associated with sylvanite. It may, however, be found that the latter mineral is the only representative of the telluride group present, associated perhaps with rich silver minerals, as in the Dakota occurrence of tellurium, to which Dr. Pearce previously called attention.*

In his second paper Dr. Pearce described a mineral recently discovered by C. A. Martine in the Griffith mine near Georgetown, in Clear Creek County, Colo., which has some mineralogical interest. Mr. Martine found that it contained tellurium, and was led to believe that it might prove to be telluride of silver and gold of an entirely new species. The mineral occurs only in small quantities associated with pyrite, galenite, and chalcopyrite, in a felspathic matrix containing small quantities of magnesite. The color is dark gray, with a bright metallic luster; hardness about 3.

---

* *Engineering and Mining Journal*, Jan. 30, 1897.

An analysis was made by F. C. Knight on carefully selected material, but owing to its intimate association with the minerals named above, it was impossible to obtain the mineral in pure form. The result of the analysis was as follows: Ag, 50.65%; Te, 18.80%; Pb, 9.34%; Cu, 4.65%; Fe, 4.00%; Bi, 1.16%; S, 8.06%; $MgCo_3$, 1.95%; alloy of Au and Ag, 0.48%; insoluble residue, 1.07%; total, 100.16%.

Mr. Pearce describes* the following method for detecting tellurium: In case tellurium is suspected as a telluride, place a minute fragment of the material in a white porcelain dish, and add a drop of concentrated sulphuric acid; heat the acid gently over the flame of a spirit lamp, and if tellurium is present a beautiful carmine color is at once developed. Should the tellurium be associated with other minerals commonly found with gold-bearing ores this test is of little or no value, as these minerals interfere with or conceal the reaction. For the detection of tellurium under such conditions, a sample of the fine pulp may be treated with strong nitric acid in a porcelain dish, and heat applied until the material is perfectly oxidized; strong sulphuric acid is then added and heat applied until the excess of nitric acid is expelled, or until copious fumes of sulphuric acid are given off. When cold, hydrochloric acid and water are added in about equal proportions, then filtered, and the clear filtered solution is treated with stannous chloride, precisely as in the case of oxidized tellurium ores.

Concerning the purification of crude tellurium, E. Priwoznik states that if sulphur dioxide is led into a hydrochloric acid solution of tellurium dioxide, only a part of the tellurium is precipitated. The remainder separates only when the solution is highly diluted. If the solution be fractionally precipitated with sulphur dioxide the tellurium can be obtained completely free from other elements. To remove any sulphur or selenium that might be present the tellurium is heated in a current of hydrogen.†

The Geological Survey of New South Wales says that at Tarana telluride of bismuth was first noticed by E. C. Whittel, field assistant, at Mitchell & Party's claim, near Slippery Creek. It occurs with free gold in small grains and flakes in the quartz, and is associated with greenish and yellow alteration products. The telluride is probably auriferous. A similar mineral has recently been found, also associated with free gold, in a white quartz from Kentucky Run, near Uralla. Telluride of bismuth has been previously recorded from Captain's Flat, Molonglo, and from Moor Creek, Tamworth.

In connection with this subject reference should be made to the elaborate paper on "The Geological Occurrence and Associates of Telluride Ores," by Prof. J. F. Kemp, in the division "Gold and Silver" of this volume.

---

* *Engineering and Mining Journal*, April 17, 1897.

† *Oesterr. Zeits. Berg- und Hütten.*, Vol. XLV., p. 219.

TIN.

THERE was no production of tin in the United States in 1897 and so far as we are aware no prospecting for tin ores. The production of tin in Mexico was insignificant and there are no longer any American companies engaged in the exploitation of tin mines in that republic. There was a considerable increase in the tin production of Bolivia. The output of. tin in Banka and Billiton also increased, while in the Straits Settlements, Australia, and England there was a falling off. Consumption in Europe was not so large as was expected. In the United States, however, there was a material increase, owing to the further expansion of the tin-plate industry, which has made such rapid strides that by far the larger part of the tin-plate consumption of the country is now being supplied by home manufacturers. The statistics of the production and consumption of tin are summarized in the subjoined tables.

The most important feature in connection with the tin industry in 1897 was the continued growth of tin-plate manufacture in the United States. While the exportation of tin plates from the United Kingdom to America fell off from 222,901 long tons in 1895 to 113,051 in 1896, and 85,475 in 1897, the manufacture in the United States increased from 127,305 short tons in 1895 to 179,605 in 1896, and 126,287 in the first six months of 1897. Probably the total make in 1897 was considerably upward of 250,000 short tons. A noteworthy feature last year was that the entire product was made from American black plates. It goes without saying that the remarkable growth of this industry in America has largely upset the business in England.

There have been important reductions in the cost of making tin plate in the United States during the last two years, amounting to probably over $10 a ton on an average. This has been effected by changes in management, methods and machinery, and there is scarcely a department in the tin plate works wherein innovations have not been introduced. The notable exception to this is the hot rolling mill, where practically the same old method is pursued, and the cost of labor is said to have actually increased, though thanks to better management and better rolls the expense entailed by roll breakage is much less than it was. American manufacturers have generally adopted the single stand of hot rolls and claim that they are more substantially built and are heavier than those of other manufacturers. The rolls used are from 22 to 24 in. in diameter with necks of from 18 to 19 in. Nearly all packs are rolled 20×56 in. and cut in two to make 20×28 in.

IMPORTS OF TIN INTO THE UNITED STATES.

Year.	Pounds.	Value.	Year.	Pounds.	Value.	Year.	Pounds.	Value.
1892........	46,821,958	$9,415,889	1894.......	39,268,628	$5,944,065	1896.......	44,639,394	$5,848,933
1893........	40,184,556	8,007,292	1895.......	54,252,045	7,405,619	1897.......	55,172,571	7,415,938

PRODUCTION OF TIN IN THE WORLD. (*r*)

Year.	Australia. (*a*)			Austria. (*b*)			Banka and Billiton. (*c*)	Bolivia. (*d*)	England. (*e*)			Germany. (*f*)		
	Met. Tons.	Value. (*s*)	Per M Ton.	Met. Tons.	Value. (*s*)	Per M Ton.	Metric Tons.	Metric Tons.	Met. Tons.	Value. (*s*)	Per M Ton.	Met. Tons.	Value. (*s*)	Per M Ton.
1892..	3,305	$1,507,705	$456	72	$40,888	$568	12,050	2,864	9,419	$4,478,765	$475	684	$309,973	$453
1893..	2,679	1,115,695	416	66	36,824	558	10,877	2,956	9,124	3,928,705	431	951	348,135	365
1894..	2,653	897,225	338	80	38,812	485	10,527	3,598	8,461	3,022,500	357	896	271,804	303
1895..	2,235	680,400	304	60	24,257	404	10,932	4,166	6,755	2,238,900	331	884	266,292	301
1896..	1,737	496,060	286	54	18,260	341	11,968	3,890	4,915	1,538,390	313	459	135,784	296

Year.	India (*g*)	Japan. (*h*)	Mexico. (*j*)	Portugal. (*k*)	Russia. (*l*)			Singkep. (*m*)	Straits Settlements. (*o*)	Tasmania. (*p*)			United States. (*q*)			Total Met. Tons.
	Met. Tons	Met. Tons	Met. Tons.	Met. Tons.	Met. Tons.	Value (*s*)	Per M Ton.	Met. Tons.	Met. Tons.	Met. Tons.	Value. (*s*)	Per M Ton.	Met. Tons.	Value. (*s*)	Per M Ton.	
1892..	70	41	*Nil.*	18	9	$3,520	$391	86	38,708	3,246	$1,453,970	$448	65	$29,837	$459	70,637
1893..	66	39	19	53	7	2,501	357	170	44,658	3,179	1,301,095	409	*Nil.*	......	......	74,844
1894..	100	39	42	26	4	1,440	360	265	51,100	3,195	1,348,000	422	*Nil.*	......	......	80,926
1895..	22	48	39	(*t*)	21	5,068	241	654	53,854	4,265	1,301,350	305	*Nil.*	......	......	83,435
1896..	83	(*t*)	5	(*t*)	(*t*)	......	......	852	53,964	3,867	804,395	208	*Nil.*	......	......	81,789

(*a*) From *Report of Secretary of Mines and Agriculture of New South Wales*, which is the only Australian colony that produces metallic tin. Tin ore is also exported from New South Wales. Tin ore is produced in Victoria, Queensland, South Australia, and Western Australia, but its metal contents are reported in the productions of other countries.

(*b*) From the *Statistisches Jahrbuch des K. K. Ackerbau-Ministeriums*. The tin production of Austria is derived partly from domestic ores, and partly from Bolivian ores and impure tin from the East imported for refining.

(*c*) Total sales in Holland and Java as reported by William Sargant & Co.

(*d*) Exports of tin and tin in ore from Bolivia to England. Some of this tin may be produced in Peru. It is all exported through Peruvian and Chilean ports.

(*e*) From *Mineral Statistics of the United Kingdom*. These figures give the amount of tin estimated to be obtainable in smelting the ore of domestic production. They differ considerably from the figures used by William Sargant & Co., which are possibly obtained directly from the smelters.

(*f*) From *Vierteljahrs und Monatshefte zur Statistik des Deutschen Reichs*. By far the larger part of this production is from Bolivian ores.

(*g*) The figures for 1891-93 are by M. H. Warth, from the *Review of Mineral Production in India*. Those for 1894-96 are from official returns by the Department of Revenue and Agriculture, Calcutta.

(*h*) From the *Resumé Statistique de l'Empire du Japon*.

(*j*) According to export returns. Small amounts produced by natives for domestic consumption are not included.

(*k*) From official returns furnished by the Portuguese Government to the *General Report Upon the Mineral Industry of the United Kingdom*, 1895.

(*l*) From Russian official reports.

(*m*) The figures for 1891-93 are for fiscal years, as reported by O. H. Van der Wyck in *Mineral Resources of the United States* for 1895; the figures for subsequent years represent sales in Holland, reported by De Mouchy & Havelaar and W. Sargant & Co.

(*o*) Shipments from the Straits to Europe and America, as reported by William Sargant & Co., and to India and China by Boustead & Co., except the figure for 1896, which is taken from the *Report of the Governor of the Straits Settlements*.

(*p*) From *Report of the Secretary of Mines*.

(*q*) From reports by the sole producer to THE MINERAL INDUSTRY.

(*r*) It will be observed that this table differs from the statistics usually referred to for the world's production of tin, namely, those of William Sargant & Co., and of the *Metallgesellschaft Frankfurt am Main*. This is because (1) they reckon Australian shipments to Europe and America instead of the Australian production, whereby a good deal of Australian tin consumed at home is not included; (2) shipments from the Straits to India and China and the production of several minor countries are not included. A small amount of tin produced in Spain is necessarily omitted, owing to the absence of statistics for that country.

(*s*) In cases where the statistics in the above table have been taken from official sources, wherein values of product have been stated, a calculation of unit values has been made. This developed some amazing differences, which are undoubtedly due to making value calculations at different stages of the product; *i.e.*, more or less cost of carriage is included. Statisticians should agree upon a uniform system for this class of work.

(*t*) Statistics not yet published.

THE PRINCIPAL TIN SUPPLIES OF THE WORLD. (*a*)

(In long tons.)

	1891.	1892.	1893.	1894.	1895.	1896.	1897.
English production	9,353	9,270	8,837	8,328	6,648	4,837	4,500
Straits' shipments to Europe and America	31,457	34,648	39,670	45,640	47,840	47,180	41,700
Australian shipments to Europe and America	5,991	5,972	5,579	5,824	4,992	4,320	3,466
Banka sales in Holland	5,350	6,300	5,244	5,626	6,221	6,735	8,900
Sales of Singkep in Holland	*Nil.*	*Nil.*	*Nil.*	261	644	839	800
Billiton sales in Java and Holland	5,753	5,560	5,462	4,735	4,539	5,040	5,100
Bolivian arrivals on Continent	....	....	....	....	....	210	1,208
Bolivian arrivals in England	1,559	2,819	2,909	3,482	4,097	3,829	4,298
Straits shipments to India and China	4,085	3,450	4,285	4,655	4,674	6,118	3,200
Totals in long tons	63,548	68,019	71,986	78,551	79,655	79,108	73,172
Totals in metric tons	64,565	69,107	73,138	79,808	80,930	80,374	74,343

(*a*) This table is based on the statistics compiled by William Sargant & Co., but the figures of English production are taken from the *British Blue-Book*, except for 1897, where Sargant's have been used. The Straits shipments to India and China are as reported by Messrs. Boustead & Co. This table does not include the production of Germany, Austria, Spain, Portugal, and various other countries.

CONSUMPTION AND STOCKS OF TIN IN ENGLAND, AMERICA, AND HOLLAND. (*a*)

(In long tons.)

	1892.	1893.	1894.	1895.	1896.	1897.
Consumption—						
Deliveries from London after deducting all shipments to America	14,122	18,663	18,050	17,222	19,015	17,118
Deliveries from Holland after deducting exports to London and America	8,789	7,853	8,207	9,029	10,150	11,680
English consumed at home	2,772	1,473	2,314	938	5,000	4,400
Exports of English, minus quantity shipped to America	5,648	6,554	5,686	5,530		
American consumption of all sorts	18,750	19,000	16,650	22,500	20,500	22,500
Billiton sent to other ports than Holland	2,605	1,919	862	1,582	1,603	1,370
Straits direct to Continent, less re-exports to America and England	5,500	8,900	11,725	7,622	11,400	9,170
Bolivian delivered from Liverpool	2,656	2,704	3,323	4,099	4,071	3,838
Bolivian delivered from Continent	....	....	....	....	210	1,208
Totals	60,842	67,066	66,817	68,522	71,949	71,284
Stocks, Dec. 31—						
Stock of foreign in London	2,776	4,392	8,985	13,539	18,097	15,146
Foreign landing in London	1,346	817	1,189	1,025	1,174	673
Straits afloat for London, including wire advices	2,170	3,470	3,778	2,825	2,792	2,500
Australian afloat for London, including wire advices	957	909	650	825	525	600
Banka on warrants in Holland	868	319	1,006	1,154	1,616	2,877
Billiton in Holland	326	640	1,632	1,507	1,638	1,328
Billiton afloat for Holland	1,240	1,600	1,129	1,097	1,742	1,193
Straits stock in Holland	190	670	767	277	789	377
Bolivian in Liverpool	220	335	494	492	250	710
Total stocks	10,093	13,152	19,630	22,741	28,623	25,404
Estimated stock in America and quantity floating	5,492	2,730	3,820	6,823	2,925	4,500
Grand totals	15,585	15,882	23,450	29,564	32,548	29,904
Trading Company's reserves of unsold Banka stock in Holland	3,480	4,200	5,770	6,140	5,953	4,333
Floating for Holland	139	....	....	....	....	....

(*a*) From the annual metal circular of William Sargant & Sons.

PRODUCTION OF TIN AND TERNE PLATES IN THE UNITED STATES. (*a*)

Year.	Tin Plates.			Terne Plates.			Tin and Terne Plates, Aggregate Production.	Amount Made From—		
	Lighter Than 63 Lb. Per 100 Sq. Ft.	63 Lb. Per 100 Sq. Ft. and Heavier.	Totals.	Lighter Than 63 Lb. Per 100 Sq. Ft.	63 Lb. Per 100 Sq. Ft. and Heavier.	Totals.		American Black Plates.	Foreign Black Plates.	Totals.
	Lbs. Net.	Lbs. Net.	Lbs. Net.	Lbs. Net.	Lbs. Net.	Lbs. Net.	Lbs. Net.	Lbs. Net.	Lbs. Net.	Lbs. Net.
1891 (*b*)	316,370	52,030	368,400	1,489,431	378,912	1,868,343	2,236,743	1,986,208	250,535	2,236,743
1892	12,427,100	1,494,187	13,921,296	26,263,709	1,934,187	28,197,896	41,219,192	21,273,876	20,845,316	42,119,192
1893	60,966,664	3,569,545	64,536,209	57,009,255	2,091,243	59,070,498	123,606,707	54,337,889	69,268,818	123,606,707
1894	92,545,767	9,677,640	102,223,407	59,112,904	5,007,098	64,120,002	166,343,409	119,667,483	46,675,926	166,343,409
1895	142,792,405	23,135,502	165,927,907	75,972,787	12,710,701	88,683,488	252,611,395	241,316,527	13,294,868	254,611,395
1896	231,503,234	38,848,551	270,351,785	89,643,346	9,414,667	99,058,013	359,209,798	358,212,482	997,316	359,209,798
1897 (*c*)	176,639,504	26,388,754	202,028,258	45,743,898	3,801,745	49,545,643	252,573,901	252,573,901	*None.*	252,573,901

(*a*) From the *Special Report to the Secretary of the Treasury*, by Ira Ayer; for calendar years except where specified otherwise. (*b*) July 1 to Dec. 31. (*c*) First six months.

EXPORTS OF TIN PLATES FROM THE UNITED KINGDOM.

(In tons of 2,240 lb.)

	1891.	1892.	1893.	1894.	1895.	1896.	1897.
To the United States........	325,145	278,479	255,583	226,880	222,901	113,051	85,475
To other countries...........	123,587	117,101	123,650	127,048	143,081	153,904	186,434
Totals....................	448,732	395,580	379,233	353,928	365,982	266,955	271,909

Banka.—According to the official Colonial Report the production of Banka tin in 1896 was 10,245 long tons against 7,849 long tons in 1895.

Describing the occurrence of tin in Banka and Billiton, Vorbeek stated, in a paper read before the Amsterdam Academy, that the geological formation of the two islands is the same. Thick Palæozoic beds are traversed and altered by granite, and are covered by horizontal beds of sand and clay of recent age, while the lower strata of the valleys, which contain the tin ore, are apparently of Pliocene age. The granite contains very little tin. The tin ore occurs in very narrow veins in the sedimentary rocks, and appears to have been formed subsequently to the cooling of the granite. The eroded portions of the veins must have been much larger, for in the sand huge crystalline blocks of ore up to a ton in weight are met with. Minerals containing fluorine, such as topaz and tourmaline, are comparatively rare, and fluorspar is entirely absent. The ore in the valleys rests immediately on the granite, or on the sedimentary rocks, and is covered by sand and clay beds, which in Banka are 52 ft. in thickness, and in Billiton 36 ft. After this covering is removed, the layer of ore, which is 1 to 3 ft. in thickness, is excavated. It is composed chiefly of quartz particles and tin ore grains.

Vorbeek is also authority for the statement* that the duration of the tin deposits of Banka and Billiton is limited. Up to the present time Banka has produced 7,000,000 piculs of tin, and the existing supply amounts to only about 3,000,000. The exportation during the last ten years has averaged about 100,000 piculs per annum. In Billiton the ore deposits opened show only 300,000 piculs, while the exportation is going forward at the rate of 80,000 piculs.

Bolivia.—The tin deposits of this county have been described by Prof. A. W. Stelzner (now deceased) in an elaborate monograph: "Die Silber-Zinnerzlagerstätten Bolivias; Ein Beitrag zur Naturgeschichte des Zinnerzes," (*Sonderabdruck aus der Zeitschrift der Deutschen geologischen Gesellschaft*, Bd. XLIX., Heft 1, 1897).

England.—Further progress has been made in the introduction of modern methods of mining and ore dressing in Cornwall, especially at the Dolcoath mine. A recent report of the company shows specifically what has been accomplished by the improvements already introduced. In the dressing works 28,717 long tons of ore were crushed and washed during the six months ending December 1, 1895, at a cost for labor of £3,605, or 30.12d. per ton; in the six months ending June 30, 1897, there were treated 35,879 tons at a cost of

---

* *Zeits. Prakt. Geologie*, 1897, p. 428.

£3,473, or 23.23d.; this saving in labor is about 23%. Other improvements are now being carried out which will effect a still further reduction in cost in this department. The result of the various improvements at the mine has been to reduce the total cost per ton from 27s. 6d. to 22s. 1.5d. for the same half-years mentioned above, this saving amounting to 19.5%. These economies have, of course, increased the quantity of ore which can be worked at a profit, and it is now estimated that at the present price of tin the reserves of payable ore amount to about 135,000 tons.

Singkep.—It is stated that hereafter the Singkep tin production will be sent to Singapore to be smelted, and will probably be sold there as part of the Straits output. Heretofore this tin has been sold at the Banka sales in Holland. The mines, which first began to produce in 1895, are on the island of Singkep, which is in the territory of the Sultan of Lingga, a native ruler under Dutch protectorate. The output is handled by the Singkep Tin Co., which has its headquarters in Holland.

Spain and Portugal.—According to a recent report of the U. S. Consul at Corunna tin ore has been worked considerably in Galicia during late years. There is a wide belt of tin-bearing formation which runs from Zamora through a corner of Portugal, through the Province of Orense, and from there through Santiago up to the coast, nearly 250 miles. The mines are worked under considerable difficulties as they are situated for the most part in remote districts, and for want of means of communication the ore, as a rule shipped to Havre, has to be transported by mules to the nearest railway station.

Straits Settlements.—Frank Owen read a paper on "Tin Mining in Perak" before the Institution of Mining and Metallurgy, November 17, 1897, of which the following is an abstract: The export duty on metallic tin in Perak in 1895 was $12.50 per bharra of 3 piculs, the picul being 133.3 lb. August 1, 1896, it was reduced to $12 per bharra, and November 1, 1896, it was further reduced to $11. This was done at the petition of the Chinese miners, who alleged that otherwise they could not make their mines pay. For the purpose of collecting duty black is estimated as containing 65% metal. As a matter of fact in Perak it generally contains from 68 to 72%.

The total production of tin in Perak in 1891 was 14,067 long tons, in 1892 16,149, in 1893 18,377, in 1894 21,657, in 1895 21,356. This increase in production has been made in the face of a decline in the value of tin from £93 9s. 6d. in 1892 to £63 6s. 8d. in 1895, these being London prices. The prices of Straits tin in Singapore in 1891 was $32.27. The annual average in subsequent years was $37.39, $37.86, $38.03, $35.05. The average rate of exchange for the Straits dollar during the same year in pence was as follows: 38.37, 33.95, 30.02, 25.09, 25.08.

The more part of the tin production of Perak is obtained from the Kinta district; about two-thirds are smelted in the district and the remainder is contained in black tin which is shipped to Singapore for smelting. Next in importance is Larut, where the entire output is smelted in the district. The other districts of Perak are insignificant as tin producers.

The Kinta district extends from the watersheds of the Kinta River right across the valley of the same. Its length is about 40 miles and width about 25 miles. It has been officially calculated that 30,000 acres of tin-bearing ground have been worked out with a further 10,000 acres in course of exhaustion. The country rock is granite, which in many cases forms the bed rock of the tin-bearing gravel. It is not infrequently altered into kaolin and in this form often has tin disseminated through it. In most places a limestone formation overlies the granite.

The tin-bearing deposits occur in three distinct forms: (1) Surface alluvial, carrying payable tin from the grass roots down. This class of deposit seldom exceeds 15 ft. in depth; (2) shallow alluvial, where the tin-bearing gravel, usually 10 to 20 ft. deep, lies under 15 to 20 ft. of overburden. This is the usual form of deposit in Perak. Sometimes there are two layers of wash dirt with 10 to 20 ft. of barren gravel intervening; (3) deep leads with 30 to 50 ft. of overburden. These are worked either by open cast or by shafts and a regular system of underground mining.

A good example of the method of working surface alluvial exists in the practice of the Leh Chin Mining Co., Ltd., at Changkat Pari, Ipoh, which works a mine 277 acres in extent. The system adopted is leasing for short terms to Chinese, of whom about 600 are employed. The coolies dig the gravel with hoes and carry it in baskets to the sluices. At the average rate of wages of 40c. (10.5d.) per day, the cost of carrying gravel by this method to the sluice-box 50 ft. away is only 2.5c. (0.75d.) per long ton.

The gravel is washed in a sluice-box shaped something like a coffin, widening out in the center and narrowing again toward the bottom. Its length is 9 ft., width at the top 1 ft., at the bottom 1 ft. 3 in., and extreme width 2 ft. 6 in. It has an inclination of 1 in 10. With such a sluice 50 cu. yards, or say 100 tons of gravel can be washed in six hours if the ground be fairly loose. Except with very rich ore the loss of tin does not exceed 3% and it is not often that it pays to rewash tailings.

The working of shallow alluvials and deep leads is carried out in the same manner. The overburden is stripped by contract at so much per "chiang," which is fixed at 30 × 30 × 1.5 ft., *i.e.*, 50 cu. yards. The average cost is 8 to 14c. (2d. to 3.75d.) per cu. yard. The men at work on the tin-bearing gravel are paid either by the day or according to the amount of clean tin ore produced. The gravel consists chiefly of crystalline quartz, with some feldspar, the bed rock being granite or limestone.

When the overburden is too deep for open-cast working underground mining is resorted to. If the ground is clay, or other material that will stand, the shafts are circular, 3 ft. in diameter. In running ground they are 3 ft. square and are timbered with 1 in. laths. One mine will have twelve or more of such shafts laid out in straight lines and at right angles to one another, 18 to 20 ft. apart. Underground shafts communicate with one another by drifts, the average size of which at commencement of extraction of wash dirt is 4×3 ft. The roof is supported at intervals of 3 or 4 ft. by single props with semi-oval slabs at top and bottom.

With workings on a large scale a sluice-box of the same type and inclination as that previously described is used, but it is larger, being 25 ft. long, 1 ft. 6 in. wide at the upper end, 4 ft. wide at 5 ft. from the upper end, and 2 ft. wide at the tail end. The black tin collected at the clean-up is jigged by hand on 40-mesh sieves, 1 ft. in diameter and 3 in. deep. If carefully done with fairly good ore a concentrate assaying from 68 to 73% tin will be produced.

Most Europeans connected with tin mining in Perak sell their product to the Straits Trading Co. of Singapore, which is the only European buyer in the East, and has agencies at the various mining centers throughout the native States. Many Chinese miners are also interested in smelting works to which they send their own tin. The Chinese smelters handle over three-fourths of the entire production of Perak.

When the ore received by the European buyers is dirty it is rewashed in a sluice-box before shipment to the smelting works. The company does not care to handle ore unless it can be rewashed so as to run at least 63% tin. In Selangor, where the average product is of higher grade than in Perak, sometimes assaying 76%, while 73 and 74% are not uncommon, the company discourages all but large sellers to bring anything but very clean ore.

There are two alluvial tin mines in Perak worked by hydraulicking: the Bruseh mine in the Batang Padang district and the Gopeng mine in the Kinta district. The former has ground which is tin bearing from the surface down to a depth of 20 ft., with an average yield of 2.6 to 6.5 lb. black tin per cu. yard. The latter has a deposit of gravel 12 ft. deep which yields 2.6 lb. per cu. yard.

In the Batang Padang district of Perak gold is frequently found in the tin alluvial. It is washed out of the clean black tin with a "dulang" which is a wooden dish similar in shape and size to the South American "batea." One of the richest tin mines for gold yields gold to the amount of 6 oz. 18 dwt. 14 grains per ton of black tin. The crude gravel containing about 2.6 lb. of tin per cu. yard, it may be assumed to run 3.84 grains of gold per ton. The Batang Padang district is also the only one in Perak where wolfram is found associated with the tin in any considerable quantity.

All reports to the contrary notwithstanding no true tin lodes have yet been discovered in Perak. In most instances the so-called lodes have proved to be small gash veins with no permanency in depth. The last lode mining enterprise in the State, the Malacca Tin Mining Co., Ltd., closed down its mine near Ipoh in 1896. A stock work deposit, however, has been found under the wash dirt at a mine near Ipoh, and a similar deposit is now being worked at Kuchai in Selangor by the Malay States Tin Mining Co., Ltd.

Land tenure in Perak for mining as well as for agricultural purposes is granted under lease for 21 years at $1 per acre per year. The leaseholder is entitled to the water rights and timber on his land. At the expiration of the first year of working, one coolie must be employed per acre; and any machinery erected or water power developed is reckoned as equivalent to 8 coolies per unit of horse power developed. Each owner or lessee of a mine must take out a mining license every six months, for which he pays $5.

Samples of tin gravel from the neighborhood of Taiping taken by the State geologist from certain Chinese mines about two years ago, averaged

14.972 lb. black tin per cu. yard. The average throughout the State is nothing like so high as this at the present time, however, from 2.6 to 5.2 lb. probably comprising the true figure. It is probably not far out to say that 1.3 lb. of black tin per cu. yard represents the limit of payable wash dirt with an average alluvial mine in Perak at present rates.

As to the future of tin mining in Perak there is no doubt that there exists an immense reserve of alluvial tin. Although many of the richer and more easily worked deposits have been exhausted, there must still remain large tracts of good tin-bearing land covered with dense jungle. Both in Perak and in the other Malay states a considerable proportion of the land under cultivation for coffee and other crops is known to be tin-bearing.

It is the general opinion that a further considerable drop in the price of tin will be met principally by a reduction in the wages paid to the Chinese coolies, which are now considerably higher than were paid in the early days of Perak mining and are about double what the coolie could earn at agriculture or any other form of unskilled manual labor. The consensus of expert opinion in Malaya, however, seems to be that with tin at less than £53 few of the mines in Perak, except those situated very favorably, could be worked at a profit.

According to the report of the Commissioner of Lands and Mines of Perak, the output of tin in 1896 was diminished by two causes, the lower price of the metal and unusually heavy rains. The total weight of metallic tin on which duty was received by government, ore being reckoned as containing 65% of metal, amounted to 383,226 piculs (22,754 tons), being less by 17,720 piculs, or 1,052 tons, than the corresponding figures for 1895. The decrease was chiefly in the weight of ore, which may be partly accounted for by the Straits Trading Co. having called in some of its advances in the Kinta district, the principal scene of its operations. This company is the only European smelting firm in this part of the world. To entirely prohibit charcoal burning, as has been advocated, and to shut down the Chinese smelting *kongsis*, would create a monopoly for this one smelting company and, since it declines to deal with the lower and more refractory grades of ore, there would be no market for such ores. The value of tin exported in 1896 was $12,339,877, being $1,713,630 less than the value of the 1895 export. The duty collected was $1,541,052, being $128,038 less than the amount collected in 1896. Owing to the low price prevailing the government reduced the rate of export duty during the second half of the year. Taking the year through, the duty was equivalent to 12.94%.

Swaziland.—According to *British Consular Report* No. 1996, Annual Series, the Ryan Tin Co. did a good deal of work in 1896, and in the first six months produced upward of 260 tons of black tin, valued at £45 per ton. During the second half of the year development work was vigorously carried on, and about 20,000 tons of tin-bearing gravel was exposed. Machinery for treating this has been erected. Some tin lodes have also been discovered and further prospecting is in progress. The great drawback to working the tin and coal deposits of this territory is lack of transportation facilities.

Tasmania.—The export of tin from Tasmania in 1897 amounted to 2,354 long tons, against 2,700 tons in 1896. The output of the Mt. Bischoff mine was well maintained. The company continues to pay regular monthly dividends, and up to June 30, 1897, it had distributed £1,465,000. Very little tin has been produced in this district this year, however, outside of the big mine. In the Northeastern district the output of alluvial tin ore was less than usual, owing to the scarcity of water and the lower price of the metal. Other extensive deposits are known to exist, however, and under favorable conditions the output will increase. Scarcity of water also affected the production of alluvial tin ore in the Eastern district. But large plants are now being erected there to work the tin lodes of the Blue Tier field on a large scale.

The Commissioner of Mines for the Northeastern district reports that so long as the price of tin keeps at the present figure, he cannot look for any improvement in the industry in that district, though with a moderate advance there would be a revival of prosperity, since there are extensive areas of tin-bearing gravel of moderate richness which have not yet been exploited.

In the Eastern district the Anchor Tin Mining Co. is making preparations to work the Anchor lode on a very extensive scale. It is building a mill with 200 head of stamps, which it was expected would be ready for operation about the end of the year. A 20-stamp mill is to be erected on the Liberator mine, situated not far from the Anchor, and the mill of the Australian mine is to be reconstructed. There are large bodies of low-grade tin ore in this district and the three companies which are engaged in their exploitation will demonstrate whether they can be made to pay by the aid of modern machinery. The Anchor Tin Mining Co. has an extensive tin-bearing dike in granite which is thought to average about 1% black tin.

The production of the Mt. Bischoff Tin Mining Co. in the first half of 1897 was 1,186.2 long tons, which was smelted from 1,723.25 tons of ore, of which 572 tons, yielding 400 tons of metal, were purchased from small producers. The cost of mining and dressing was 6s. 7.5d. per ton, which was 7.18d. per ton more than in the previous half-year. The cost of crushing and dressing was 1s. 1.33d. per ton. The average assay of the refined tin was 99.86%, and of the slag 5.3%.

THE TIN MARKETS IN 1897.

New York.—Fluctuations during 1897 were not large in the New York market. The lowest price was recorded at the beginning, when 13⅛c. was accepted. After that a moderate improvement set in, which carried prices up to 13¾c. by the end of January, followed by a decline of about ¼c. to ½c.; these prices ruled until the middle of June, when there was a marked scarcity of spot tin in the New York market. Deliveries for consumption were made at such a rate that the supplies were for some time inadequate, and repeatedly premiums amounting to ¼c. per lb., and sometimes even more, were paid for tin for immediate delivery. The beginning of July found prices up to 14⅛c., but when heavier supplies came in values slowly receded to a point more in harmony with the quotations ruling in the English market. By the end of

August 13⅝c. to 13¾c. was established, which price ruled firm and steady almost to the end of the year.

It will thus be seen that the range of prices was within 1c. per lb., the lowest figure, 13⅛c., being recorded early in January, and the highest, 14⅛c., at the end of June. Or if we deduct the premium which was then paid for spot delivery, ¼c., the range of values did not exceed ¾c. per lb. during the entire year. This compares very favorably with the large fluctuations which the metal has in the past been so often subjected to.

Independently of the experience of last year, it is safe to say that in the future tin will be influenced by the rise and fall of silver as in the past, so long as the currency question in the East remains unsettled.

AVERAGE MONTHLY PRICES OF TIN IN NEW YORK.

Year.	Jan.	Feb.	Mar.	April	May.	June.	July.	Aug.	Sept.	Oct.	Nov.	Dec.	Year
	Cts.	Cts.	Cts.	Cts.	Cts.	Cts.	Cts.	Cts.	Cts.	Cts.	Cts.	Cts.	Cts.
1892	20.50	20.00	20.25	20.50	20.80	22.00	21.00	20.50	20.35	20.50	20.80	20.00	20.60
1893	19.99	20.30	20.71	20.81	19.96	19.76	19.15	18.81	20.14	20.84	20.61	20.67	20.15
1894	20.16	19.60	19.09	19.75	20.21	19.75	19.22	19.22	16.27	15.35	14.56	13.81	18.08
1895	13.25	13.35	13.20	14.00	14.65	14.15	14.40	14.35	14.45	14.65	14.40	13.91	14.05
1896	13.02	13.44	13.30	13.34	13.54	13.59	13.68	13.49	13.15	12.94	13.09	12.96	13.29
1897	13.44	13.59	13.43	13.34	13.44	13.77	13.89	13.80	13.98	13.88	13.79	13.71	13.67

London.—The feature of the London tin market in 1897 was the improved statistical position of the metal consumption, stimulated by the reduced values having at length outstripped production, upon which, of course, the lower prices had a restrictive effect. The figures published early in January showed stock in and afloat to Europe to amount to about 28,700 tons, or practically the same as at the end of November, and the market opened in fairly firm tendency, with business in spot Straits at £58 2s. 6d. @ £58 10s., with three months at about 15s. @ 17s. 6d. premium, and best brands of Australian at 28s. 9d. per ton. Despite a certain dullness in the American market, a good deal of speculative interest was displayed in London, and as consumptive demand, particularly from tin-plate makers, covering their needs for the next few months, was also active, the market continued to improve, £63 being eventually paid for spot cash and £63 12s. 6d. for three months. These figures marked the summit of the movement, and the month of February witnessed a reaction, following on the subsidence of consumptive demand and influenced by anticipated heavy shipments from the Straits, as well as by the unsettled state of political affairs, and by the absence of demand from America. The first week saw a drop to £61 1s. 3d., followed by a recovery to £62 13s. spot Straits; the next day brought a drop of 20s. and £60 5s. was very quickly reached, this being followed by a rally to £61 15s. The close was quiet at £61 2s. 6d. spot and £61 15s., three months.

Consumption was better in March, but speculation was still checked by political troubles, and the market was also adversely affected by the fall in silver, from 29¾d. to 28 $\frac{5}{16}$d. Sales being pressed, values gave way and £59 for spot closed the month, a fall of over £2 per ton. The figures of supply for March showing a decrease of 1,200 tons, stimulated the market early in April, and an advance to £60 6s. 3d. occurred, followed by a relapse to £59 10s., owing to sellers coming out at the higher level; but the close was firmer again at £60 7s. 6d. spot, with three months at 8s. 9d. premium. Despite a further improvement of over 1,100 tons in the statistics, May opened with a decline to £59 12s. 6d., but a good demand setting in sent values up again to £61 12s. 6d. Subsequent fluctuations were between £61 12s. 6d. and £61 2s. 5d. with £61 10s. the closing figure.

June opened easier, upon bad statistics for May, and down to £60 15s. for cash Straits was taken; but the more encouraging aspect of political affairs and the lessened shipments from the Straits, coupled with the improved position of silver, stimulated the market, and there was a steady rise in values, £63 10s. being ultimately attained, though the close was about 10s. lower.

The tendency during the first fortnight of July was, on the whole, downward, but a fall to £62 5s. was succeeded by a rally to £62 13s. 9d. Just before the month closed, the heavy drop in silver to 26⅜d. per oz., led to considerable realizations as well as bear sales of tin, and a drop to £61 5s. was the result. A slight rally in silver, however, was promptly reflected in the price of Straits tin, which closed at £61 18s. 9d. spot, with three months at £62 8s. 9d.

The month of August witnessed a further collapse in silver, 23¾d. being ultimately reached, and this prevented the good statistical position of tin from having its due effect on values, so that £61 2s. 6d. was accepted for spot and Straits early in the month; but the second week brought a recovery to £62 1s. 3d. Later on the slump in silver sent tin values back again, and, after various fluctuations, £61 was touched at the beginning of September for prompt Straits, three months commanding a premium of about 10s. per ton.

In September there was a good consumptive demand from the United States and the continent, and, as shipments were inconsiderable, the market improved until £62 5s. was realized for spot cash. The firmer silver values also assisted tin, but the latter article was affected by the subsequent relapse in the former, and the close was easier at £61 18s. 9d. spot.

October was a month of dull trade, generally speaking, but tin was in fair demand, and with good statistics and firmer silver values there was, on the whole, a satisfactory tone in the tin market, and prices improved to £63 3s. 9d. spot; Straits closing, however, quieter at £62 11s. 3d., with three months 11s. 3d. higher. The big engineering strike was still unsettled, and to some extent checked demand, especially for forward supplies, people preferring to cover only their immediate wants, while the higher bank rate was not in favor of speculation. The value of tin in the early part of November, declined to £62 1s. 3d. for spot Straits, but at this point a better tendency set in and a good business took place at advancing prices, £62 15s. being paid for spot. A relapse to £62 1s. 3d. was followed by a recovery to £62 15s., and between that figure and £62 6s. 2d. the market remained steady during the remainder of November and up to the third week of December, closing stronger at the end of the year.

The quotations at the close were £62 7s. 6d. to £63 sharp cash, Straits, and £63 12s. 6d. to £63 15s., three months ditto, with about 12s. 6d. premium for Australian (best brands) and £66 @ £66 10s. for English common ingots, with bars at 20s., and refined ingots at 40s. more.

AVERAGE MONTHLY PRICES OF STRAITS TIN IN LONDON, PER TON OF 2,240 LB.

Year.	Jan.	Feb.	March.	April.	May.	June.	July.	Aug.	Sept.	Oct.	Nov.	Dec.	Year.
	£ s. d.	£ s. d.	£ s. d.	£ s. d.	£ s. d.	£ s. d.	£ s. d.	£ s. d.	£ s. d.	£ s. d.	£ s. d.	£ s. d.	£ s. d.
1891......	91 1 10	90 8 1	90 6 10	89 16 3	91 13 9	93 3 1	91 17 9	91 11 3	91 11 8	90 19 9	91 8 5	91 15 3	91 4 0
1892......	89 19 4	89 3 1	89 8 1	91 17 6	95 19 4	100 13 5	97 2 6	94 5 0	92 10 9	94 7 6	94 1 3	92 6 3	93 9 6
1893......	92 7 6	91 16 3	94 11 6	94 5 6	91 14 4	86 14 0	82 19 4	79 10 0	79 18 9	78 15 0	76 3 0	75 16 3	85 7 7
1894......	73 2 6	71 2 6	64 15 0	68 7 6	70 10 0	71 5 0	70 1 3	65 7 6	71 7 6	71 2 6	67 2 6	62 13 9	68 18 1
1895......	60 2 11	60 1 1	61 9 5	63 19 7	65 12 8	62 14 2	64 8 4	64 7 10	65 0 8	65 17 6	64 18 10	61 15 2	63 6 8
1896......	59 5 9	60 14 4	60 7 9	59 13 10	60 0 4	60 14 3	60 17 4	59 16 0	58 10 9	57 7 4	58 11 11	58 0 1	59 9 11
1897......	60 3 2	61 4 2	59 18 9	59 17 11	60 17 10	61 16 6	62 5 7	61 10 1	61 12 8	62 11 9	62 11 9	62 10 0	61 8 0

NOTES ON THE METALLURGY OF TIN DURING 1897.

By Henry Louis.

ALMOST the only novelty of the year consists in the fact that an electrolytic extraction process has been tried by Messrs. Robertson & Bense of Hamburg, which is said to be a complete success, although no details are attainable. It is applied not to the ores direct, but to the hardhead obtained in smelting inferior ores, such as the Bolivian "*relavos*," slags, and other by-products. It is, of course, impossible to extract all the tin from slags and low-grade material by any method of smelting except by a precipitation process, in which the tin is reduced by means of iron. In this instance the smelting is performed in a small shaft furnace, the product being a clean slag and a hardhead containing 30% of tin and 50% of iron. This was formerly treated by liquation with lead, producing residues practically free from tin, and an alloy of lead and tin that was salable as such. This process worked perfectly well in practice, but is now being replaced by the above electrolytic process, by means of which pure tin is obtained direct from the hardhead in question.

Tin mining in the Iberian peninsula is attracting a certain amount of attention; the Tin Mining and Smelting Co. of Almaraz, a London company, had commenced operations in the Province of Zamora at Almaraz, and had erected large dressing and smelting plants; after this it thought of developing the mine, which proved not to be worth working, and which has accordingly been closed down. Active explorations are now being carried on in the Provinces of Corunna, Ponte Vedra, Zamora, and Orense in Spain, and in the adjoining Province of Tras os Montes in Portugal; the district of San Finx, in the first named, is well spoken of, and several of the recent developments are looked upon as hopeful. In all other respects the world's sources of tin supply have undergone no great modification. It is, however, probable that the recently accomplished federation of the native states of the Malay Peninsula may lead to such an improvement in the means of communication with the interior, and especially in the opening up of the great mountain axis, which is known to be rich in tin in many as yet unworked places, that a few years may possibly witness a still greater expansion of tin production in the peninsula. The falling off in the production during recent years seems to be due in no way to the exhaustion of the deposits, but to the fact that the drop in silver was at length making itself felt in the increased cost of rice and other supplies, and also in part to a scarcity of laborers that may possibly have been due to the Chino-Japanese war. There are extensive tin fields in the Malay peninsula still practically untouched.

TIN SMELTING AT THE MOUNT BISCHOFF WORKS, LAUNCESTON, TASMANIA.

BY HENRY LOUIS.

THE following description of tin smelting at the works of the Mount Bischoff Co., at Launceston, Tasmania, is based on information very kindly supplied by Mr. L. F. Latta, the smelting works manager:

There are six reverberatory furnaces of the ordinary Cornish type, the bed being 13 ft. 3 in. long by 9 ft. 6 in. maximum width. There is one stack for each pair of furnaces, and a refining kettle set close to the stack, as shown on the subjoined general plan of a pair of furnaces, the right-hand one being shown in section. The ore smelted is about two-thirds from the Mount Bischoff mines, containing 65 to 72% of metallic tin, oxide of iron being the chief impurity, and one-third alluvial ore from the east coast of Tasmania, averaging about 70% of metal, silica being the chief impurity. It is advantageous to mix these ores in smelting, since the silica tends to prevent too much of the iron of the first-named ore from being reduced and passing into the tin. The furnace charge consists of 50 cwt. of ore mixed with 10 cwt. of small coal; this is shoveled in through the two charging doors, the skimmings, etc., from the previous refining are thrown on top of the charge, and the doors are closed and luted with clay. A strong fire is put on, and the charge is examined and rabbled some three or four times. When all is well melted, the metal is tapped out into the oval brick-lined float in front of the taphole. The slag remaining in the furnace is fired on for another hour, and is then drawn out into sand beds for further treatment, when the furnace is ready for a fresh charge. The total time of working off a charge is eight hours, and each furnace treats 40 tons of ore per week.

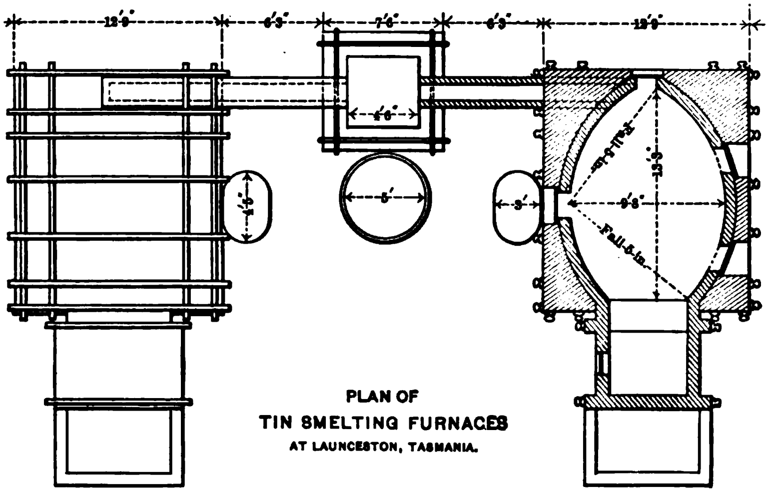

PLAN OF
TIN SMELTING FURNACES
AT LAUNCESTON, TASMANIA.

The metal in the float is allowed to stand for an hour, and is then ladled into the refining kettle, any unfused residue at the bottom being removed and added to the next ore-smelting charge. When the refining kettle is full, it is "boiled" in the usual way by means of pieces of green wood and continuously skimmed; this boiling takes two to four hours, the wood being renewed whenever the ebullition shows signs of slackening. Samples are taken from time to time in the usual way, and are passed when the fracture is silky and free from cracks. The impurity most to be feared is arsenic, 0.1% of which is sufficient to spoil the texture of the metal; as it cannot be removed by any known process of refining, it must be got rid of before smelting by carefully roasting the ore. When the tin is sufficiently refined the wood is withdrawn and the metal allowed to stand for awhile, after which it is cast into ingots. Any residue at the bottom of the kettle is set aside for retreatment.

The slags contain 10 to 20% of tin; they are broken to the size of road metal, and a charge of 25 cwt., mixed with 3 to 6 cwt. of small coal and 0.5 to 1 cwt. of lime, is smelted in the same furnace as is used for ore, but at a higher temperature and for 10 hours. Slags from Mount Bischoff ore do not need any addition of iron, but slags produced entirely from alluvial ores require iron in the form of either scrap or ore to produce clean slags.

The slag metal tapped from this charge is very thick and impure, and contains a large quantity of iron; it is thrown on top of the ore-smelting charges. The slags from the second smelting contain about 5% of tin, and can be thrown away. This apparently large percentage of tin can be reduced to 2% by a third smelting, or by adding large quantities of iron in the second smelting, but the difficulty of separating the iron from the metal produced and the injury done to the furnace render this further cleansing of the slag unprofitable. The total loss of tin amounts to 1.4 to 2% upon the ore—*e.g.*, an ore containing 72% of tin would yield from 70 to 70.6% of refined metal.

The cost of smelting one ton of tin ore, including repairs to furnaces, cartage of ore to the works, and of metal from the works to the ship, and rent of ground on which the works stand, but not including interest on capital outlay, is as follows: Wages and salaries, 17s. 10d.; coal (1.02 tons used for smelting), 13s. 8d.; fire-brick, etc., 1s. 9d.; cartage, rent, lime, sundries, 3s. 2d.; total, 36s. 5d., or $8.85.

In Queensland a somewhat similar furnace is used; lodestuff carrying up to 30% of black tin is crushed very fine, a 10-head battery crushing 100 tons per week, and concentrated on Frue vanners. The ore is impure and is calcined in the same furnace as is used for smelting. The smelting furnace treats three charges each of three tons of ore in 24 hours, and burns 11 cords of wood in the process.

The geology of the Mount Bischoff tin mine and the methods of ore dressing employed there were described by H. W. F. Kayser and Richard Provis in the *Proceedings of the Institution of Civil Engineers*, Vol. CXXIII., 1895. The ore which occurs in large veins averages from 2 to 3% cassiterite. The total cost of mining and delivering the ore to the dressing works is 3s. 2¼d., or say 80c. per ton of 2,240 lb. The ore is crushed by means of California stamps to 14-mesh size, and is concentrated on jigs, buddles, and in keeves. The cost of dressing is 1s. 1⅛d., or say 27c. per ton, about 6,000 long tons of material being treated per month. The first grade of concentrates averages 70.5% tin and the second grade 65%. It does not pay to dress cleaner than this, since the extra cost and loss more than offset the increased value of the ore. The tailings finally discharged from the works assay between 0.01 and 0.2% tin.

TUNGSTEN.

At the present time there is no production of tungsten ore in the United States, but active steps to begin it were made in 1897 by the Rare Minerals Mining Co., which was organized to take over the mines on Long Hill, at Trumbull, Fairfield County, Conn. This company commenced the erection of a dressing-plant, and extended the development of the mine, the latter work resulting in the output of some ore, though in conformity with our custom this is not reckoned as production, not having been put in marketable form. An assay of a 2,000-lb. sample, supposed to represent the average of the vein thus far exposed, showed 5.98% tungsten, or about 12% wolframite. By crushing and jigging a concentrated product (274 lb.) was obtained which assayed 38.35% tungsten, or about 76.7% wolframite. The occurrence of wolfram ore at this mine was described by Dr. Adolph Gurlt at the meeting of the American Institute of Mining Engineers, August, 1893, and in THE MINERAL INDUSTRY, Vol. II.

Besides Connecticut the existence of wolfram ore at other places in the United States has been noted, but none of these seems to be of commercial importance. Recently Prof. William P. Blake has reported the occurrence of the mineral at several localities in the southern part of Pima County, Ariz., particularly in the Arivaca mining district, where it is associated with gold-bearing quartz. This occurrence of an ore of tungsten in auriferous quartz veins is rare, but has been noted before by Prof. Blake at Murray, Idaho, where there is a vein of tungstate of lime (scheelite), beside a gold-bearing quartz vein.

The demand for wolfram ore in the United States is not at present very large; probably it does not exceed 60 to 70 tons per annum. The value varies with the grade, ranging from $1.60 per unit of tungstic acid, WO_3, to $1.40. In order to be marketable the ore should assay 50% WO_3 or upward, and should be practically free from sulphur and phosphorus, but it may contain carbon and silica without affecting it except in so far as these elements reduce the tungstic acid.

In Europe the annual consumption of wolfram ore amounts to about 600 metric tons per annum, and American ore can undoubtedly find a market there at prices of $70, $80, and $90 per metric ton for 50%, 60%, and 70% ore respectively, delivered alongside ship at New York. These prices correspond to $1.40, $1.33, and $1.20 per unit. At lower prices, it seems to be the opinion in the trade, the consumption might be increased considerably.

The supply of wolfram ore is at present derived from Cornwall, Saxony, Bohemia, Spain, Portugal, Australia, and New Zealand. Wolfram ore also occurs in France, but it is there often associated with pyrite and mispickel, and is consequently unfit for steel making. The Saxon and Bohemian deposits were described by Prof. Helmhacker in the *Engineering and Mining Journal* of August 15, 1896. He states that the principal consumer of wolfram ore in Austria is the steel works at Kapfenberg, in the Murz Valley, Upper Styria, but a considerable quantity is exported to Germany. The value of the ore is determined chiefly by its tenor of tungstic acid (WO_3). Analyses of the three grades shipped from Zinnwald, Saxony, are as follows:

Grades.	WO_3.	FeO.	MnO.	CaO.	MgO.	SnO_2.	Gangue.
	Per Cent.	Per Cent.	Per Cent.	Per Cent.	Per Cent.	Per Cent.	Per Cent.
Lump ore and crystals................	76.5	10.3	12.2	1.1	Trace.	Trace.	....
Granular ore..........................	73.6	9.8	12.6	0.4	Trace.	3.6	....
Concentrates..........................	60.1	8.1	9.6	0.9	Trace.	8.4	13.1

We are unable to present complete statistics of the world's production of wolfram ore, the figures for New Zealand and certain Australian colonies being lacking. The production in Europe and Queensland are given as follows:

PARTIAL PRODUCTION OF WOLFRAM ORE IN THE WORLD. (*a*) (IN METRIC TONS.)

Year.	Austria.	Cornwall.	Portugal.	Queensland	Saxony.	Spain.
1890......	37	106	....	....	37	....
1891......	57	140	....	....	42	....
1892......	73	127	....	....	37	26
1893......	43	23	19	4	42	19
1894......	40	*Nil.*	19	107	39	21
1895......	35	*Nil.*	12	25	29	14
1896......	....	44	14	3	....	31

(*a*) From the official reports of the respective countries, except the figures for Portugal, which are from the *Annual General Reports on the Mineral Industry of Great Britain and Ireland*, by Le Neve Foster.

According to researches on tungsten by H. Moissan, the pure metal is readily obtained by the reduction of tungstic acid with carbon in the electric furnace. With a large excess of carbon the carbide CW_2 is formed, which, in the fused state, readily dissolves more carbon, graphite crystallizing out on cooling. Pure tungsten can be readily filed and forged, it welds easily, has no action upon a magnetic needle, and melts at a point higher than chromium and molybdenum.

In *Comptes Rendus* M. Defacqz describes experiments on the reduction of tungsten ores by charcoal in the electric furnace. He mixed wolframite from Zinnwald containing 72% WO_3, 5% FeO, 16% Mn_3O_4, and 2% CaO, with 14% of sugar carbon, and subjected the mixture to a current of 1,000 ampères and 50 volts. In 12 minutes there was obtained a regulus containing 92% of tungsten.*

The uses of tungsten were fully described in THE MINERAL INDUSTRY, Vol. II., *et seq.* In 1897 there were no new developments worthy of special note, except in the preparation of the fluoroscopes used in X-ray observations, in which a tungsten compound is used, and in the separation of wolframite and cassiterite, which was accomplished very successfully by the Wetherill magnetic machines.

---

* *Engineering and Mining Journal*, Oct. 31, 1897.

URANIUM.

BY L. M. DENNIS.

THIS element was discovered by Klaproth in 1789 in the mineral uranite. A few years later Berzelius and Arfvedson investigated the new element and thought that they had succeeded in preparing metallic uranium; but what they considered to be the metal was an oxide of uranium, as was proved by Peligot, who first made the metal in 1840.

Uranium is not very widely distributed, and it is found in but few localities in amounts sufficient to warrant its extraction on a commercial scale. The most important uranium mineral is uraninite (pitchblende), a uranate of uranyl (UO_2), lead, and usually thorium. The rare earths of the cerium and yttrium groups also are frequently present. It occurs as a secondary mineral associated with ores of silver, lead, copper, etc., at Johanngergenstadt in the Erzgebirge of Saxony, and at Joachimsthal and Pribram in Bohemia. This district has for many years supplied most of the uranium used in the arts, but a little ore (from 20 to 40 tons per annum) is produced in Cornwall.

A considerable quantity of pitchblende was exported from Colorado in 1897. All of this ore was obtained from a group of mines in Leavenworth Gulch, near Black Hawk, in Gilpin County, Colo. The existence of uranium ore in the Wood mine at this place was discovered by Richard Pearce of Argo, in 1871, and a considerable quantity of it was extracted at that time. There was not, however, a market for all the mineral that was won, and an accumulation of about 15 tons was allowed to lie at the smelting works at Argo until last year, when it was purchased by the agent of a French metallurgical works for shipment to France. The lot averaged 53% black oxide of uranium and the price paid is said to have been $10 per unit in Denver.

There were also shipped from the Kirk lode (about 800 ft. north of, and parallel to, the Wood lode), 2.25 tons of ore, of which 500 lb. were exported and 4,000 lb. were shipped to John C. Wiarda & Co. of Brooklyn, fetching 75c. per lb. on a basis of 50% uranous-uranic oxide. At the end of the year the miners who had extracted this ore had several tons additional on hand awaiting shipment, and it was reported that the Wood mine, which has been full of water since 1895, is to be reopened for uranium ore during the coming spring. In both the Wood and Kirk mines the pitchblende occurs irregularly in small bunches, and neither is likely to be a steady or large producer.

An account of the discovery and occurrence of uranium ore in Gilpin County is given in THE MINERAL INDUSTRY, Vol. II., under the caption, "The Rare Elements." Further notes on the subject were read by Dr. Pearce before the Colorado Scientific Society, September 9, 1895. According to him the country rock in which the Wood lode occurs is mica schist, traversed by veins of feldspar and quartz, inclosing magnetite. In this lode there was one lense which showed a face of 6 in. of solid pitchblende. The associated minerals were pyrite, chalcopyrite, pyrrhotite and galenite. At the time of the first discovery (in 1871), about 3 tons of ore assaying 60% of black oxide of uranium were saved and shipped to London, where it realized about $7,500.

In 1894 the mine was reopened, and in drifting from the old shaft at a greater depth another lenticular deposit of pitchblende was discovered. At that time, however, there was no market for the mineral, and the lessees being unsuccessful in their search for gold-bearing ore, the mine was soon closed down again.

The mineral which has been purchased recently for export to France is being used as a source of uranium for the preparation of uranium steel, which is being employed by the French government for the manufacture of guns. Since the percentage of uranium needed for this purpose is very small, there is not of course much chance for a large consumption of uranium minerals in this direction, even if a larger supply were obtainable.

Some explorations for uranium ore were carried on at Annie Creek, Lawrence County, in the Black Hills, S. Dak., in 1897. So far as discovered in this locality, the ore is autunite (phosphate of lime and uranium) of too low grade to be valuable as a source of uranium. Explorations have been continued in hopes of coming upon a deposit of pitchblende, but so far they have not been successful.

In the Patera process, which is used in the extraction of uranium from the Joachimsthal ore, the finely pulverized ore is roasted at a high temperature to remove sulphur and arsenic so far as possible; it is then mixed with 15% of soda and 2% of saltpeter, and calcined at a moderate red heat in a reverberatory furnace. The charge, which is at first gray, soon turns brown, owing to the formation of sodium uranate. With much uranium, the color becomes yellowish brown. This heating is continued for about five hours in order to convert vanadium, molybdenum, tungsten, and arsenic into compounds which are soluble in water. These elements are then removed by washing the mass with hot water. The residue is stirred up with water in wooden vats and concentrated sulphuric acid is added. About 1 lb. of acid is required for 3 lb. of a residue carrying approximately 45% of uranous-uranic oxide. It is advantageous to add a small amount of nitric acid (about 1 lb. to every 30 lb. of residue) to change any uranous oxide to uranic oxide. The acid is allowed to act for some time, being meanwhile frequently stirred. Water is then added and the whole is allowed to stand undisturbed. The clear liquid is then drawn off and filtered. To this green solution of uranic oxide an excess of soda is added, which at first precipitates uranic oxide together with the other oxides present in the solution; but the excess of soda soon dissolves the uranium completely as sodium uranyl carbonate, while the other substances remain, for the most part, in the precipitate. To complete the extraction of the uranium from this precipitate, it is boiled with a soda solution, and this solution is then used in the first treatment of the next portion.

The beautiful golden-yellow solution of sodium uranyl carbonate is now neutralized with sulphuric acid and boiled in copper vessels, whereupon sodium uranate is thrown down as a heavy yellow precipitate. This is placed in bag filters, washed, pressed, dried, and ground. It is placed upon the market in this form under the name of "uranium yellow." The German price lists of November, 1897, quote commercial sodium uranate at $5.04 per kg.

The following method for obtaining sodium uranate from uraninite is due to Giesecke: 100 lb. of the mineral, with 50 lb. of sulphuric acid, and some water are stirred to a paste in a lead tank, and from 12 to 14 lb. of nitric acid (sp. gr. 1.40) is then added. The mass heats up strongly, but becomes solid when cold. It is then removed from the tank and heated in iron dishes until the fumes of sulphuric acid begin to appear. It is leached with water while still hot, and the solution thus obtained is poured in a thin stream into a solution containing 1 part of soda to 10 of water, which has previously been warmed to 60° C. When the soda solution has been nearly neutralized it is filtered and boiled to precipitate the salts of lime, magnesia, and copper. After these have been removed by filtration, the sodium uranate is precipitated from the filtrate by means of either sulphuric or hydrochloric acid.

The first preparation of the metal by Peligot has been mentioned above. It has recently been prepared by Moissan in the electric furnace.*

---

* See THE MINERAL INDUSTRY, Vol. V., p. 472, for the details of Moissan's method and the properties of the metal.

VANADIUM.

By L. M. Dennis.

The element vanadium was discovered by Sefström in 1830 in the iron obtained from the Taberg ores. Del Rio had first found it in a lead ore from Zimapan, Mexico, but he thought it was impure chromium, while Descotil had considered it to be lead chromate. It has since been found that the element is rather widely distributed although it usually occurs in but small amounts. The few minerals that might properly be termed vanadium ores, in which the vanadium is present in appreciable quantity, are vanadinite, a vanadate and chloride of lead containing from 8 to 12% vanadium, and found in considerable amount in the mining regions of New Mexico and Arizona; descloizite, a vanadate of lead and zinc containing from 10 to 12% vanadium, found also in New Mexico and Arizona; and mottramite, a vanadate of lead and copper containing about 9% vanadium, occurring at Alderly Edge and Mottram St. Andrews, England. Vanadium is also found in smaller amounts in the uraninite at Joachimsthal in Bohemia, in wulfenite from Bleiberg, Carinthia, in the Mansfeld copper slags. and in various iron ores. Stolba has detected the occurrence of insoluble vanadium compounds in many clays, the vanadium being present in amounts up to 0.3%, and he calls attention to the fact that the incrustations of salts which are seen at times on freshly laid brick frequently contain appreciable amounts of vanadic acid. The occurrence of vanadium in certain South American coals has already been noted in THE MINERAL INDUSTRY, Vol. V., p. 475.

The *Boletin de Minas* gives the following details concerning the occurrence of vanadium in Peru. The vanadium is found in certain anthracite coals from Yauli which according to analysis contain about 0.45%. If the coal is low in ash, the percentage of vanadium in the ash will be correspondingly higher. In the case of one coal which gave 1.2% ash, 38% of the ash was vanadium. Coals containing 0.24% vanadium have also been found at Mendoza in the Argentine Republic.

To enable one to compare this Peruvian coal with other vanadium material, it may be mentioned that the impure vanadinite, which is frequently employed as a source of vanadium, rarely contains more than 0.5% of the metal. The crude material which is worked for vanadium in Joachimsthal contains 0.1% of vanadium, the gray pig iron of Wiltshire 0.7%, and the iron slags of Creuzot 1%.

At the last-named place they are able to prepare 60,000 kg. of vanadic acid annually by the Osmund-Witz process.

Numerous methods for the extraction of vanadium from various ores have been devised. Of those which have been employed on a commercial scale, the following may be mentioned:

At Joachimsthal, in the Erzgebirge of Bohemia, there are large deposits of uranium ore. For preparing uranium yellow from this ore (see Uranium), Patera devised a process which enabled them at the same time to extract the vanadium which the ore contains. Although the preparation of vanadium compounds has been discontinued for the present at these works, a brief description of the Patera method may be of interest. The roasted ore is heated with 15% soda and 2% saltpeter, and is then treated with hot water. This leaves the uranium in the residue, but dissolves the alkali salts of vanadic acid, molybdic acid, and arsenic acid. The arsenic is removed by adding ammonia and magnesium sulphate, which precipitate the arsenic as ammonium magnesium arsenate. The liquid is then made acid with hydrochloric acid, an infusion of nutgall is added, and the whole is carefully neutralized with soda. The precipitate which forms is filtered and dried, then mixed with its own weight of a mixture of equal parts of soda and Chile saltpeter and fused. This mass is then boiled with water, filtered, the solution concentrated by evaporation, and the vanadic acid present is precipitated in the form of ammonium vanadate by adding ammonium chloride.

The process devised by G. Witz and F. Osmund is described in the *Bulletin de la Société Chimique de Paris,* Vol. XXXVIII., p. 49. They call attention to the occurrence of vanadium in many iron ores, and state that in the smelting of the ores, no matter what process is used, the vanadium and phosphorus behave similarly and will always be found together. Hence in the basic process of Thomas and Gilchrist the vanadium will be found in the basic slag. One sample of basic slag of which they give an analysis contained 46.3% lime, 16.5% silica, and 1.92% vanadium pentoxide, corresponding to 1.08% vanadium. To extract the vanadium from this material the crude slag is treated with hydrochloric acid at ordinary temperature, allowed to stand several days, diluted then with water and the liquid is drawn off. A saturated solution of ammonium acetate is then added in sufficient amount to replace the free hydrochloric acid by acetic acid. There then forms a precipitate high in vanadium, one sample showing on analysis 19.15% of the element. The precipitate is dried and roasted in contact with air, the vanadium being thereby oxidized to orthovanadic acid. Upon treating the mass with dilute ammonia, a solution of ammonium orthovanadate is obtained, and from this ammonium metavanadate is precipitated by means of ammonium chloride. In one test of the method 14 kg. of a slag containing about 1.5% furnished 250 g. of the metavanadate.

The following method was used by Roscoe in extracting vanadium from the impure mottramite found at Alderly Edge and Mottram in England. The pulverized ore is treated with strong hydrochloric acid, and chloride of lime and milk of lime are added to the solution until the reaction is alkaline. Nickel, cobalt, and a part of the copper remain in solution while lead, iron, vanadium and the greater part of the copper are found in the precipitate. This precipitate is again dissolved in acid and the copper is thrown down by zinc. Thė liquid still remained blue even after all of the copper was thrown down, and it was this behavior which led Roscoe to the discovery of vanadium in this material. By precipitating this liquid he obtained a product containing 2% of vanadium mixed with lead, iron, lime, arsenic, phosphoric acid, and sulphuric acid. This precipitate was dried, powdered, mixed with four times its weight of carbon, and highly calcined for several days, air being excluded. By this means all of the arsenic was driven off. The residue was then mixed with one-fourth its weight of soda and roasted in a reverberatory furnace, this procedure transforming all of the vanadium into a soluble vanadate. The solution which was obtained by extracting this mass with water was acidified with hydrochloric acid and treated with sulphur dioxide to reduce the arsenic acid to arsenious acid. The latter was then precipitated by hydrogen sulphide and removed by filtering. The blue solution was exactly neutralized with ammonia, the vanadium being thus thrown down as an oxide. This oxide was treated with nitric acid, dissolved in water and the solution evaporated to dryness. The crude vanadium pentoxide thus obtained was digested with a solution of ammonium carbonate, which dissolved it and left behind the small amounts of ferric oxide, alumina, calcium sulphate, etc., still present. The filtered solution was then concentrated until the ammonium vanadate separated. This was washed with ammonium chloride solution, decomposed by heat, and the residue dissolved in ammonia. Upon recrystallizing the ammonium vanadate thus obtained a pure product resulted.

Pure metallic vanadium has thus far been made only by long heating of vanadium dichloride in a current of hydrogen gas. Moissan was unable, with the use of the electric furnace, to prepare the metal free from carbon. (See THE MINERAL INDUSTRY, Vol. V., p. 474, and also for descriptions of the alloys of vanadium and the effect of vanadium upon the properties of steel.) Regarding the action of vanadium upon aluminum alloys, it is stated that aluminum bronze with 8% of aluminum and 1% of vanadium has a tensile strength of 45 tons with 12½% elongation.

Vanadium salts are largely used in the preparation of aniline black, which is formed by oxidizing aniline with potassium chlorate in the presence of a vanadium compound. If there is sufficient potassium chlorate present to oxidize the vanadium oxide to pentoxide, then one part of an alkali vanadate is able to change 1,000 parts of aniline to aniline black.

The brothers Lumiere have studied the photochemical behavior of vanadium salts and find that with some of these salts it is possible to prepare paper which is very sensitive to light. One of the best solutions in which to dip the paper is the potassium vanadium tartrate, which is obtained in solution when vanadium pentoxide is shaken with a solution of potassium bitartrate.

Vanadium is also used in porcelain manufacture for the preparation of a gilding which is capable of withstanding high temperatures.

At the present time (January, 1898) crude vanadium chloride sells in Germany at $19.20 per kg., vanadium oxide at 72c. per g., and metallic vanadium at $1.44 per g.

ZINC AND CADMIUM.

THE production of spelter in the United States in 1897 was 100,387 short tons, against 77,637 short tons in 1896. Distributed according to districts, the production in 1897 was as follows: Eastern and Southern works, 9,900 short tons; Illinois and Indiana, 38,680 short tons; Kansas and Missouri, 51,807 short tons. The production in the first half of the year was 46,857 short tons, while in the second half, notwithstanding the decline in the market price of the metal, the production increased to 53,530 short tons. The increase in spelter production in 1897 was due entirely to the works of Illinois, Indiana, Kansas, and Missouri, those of the Eastern and Southern States making about the same outturn as in the previous year.

There were in operation in 1897 in the Eastern States five works, three of these being in New Jersey, operated by the New Jersey Zinc Co., and the other two in Virginia. In Illinois and Indiana there were seven works in operation. In Kansas and Missouri there were six works, not including those of the Cherokee-Lanyon Spelter Co. Important additions were made to several of these works during the year, while the construction of two or three new plants has been commenced, and it is expected that these will be in operation early in 1898.

The capacity of the Western spelter works was increased largely during 1897. The Nevada Spelter Co. of Nevada, Mo., built four new furnaces. Robert Lanyon's Sons Spelter Co. erected a large plant at Iola, Kan. W. & J. Lanyon constructed a new plant at the same place, which they will operate in addition to their works at Pittsburg. The new works of the Palmer Smelting Co., also at Iola, are approaching completion. A 150x14-ft. Ropp furnace was introduced at the works of the Robert Lanyon's Sons Spelter Co. for blende roasting. The Empire Zinc Co. added one block to its Joplin works. The Cherokee Lanyon Spelter Co. works at Rich Hill, which were damaged seriously by a wind storm during the summer, were rebuilt and put again in operation in the autumn. Humphrey, Chipman & Co. resumed work at the plant at Wenona, Ill., and later took in hand the Indianola works at Upland, Ind., which had been destroyed by fire in November. The Swansea Vale Zinc Co. nearly completed its new works at Sandoval, Ill.

The conditions which prevailed in the American spelter industry in 1897 were very peculiar. In 1896 there was a consolidation of ten works in Kansas and

Missouri, most of them small, under the title of the Cherokee-Lanyon Spelter Co., which aimed, through the control of a large proportion of the production, to govern the Western spelter market. The result of this attempt was a failure, partly because two of the large producers of the West remained independent, and partly because the increase in the price of the metal, which was brought about temporarily, led to the construction of several new works by persons who had been previously engaged in the industry with some of the concerns which went into the consolidation. As zinc smelting is carried out in Missouri and Kansas, where excellence in the metallurgical practice is not much striven for, new works can be erected with great rapidity and comparatively little outlay of capital. This undoubtedly results in injustice to the miners, but the conditions prevailing compel them to accept from the smelters whatever terms are offered. The zinc resources of these districts are very large, and the conditions under which they are exploited are generally favorable. Under these circumstances there was quickly a new production of zinc, which the Cherokee-Lanyon Spelter Co. could not control.

Early in 1897, the market having slumped off notwithstanding all attempts to control it, an agreement to regulate prices was formed between the Cherokee-Lanyon Spelter Co. and several of the independent producers. This agreement did not include the two large works of Illinois. These works, however, are the only ones in the United States which have rolling mills, and since their product is marketed chiefly in the form of sheet zinc, they are practically out of the spelter market. The Eastern producers, none of which entered this agreement, also occupy an independent position, not only by virtue of their geographical position, but also because of the high grade of the spelter which they produce. The agreement among the Western producers provided for the regulation of their output by allotment, and thereby for the maintenance of prices, and this was accomplished more or less successfully up to the middle of the year.

The combination was unable, however, to reap all the benefits of this increase in price, which was, of course, participated in by those producers who were not subject to the agreement. As a result of this situation, the Cherokee-Lanyon Spelter Co. was obliged to market its surplus product abroad at a sacrifice. At one time, when Western spelter was quoted in New York at 4.20c. per lb., while good ordinaries were selling in London at the equivalent of 3.84c. per lb., the Western exporters could not have realized more than 3.50c. per lb., deducting the cost of carriage, insurance, etc. Most of the Western spelter that was exported was shipped to Liverpool by way of Galveston, a rate of 30c. per 100 lb. having been made by that route. The exports of zinc from the United States in 1897 amounted to 14,245 short tons. The total exportation in 1896 was 10,130 short tons, which, up to that time, was the most for any year in the history of the country.

A new feature of the American zinc industry in 1897 was the large exports of zinc ore to Europe. The exportation of the high-grade New Jersey ore prepared by the Wetherill process on a large scale was begun in 1896. This was continued in 1897, but there were also last year important exports from the Joplin district, most of the latter going to Wales. Vivian & Sons, the large smelters of Swansea, established an agency in the district. The total exportation of zinc ore in 1897 was 9,251 short tons, against 2,324 tons in 1896.

The production of zinc oxide in 1897 was 26,262 short tons, against 15,863 short tons in 1896. This was produced chiefly at the three works of New Jersey by the Wetherill process; but there was also a good deal of zinc-lead pigment produced in Colorado, which has been reckoned as zinc oxide on the basis of its tenor in zinc.

PRODUCTION OF SPELTER IN THE UNITED STATES.

States.	1892.	1893.	1894.	1895.	1896.	1897.
Illinois and Indiana	30,227	29,725	28,948	33,748	31,656	38,680
Kansas	22,953	22,085	26,060	25,916	36,566	33,395
Missouri	16,169	13,737	12,000	10,726		18,412
South and East	14,733	10,708	6,996	11,468	9,415	9,900
Total tons of 2000 lb.	84,082	76,255	74,004	81,858	77,637	100,387
Total tons of 2240 lb.	75,073	68,525	66,074	73,088	69,319	90,078
Total metric tons	76,258	69,159	67,185	74,245	70,432	91,071

PRODUCTION OF ZINC OXIDE IN THE UNITED STATES.

Year.	Quantity.		Value.		Year.	Quantity.		Value.	
	Short Tons.	Metric Tons.	Totals.	Per Short Ton.		Short Tons.	Metric Tons.	Totals.	Per Short Ton.
1894	22,814	20,697	$1,711,275	$75.00	1896	15,863	14,391	$1,189,725	$75.00
1895	22,690	20,498	1,588,300	70.00	1897	26,262	23,825	2,114,091	80.50

IMPORTS OF ZINC AND ZINC OXIDE INTO THE UNITED STATES. (IN POUNDS.)

Year.	Sheets, Blocks, Pigs, and Old.		Manufactures.	Total Value.	Oxide.	
					Dry.	In Oil.
1893	425,998	$22,301	$20,756	$43,687	3,900,749	254,807
1894	512,932	17,271	12,342	29,618	2,850,771	113,540
1895	864,118	29,352	12,183	41,535	4,546,038	129,343
1896	856,044	25,904	15,728	41,632	4,572,781	311,023
1897	2,557,341	95,883	19,431	115,314	5,564,768	502,357

EXPORTS OF ZINC AND ZINC ORE FROM THE UNITED STATES. (IN POUNDS.)

Year.	Ore and Oxide.		Plates, Sheets, Pigs, and Bars.		Manufactures.	Total Value.
1893	109,760	$1,271	7,446,934	$418,673	$225,857	$640,801
1894	....	5	3,621,934	144,278	99,418	243,701
1895	48,000	1,008	3,141,285	155,975	50,126	207,109
1896	4,648,000	47,408	20,260,169	1,018,620	51,216	1,112,244
1897	18,502,400	211,350	28,490,662	1,356,538	71,021	1,638,909

Arkansas.—The Morning Star mine, situated between Yellville and Harrisonville, is the only producer of zinc ore in Arkansas, and no shipments were made from it in 1897. With respect to the zinc deposits of this State reports are conflicting. According to some the ore exists only near the surface, while others are of the opinion that certain deposits might be exploited profitably if transportation facilities were better.

Missouri.—The production of zinc ore during the fiscal year ended June 30, 1897, was 93,148 tons, an increase of 394 tons over the previous year. The average value was $18.32 per ton, against $19.37 in 1896. The production of zinc ore in the Joplin district (including the various camps of Missouri and Kansas) was 175,024 tons in the calendar year 1897, which was an increase of 21,942 over the previous year. The more part of this increase was attributable to the developments of new mines in the vicinity of Galena, Kan., and Joplin, Mo. A good deal of Eastern capital was invested in the district and a large amount of new prospecting was undertaken. Upwards of 25 new steam concentrating plants were built in the district during the year. The exportation of zinc ore from the Joplin district amounted to 2157 short tons.

New Jersey.—The production of zinc ore in New Jersey in 1897 was 76,973 long tons, against 76,623 in 1896 and 63,740 in 1895. The exports of zincite-willemite concentrates amounted to 6334 long tons.

Oklahoma.—Workable deposits of lead and zinc ore are said to have been discovered in the Kaw reservation.

Tennessee.—Many forms of zinc ores exist in upper East Tennessee, and deposits of more or less magnitude have been found in nearly every county in this section, but few of them have proved to be of economic value. Perhaps the most valuable deposits would be those in Union and Claiborne counties, if means of transportation were afforded. Considerable quantities of ore have been mined from the Straight Creek mines on Clinch River, and the new Prospect mines, on Powell's River, in these counties. The ore was floated down the river to Clinton, on the Clinch River, where it was smelted. Work has been abandoned at these deposits, on account of the uncertainty and expense of getting the ore to the smeltery, the rivers being small and only navigable a short period of the year.

The zinc deposits at Mossy Creek, which have been worked for a number of years, have been idle since 1895. The work had grown very expensive, and the proportion of ore to gangue matter apparently too small to justify further development at this place. In 1896 a valuable deposit was discovered and opened at New Market, about two miles south of the Mossy Creek development. A small quantity of ore has been mined, and the deposit gives promise of continuance. Here both the carbonate and blende are found in close proximity. A crusher and washer have been erected convenient to the workings. The ore, after being crushed and washed, is hauled to New Market, two miles distant, whence it is shipped to the Ingalls Zinc Co. in Indiana. This was the only zinc mine in operation in Tennessee in 1897. Its output was about one carload per week.

This deposit occurs in the Knox dolomite, a dark blue, crystalline rock at that place. The ore-bearing stratum is 50 ft. wide at the surface, its length and depth being still unknown. The surface ore is smithsonite, changing to blende with depth. The latter is of the yellow variety with waxy luster. As exposed it occurs in parallel veins, with cross-veins intersecting, in the dolomite. These veins, or veinlets, vary from less than an inch to 3 ft. in thickness, and apparently increase in size with depth. The gangue is the dolomite country rock, but calcite sometimes occurs. The following analyses of the ore were made at the University of Tennessee:

1. Smithsonite = SiO_2, 13·10%; $FeCO_3$, 1·32%; Fe_2O_3, 0·66%; $CaCO_3$, 1·07%; $MgCO_3$, 0·56%; $ZnCO_3$ (by difference), 83·29%.

2. Blende = SiO_2, 7·57%; Fe_2O_3, Al_2O_3, 1·66%; $CaCO_3$, 5·98%; $MgCO_3$, 0.04%; ZnS (by difference), 84·75%.

THE PRODUCTION OF ZINC IN EUROPE.

THE production of zinc in Europe in 1897 was 347,995 long tons, against 344,355 long tons in the previous year. The increase was consequently much less both proportionately and in the aggregate than in the United States. The increase in the European production occurred entirely in Belgium and the Rhine district, France and Spain; the remaining zinc-producing countries showing a decrease. In Belgium, Holland, and the Rhine district there were 17 producers, the same number as in the previous year; the Vieille Montagne Co. continued to hold the premier place, contributing more than one-third of the total output of the district. In Great Britain there were nine producers, one less than in 1896, the Nenthead & Tynedale Co. having dropped out of the list. In Spain there was only one producer as heretofore. In France there were four, against three in 1896, the new Côte-d'Or works having gone into operation. In Upper Silesia there were nine producers, the same number as in 1896. In Austria there were four producers, the works at Merklin in Bohemia having suspended operations. In Poland there were only two producers as heretofore.

PRODUCTION OF ZINC IN THE WORLD. (IN METRIC TONS.)

Year.	Austria. (*a*)	Belgium. (*b*)	England. (*c*) Native Ores.	England. (*c*) Foreign Ores.	France. (*b*)	Germany (*b*)	Russia. (*d*)	Spain. (*b*)	United States. (*e*)	Totals.
1892......	5,237	91,546	9,500	21,302	20,609	139,938	4,374	5,925	76,258	374,689
1893......	5,870	95,665	9,585	19,397	22,419	142,956	4,522	5,752	69,159	375,325
1894......	6,810	97,041	8,260	24,448	23,387	143,577	5,014	5,100	67,135	380,772
1895......	6,456	107,664	6,760	23,241	24,200	150,286	5,039	5,845	74,245	403,736
1896......	6,888	113,361	7,224	19,070	35,585	153,100	6,264	6,183	70,432	418,057
1897 (*f*)..	9,332	....	23,805		....	....	5,852	....	91,071	445,650

(*a*) The statistics for Austria are taken from the official reports of the Mines Department, except for 1897 for which the figure reported by Henry R. Merton & Co. has been used. It is to be noted that Merton's figures for Austria are generally higher than the official figures notwithstanding that the Austrian statisticians include the make of zinc gray with the spelter. Thus Merton reported 9403 metric tons as the Austrian production in 1896, while the official statisticians gave only 6888. The discrepancy appears to be due to the Galician works, which give higher figures to Messrs. Merton than to the Government, those for the three remaining works in Austria agreeing closely. The official statistics will probably not credit Austria with a larger production than 6800 tons in 1897.

(*b*) Official statistics.

(*c*) The statistics for England are arrived at by deducting the zinc produced from domestic ores, as reported in the official Blue Books, from the total output of the smelting works as stated in the reports of Messrs. Henry R. Merton & Co.

(*d*) From official reports, except the figures for 1895, 1896, and 1897, which are as reported by Henry R. Merton & Co.

(*e*) Statistics compiled from direct returns by the producers to THE MINERAL INDUSTRY.

(*f*) According to Henry R. Merton & Co., Belgium, Holland, and the Rhine district of Germany in 1897 produced 187,406 metric tons of spelter, against 182,606 in 1896; Upper Silesia produced 95,550 (97,409), and France and Spain 32,634 (28,905).

PRODUCTION OF ZINC ORE IN EUROPE. (IN METRIC TONS.)

Year.	Algeria	Austria	Belgium.	Bosnia.	France.	Germany	Great Britain.	Greece. (*b*)	Italy.	Norway. (*a*)	Russia.	Spain.	Sweden
1891	13,636	28,828	14,280	47	56,300	793,544	22,580	28,341	120,685	498	8,676	78,216	61,591
1892	21,907	33,944	12,260	16	69,236	800,167	27,811	27,695	129,731	576	4,369	74,265	54,981
1893	24,400	30,731	11,310	*Nil.*	74,400	787,919	23,880	22,589	132,767	(*c*)	4,501	62,616	46,623
1894	29,703	28,491	11,585	*Nil.*	80,065	728,616	22,170	20,830	131,777	200	1,440	58,964	47,029
1895	14,300	25,862	12,230	*Nil*	72,989	706,423	17,758	24,031	121,197	(*d*)	(*d*)	54,109	31,349
1896	17,587	26,887	11,630	*Nil.*	81,346	729,942	19,588	22,700	118,171	(*d*)	(*d*)	64,828	44,041

(*a*) Zinc-lead ore. (*b*) Including blende and calamine, calcined. (*c*) Not reported in Government statistics. (*d*) Statistics not yet published.

Canada.—A zinc-blende mine has been developed on Calumet Island, in Pontiac County, by a shaft to a depth of 75 ft. About 250 tons of high-grade and 100 tons of low-grade ore were taken out, and six carloads were shipped to Swansea in 1897.

England.—The Nenthead mines in Cumberland, which were purchased in 1896 by the Vieille Montagne Co., were equipped in 1897 with plant and machinery to turn out 10,000 tons of blende per annum.

Russia.—N. Sokolow reports* the discovery of deposits of blende in the vicinity of Tschiatury, in the Kutais government. An analysis of the ore showed 57.82 % zinc, 31.9 % sulphur, and 10.28 % insoluble residue.

As heretofore the only production of zinc and zinc ore in Russia in 1897 was made in Poland. Zinc is produced in this kingdom by the Pod Bendzinen works, which belong to the crown, and are operated under lease by Dervis, Pomeranzow & Co., and by the Paulina works of the Sosnowice Co. The former turned out 178,832 poods in 1896 and the latter 203,142, the aggregate being 74,914 poods more than in 1895. The zinc mines, which are in the hands of two parties, yielded 2,833,841 poods of calamine (silicate and carbonate), of which 1,685,300 were from the crown mines (leased) and 1,175,181 from the Boleslaw mines of the Sosnowice Co.

Spain.—The exports of zinc ore in 1897 were 41,040 metric tons, an increase of 5164 tons; those of metal were 2170 tons, a decrease of 1390 tons. The production of zinc ore diminished, however, having been 60,000 tons in 1897, or 4828 tons less than in 1896. The decrease was in the output of the Real Compania Austriana, which reports 20,000 tons from the Reocin mines and 7200 tons from Udias and La Florida, or 4000 tons and 25 tons, respectively, less than in 1896.

THE SPELTER MARKETS IN 1897.

New York.—In our last report we pointed out that during 1896 prices had been exceptionally high on account of the combination of some of the Western smelters controlling about one-half of the output of spelter in Missouri, Kansas, Illinois, etc. The same conditions ruled for the larger part of the year under review, and repeated efforts were made to more closely weld the interests and induce outsiders to join, but in the end they all proved futile, and, with the close of October, the existing agreements expired. It is true that, thanks to the existence of this combination, a higher range of values was established for spelter than would otherwise have probably been the case, and had the smelters, who acted independently, not used their counterweight, undoubtedly prices would on the average have been higher than they were.

Consumers were all familiar with the conditions above outlined, and throughout the year kept very small stocks, thus, to a very much larger extent than is usually the case, throwing the burden on the producers. In consequence thereof, the latter had at times to carry very heavy stocks, and the only means they had of relieving themselves from time to time and upholding the unnaturally high prices in the United States was to export their surplus, which had frequently to be done at a sacrifice of from 10 to 12½%. Another direct consequence of the policy pursued was a further and rather important enlargement of the production

---

* Zap. imp. russk. techn. obschtsch. 1897, 31, No. 8, page 7.

and the starting up of several new works, while several of the older works controlled by the combination were idle.

The production of spelter in 1897 was entirely too much for the consumption of the United States, and large proportions thereof will have to be exported in the future if the present output is maintained. It may therefore be reasonable to expect that the foreign and home markets will be more on a parity, at least until the time when the consumption of the United States will become very much larger than it is at present.

The galvanizing trade, on the whole, was satisfactory, and spelter for this purpose was in good demand, especially after midsummer. For brass the consumption was all that could be desired, but the sheet-zinc business proved to be rather irregular and was not quite up to the mark. At various times round quantities were shipped to Europe, and especially at the end of the year, when, since the parity of the two markets seemed established, large quantities were sold, partly for immediate shipment and partly for export early in 1898.

The price in January opened at 3¾c. St. Louis and 4c. New York, but soon eased off to 3.70c. and 3.95c. respectively, which figures were maintained until the beginning of March. The galvanizing business then becoming better, prices advanced to 3.90c. St. Louis and 4.15c. New York, remaining thereat until May, when the business outlook in general improved. Heavy quantities were then exported, and prices advanced to 4c. St. Louis and 4.25c. New York, followed in June by 4.10c. and 4.30c., which were the top values of the year.

From August on, prices sagged, and in September 4c. St. Louis and 4.20c. New York were reached, which figures were kept up until the end of October, when the combination was dissolved. Then the market became rather irregular and flat, and prices gradually declined during November and December, until before the holidays they reached 3.70c. St. Louis and 3.90c. New York, which were the closing figures.

AVERAGE MONTHLY PRICES OF SPELTER IN NEW YORK.

Year.	Jan.	Feb.	Mar.	April.	May.	June.	July.	Aug.	Sept.	Oct.	Nov.	Dec.	Year.
	Cts.	Cts.	Cts.	Cts.	Cts.	Cts.	Cts.	Cts.	Cts.	Cts.	Cts.	Cts.	Cts.
1892	4.69	4.69	4.89	4.68	4.79	4.71	4.78	4.69	4.58	4.41	4.47	4.40	4.63
1893	4.39	4.39	4.28	4.38	4.41	4.27	4.13	3.89	3.69	3.68	3.65	3.80	4.08
1894	3.56	3.85	3.89	3.62	3.47	3.40	3.43	3.38	3.44	3.45	3.36	3.43	3.52
1895	3.28	3.20	3.23	3.30	3.50	3.65	3.75	4.15	4.30	4.10	3.55	3.49	3.63
1896	3.75	4.03	4.20	4.09	3.98	4.10	3.97	3.76	3.60	3.72	3.99	4.14	3.94
1897	3.91	4.02	4.12	4.13	4.21	4.21	4.32	4.26	4.18	4.17	4.03	3.89	4.12

London.—No new feature of interest marked the spelter market at the opening of the year. Good ordinary brands stood at £17 17s. 6d., and special brands at £18@£18 2s. 6d. A slight improvement in value in the first week was lost in the second week, when the demand to which it was due had subsided, and ordinaries fell to £17 12s. 6d.; but before the month closed values rose again to £18 for good ordinaries, owing to scarcity of spot spelter, through the closing by ice of Continental ports and to the better consumptive demand reported from America. February, however, was a very dull month, chiefly owing to the restricted demand for galvanized iron, and the price closed at £17 7s. 6d.@£17 10s. for ordinaries, with specials 2s. 6d. to 5s. higher. In March the value fell to

£17 1s. 3d. for good ordinaries, without anything worthy of note occurring, but it improved early in April, and the better tendency was emphasized by a recovery in galvanized iron, so that £17 7s. 6d.@£17 10s. was recorded for ordinary brands. A quieter time, with easier values, followed, £17 2s. 6d. being the quotation at the middle of May, and it was not till toward the close of June that there was an improvement to about £17 6s. 3d., the coal strike in Belgium having caused apprehensions of restricted supplies from that quarter. This factor proved of only transitory influence, but then the big engineers' strike began to make its depressing effects felt on all metals. Spelter declined to £16 15s., but rumors of labor troubles in Silesia and the withdrawal from the market of the leading producers in that district temporarily stiffened values up to £17 2s. 6d.@ £17 5s. ordinaries, and £17 7s. 6d.@£17 10s. specials; but July closed quiet at £17 and £17 3s. 9d. respectively. August was, on the whole, dull, with only a moderate consumptive demand, but just at the close some active purchasing in England and on the Continent brought about an improvement of about 3s. 9d. per ton. The evident smallness of stocks enhanced the firmness during September, and an active business was done, with the result that ordinaries recovered rapidly to £17 18s. 9d. October brought a reaction to £17 10s., but improved demand at home sent the price up to £17 16s. 3d. again. In November, after a slight relapse, the scarcity of supplies again led to higher values, notwithstanding the comparatively poor demand; £18 to £18 2s. 6d. for ordinaries and £18 2s. 6d. to £18 5s. for specials were the quotations at the end of the third week, the month closing a shade easier. In December the frost interfered with transport of supplies, and the difficulty of getting prompt deliveries stimulated consumers to buy what was obtainable, so that the metal closed steadily at £18 2s. 6d.@£18 3s. 9d. for ordinaries, and at £18 3s. 9d. to £18 6s. 3d. for specials. The market was much steadier than in 1896, the outside range of price variations having barely exceeded 20s., as against about £4 in 1896.

Breslau.—The market opened firm in January and remained so until the middle of February, when American spelter began to appear in Great Britain, forcing the price down to £17 c. i. f. in English ports by July and cutting off the German exports to a considerable extent. The German makers were not, however, seriously affected, since stocks at works were low, and the domestic consumption continued good. At the beginning of October the market took a turn and the year closed with satisfactory prices.

In upper Silesia the new works of the Bergwerksgesellschaft Georg v. Giesches Erben was put in operation about the middle of the year. The production of electrolytic zinc, which was abandoned by the Schlesischen Aktiengesellschaft für Bergbau und Zinkhüttenbetrieb about a year ago on account of defects in the apparatus, etc., was taken up again, although on a smaller scale. The electric zinc works at Duisburg, which produce zinc in thick plates from the residues of a zinky pyrites after burning in kilns for sulphuric-acid fabrication, are increasing their plant. The experimental plant for the electrolytic refining of zinc-silver alloy at Friedrichshütte was exploited with favorable results.

The fluctuations in the price of spelter were as follows: January, 17.50–17.75 marks per 50 kg.; February, 17.80–17.35; March, 17.50–17.10–17.25; April, 17.10–

17.35–17.20; May, 16.90–17.15; June, 17.00–17.10; July, 17.00–16.85–17.15; August, 17.10–17.50; September, 17.50–17.80–17.75; October, 17.60–17.80; November, 17.75–17.80; December, 17.75–18.00–17.80. The official (*oberbergamtliche*) averages were as follows:

	1893.	1894.	1895.	1896.	1897.
First Quarter....	16.00	14.50	12.50	13.50	16.00
Second "	16.00	14.00	13.00	15.50	15.50
Third "	16.00	14.00	13.50	15.50	15.50
Fourth " ...	15.50	13.00	13.50	16.00	16.50

The price of sheet zinc in Germany in 1897 was 40½ marks per 100 kg. The production was about 10% less than in 1896. The works in operation were those at Lipine, Ohlau, Jedlitze, Hohenlohehütte, and Pielahütte, the combined product being marketed by the Schles. Akt. Gesell. f. Berg- u. Zinkhüttenbetrieb. The Kunigunde works were not in operation.

The price of sheet zinc in Austria in 1897 was 27.90 fl. per 100 kg. The business was unsatisfactory, and at the end of the year it was the opinion in the trade that the output should be restricted temporarily. The manufacture of sheet zinc in Austria, as in Germany, is controlled by a combination, to which the works of Tlach & Keil, the Donnersmarck works at Privoz, and the works at Oswiecirn, Waizen-Vacz, and Dzieditz belong. The product is marketed by the firm of Tlach & Keil, and the managers of the Donnersmarckhütte.

PROGRESS IN THE METALLURGY OF ZINC.

BY WALTER RENTON INGALLS.

LAST year developed nothing new in the metallurgy of zinc except in the direction of the electrolytic deposition of the metal from certain solutions, the success of which under proper conditions now seems to be an accomplished fact; and in the treatment of mixed sulphide ores, for which the usual large number of patents were taken out, while at least two processes were put in operation on a large scale. One of these was a failure; the other seems to be successful. This process aims only at the production of zinc oxide, which is then reduced in retorts in the usual manner. Notwithstanding the successful production of electrolytic spelter at certain places, there is no reason yet to believe that these methods might be more economical than distillation for the ores of ordinary grade and purity that are smelted in Belgium, Rhineland, Silesia, etc.

Numerous processes for the electrolytic recovery of zinc from its ores, especially from mixed sulphides, have been devised, but most of them have never been tried on a commercial scale, and the few that have been actually in operation have been for the most part abandoned. One of the most extensive experiments of this kind ever undertaken was tried last year in New South Wales, where works costing upwards of £200,000 were built for the application of the Ashcroft process. Electrolytic zinc was produced regularly at one works in England and at three in Germany.

The English works are situated at Winnington, near Chester, and are owned by Brunner, Mond & Co. They employ the Hoepfner process, involving the electrolysis of a zinc-chloride solution, from which, besides the zinc, chlorine is recovered for the manufacture of bleaching powder. According to Dr. Hoepfner an output of 5 kg. of zinc and 15 kg. of bleach are realized per horse-power per day. As at present carried out the cost of production is less than the value of the zinc, the entire product of bleach being free. Dr. Hoepfner is making improvements, however, whereby he expects that 1 h.p. will produce 12 kg. of zinc. Ores with as much as 45% zinc have been treated successfully at these works. The spelter produced is of exceptional purity, containing only about 0.01% of iron. The output in 1897 was about 800 metric tons.

The Chemische Fabric Führfort, also employing the Hoepfner process, treates a zinky pyrites which averages about 10% zinc. The production of zinc at these works in 1897 was 400 metric tons. The Elektrochemische Zinkwerke at Duisburg, employing the Dieffenbach process, has been making about 90 tons of zinc per month. Zinc was also produced electrolytically by the Schlesische Akt. Gesell. für Zinkhüttenbetrieb at its works at Lipine in Upper Silesia.

The production of electrolytic zinc by the Ashcroft process in New South Wales was 150 long tons. The company furnished the following analysis of the product: Zinc 99.23%, lead 0.35%, copper 0.07%, iron 0.23%, total 99.88%. It is to be observed that this zinc is very much inferior in quality to the electrolytic zinc which has been made in Upper Silesia by the Nahnsen process, itself inferior to some of the spelter made in the United States by direct distillation of ore.

The works of the Sulphide Corporation (Ashcroft process) at Cockle Creek were put in operation early in the year and ran in a spasmodic, experimental way until autumn, when the leaching department was closed down. The lead furnaces have been kept in blast, however, working on the same process that is used at the other smelting works at Broken Hill, namely, roast reduction smelting of zinky galena concentrates with the production of a slag high in zinc.

The production of zinc by this company has been very small, and the process is now generally regarded as a failure. It has not yet been given out publicly wherein the chief difficulty was found. According to one report it was in the deposition of the zinc, which is not unlikely, but it is equally probable that important difficulties were encountered in other stages of the process.

The Ashcroft process and the works of the Sulphide Corporation at Cockle Creek, N. S. W., were described by Richard Threlfall.* The roasted ore was leached in shallow vats with a solution of ferric chloride containing about 10g. iron per liter together with an equivalent of sodium sulphate. The zinc goes into solution as chloride according to the equation:

$$3ZnO + Fe_2Cl_6 + 3H_2O = 3ZnCl_2 + Fe_2(OH)_6.$$

Some of the iron and manganese together with a small amount of silver are dissolved together with the zinc. The sulphate of soda keeps the lead from going into solution. Any basic sulphate of zinc which may be present is decomposed into zinc oxide and normal zinc sulphate, the latter going into solution as such. The process of solution was found to be slow owing to the precipitate of ferric

---

* "Silver Sulphides of Broken Hill," a special edition of the *Australian Mining Standard* of January 20, 1897.

hydrate which is formed immediately and protects particles of zinc oxide from contact with the lixiviant. An excess of ferric chloride is to be avoided, else there is a tendency to the formation of ferric oxychlorides. The leaching was continued until the solution contained about 30 grams of zinc per liter.

The zinc solution having been drawn into purification vats, steam was first blown into it, and a small quantity of bleaching powder was then added to convert any ferrous iron to ferric, after which a small quantity of zinc oxide was introduced to bring down the remainder of the iron. The solution was then filtered, and the precipitate was added to the residue from the leaching vats, which went to the lead blast-furnaces. The purified liquor, which still contained silver and traces of other metals, was treated with zinc gray, which precipitates all the impurities except alumina and manganese, these doing no harm in the electrolytic vats if not present in large amounts. The precipitate from the second filtration being rich in silver went directly to the refinery.

In the electrolytic vats the purified zinc-chloride solution flowed as katholyte past zinc cathodes made of thinly rolled zinc. It returned over iron anodes, where it took into solution the ferrous equivalent of two-thirds of the zinc deposited. Finally it passed as anolyte over carbon anodes, where it took up chlorine equivalent to one-third of the zinc deposited. It was not possible to dezinkify completely the solution in this manner, and it was not found expedient to exhaust it to the extent of more than 12 g. of zinc per liter. Consequently the ferric chloride solution which returned to the leaching vats contained a good deal of zinc. The reactions which occur in the electrolytic vats are expressed as follows:

$$ZnCl_2 + Fe = FeCl_2 + Zn;$$
$$ZnCl_2 + 2FeCl_2 = Zn + Fe_2Cl_6.$$

In practice it was found advisable to keep a good deal of combined sulphuric acid in solution, which was accomplished by the addition of sodium sulphate. The leaching of the ore and the electrolysis were conducted at ordinary temperature. The deposition of the zinc went on best when the solution was basic, and to provide for this zinc oxide was added to the purified solution before it went to the electrolytic vats.

The works erected at Cockle Creek are described in great detail in the paper referred to. Since, however, the process had not been put regularly into operation at that time, and there were subsequently numerous changes in the works and apparatus, it has not been considered advisable to give a complete summary of them here. It is sufficient to say that the vats, which were 6 ft. long and 6 ft. wide, were made of California redwood, each vat being divided by partitions of wood and canvas and containing 52 anodes and 48 cathodes, all in parallel. The anodes, whether of zinc or carbon, were 4 ft. long and 1 ft. wide. The cathodes were of the same size. They were made of rolled zinc 0.04 in. thick. Zinc was deposited on each side of them.

The leaching vats were circular, 18 ft. in diameter and 6 ft. deep. The ore was agitated during the leaching. The charge having been leached, which required about two hours, it was sluiced to a filter situated at a lower level. The ferric hydrate produced in the leaching vats is at first markedly soluble, and it is only after about an hour that it deposits to any considerable extent upon the ore. The leaching left about 8% of the zinc in the ore.

The Smelting Co. of Australia erected extensive works near Lake Illawarra in the southern coal-mining district of New South Wales, and began operations in 1897; but so far only silver-lead ores have been smelted, chiefly from Broken Hill, and no attempt at recovery of their zinc contents has been made, although part of the machinery for this purpose is said to be on the ground. The Marsh & Storer process of precipitating zinc as oxide by magnesia from a sulphate solution is to have a practical trial at these works.

The Fry process for the treatment of mixed sulphide ores was put in operation on a large scale at works near Swansea, where about 16,000 tons of Broken Hill ore, containing from 20 to 35% lead, 25 to 30% zinc, and about 30 oz. silver per ton were treated. The works are now running regularly at about 400 tons per week. In this process the calcined ore is mixed with about 25% of salt-cake before withdrawal from the furnace. The salt-cake, melting quickly, agglomerates the ore, which is then smelted in an ordinary blast-furnace together with a small amount of oxide of iron (1 ton oxide of iron to 8 tons sulphide ore). The smelting goes on very rapidly and the slag is very fluid. About 90% of the lead contained in the ore is reduced, collecting the whole of the gold and most of the silver, as in ordinary lead-smelting. About 90% of the zinc goes into the slag. The latter is mixed with a small quantity of fine coal and heated in a Siemens gas furnace, whereby the zinc is driven off as oxide, containing about 64% zinc and forming a product suitable for reduction to spelter. About 80% of the zinc contained in the slag, or 72% of the amount contained in the raw ore, is recovered as oxide. Obviously the success of this process depends chiefly upon a cheap supply of salt-cake. In Great Britain this is obtainable at about 18s. per ton, which is equivalent to 4s. 6d. per ton of ore treated.

According to the prospectus of the Smelting Corporation, Limited, which was brought out at the end of March, 1898, to take over the works and patents of the Burnham Syndicate, Limited, which had previously been exploiting the Fry process, the plant at Swansea has been in operation for nearly two years, but continuous work did not commence until after January 31, 1897. During the 11 months ending December 31, 1897, there were treated 10,872 long tons of ore at a profit of £9522, exclusive of the profit to be obtained by desilverizing the lead. These results were attained in works that were ill adapted to the process. The ore treated averaged 31.8 oz. silver per ton, 26.3% lead, 26% zinc, and 1.5 dwt. gold per ton. The process as carried out at these works was investigated by August Raht, whose reputation as a metallurgist is well known. He estimated that the cost of treatment per ton of ore would be £2 4s. 8d., and that a recovery of silver, lead, and zinc at the rate of 90, 87, and 70% respectively might be expected.

The Fry process was also tested at the works of the Compagnie Française des Mines et Usines d'Escombrera, Bleyberg, where about 60 tons of ore were treated with an average extraction of 87% of the lead and 92.5% of the silver. Practically all of the zinc passed into the slag, but the zinc was not extracted, the company being unprepared for the treatment of this material.

The problem of zinc-winning by means of the blast-furnace, which has been the subject of much investigation in the past, has now been taken up by R. H. T. Biewend. The chief difficulty which has been encountered by other experimenters in this direction has been in the condensation of the zinc in liquid form, the tendency of zinc vapor diluted with a large volume of air being towards condensation as dust. Biewend's idea is to enrich the vapor issuing from the throat of the furnace by re-volatilization of dust previously deposited. Although the process has not yet been applied on a working scale, it is sufficiently novel in its conception to merit description. It comprises the use of condensers filled with porous or rough bodies, or provided with other devices that serve to dry-filter the gases, the arrangement being such that the gases are caused by suitable reversals to pass alternately in opposite directions through the chambers. When a certain amount of dust has been deposited a valve is operated to reverse the direction of the gases in their passage through the chamber. The gases now pass at their highest temperature and with the highest percentage of contained zinc into that part of the chamber which has, up to now, been the hindmost part, and impinge upon the dust that was therein deposited, and act to re-volatilize it, and by agglomeration with fresh globules of zinc to convert the dust into drops. Again, after a certain period has elapsed, there will be deposited at the other end of the chamber a sufficient amount of zinc dust which is recovered in the same manner—that is to say, by again reversing the gases, namely, by causing them to pass again in their original direction. By this reversal of the direction of flow of the current of gas being repeated at certain intervals of time, too great a deposit of dust which would otherwise choke up the chamber is prevented, and the gases are also enriched by means of the dust which is deposited at their point of entry into the condenser. The apparatus shown in Figs. 1 and 2 comprises two chambers A, A^1 which communicate at their lower ends, and are charged with condensing material. The gases entering by the pipe B are directed by the flap valve alternately to the one or other chamber, while the exhaust gases escape through the flue B^1. The zinc can be discharged at m. Figs. 3 and 4 represent two separate furnaces with a condenser between them, one furnace being heated up while the other is in operation. Each furnace is provided with two sets of blast tuyères, and when zinc is being produced in the furnace A the working is as follows: The blast through C'' being shut off, the blast supplied from the main D enters at the tuyères d at the lower part of the furnace, whereby fusion is there effected, the metal being tapped off at z. The top of the furnace being closed by valves, the gases produced pass through the outlets into an annular chamber h filled with wood charcoal, in which condensation of the zinc commences, and whence the gases and the liquid zinc pass into the condenser K, which is also filled with wood charcoal, the zinc being drawn off at m. The gases pass through the flue o to the blast tuyères C^1, and enter furnace A^1 along with the blast from the main C'', and are burned. After a certain time the direction of working is reversed, so that the current of gas flows from the furnace A to the furnace A.*

S. Ganelin patented a dry process for treating zinc-lead sulphide ore which con-

---

* English Patent No. 30,152, Dec. 31, 1896. "Procédé de fabrication du zinc au moyen des gaz zincifères, et son application aux procédés connus." By R. H. T. Biewend, *Moniteur Scientifique*, 674, Feb., 1898, p. 180.

sists in stirring the ore into a bath of zinc chloride whereby the lead sulphide is converted into chloride and a corresponding amount of zinc sulphide is precipitated, a separation being thus effected. The lead is subsequently precipitated by metallic zinc and the original amount of zinc chloride is regenerated.[*]

M. Liebig[†] of Neumuhl-Hamborn proposes to treat zinc blende ore by heating it in a revolving furnace and then adding in the same furnace a quantity of highly heated molten iron, which is supposed to desulphurize the blende as well as any galena and other sulphides that may be present, forming an iron matte which can be tapped from the furnace while the metallic zinc set free is volatilized, drawn off from the furnace, and condensed in suitable chambers.

Fig. 1.

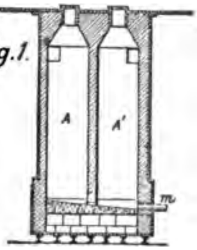

Fig. 2.

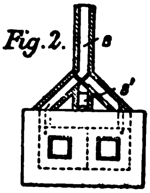

Fig. 3.

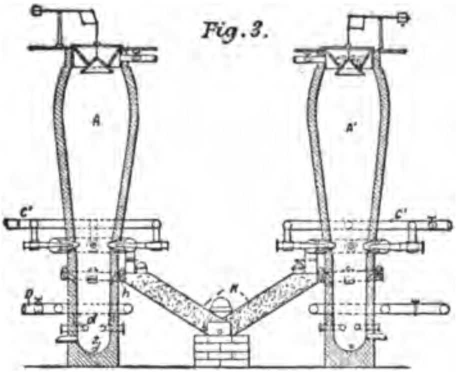

Dieffenbach wins at the same time zinc from alkaline solution and alkaline carbonate from alkaline sulphate. He uses an electrolytic vat divided into three sections by diaphrams. The cathode chamber contains strongly alkaline zinc solution, while in the middle and in the anode chamber there is alkaline sulphate solution. During the electrolysis, which takes place at 35 to 40° C., zinc oxide is added to the cathode chamber, and the sulphuric acid becoming free in the anode chamber is neutralized. In the middle chamber free alkali is formed which is concentrated by alternate crystallization and electrolysis of the solution.

Siemens & Halske's latest process consists of the treatment of the dry ore (blende, or blende mixed with galena) with chlorine gas until chlorination is complete, solution of the chlorides in water, or water to which a little NaCl or HCl has been added, and electrolysis of the solution between an insoluble anode and a metallic cathode, whereby metallic zinc is precipitated and chlorine set free, which is used for the treatment of a fresh lot of ore. Lead goes partly into the

---

[*] U. S. Patent No. 593,415, Nov. 9, 1897.

[†] D. R. P. Class 40, No. 98,343.

solution, but silver remains with the insoluble residue. It is never advisable to carry on the electrolysis so far as to effect complete decomposition of the chlorides on account of the cost of the electrical energy; for this reason an excess of chlorine is provided in the solution by the addition of common salt. The undecomposed chlorides are not lost, however, since the nearly spent solution from the electrolytic vats is employed as lixiviant for fresh lots of ore.

E. A. Ashcroft patented a process for stirring zinc oxide in a concentrated solution of zinc sulphate until a paste is formed, which is then dried and heated to drive off the sulphuric and sulphurous acid gases. The advantage of mixing in the zinc oxide instead of heating the zinc sulphate alone is not apparent.[*]

E. A. Ashcroft also patented a process for the preparation of zinc oxide from zinc sulphate, by heating with an admixture of carbon, when the reaction $ZnSO_4 + C = ZnO + SO_2 + CO$ is presumed to take place. This reaction, of which the efficacy is doubtful anyway, is so old that one may wonder that a patent based upon it should have been allowed.[†]

E. T. Turner proposes to treat the raw ore with hydrochloric acid, and recover the zinc from the chloride solution.[‡] In another patent he proposes to roast the ore, either alone or with carbon, in a current of superheated steam, with the production of zinc oxide and hydrogen sulphide. The latter is burned to sulphurous anhydride, which is brought into contact with the roasted ore, mixed with water containing salt falling down a tower, whereby the zinc oxide is converted into sulphite which may be leached out with water. The zinc is precipitated as sulphide by means of hydrogen sulphide.[§] Such a process is quite impracticable on a working scale. The zinc oxide in the roasted ore might as well be treated directly with sulphurous acid obtained in an ordinary roasting. There is no advantage in roasting in an atmosphere of steam, while there is a good deal of disadvantage in roasting in this way if air is present, since then the tendency is to the formation of sulphates. The formation of zinc sulphite by subjecting zinc oxide to the action of sulphurous acid is by no means satisfactory. With respect to the precipitation of the zinc it may be mentioned that zinc sulphide is a nasty precipitate to deal with.

T. Parker and J. Pullman propose to treat the raw ore with hot concentrated hydrochloric acid. The zinc chloride solution, after precipitation of any lead and iron with which it may be contaminated, is neutralized with zinc carbonate and electrolyzed, being kept neutral during the electrolysis.[‖]

G. Harmegnies proposes to prepare zinc oxide from zinc residues by dissolving the zinc with hydrochloric acid, precipitating iron with zinc oxide, and finally zinc oxide with magnesia. The mother liquor and waste waters containing chloride of magnesium are concentrated to 1.4 sp. gr. and decomposed at 250° C., the hydrochloric acid and magnesia being used over again.[¶]

J. S. Wallace and J. Castell-Evans propose to smelt the roasted ore with reducing agents to produce metallic lead, after which the temperature is raised to volatilize zinc and zinc oxides. The ores must contain an excess of lead and a proper amount of iron.[**]

---

[*] English Patent No. 16,312, July 23, 1896.

[†] English Patent No. 11,076, May 21, 1896.

[‡] English Patent No. 15,749, July 16, 1896.

[§] English Patent No. 17,299, Aug. 5, 1896.

[‖] English Patent No. 23,543, 1896.

[¶] English Patent No. 23,716, Oct. 24, 1896.

[**] English Patent No. 2981, Feb. 8, 1896.

S. Wojtasiewitsch described a method of winning zinc carbonate from calamine, especially low-grade ores, as, for instance, one containing 16% zinc carbonate, 55 to 60% calcium carbonate, 9 to 10% magnesium carbonate, 6 to 9% iron carbonate, 3 to 5% iron oxide, and 1 to 2% of alkalies. The ore without calcination, finely ground, is treated in hermetically sealed vats with ammonia-water, which dissolves zinc carbonate. With vats 6 m. high and 2 m. diameter, 1000 tons of 12 to 15% ore can be treated in two to two and one-half hours, each ton of ore requiring one ton of 10% ammonia solution. The ammoniacal zinc solution is drawn off and heated, the volatilized ammonia being absorbed in water for further use, while the zinc carbonate is precipitated. If the process is properly conducted the loss of ammonia, according to the inventor, should not exceed 0.2% per day of the total quantity in use. The consumption of fuel is about one ton per 10 tons of ore, while the yield of zinc carbonate is upwards of 75%.*

J. Armstrong † proposes to treat mixed sulphide ores containing zinc by heating with carbonate or nitrate of soda or potash, lime, and carbon in a reducing atmosphere, in a furnace with a sloping bed. The lead is reduced while a slag of calcium silicate is formed above which is a brittle layer of zinc and soda salts. Zinc is recovered from the last by distillation, the residue being leached with water to recover sodium sulphide, which is reconverted into carbonate for further use. The lime slag is also lixiviated with water for the same purpose.

F. Ellershausen ‡ mixes 100 parts of ore with 50 parts of oxide of iron or manganese and 25 parts of carbon and heats to bright redness in a reverberatory furnace. Fumes of lead, zinc, and sulphurous acid are produced which are carried together with the gases of combustion into a chamber, where they are mixed with air and aqueous vapor, whereby zinc sulphate and lead sulphate are formed. The former is separated by solution in water, and the latter, which may contain silver, is put back into the furnace, most of the silver remaining in the slag originally formed there. The resulting mixture of slag and lead compounds is drawn off and treated as an ordinary lead ore. The zinc solution may be treated in various ways, but Ellershausen prefers to add sodium sulphide, precipitating sulphide of zinc.

A company is now erecting works at Swansea for the application of this process. Experiments with Broken Hill ore indicated a fuel consumption on the grate of one ton for three tons of ore, and the cost of treatment is estimated at £1 5s. 8d. It is claimed that most of the silver, together with the gold and copper, and about 2% of the lead and zinc, remain in the furnace residue.

H. R. Angel § mixes the ore with sulphate of soda and small coal and calcines on an open hearth, taking care that the flame does not come in contact with the charge. With imperfectly roasted ores enough zinc oxide to combine with the sulphur is added. With well-roasted ores about 5% of lime may be mixed in. The volatile metals are condensed in proper chambers. The more part of the gold and silver is tapped out with the non-volatile metal which is reduced, the remainder being extracted by adding galena to the molten slag.

E. C. Ketchum ‖ roasts the ore and leaches with a solution containing 25% of

---

* Russ. Priv. 286, Aug. 22, 1897.

† English Patent No. 22,361, Oct. 9, 1896.

‡ English Patent No. 16,808, July 15, 1897.

§ English Patent No. 1084, Jan. 14, 1897.

‖ English Patent No. 24,121, Oct. 19, 1897.

caustic alkali heated to about 210° F., whereby the zinc and lead oxides are dissolved. The solution is drawn off to a vat, where it is electrolyzed with a current of 1.8 volts which deposits the lead but not the zinc, the latter being deposited in a separate vat by a current of 2.1 volts. The lead-depositing vats have carbon anodes placed in an earthenware cell containing pure alkaline solution, so that the lead solution may not come in contact with them and thus produce lead peroxide.

Bernard Mohr[*] fuses the ore with acid sodium or potassium sulphate and leaches with hot water, a small quantity of sulphuric acid being added when necessary. Zinc is deposited from the sulphate solution by electrolysis, and the acid alkali sulphate is concentrated by evaporation for the fusion of a fresh batch of ore.

H. Brewer[†] roasts the ore with common salt and leaches with water the sulphates thus formed. Calcium chloride is then added to convert them into chlorides and regenerate the sodium chloride. The solution drawn off from the precipitated gypsum is evaporated until the sodium chloride can be recovered by crystallization. Finally the solution is electrolyzed for the recovery of zinc and chlorine.

W. J. Koehler[‡] treats the roasted ore with ammonium sulphate and heats to 300 to 500° C., whereby zinc and copper are converted into sulphates and ammonia is evolved. After leaching out the sulphates the copper is precipitated by metallic zinc and the zinc sulphate solution is passed through towers, where it is precipitated as hydroxide by ammonia, and ammonium sulphate is regenerated. When iron is present it must be removed before precipitating the zinc.

Dr. Hoepfner claims that the electrolytic production of zinc from a chloride solution was not accomplished successfully on a commercial scale before the introduction of his process owing to the nature of the cathodes used, and states that such solutions can be electrolyzed economically only by the use of discoidal rotating cathodes, partly immersed in the electrolyte. With such cathodes currents of high density can be used (which is necessary if chlorine is to be recovered at the anode, since otherwise the chlorine evolved would become diffused in the electrolyte and again combine with the zinc) while the zinc is deposited in a solid and homogeneous condition. The apparatus designed for this purpose is shown in the accompanying drawings, of which Fig. 4 is an end elevation of the vat; Fig. 5 a horizontal section on the line *XX* of Fig. 6; Fig. 6 a central cross-section; Fig. 7 a face view of one of the anode cell-frames, illustrating the method of supporting the anodes; and Fig. 8 a similar view of one of the cathode cell-frames.

The apparatus is composed of a series of anode and cathode cell-frames of triangular form. The cross-bar (*f*) of the frame is slotted for the passage of the electrode, and at the apex of the frame are formed two passages (2 and 3) by a cross-partition (4) and a vertical partition (5). In the cross-partition (4) there is a passage (6), that for the anode cell-frames being on the right of the vertical partition (5), while the corresponding passage (6′) for the cathode frames F' is on the left side of the vertical partition. In the corner of the base of the triangle

---

[*] English Patent No. 13,169, July 15, 1896; American Patent No. 588,076, Aug. 10, 1897.

[†] English Patent No. 17,889, Aug. 12, 1896.

[‡] English Patent No. 20,615, Sept. 16, 1896.

there is a passage (7). Furthermore, each of the cell-frames has a passage (8) which communicates with the passage (7), that of the anode frames being on the right, while those of the cathode frames are on the left, as shown in Fig. 5, so that when alternate anode and cathode frames are assembled, with a suitable diaphragm *D* interposed between them, provided with openings corresponding

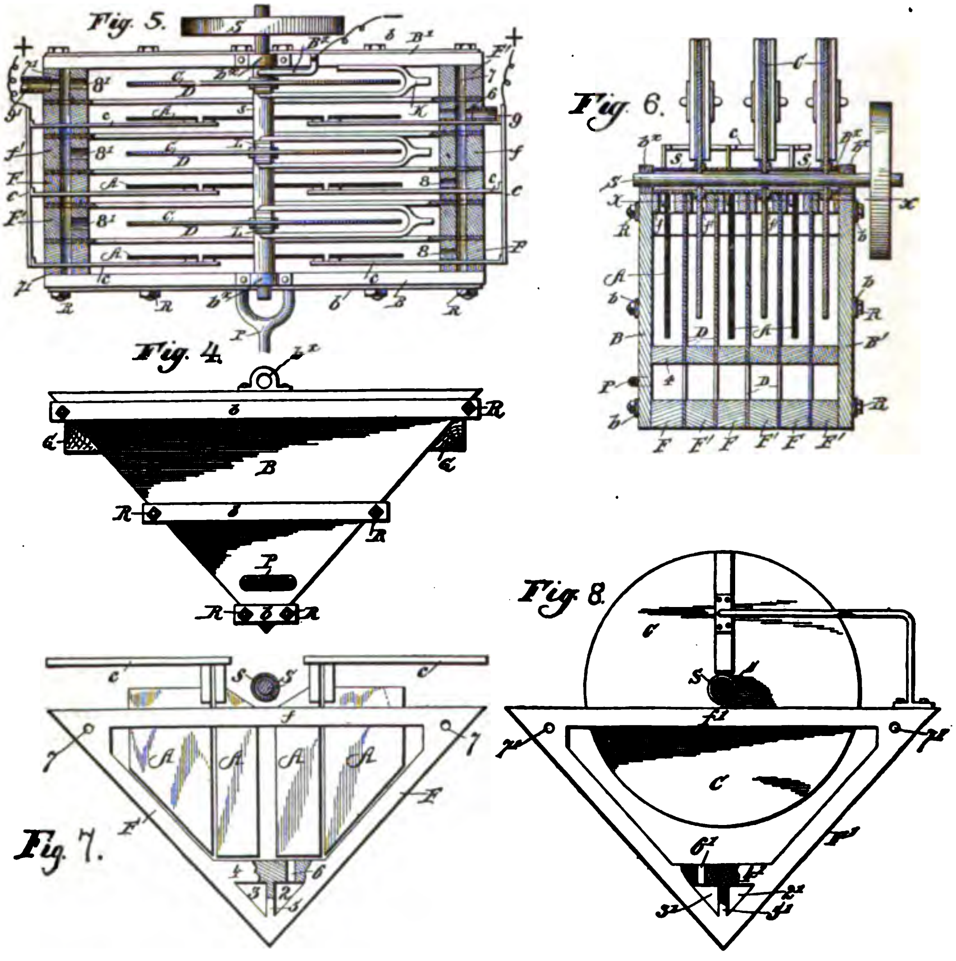

THE HOEPFNER ELECTROLYTIC ZINC DEPOSITING VAT.

with the passages in the respective cell-frames, there will be formed two through-passages at the apex and two through-passages in the opposite upper corners of the frames. The lower through-passages (2) and (3) are connected with a branched feed-pipe *F*, Figs. 4 and 5.

It is obvious that when an electrolyte is fed under a sufficient head through pipe *P* it will flow into the anode and cathode cells through the vertical passages in the respective frames. As the electrolyte rises in the cells and is decomposed, it flows out through passages (8) and (8′) into passages (7) and (7′), and thence out of the apparatus through discharge-pipes (9) and (9′), which pipes are connected with the cell-frame of each series farthest from the supply, as shown in Fig. 5. *B* and *B'* indicate the end boards, of the same configuration as the cell-frames, provided with tie-bars *b*, whose ends project beyond the edges of said boards and are perforated for the passage of tie-rods *R*, by means of which and suitable nuts the cell-frames are tied together.

The construction of the apparatus described is adapted for suspension from girders *G*, thereby dispensing with a base, facilitating the arrangement of a series of apparatus in battery, and the removal of any one apparatus from its support when necessary. The carbon anodes (*A*) may be constructed of a single piece or in sections, which as a whole take the general form of the cells, as shown in Fig. 7, the anode section being supported from conductors *c* electrically connected together, and to the positive pole of a suitable source of electricity, as illustrated in Fig. 5. The end boards are each provided with a bearing for shaft *S*, to which the discoidal cathodes *C* are secured, and to which motion is imparted from any suitable prime motor. As shown in the drawings, the cathodes *C*, of zinc or iron, are held on shaft *S* and suitably spaced by means of conductive sleeves *s*, which are connected by a brush with the negative pole of the source of electricity, the belt-pulley being of course insulated from the shaft.

The separation of franklinite and willemite by the Wetherill process at Mine Hill, N. J., was described by J. P. Wetherill.* The cost of treating 4812 long tons of ore in February, 1897, was 74.54c. per ton, of which 53.32c. was for labor, 8.77c. for coal, and 12.45c. for supplies and repairs to machinery. Out of 30,311 tons separated up to April 1, 1897, there were produced 20,455 tons of franklinite, or 67.48%, 7271 tons of willemite and zincite, or 23.99%, and 2585 tons of tailings. The franklinite assayed 29.47% iron, 13.57% manganese, and 22.94% zinc. The willemite-zincite assayed 2.20% iron, 5.15% manganese, and 48.96% zinc. The grade of the latter varied from 46.5% zinc to 53%, according to the quantity of zincite contained in the ore. The tailings averaged 4.19% zinc. The zincite-willemite concentrate has become popular both in the United States and Europe because the spelter it yields is so free from impurities as to be classed as high grade. The franklinite ore is now used solely for the production of zinc oxide. The ore formerly sent to this process carried from 30 to 35% oxide of zinc, but it is expected that 26% ore will now be used, since it has been found that about the same yield can be obtained from a furnace of given size with 26% ore without silicate of zinc as can be obtained from a 33 or 34% ore with silicate present, because no limestone is required to decompose the silicate and the same furnace and fuel works a larger amount of ore. The separation of the willemite has also resulted in the production from the oxide furnaces of a residuum higher in iron and manganese and lower in silica than heretofore, making consequently a more desirable product for the spiegeleisen furnaces. An analysis of this residuum is: iron, 36.99%; manganese, 15.67%; silicon, 16.23%; zinc, 4.11%; phosphorus, 0.0291%.

The Wetherill machines have been introduced at Siegen, in Germany, for the separation of blende from spathic iron ore. They are employed at the Empire Zinc Works at Joplin, Mo., for removing iron from blende after roasting. In the

---

* *E. & M. J.*, July 17 and 24, 1897.

latter work they cannot of course do more than remove the burned pyrites, and cannot reduce the iron contents of an ore where the iron exists as monosulphide isomorphous with the zinc sulphide.

The method of magnetic separation employed at Monteponi, Italy, was described by M. Ferraris.[*] The apparatus consists of an electro-magnet, beneath the poles of which is a belt traveling at a minimum speed of 0.5 m. per second. The distance between the poles and the belt can be varied from 20 to 50 mm. The polar pieces, which are 0.50 m. in length, have an elliptical section with axes of 60 and 150 mm. They are wound with copper wire of 0.5 mm. square in section. The mineral properly crushed is extended on the belt by which it is carried under the electro-magnet. In order that the magnetic particles may not attach themselves to the poles of the magnet a second belt, traveling at right angles to the first, is interposed between it and the magnet. In this manner the magnetic particles are drawn against the transverse belt by which they are carried out of the magnetic field and are subsequently dropped into a proper bin. The ore treated at Monteponi is a limonite with 4% zinc. The particles may be as much as 10 mm. in diameter. The intensity of the current varies from 0.4 to 2 amp. under a tension of 10 to 50 volts.

METHODS OF DETERMINING ZINC AND CADMIUM.

H. Pellet has found that the ammoniacal salts produced when ammonia is employed in the estimation of zinc in plumbiferous minerals by the Schaffner method to neutralize the acid solution before titrating the zinc with sodium sulphide retain in solution the lead present and so falsify the titration.[†] He has, consequently, substituted potash in that operation, leaving the liquid just sufficiently acid to prevent the deposition of the zinc. The solution is then poured into ammonia, agitated, and filtered, the filtrate being titrated with standardized sodium sulphide, one drop of ferric chloride (20%) solution being added as indicator. By this means the method retains its accuracy even in presence of 40% of lead. It is found that the volume of sodium sulphide solution required per unit of zinc increases slightly with the dilution of the liquid. An important point is to pour the neutralized solution into the ammonia, and thereby obviate the deposition of zinc oxide, which would otherwise have to be redissolved. In dissolving the mineral, the author prefers to oxidize the iron present by means of potassium chlorate instead of nitric acid.

S. Avery and Benton Dales report[‡] that the double oxalate and acetic acid methods for the determination of cadmium are unsatisfactory; the cyanide method yields fair results with relatively large amounts of cadmium, and the formate method yields satisfactory results, provided certain conditions which they prescribe are rigidly maintained.

E. G. Ballard recommends[§] the use of a bright silver plate for determining the end point in the titration of zinc with sodium sulphide solution. If the titration is done with a cold solution, a large excess of ammonia is to be avoided.

---

[*] *Oest. Zeits. f. Berg- u. Hüttenwesen*, 1897.

[†] *Bull. Assoc. Belge des Chim.*, 11 (4), 126–130.

[‡] *Journal American Chemical Society*, XIX., pp. 379-382 and 518.

[§] *Journal of the Society of Chemical Industry*, May 31, 1897.

L. L. de Koninck and Eug. Prost have made an elaborate investigation of the volumetric determination of zinc by potassium ferrocyanide. In summarizing their results they state [*] that the reaction is more regular and its termination more sharply marked if the ferrocyanide is always in excess with respect to zinc, *e.g.*, if the zinc solution should be run into the ferrocyanide. This involves inverse titration, which is not very practicable, or else to titrate back. The latter method has the advantage of showing the approaching termination of the reaction by the diminution of the intensity of color produced by the indicator; for these reasons the authors give preference to this method.

J. Meunier states [†] that the difficulty experienced in collecting zinc sulphide for gravimetric determination is overcome in the following simple manner: The zinc solution, preferably slightly warmed, is precipitated with ammonia, just sufficient of the precipitant being cautiously added to redissolve the hydrate at first formed. A slow current of sulphuretted hydrogen is then passed through the solution until a drop of it, on a white tile, gives a blackish coloration with another drop of a solution of ferrous sulphate. When this occurs the whole of the zinc will have been precipitated, and is in a suitable condition for collection. The passage of the gas is immediately stopped and the zinc sulphide collected, washed, and dried in the usual way. It will be found that the filtrate will at once run perfectly clear, and that the precipitate may be rapidly washed, especially if warm solutions be employed. The presence of large quantities of other salts does not affect the ease and rapidity with which the process may be conducted.

ZINC-DUST.

Zinc-dust, or zinc gray, which is produced chiefly in Upper Silesia, was in strong demand throughout 1897, and at times no supply was obtainable. The price rose considerably. The reason for this turn in the market is to be found in the fact that at the very low prices previously ruling some producers gave up the production, while others in rebuilding their furnaces adopted the Belgium-Silesian system, whereby smaller quantities of zinc-dust are produced. Zinc-dust has, moreover, found several important new uses, among others for the production of zinç-ethyl and for the refining of carburetted-hydrogen oils. The chief consumption, however, continues to be in indigo dyeing. The production of zinc-dust in Upper Silesia amounted to 2060 metric tons in 1895, 1750 in 1896, and 1650 in 1897. Contracts for 1898 were made at considerably higher prices than for 1897.

GALVANIZATION OF IRON.

Further progress has been made in the processes for the electro-galvanizing of iron, and these may now be regarded as commercially successful. The Cowper-Coles process is being worked by four English firms, while in Germany two patented processes are being exploited—Alexander's at Rothenfelde and Richter's at Witkowitz, in Bohemia. One of the chief difficulties in the electro-deposition of zinc is the difficulty of keeping the electrolyte in proper working condition to prevent the formation of zinc sponge. This difficulty has been overcome in the Cowper-Coles process by using insoluble lead anodes and continuously passing the solution through regenerating tanks containing zinc-dust. The other processes

---

[*] *Chemical News* July 9 and 16. 1897.

[†] *Comptes Rendus*, 124 [21], 1151.

use zinc anodes, which are a source of more or less trouble, since a large proportion of the anode, instead of going into solution, crumbles away, fouls the electrolyte, and causes zinc sponge to form on the cathode. Alexander's process differs from the others in the nature of the deposit, which is an alloy of zinc with aluminium or magnesium in place of pure zinc. Apart from these differences, all three processes resemble one another.

CADMIUM.

The price of cadmium rose considerably in the early part of the year, the highest point being reached in July, when the quotation was 2150 marks ($511.70) per 100 kg. The increased demand for this metal which caused the jump in price and excited considerable speculation as to its source proved to come from the state laboratories, which required the metal in large quantities for the preparation of certain alloys. The high price, however, induced the works which were engaged in the production of cadmium to make a larger output, while other works, which had abandoned the recovery of this metal at the former low prices, took it up again, so that before long the production in Upper Silesia was being made at a rate twice as great as but a few months previously. The state laboratories having completed their purchases, the large stocks of cadmium which had accumulated began to press on the market and the price fell off in the latter part of the year, 1450 to 1550 marks being quoted in October. As heretofore, the metal has been sold with a guarantee of 99.5 to 99.75% cadmium. The production in 1897 amounted to about 17,000 kg.

The use of cadmium has recently been proposed for coating the terminals and connections of primary and secondary batteries, for which its chemical inertia as compared with zinc and brass makes it desirable. Its use for coating small shot (for sporting purposes), and steel bullets, in the one case to prevent the leading of the barrels and in the other the corrosion of the steel, has also been proposed.

Cadmium has of late years been extensively deposited as an alloy with silver. Some of these alloys, containing only a small percentage of silver, have been employed for coating the bright steel parts of machines such as bicycles, and a silver-cadmium alloy containing 7.5% of cadmium has been somewhat extensively used for plating domestic articles. According to S. Cowper-Coles* such alloys have been found to withstand the tarnishing influences of the atmosphere much better than pure silver, or a standard silver containing 7.5% of copper.

A silver-cadmium alloy, upon being tested with a Thompson galvanometer, was found to be electro-positive to nickel, there being a difference of more than 0.25 E.M.F.; therefore, if the alloy is used for coating steel, and the underlying metal is at any time exposed to a chance scratch or abrasion, the corroding action of the air and water is more violent in the presence of the nickel than in the presence of the silver-cadmium alloy covering, owing to a more intense electrical action being set up by the nickel. Cowper-Coles has designed a process for depositing the cadmium alloy, which consists of preparing the electrolyte by dissolving the cyanides of the two metals in cyanide of potassium, the proportions of the two metals being varied with the nature of the deposit sought.

---

* Aluminium and Electrolysis, February, 1898.

TUNNEL-RIGHTS UNDER THE UNITED STATES MINING LAW.

BY R. W. RAYMOND.

SECTION 2323 of the Revised Statutes is as follows:

> "Where a tunnel is run for the development of a vein or lode, or for the discovery of mines, the owners of such tunnel shall have the right of possession of all veins or lodes within three thousand feet from the face of such tunnel on the line thereof, not previously known to exist, discovered in such tunnel, to the same extent as if discovered from the surface; and locations on the line of such tunnel of veins or lodes not appearing upon the surface, made by other parties after the commencement of the tunnel, and while the same is being prosecuted with reasonable diligence, shall be invalid; but failure to prosecute the work on the tunnel for six months shall be considered as an abandonment of the right to all undiscovered veins on the line of said tunnel."

THIS is the only provision in the Revised Statutes concerning tunnel-rights. Perhaps it is fortunate that there are no more. Certainly this one is ambiguous and perplexing enough, and additional ones of the same character would have made confusion worse confounded.

In attempting to discuss this provision, and to set forth its interpretation by the courts, I am led at the outset to point out the historic cause of its fundamental defect—a cause which underlies also many other defects of the Act of 1872.

The customs of miners and the Act of 1866 recognized, as the foundation of mining title, the priority of discovery. The Act of 1872, intended to remedy certain evils developed in the administration of the Act of 1866, comprised various provisions for that purpose (provisions, that is to say, which assumed the principle of the former Act, and only modified its application) and also provisions of a totally different character, creating the new principle of apex-rights, and thereby nullifying the customary rights attached to discovery pure and simple. The Act containing this revolutionary innovation was never carefully harmonized throughout, in accordance with the new principle thus established, and presents many features really intended to be parts of the old *discovery*-law (so to speak) and not framed to be parts of the new *apex*-law. This tunnel-section is one of these anachronisms. As an amendment to the Act of 1866, it is, taken by itself, simple and clear enough, though perhaps not wise. As a part of the Act of 1872, it is inconsistent, incomplete, and mischievous.

This statement as to its original purpose will be self-evident upon an examination of its text.

1. It first gives to the owners of a mining tunnel the right of possession to all veins discovered in the tunnel (and not previously known to exist) *to the same extent as if discovered from the surface.* (The limitation to 3000 ft. from the face, and to the line of the tunnel, I pass by for the present.) Now, under the Act of 1866, discovery from the surface gave a right of possession ; and this right could be exercised independently of the ownership or location, by the discoverer, of any tract of land. But the Act of 1872 requires as a prerequisite of the possessory right to a vein the location of a tract containing the apex ; and discovery not accompanied by such a location does not confer that right. It follows that, as a part of the later law, the provision above quoted, literally taken, confers nothing upon tunnel-owners except the right of a surface-discoverer, to make a location on the apex. If A discovers from the surface a lode, but locates his claim, unfortunately, so that it does not include the apex, and B subsequently makes, upon a later discovery of the same lode, a location properly covering the apex, A's prior discovery gives him, under the present law, no rights superior to those of B. All that this section, as thus far quoted, does for C, a tunnel-owner, is to put him in the position of A;—and there he must stay, until he can find the apex of his discovered vein, and locate upon it. Evidently this ludicrous result of the attempt to benefit C by legislation is due to the fact that the provision was framed to fit the Act of 1866, and is out of joint with the building which, while it was being thus mildly tinkered, was also being radically reconstructed.

2. Secondly, this section provides that, during the diligent prosecution of the tunnel, locations made by other parties, on its line, of veins not appearing on the surface, shall be invalid. It is clear that such locations of veins which *do* appear on the surface are not thereby declared to be invalid. On the contrary, they are evidently meant to be valid, if based on prior discoveries. This is simply a recognition of the preceding provision, by which the discovery in the tunnel is put upon the same footing as the surface-discovery. In either case, the inception of title dates from the discovery. This second provision makes a further distinction with regard to "blind lodes," and these only. The discovery of such lodes in the tunnel dates back, as a foundation of title, to the commencement of the tunnel, and therefore invalidates locations subsequent to that date, though based on discoveries actually antedating the tunnel-discovery.

Again we may observe that this provision is consistent and practicable enough with the Act of 1866, and quite out of joint with the Act of 1872. Construed as a part of the former Act, it amounts to this: that a party diligently prosecuting a tunnel for the discovery of new lodes shall have the exclusive right to the fruits of underground discoveries of "blind lodes" within a certain area. For instance, if A is driving a tunnel, and B, sinking a shaft on the line of that tunnel and less than 3000 ft. from its mouth, comes upon a blind lode, before A gets there with his tunnel, B cannot make a valid location of that lode; and when A reaches it, his second discovery of it, dating by relation back to the commencement of his tunnel, will be legally the first discovery, and thus a valid basis for title. At the same time, I repeat, according to the letter of the law, B can validly locate a lode *appearing on the surface* at any time before its actual discovery in the tunnel. The reason for these provisions (considered as simple amendments to the Act of 1866) is plain. They were intended to encourage the driving of deep tunnels, without discouraging surface-prospecting; and to this end, the tunnel-owner received a monoply of the fruits of his underground explorations within a certain preempted field, while at the same time he was not allowed to monopolize the lodes which could be found at the surface. With regard to the latter, he was placed on the same footing as the surface-prospector—priority of actual discovery being the basis of superior title.

But when we look at this provision as part of the Act of 1872, its impracticable character—or else its utter lack of value—becomes evident. For this Act attached to a valid lode-location two new appurtenances. The first is the ownership of the tract embraced in the location—which, as the courts have repeatedly held, is, by the very act of location, withdrawn at once from the public domain. The second is the ownership of all other veins, besides the vein located, which have their apexes within the location; and this ownership vests in the locator at once, before any discovery of the said other veins and without any location of them. Now let us suppose that while A is running a tunnel, B discovers a lode on the suface before the tunnel has reached it, and makes a location on it, as he has, under the terms of this section, a clear right to do. But that location proves afterwards to contain the apex of another lode—a blind lode—which A reaches in his tunnel, perhaps thus making its existence known for the first time. A cannot claim this lode, so far as B's location holds it, because it has been deeded to B already. True, the statute says that a location by B on this blind lode shall be invalid under the circumstances. But B has made no such location. The lode belongs to him by virtue of his perfectly valid location on another lode, to wit, a lode appearing at the surface and first discovered by B. A's special tunnel-right, as part of the present law, seems therefore to be either practically valueless, or to be contradictory to other features of the law. As we shall presently see, the judicial attempts to solve this contradiction so as to leave A something of value have varied according to the choice, between the conflicting principles, of the one which shall take precedence.

With regard to the condition of this subject prior to 1866, Mr. Curtis Lindley says: *

> "We think it may be fairly stated that, prior to any legislation upon the subject by Congress, in popular estimation the purpose of a tunnel-location was that of discovery of blind veins or deposits, whose existence it might be difficult, if not impossible, to establish by surface-exploration, and that such discovery by means of the tunnel should be treated as the equivalent of one made from the surface. As to questions of priority, it was a mere race of diligence. Rights upon the discovered lode dated from the discovery in the tunnel, and not from the date of the tunnel-location. Surface-prospecting within the vicinity of the projected tunnel line was not inhibited. The chances of a successful discovery in many formations were largely in favor of the tunnel method, and this was the inducement for projecting it; but the tunnel locator's privilege was not understood to be an exclusive one within any defined surface-area."

This, I think, is a true picture, except as to the statement that "the chances of a successful discovery in many formations were largely in favor of the tunnel

---

* *A Treatise on the American Law Relating to Mines*, etc. By Curtis Lindley, of the San Francisco Bar 1897, Vol. I., p. 467.

method." That I seriously doubt. The driving of tunnels for discovery has not been generally profitable, so far as I know, apart from the artificial advantage conferred by the law in some cases, of dating the discovery of a vein back to the location of the tunnel. That is to say, if B, C, D, etc., are actively mining from the surface of a mountain upon valuable lodes, and exploring in depth, and if the formation be such as to favor the occurrence of blind lodes in depth, it may be profitable for A to prosecute with "diligence" a tunnel projected to underrun their claims, so as to acquire by virtue of his tunnel-location a prior right to the blind lodes which either he or they may discover. But there was no such privilege as this attached to tunnels before 1872. And, according to my personal recollection, there were very few deep tunnels, if any, run before 1866. It was after that date that the "tunnel-fever" arose in Colorado, and led to the enactment in 1872 of the section we are now considering.

I may say, in passing, that many of the positive faults of the two leading United States mining laws have been due to local interests, seeking protection or advantage without sufficiently regarding the general effect of the legislation sought. Thus the local conditions of the Comstock mines dictated the main features of the law of 1866. In 1872, the mining interests of Colorado were at the front, and the protection of Colorado tunnel-companies was called for. There had been a sudden development of such schemes in that State, due partly to the wide discussion of the Sutro tunnel in Nevada, partly to the recent introduction of machine-drills, cheapening and accelerating the driving of tunnels, and partly to the favorable conditions presented by the precipitous Colorado cañons, between mountains known to contain numerous fissure-veins of rich ore.

I had occasion at an early date to utter a warning against the folly of multiplying tunnels for this purpose. In my report as United States Commissioner of Mining for the year 1870, I observed * that the so-called tunnel-fever had been a noteworthy peculiarity of the operations of that year, particularly in Clear Creek County, Colo. Innumerable tunnels had been located, and much money had been already wasted in attempts to develop thus the "wealth" of this, that, or the other mountain. I pointed out that a tunnel driven to find new lodes must be a cross-tunnel, run wholly in country-rock, and was likely to be the most expensive of all forms of prospecting. Its cost must be not only large but indeterminable beforehand; and experience had shown that an equal expenditure made in surface-explorations would be likely to find many more lodes of value.

Again, cross-cutting may find a lode, but does not determine its value. This requires additional work upon the lode itself, and ultimately, shafts.

The advantage of cheaper transportation through a tunnel is not great enough to warrant its cost. But the advantage of drainage (with or without incidental saving in transportation and ventilation) is often so great as to warrant large outlay in tunneling. This depends, however, on the amount of water to be handled, which, like nearly all other facts determining the advisability of a long adit, can only be known after the extensive development of the mine or mines to be served.

---

* For the full statement here condensed, see "Statistics of Mines and Mining in the States and Territories West of the Rocky Mountains for the year 1870." This report was transmitted to Congress March 16, 1871. My discussion of this subject begins on page 322.

Consequently, deep cross-tunnels should be auxiliary and not primary works; should be run chiefly for drainage; and should connect with the workings of established and productive mines. This is the case in all other countries; and all experience in our own confirms the principle. For such a purpose, one deep drainage-adit is sufficient for a large area; and the multiplication of parallel tunnels at the same level is folly.

I quote from the conclusion of my exposition of this subject in 1870 the following portions:

> "It is almost as absurd to run a cross-tunnel after blind lodes as it would be to sink a shaft at hap-hazard in dead rock. The rights attached to a tunnel-claim, unaccompanied by surface-ownership of known lodes to be pierced, are extremely visionary. The only tunnel-right which would be really valuable, our laws do not give. I mean the right to exact a royalty from mines benefited by the tunnel. This has been granted by contracts and confirmed by legislation in the case of the Sutro tunnel in Nevada, an enterprise which, I need hardly say, as it is connected with the largest, deepest, and most productive mines in the country, does not belong in the category I am now discussing. The tunnel-royalty was, in Europe, for centuries the privilege of every one who should drive a tunnel not less than 30 feet deeper than any preceding one, so as to benefit an overlying mine. I do not say it would be wise to make this provision generally applicable to our mines; but this I do say, that in the absence of some such tangible source of revenue, deep cross-tunnels, underrunning only undeveloped or unknown lodes, or lodes belonging to other owners, are gratuitous folly."

From this general condemnation, certain individual enterprises were excepted by me, in the report above cited; yet even with regard to these, doubts and cautions were expressed, which later experience fully justified. While some of them have not been total failures, I do not think that any one ever did or ever will repay its cost.

The situation thus explained led to the desire, on the part of tunnel-projectors, for some more definite and valuable encouragement to such schemes. The power to exact a royalty for drainage was not asked. At that time, the cost of drainage was oppressive in a few mines only; and a compulsory subjection to royalty on that account would have been unpopular and impracticable. Nor could it be expected that the miners generally would submit to the prohibition of surface-prospecting within a large area overlying a projected tunnel. The *bonus* finally secured was embodied in Section 2323, above quoted, and consisted of the two provisions I have already discussed, the first of which was simply a re-enactment of existing custom, while the second gave, as to blind lodes, a sort of preemption or inchoate right, not previously existing.

Let us now inquire what is the actual effect of this section, as construed by the courts, in connection with the Act of 1872, of which, as I have explained, it was not originally framed to be a part.

1. To the generally loose, clumsy, and incorrect use of English in the Act of 1872, Section 2323 forms no exception. The hand that could write "apex," meaning not a point, nor a line, but the total thickness or cross-area of a vein nearest the surface, and could describe the "extending" of horizontal surface-lines "downward vertically," was quite competent to label a cross-adit "tunnel." Properly speaking, a tunnel is open at both ends. The meaning of this section, however, has never been questioned; and the word "tunnel" has in fact now

acquired among miners this special significance. The section undoubtedly refers exclusively to adits starting from daylight, and running into the mass of the mountain. And while it does not specify cross-adits, it cannot be applied to adit-drifts, or tunnels run in on a vein, and following the vein. For such a tunnel could not discover other veins, being kept within one already discovered.

2. The term "face" is another misnomer. The face of a tunnel or drift is the same as its breast—that is, the area of unbroken rock at its inner end. Taken in this universal sense, the section would give to the tunnel-owner an intolerable privilege, namely, a preemption-right always advancing, and reaching 3000 ft. ahead of the point at which he might have arrived at any given time. But this construction, though required by usage, is so repugnant to law and justice that it has never been urged. There is general acquiescence in the practice of the Land Office (explicitly confirmed, I believe, by the courts), which assumes the face of a tunnel to be the first full exposure of its height and width after entering under cover.

3. The "line" of the tunnel is not so misleading a term, though sufficiently obscure. It has been authoritatively construed to mean the space between the sides of the tunnel, throughout the length of 3000 ft. from its face in the direction claimed.

4. The manner of making a tunnel-location on the ground, and otherwise perfecting it, is not prescribed by the statute directly. But the General Land Office requires that, as soon as the tunnel enters cover, the locator shall post at the "face" a notice containing the names of the parties, the actual or proposed direction of the tunnel, its height and width, and the course and distance from the face to some prominent landmark. This notice, together with an affidavit of certain facts and of the intention to prosecute the work with diligence, must be filed for record, like the notice of a lode-location. Moreover, the "boundary lines" of the tunnel are to be established by stakes and monuments, at proper intervals, from the face to the terminus of the 3000 ft. of length. This last requirement seems almost absurd. The law mentions only the "line" of the tunnel; and this line, one would think, could be sufficiently shown by monuments along the axis. It is hard to see any use in staking out a parallelogram 3000 ft. long and, say, 8 ft. wide.

There is, indeed, some reason to believe that the original idea of the framers of Section 2323 was that a tunnel-locator might lay out a tract 1500 feet wide (*i.e.*, 750 ft. on each side of the tunnel) by 3000 ft. long, as the area within which other locations should be invalid, while he continued to work. If I remember correctly, this was the view entertained in 1872 by some enterprising Colorado adventurers, who undertook, by marking off tunnel-locations side by side, along the foot of a mountain, to monopolize a large amount of mineral ground. The public indignation aroused by this attempt resulted in a hasty retreat from the position, and in a letter from the Commissioner of the General Land Office, addressed to Senator Chaffee of Colorado, Sept. 20, 1872, which declared :

"The line of the tunnel is held to be the width thereof, and no more, and that upon this line only is prospecting for blind lodes prohibited while the tunnel is in progress, and that the right is granted to the tunnel-owners to 1500 ft. of each blind lode, not previously known to exist, which may be discovered in the tunnel; but that other parties are in no way debarred from prospecting for blind lodes or running tunnels so long as they keep without the line of the tunnel as herein defined, the said line being required by our regulations to be marked on the surface by stakes or monuments placed along the same from the face or point of commencement to the terminus of the tunnel-line aforesaid." *

5. With regard to location upon a lode discovered in a tunnel, the Land Office has held that no patent can issue without a surface-location, and that this location must include the apex. This view, which has been followed in some judicial decisions, and which Mr. Curtis Lindley, in the treatise already cited, maintains with much force and clearness, seems to me to satisfy fully the text of the provision that the tunnel-owner shall have the right of possession "to the same extent as if discovered from the surface." For under the present law, a surface-discovery gives no other right than that of location. The discoverer must locate a claim; and if he locates so as not to cover the apex, his priority of discovery will not cure that defect in his title.

But the United States Supreme Court, in a recent case (Campbell *vs.* Ellett, 167 U. S.), has adopted the rule that a failure to mark on the surface the boundaries of a tract claimed will not destroy the right of the tunnel-owner to veins discovered in the tunnel, provided he posted proper notices at the mouth of the tunnel, and filed them in the office required by the local statute. In this decision, the preponderance has been given to the principle of discovery over the principle of the apex-law; and the result is going to be a very perplexing confusion in many cases. But I will not stop here to point them all out. The mention of a single example will suffice. The law gives to a locator on the surface, rights in all lodes apexing within his location, whether blind lodes or not. Such a location, made before any tunnel was commenced, would undoubtedly be valid against the tunnel. If a blind lode first struck in the tunnel should prove to have its apex within such a prior and valid surface-location, and therefore to have been withdrawn from the public domain before any tunnel-rights existed in the premises, the tunnel-owner could not claim it. Yet if he is not bound to make a surface-location including the apex of the vein he claims, how can any one know whether it is lawfully claimed by him or not?

6. The tunnel-owner's right of possession dates by relation back to the time of location of the tunnel-site. This rule, I cannot but believe, will have to be modified in some cases hereafter. Taken together with the following, settled in the same case (Enterprise *vs.* Rico-Aspen, 167 U. S., 108), it produces a strange result.

7. The questions, how many feet along a vein discovered by tunnel may be lawfully claimed, and whether this length must be equally on both sides of the tunnel, have been differently answered in the State courts. But it is useless to consider the ingenious solutions thus offered, now that the United States Supreme Court, in the case just cited, has held that the location of a claim to a vein discovered in a tunnel may be made on its discovery by taking the full length of 1500 ft. allowed by United States Revised Statutes, Section 2320, on either side of the tunnel, or any such proportion thereof on either side as the locator may desire;

---

* *Copp's United States Mineral Lands*, 2d edition, "Land Office Rulings," p. 90.

and is not limited to 750 ft. on each side of the tunnel on account of a failure to indicate, when the tunnel was located, what particular 1500 feet he would claim.

This presents the remarkable situation that the tunnel-owner, by simply locating his tunnel, fixes the date of his title to property yet undiscovered, but that he need not decide where he will place his claim upon it until actual discovery. In other words, a width, not of 1500 ft., the maximum length of lode-claim allowed by law, but of 3000 ft., is set apart for his optional occupancy of any 1500 ft. of continuous vein-length within it. Nobody can go safely into that dangerous zone until the tunnel-locator shall have made his discovery and exercised his option. Moreover, it seems to follow that, even after a tunnel has passed through the course of an intersecting vein, without "discovery" of it, the tunnel-owner, guided by developments made by surface-explorers outside, may go back, hunt again, find what he wants to find, and date his "discovery" back, so as to take the bonanza developed by others. If this is not locking up the public domain against exploration, it is difficult to see what would deserve that title.

Here again the Supreme Court has given predominance to the wrong principle. And its ground (like the ground of some similar decisions below) seems to be that the absurd and exceptional privileges conferred by this construction upon tunnel-owners are justified by the wisdom of encouraging deep tunnels. As I have already explained, such tunnels, for exploration only, are generally foolish, and ought not to be encouraged. There is some reason to fear that the latest construction of the "tunnel-section" of our law will help to encourage schemes of blackmail, and delusive schemes of speculation. We have seen already in certain pompous prospectuses some of its fruits. It constitutes, in my judgment, a new danger to legitimate industry without opening any real chance for legitimate investment. Still, it is now confirmed as the law by the highest authority; and mine-owners must meet the fruits it may create for them.

As a legislative remedy for the evils thus inflicted upon mining by Congress and the courts together, I can think of nothing better than the simple abolition of Section 2323 of the Revised Statutes.

The owners of lode-locations made before the location of any tunnel projected to underrun them may, I think, even under the extreme views recently announced by the Supreme Court, rest secure in their possessory or patented titles. To those whose locations are of later date than the location of a tunnel which does, or will, underrun them within 3000 ft. from its mouth, I would say:

1. Watch for a chance to buy out the tunnel-claim, if you can. This is likely to be the cheapest way out. Moreover, if your mine is valuable, and if you are likely to be seriously troubled with water, the tunnel may be worth to you, in the end, all that it costs you to buy it and extend it, quite apart from its bearing upon your title.

2. If there be no tunnel threatening to underrun your property, locate and start one at once. The "diligence" of prosecution required by the law is not an onerous burden, compared with the cost of fighting pirates. Moreover, such a tunnel might be started by an agent of all the surface-owners, under an agreement for the equitable adjustment of costs and benefits.

3. If you have to face a fight with a tunnel-owner, asserting ownership of the

ground you are working, and basing his claim on an alleged discovery in his tunnel, dated back to the original location of the tunnel, you have still a good deal of fair fighting-ground.

a. You can thoroughly overhaul the history of the tunnel, and possibly show that it has not been "diligently" prosecuted. On this point the requirement of the United States law is very lenient. But, in fact, it is not really a requirement, but only a limit set to the leniency of local legislation. The laws of the States may be much more severe in their definition of "diligence."

b. If your location, though made after the location of the tunnel, was properly made on a lode appearing at the surface, and not yet discovered in the tunnel, I think it is valid, and secures to you, not only the ownership of the located lode, but also that of all other lodes, blind or otherwise, apexing within your ground. This opinion seems to contradict the sweeping dictum of the United States Supreme Court in the Rico-Aspen case, cited above; but I do not think the precise situation here stated was clearly before the court; and, at all events, I think there is still a good fighting chance for its recognition. I need not argue at length my grounds for this opinion. The chief one is that neither the statutes nor the rules of the General Land Office prohibit the location in ground traversed, or to be traversed, by a tunnel, of lodes appearing at the surface, and that, with regard to *such* lodes, at least, the tunnel-discoverer is explicitly endowed with the same possessory rights—no more and no less—as the surface-discoverer. But these rights include the possession, upon location duly made, of other lodes than the one explicitly located upon; and (within the boundaries fixed by the end lines of the location) all title to all the said lodes is, by the act of location, vested in the locator, and tract and lodes are thereby withdrawn from the public domain. In view of these considerations, I think the case I have stated presents good fighting-ground; and I wish that this issue, free from all others, could come before the United States Supreme Court; for I believe that thoroughly impartial (though, in the difficult interpretation of our amazing mining law, not always thoroughly intelligent and foreseeing) tribunal would find a way to reconcile the letter of the statute with its equitable administration. And, with regard to the particular point just stated, I believe this all the more confidently because, as to this point, the strict literal construction of the statute seems to me the most just and reasonable that can be given to a confessedly obscure phraseology.

PROGRESS IN ORE DRESSING IN 1897.

By Robert H. Richards.

Ore dressing deals with the mechanical concentration to which ores are subjected before their metallic constituents are extracted by smelting or other metallurgical process.

Since the smelting process is expensive, ores that are smelted without concentration may cost more than the metal contained in them is worth. To overcome this difficulty, and to substitute profit for loss, the processes of concentration have been developed so that the values contained in several tons of ore may be concentrated into one ton, proportionately enriched, and the cost of smelting be thus correspondingly reduced. The methods of concentration depend upon certain properties of minerals, of which the following are the most important:

Structure and cleavage, which influence the shapes of the particles resulting from crushing, some breaking into rounded or cubical forms, and others into flat shapes. These forms have an important bearing on the power of the grains to settle in water.

Mineral Aggregation.—When the minerals occur in large crystals it is comparatively easy to separate the valuable from the waste by breaking and segregating them; but if the minerals sought for are finely disseminated in the waste rock the separation becomes more difficult.

Hardness, Tenacity, and Brittleness.—The harder the minerals the greater the wear on the crushing machinery. Certain minerals, such as talc, gypsum, and native copper, though soft are very tough, and are therefore not easily broken. Others, such as certain varieties of quartz, though hard are very brittle. These tend to form a large amount of slimes, from which it is difficult to extract the values, because they do not readily settle, either in water or in air.

Specific Gravity.—Differences in specific gravity furnish the most valuable means of separating minerals. Nearly all the concentrating machines are based primarily on this principle.

Adhesion.—A clean particle of gold that has become coated with mercury adheres to an amalgamated copper plate, and is thus separated from the quartz with which it was associated.

Magnetism is utilized for the enrichment of some kinds of iron ore, and also for certain other special problems.

Porosity.—Certain minerals, such as pyrite, become porous by roasting. Their specific gravity is thus decreased, and they can then be separated from minerals from which they could not be disassociated previously.

Greasiness.—When minerals are finely divided they are apt to act as though they were greasy, and float on the surface of water. This is frequently a cause of loss, especially in the treatment of tin oxide (cassiterite), native copper, and native gold.

Decrepitation.—Certain minerals, such as calcite, barite, and fluorite, when heated fly to pieces, while others are not so affected. This treatment applied to a carefully sized product may permit a separation by subsequent screening.

There are two chief steps in concentration: (1) The breaking up of the rock, to sever the valuable minerals from the quartz or waste rock, and (2) the subsequent separation of these "values" from the worthless minerals.

Breaking.—The authorities divide breaking into three kinds: (*a*) Breaking by pressure as with the rock breakers, rolls, and the various roller mills; (*b*) breaking by a blow, as with the steam and gravity stamps; (*c*) breaking by abrasion as with the Heberle mill, Washoe pan, etc.

The breakers and rolls do not make large proportions of slimes. They act mainly on the larger fragments, and at the first fracture the broken pieces may fall away. The fines as a rule have a chance to drop out as fast as they are made, and do not remain in the mill to be ground finer. With stamps and grinders a high percentage of slimes is made, owing to the fact that the fines stay with the coarse particles a longer time and are liable to be reground or pulverized.

For coarse breaking the Blake, Dodge, and Gates types of crushers are commonly used. The Blake and Dodge patterns are simple in construction and easy of repair. The Dodge and Gates are capable of doing finer crushing, while the Gates and Blake are machines of greater capacity, particularly the larger sizes of the first. In all of them the ore is broken between approaching and receding jaw or crusher plates.

For finer breaking a great variety of machines is employed, among which may be mentioned steam stamps and gravity stamps, which break the ore by a blow: rolls, the Huntington roller mill, and the Bryan roller mill, which break the ore by rolling pressure; and the arrastra, Washoe pan, Heberle mill, and ball-mill, which grind the ore between two surfaces, one of which slides upon the other. All of these machines find appropriate places in one mill or another according to their fitness for the work to be done and the preference of the managers. For example, the gravity stamp is almost universally used for crushing gold and tin ores; the steam stamp is the only machine now in use for crushing the native copper of the Lake Superior region; rolls are almost universally employed for lead and zinc ores and copper ores elsewhere than at Lake Superior; and the Huntington and Bryan mills are much used for the finest crushing of many ores.

Separating.—The concentration proper, or the separation of the "values' from the refuse after breaking, is divided into two kinds of work: (1) The preliminary work, which separates the material into classes, which may or may not be enriched thereby; and (2) the final work, which separates the "values" from the refuse of each class, the former going to the smelter, the latter to the dump.

MACHINES.

The preliminary separators include the grizzly or bar-screens, the drum-screens (trommels), the hydraulic classifiers, and the "spitzkästen." The screens separate the materials which come to them into coarse and fine, and a series of screens with sizes ranging from very large spaces in the first down to very small spaces in the last, will give a series of products ranging from the largest down through all the sizes to the finest. Each of these sizes is kept separate from all the others and sent to its proper place in the treatment.

The hydraulic classifier subjects the sands which pass through the finest screen to an upward current of water in a confined space, and the particles which have sufficient weight to settle down through the current can go out through a discharge spigot below, while those which cannot do so go over to the next pocket of the classifier, where an upward stream of less force awaits them, and so on to a third and a fourth pocket. The overflow passes on to the "spitzkasten," which has three or more pointed boxes, each larger than the preceding. In this the particles settle out of the carrying current of water, which passes over the surface to the discharge end of the box, and no upward current is used. Since the speed of the current decreases in the successive boxes, coarser particles settle in the first, and finer particles in the later boxes. In some mills a settling tank, making only one grade of settlings, is used in place of the spitzkasten.

Looking in review over the products of the preliminary separators, it will be seen that the ore has been divided into a series of sizes, ranging from the coarsest, obtained from the first sieve, down to the finest size of the spitzkasten; the products from the classifier and the spitzkasten, however, are both what are called "water-sorted products," which differ from the "sized products" obtained from the screens, in that the quartz and galena in any one of the latter are of equal size, while in the former the quartz particles are much larger than the galena.

Final Separators.—Having considered the preliminary machines, we will next take up the final concentrators. These include picking tables, jigs, vanners, shaking tables, slime tables, blanket tables, and amalgamating plates. They all turn out finished concentrates for the smelter. The waste from the finer machines goes to the dump, but that from the coarser machines may require recrushing, in order to recover certain values that it may still retain.

On picking tables, rich minerals above 1 in. in size may be picked out by hand, and the rest passed to the breakers and the sizing machines.

The jigs receive the sizes next below those treated on picking tables, each of the sizes having its own jig, down to nearly the last of the classifier products. The jig treats the ore on a sieve by the action of an up-and-down movement of water. When screen-sized quartz and galena are subjected, on an immersed sieve, to an upward current of water which loosens up the ore, the galena, being the heavier, drops below the quartz and a separation is effected; and as the ore is fed continuously to the jig the quartz passes off by the overflow, while means are provided for drawing off from the sieve the accumulation of galena as fast as it collects. When a water-sorted product from the classifer is fed to the jig the downward movement which follows each lift is quite as important as the upward movement; for the downward current draws down the small particles of galena through the interstices between the large grains of quartz. The galena passes down through the sieve in this case and the quartz passes off at the overflow as before.

Vanners are used to make the final separation of the last products of the classifier, or the first of the spitzkasten, for both. The Frue vanner is an endless belt 4 ft. wide, with flanges or ribs on the edges to keep the pulp from running off the sides. The belt runs upon end rollers 12 ft. apart, with small supporting rollers between them. It has a gentle slope, moves slowly up hill, and is given rapid vibrations sidewise. When water and ore are distributed across this belt they are subjected to three actions: first, the vibrations settle the rich minerals upon the belt, with the quartz floating above it; secondly, the slow upward travel of the belt draws the former toward the upper end of the machine, where they are discharged; and, thirdly, the downward flow of the water carries the quartz with it, to be discharged at the lower end of the machine; and thus separation is effected. The fact that the quartz is larger and galena smaller in size is of less importance for vanners than for slime tables.

The slime tables, which treat the last two or three products of the spitzkasten, including the fine mud, are generally circular tables of about 17 ft. diameter, with a very slight inclination from the center toward the circumference. They revolve continuously and very slowly in one direction, so that if the fine ore and water from the spitzkasten are fed on one side at the center, and clean water on the other side, the water will, in both cases, flow down and over the margin of the table, carrying with it the grains that are most affected by the current. The large grains of quartz are more affected than the small grains of galena for two reasons: first, they project higher into the water film, where the water is moving faster; and secondly, the quartz is of less specific gravity, so that, if other things are equal, it will be moved more rapidly than galena. These conditions then serve admirably, first by the aid of the water which brings the ore, and secondly by the aid of the clean wash water on the other side of the table, to push the quartz off the margin of the table and to retain the galena until it reaches the wash-off jet, which forcibly removes it, and prepares the table to treat a new supply of ore.

Within a few years a number of gold mills in California and Colorado have introduced blanket tables with success, to catch the fine sulphurets that escape the vanners. These tables, which are about 10 ft. wide and 12 to 15 ft. long, slope 1 in. to the foot, more or less, and are covered with canvas. As the pulp flows over this surface the fine particles of pyrites, being heavier than the quartz, are more readily retained in the meshes of the canvas than the latter. When the meshes have become pretty well filled with pyrites, the flow of pulp is turned to another table, the remaining quartz is washed off by a stream of clear water, and finally the pyrites is hosed off with a strong flat jet, being guided into a separate sluice from the tailings sluice.

A number of shaking tables have been designed which sometimes take the place of vanners, or slime tables, or both. They all have a bump or a jerk imparted to them, which acts either at right angles to the flow of the water film or diametrically opposite to it, and in every case the heavy minerals are settled below the quartz by the jerk, and are thrown further in the direction of the jerk than is the quartz. The quartz, on the other hand, as it is floating in the upper layer, is more affected by the water current than the heavy minerals. By adjusting the slope and the water quantity these two opposing forces are made to deliver the valuable minerals at one point and the quartz at another.

Amalgamating plates are copper plates electroplated with silver or coated with a film of gold amalgam or silver amalgam. When ore which has been stamped, and therefore contains its gold in a more or less brightened condition, is run over these plates, the gold is instantly amalgamated and adheres to the plate. It is found that the gold is best caught at the point where the feeding stream impinges gently upon the surface of the plate. Plates, arranged in step form with frequent short drops (about 1¼ in.) from one to another, therefore seem best adapted to catch the maximum amount of gold.

PRINCIPLES OF ORE DRESSING.

A great deal of study by mill men and engineers has been put upon the question as to how the machines shall be arranged in a mill to turn the good qualities of each machine to the best account; and much difference of opinion still exists in regard to it. The more we study the principles of action of these machines the better are we qualified to discuss the matter intelligently and contribute suggestions of real value toward the solution of these questions.

The principles which govern the action of some of the machines have been stated in the description which has just been given. Some results of investigations into the laws which regulate those principles will now be mentioned.

In jigging, the first question which arises is: "Does suction help or hinder the jigging of screen-sized and of water-sorted products?" Tests were made to decide this question by varying the amount of suction used, and also by varying the size of the valuable mineral while the size of the quartz remained constant. The results are shown in the following table, and the ease or difficulty of jigging is shown by the number of pulsions needed to separate the percentage indicated:

Diameter of quartz, in inches	0.0683	0.0683	0.0683
Diameter of valuable mineral, in inches.	0.0683	0.0262	0.0195
With strong suction—			
Pulsions needed	*b*2,129	1,759	*a*297
Per cent. separated	96	95	95
With mild suction—			
Pulsions needed	*b*306	846	*a*1,382
Per cent. separated	99	100	98
With no suction—			
Pulsions needed	*b*147	496	Infinity.
Per cent. separated	98	50	None.

The figures marked (*b*) clearly show that screen-sized products should be jigged with as little suction as possible, for with much suction 2,129 pulsions were needed against 147 pulsions with no suction. On the other hand figures (*a*) show that to jig water-sorted products much suction greatly helps the process; for with much suction only 297 pulsions were needed to effect an almost perfect separation, while with no suction separation was impossible, the valuable mineral floating on top of the quartz.

This table shows further that when the valuable mineral in a water-sorted product is so heavy that the diameter of the quartz is as much as 3.52 ($\frac{0.0683}{0.0194}$) times that of the valuable mineral, suction acts with great ease and rapidity; but when the figure is much less than 3.52 it is difficult jigging, unless the jig has a very coarse sieve upon it.

The ultimate effect also of pulsion or upward current in a jig has been studied in a vertical tube, in which mixed sizes of grains of quartz and galena, from 0.1 in. diameter down to dust, were subjected to an upward current of water, which was tried both as a pulsating intermittent current and as a steady current, with identically the same results; it was found that after all the heaviest of the galena had settled beneath the quartz, and equilibrium of the particles in the quicksand had been attained, alongside the quartz small grains of galena were balanced in equilibrium, and when these were taken out and measured the diameter of the quartz was found to be about 5.8 times that of the galena.

This test was tried and figures obtained for a number of minerals of different specific gravities, among which are the following: The specific gravity of the quartz being 2.640, quartz is 8.6 times the diameter of copper (sp. gr. 8.479), 5.8 times that of galena (sp. gr. 7.586), 3.7 times that of arsenopyrite (sp. gr. 5.627), 2.8 times that of pyrrhotite (sp. gr. 4.508), 2.1 times that of blende (sp. gr. 4.046). These are called the "hindered settling" ratios.

Examples: When particles of quartz and galena are placed in a mass in a rising current of water and equilibrium has been reached, it will be found that the diameter of a quartz particle is about 5.8 times the diameter of the galena particles adjacent to it; when a mass of quartz and arsenopyrite has reached equilibrium in a rising current of water, it will be found that the diameter of a quartz particle is about 3.7 times the diameter of the arsenopyrite particles adjacent to it.

These data, taken in connection with those previously given, show that classifier products of quartz and pyrrhotite, and still more so of quartz and blende, will be difficult to work by suction unless a very coarse sieve is used on the jig.

The next question which occurs affects both the jigging and the slime-table work.

It is: "What is the ratio between the sizes of quartz and valuable mineral in the products of the hydraulic classifier and the spitzkästen?" Measurements have been made of the diameters of particles of galena and quartz when settling freely and with the same velocity. The following table will show the diameters of the quartz and galena particles which are equal-settling in the upward currents specified when treated under free-settling conditions, together with the observed and calculated diameter-ratios:

Particles Fall in Current of Inches Per Second.	Particles Rise in Current of Inches Per Second.	Diameter of Particles in Inches.		Ratio Between Diameters of Particles Actually Obtained.	Diameter of Particles in Millimeters.		Particles Fall in Current of Millimeters Per Second.	Particles Rise in Current of Millimeters Per Second.	Ratio Between Diameters of Particles Averaged by a Curve
		Quartz.	Galena.		Quartz.	Galena.			
0.000	0.050	a0.00119	a0.00076	1.55	a0.0301	a0.0194	0.00	1.26	1.54
0.050	0.099	0.00132	0.00078	1.69	0.0335	0.0198	1.26	2.51	1.68
0.099	0.199	0.00224	0.00115	1.95	0.0568	0.0292	2.51	5.05	1.82
0.394	0.577	0.00561	0.00242	2.32	0.1423	0.0613	10.01	14.66	2.23
0.780	1.186	0.00890	0.00410	2.18	0.2264	0.1032	19.80	30.12	2.48
1.186	1.589	0.01350	0.00510	2.63	0.3416	0.1305	30.12	40.37	2.61
1.589	1.972	0.01530	0.00550	2.76	0.3880	0.1404	40.37	50.08	2.72
2.366	2.769	0.02320	0.00790	2.95	0.5893	0.1997	60.09	70.34	2.92
3.552	3.919	0.04030	0.01350	2.99	1.0234	0.3428	90.21	99.54	3.21
5.526	5.918	0.06320	0.01800	3.52	1.6032	0.4560	140.37	150.31	3.54
7.106	7.826	0.07780	0.02280	3.42	1.9744	0.5776	180.51	198.78	3.70

(a) These figures have less value than the others, because the diameters in this case range from these figures down to zero.

Example: When quartz and galena have gone out of one classifier pocket where the upward current is 40.37 mm. per second, but have been discharged from the spigot of the next where the upward current is 30.12 mm. per second, the quartz particles will be about 0.3416 mm. in diameter and the galena about 0.1305 mm. or the quartz particle will be about 2.61 times the galena in diameter. A hydraulic classifier probably gives products with nearly these ratios. The grains may hinder one another to some extent, and if they do the ratios will be larger, but not so large as with hindered settling. These ratios, called the "free settling" factors, or multipliers for obtaining the diameters of quartz which will be equal-settling with the mineral specified when settling freely in ample water, have also been obtained for the following minerals among others:

	Velocity in Inches Per Second.							
	2	3	4	5	6	7	8	9
	Multipliers.							
Sphalerite	1.46	1.05	1.17	1.62	1.64	1.68	1.66	1.56
Pyrrhotite	1.73	1.29	1.48	2.00	2.22	2.26	2.13	2.08
Arsenopyrite	1.90	1.57	1.89	2.42	2.56	2.73	2.84	2.94
Galena	2.71	1.83	2.26	3.00	3.42	3.65	3.76	3.75
Copper	2.71	2.00	2.36	3.00	3.20	3.58	3.76	3.75

Example: If a compact particle of galena, falling freely in water, settles 7 in. per second, the particle of quartz of the same shape that will settle at the same rate will be approximately 3.65 times the diameter of the galena.

In regard to the spitzkasten the evidence thus far obtained indicates that while the above ratios are probably true for the coarser grains of each product the earlier products will always be contaminated with grains that belong in the later, a fault which causes loss of rich mineral upon the tables.

In regard to slime tables the mill man will ask: "At what angle of slope should a slime table be built, and with what quantity of water should it be fed?" To gain facts which will throw light upon these questions measurements have been made of the lowest angles at which all the grains of quartz, in any given free-settling product, will roll, the water quantity varying from 1 lb. up to 25 lb. per minute on each 2 ft. width of table. A similar set of angles have been measured for the galena and they are found to be much larger than those of the quartz, in fact at the angle where all the quartz rolls scarcely any of the galena moves. These measurements have all been repeated for a number of different free-settled products, giving a range from the finer to the coarser sizes. The following two tables give these facts for galena and quartz:

GALENA.—ANGLES AT WHICH ALL THE GRAINS MOVE.

Pounds of Water Per Minute on 2 Ft. of Width.	Millimeters Per Second of Current Which Lifts the Particles.						
	1.26	2.51	5.05	14.68	40.37	50.08	70.34
	Millimeters Per Second of Current in Which the Particles Fall.						
	0.00	1.26	2.51	10.01	30.12	40.37	60.09
	Galena Finish-Angles (Minimum of Three Trials in Most Cases).						
1	15°20′	.. ..	9°00′	12°45′	10°40′	....	....
2	12°20′	....	11°00′	9°30′	10°00′	....	....
4	7°50′	10°50′	6°15′	7°10′	5°30′	7°30′	9°00′
6	3°05′	6°00′	4°15′	5°15′	4°40′	5°55′	7°30′
8	....	4°30′	5°00′	4°45′	3°55′	4°55′	6°10′
10	0°50′	....	....	4°15′	4°00′	4°20′	5°05′
12	....	....	....	4°00′	3°50′	4°05′	4°15′
14	1°05′	....	....	4°15′	4°10′	4°20′	4°50′
16	....	....	....	4°20′	4°05′	4°10′	4°25′
18	0°50′	....	....	4°30′	4°40′	4°35′	4°15′
20	....	....	....	4°30′	4°55′	5°05′	4°15′
22	....	....	....	5°05′	5°05′	5°00′	4°50′
25	....	....	....	5°35′	7°20′	5°30′	4°55′

QUARTZ.—ANGLES AT WHICH ALL THE GRAINS MOVE.

Pounds of Water Per Minute on 2 Ft. of Width.	Millimeters Per Second of Current Which Lifts the Particles.						
	1.26	2.51	5.05	14.68	40.37	50.08	70.34
	Millimeters Per Second of Current in Which the Particles Fall.						
	0.00	1.26	2.51	10.01	30.12	40.37	60.09
	Quartz Finish-Angles (Maximum of Three Trials in Most Cases.						
1	4°00′	3°20′	1°55′	3°45′	11°05′	7°30′	3°40′
2	3°40′	2°35′	2°25′	3°25′	7°30′	5°20′	5°25′
4	2°40′	2°30′	2°20′	3°00′	3°50′	3°10′	3°15′
6	1°05′	2°35′	2°00′	2°40′	3°10′	3°10′	2°45′
8	....	2°15′	2°10′	2°40′	2°50′	2°50′	2°35′
10	0°50′	2°15′	2°00′	2°25′	2°50′	2°45′	2°55′
12	....	1°35′	2°20′	2°05′	3°05′	3°00′	2°40′
14	1°05′	2°05′	2°00′	2°40′	3°30′	2°55′	3°15′
16	....	1°40′	1°35′	2°00′	3°30′	2°55′	3°10′
18	0°50′	1°20′	1°40′	1°40′	3°15′	2°45′	3°25′
20	....	2°15′	1°45′	2°30′	3°10′	2°25′	2°45′
22	....	1°30′	1°20′	1°40′	2°05′	2°45′	4°00′
25	....	1°30′	1°55′	1°50′	2°10′	2°20′	2°40′

Mill practice in this country generally puts about 10 lb. of water to each 2 ft. of periphery upon the slime tables. Assuming this quantity to be settled, we examine the table and find that 3° of slope will cause all the quartz to roll off while practically all of the galena remains. These adjustmeets will work satisfactorily for all sizes except the very finest slimes, and from these the whole of the galena may be lost. To catch this galena we turn again to the tables and see very favorable figures, if perhaps 7° slope and only 2 lb. of water on 2 ft. of width were used; for under these conditions the quartz will all roll at 3° 40′, while the galena does not all roll until 12° 20′ is reached.

DESIGN OF MILLS.

We now come to the grouping of machines to make complete mills for the systematic treatment of ores.

Tender minerals which are likely to lose considerably in the fine slimes are treated with systematic graded crushing, sizing, and washing. This is illustrated in the lead concentrating mills of Missouri, Colorado, and Idaho, and the copper mills of Montana, which may have all the following parts: (1) A receiving bin; ore goes to 2; (2) a grizzly; yields oversize to 3, undersize to 4; (3) a rock breaker; ore to 4; (4) a picking shoot; rich ore to 19, rest to 5; (5) a trommel with 16 mm. hole; yields oversize to 12, undersize to 6; (6) a trommel with 11.3 mm. hole; yields oversize to 13, undersize to 7; (7) a trommel with 8 mm. hole; yields oversize to 13, undersize to 8; (8) a trommel with 5.6 mm. hole; yields oversize to 13, undersize to 9; (9) a trommel with 4 mm. hole; yields oversize to 13, undersize to 10; (10) classifier, yielding first spigot to 14, second spigot to 14, third spigot to 14, fourth spigot to 14, overflow to 11; (11) spitzkasten, yielding first spigot to 18, second spigot to 18, third spigot to 18, overflow to settling tank, concentrates shoveled out periodically; (12) No. 1 rolls; ore goes to 5; (13) four Harz jigs, yielding discharges to 19, hutches to 10, tailings first jig to 15, second, third and fourth jigs to 16; (14) four Harz jigs, yielding earlier discharges to 19, last discharges to 17, hutches to 19, tailings to 20; (15) No. 2 rolls; ore to 5 in the regular set, or to a duplicate set especially designed for middlings; (16) No. 3 rolls; ore to 5 in the regular set or to the duplicate set for middlings machines; (17) No. 4 rolls; ore to 10; (18) perhaps two slime tables, vanners or shaking tables, yielding headings to 19, middlings to 18, tailings to 20; (19) concentrates bin to smelter; (20) tailings launder to waste.

Native copper in leaves, flakes, and arborescent forms should be broken so finely that the length of the individual particle does not greatly exceed the thickness, in order that copper may have its true settling power when balanced against rock. The steam stamp with moderately fine crushing ($\frac{3}{16}$ in. diameter) produces this results.

The Lake Superior copper mills employ a method of which the following may be taken as a type. The rock comes up in a skip and is dumped on 1. (1) Grizzly; yields mass copper to 13, oversize to 2, undersize to 3; (2) rock breaker; rock to 3; (3) rock-house bin; rock by cars to mill bins and picking shoot 4; (4) picking shoot; yields mass copper to 12, rest to 5; (5) steam stamps; yield crushed rock to 7, cover work to 6; (6) trough washer; yields copper to 13, rock to 5; (7) classifiers; yield first spigot to 8, second spigot to 8, third spigot to 8, fourth spigot to 8, overflow to 10; (8) four Collom jigs, yielding first skimmings to 13, second skimmings to 5, hutches to 9, tailings to 14; (9) two Collom jigs, yielding skimmings to 13, hutches to 13, tailings to 14; (10) settling tank, yielding spigots to 11, overflow to 14; (11) slime tables, yielding heads to 12, middlings to 11, tailings to 14; (12) kieve, yielding bottoms to 13, tops to 11 or 14; (13) smelting works; (14) waste launder.

The uncertainty of the zinc deposits of Missouri, taken together with the close competition in the ore market, have led to the adoption of a simple, high capacity mill, no attempt being made to save the fine slimes. Two such mills are outlined here.

The larger mills may be represented by the following: Ore hoisted to 1; (1) receiving floor; ore to 2; (2) Blake breaker, breaking to ¾-in.; ore to 3; (3) trommel, ½-in. holes; yields oversize to 4, undersize to 5; (4) rolls; ore by elevator to 3; (5) Harz jig with five sieves, with ⅛-in. spaces between bars, yields: First discharge lead to 8, first hutch to 7; second discharge zinc to 9, second hutch to 7; third discharge middlings to 6, third hutch to 7; fourth discharge middlings to 6, fourth hutch to 7; fifth discharge middlings to 6, fifth hutch to 7, tailings to 10; (6) rolls; ore by elevator to 3; (7) Harz jig, with six sieves, yields: First discharge lead to 8, first hutch lead to 8; second discharge zinc to 9, second hutch zinc to 9; third discharge zinc to 9, third hutch zinc to 9; fourth discharge zinc to 9, fourth hutch zinc to 9; fifth discharge middlings to 6, fifth hutch zinc to 9; sixth discharge middlings to 6, sixth hutch zinc to 9, tailings to 10; (8) lead ore (galena) bin; (9) zinc ore (blende) bin; (10) the dump.

The smaller Missouri zinc concentrating plants are represented by this typical mill: (1) Receiving floor; ore to 2; (2) Blake breaker; ore to 3; (3) rolls, crushing to ¾-in.; ore to 4, without screening; (4) hand jig with ⅝ in. spaces between bars; yields upper layer to 9, middle layer to 4, lower layer to 5, hutch to 5; (5 *) hand jig (finishing jig), with ⅜-in. spaces between bars, yields upper layer to 9, middle layer to 5, lower layer to 6, hutch to 6; (6*) hand jig (lead jig), with ⅜-in. spaces between bars; yields upper layer to 8, middle layer to 6, lower layer to 7, hutch to 7; (7) lead concentrates (galena); (8) zinc concentrates (blende); (9) waste dump.

For a gold ore in which the larger part of the gold is free to amalgamate, stamping and amalgamation to save the gold, followed by concentration to save the auriferous pyrites, has been adopted. Such a mill, as adopted in California, may include all the following parts:

The ore is dumped upon a grizzly 1. (1) Grizzly, 1½-in. spaces; oversize to 2, undersize to 3; (2) rock breaker; ore to 3; (3) bins; ore by cars to mill bins, and thence by shoots to 4; (4) feeders; ore goes automatically to 5; (5) California gravity stamps, with screen holes 0.03 in. in diameter, more or less; it yields, during run and at clean-up, battery amalgam to 9, inside plate amalgam to 9, iron scrap (rusted) to 4, uncrushed ore to 4, wood burned and ash sent to 11, run of pulp to 6; (6) apron plates; yield amalgam to 9, and pulp to 7; (7) mercury traps; yield amalgam to 9, and pulp to 8; (8) vanners; yield heads to 11, and tailings to 12; (9) cleaned in hand mortar or clean-up pan, yielding clean amalgam to 10 and dirt to 11; (10) retort and melting furnace; yield gold brick to mint, and mercury returned to the mill; (11) concentrates; shipped to chlorination works or smelter; (12) tailings; to waste or sent to blanket plant 13. The Gates blanket plant is here outlined: (13) hydraulic classifier, yielding spigot to 18, overflow to 14; (14) blanket tables; yield concentrates to 15, tailings to 18; (15) small, steep, end-shake vanner; yields heads to 17, tailings to 16; (16) special blanket tables, yielding concen-

---

*The same machine serves for these two operations.

trates to 15, tailings to 18; (17) concentrates to chlorination plant; (18) tailings to waste.

In cases where the larger portion of the gold is not easily amalgamated, and the auriferous pyrite is in coarse, large crystals, graded crushing, sizing, and jigging may advantageously precede the fine stamping, amalgamation and concentration of the fine auriferous pyrite. This is illustrated by a Colorado gold mill, which is outlined under the heading "gold milling," in the review of current literature, on a subsequent page.

Certain ores of silver, which yield their value to pan amalgamation only with difficulty, are found to give the greatest yield if pan amalgamation takes place upon the tailings of fine stamping and vanner concentration. If free gold is present it may be caught by plates following the stamping. This method is practiced in the combination mills of Montana and Utah, which may have all the following parts:

Mine ore to 1. (1) Grizzly, yielding oversize to 2, undersize to 3; (2) rock breaker; ore to 3; (3) mill bins; ore to 4; (4) feeders; ore to 5; (5) California stamps, with screen openings 0.02 in. square, yielding battery amalgam to 14, battery plate amalgam to 14, run of pulp to 6; (6) apron amalgamating plates, yielding amalgam to 14 and pulp to 7; (7) mercury trap, yielding amalgam to 14 and pulp to 8; (8) Frue vanners, yielding heads to 16 and tailings to 9; (9) Frue vanners, yielding heads to 16 and tailings to 10; (10) settling tanks, yielding pulp to 11 and overflow pumped back to batteries or run to waste; (11) combination amalgamating pans, the charge flushed to 12; (12) settlers, yielding amalgam to 15 and pulp to 13; (13) agitators, yielding amalgam to 15 and waste pulp to 17; (14) gold amalgam retorted and melted to a brick; mercury goes back to mill; (15) silver amalgam retorted and melted to a brick; mercury goes back to mill; (16) concentrates to smelter; (17) tailings to blanket plant or cyanide plant.

Certain ores in which the valuable mineral is finely disseminated, for example tin ore, non-free-milling gold or silver ore, chromite, etc., require fine crushing in order to liberate the values, which are then concentrated on vanners, bumping tables, or slime tables. This practice is exemplified in the fine concentration mills of Colorado and Utah, which may have the following arrangement: (1) Grizzly, making oversize to 2, undersize to 3; (2) rock breaker, sending ore to 3; (3) mill bins; ore to 4; (4) feeders; ore to 5; (5) California stamps with screen holes 0.027 to 0.043 in., yielding pulp to 6; (6) Frue vanners, yielding headings to 7 and tailings to 8; (7) smelting ore; (8) waste. The Wilfley table is being adopted for this class of work. Ores which contain rich minerals that are attracted by the magnet may be treated in such a mill as is outlined below, which is the design of a Ball-Norton plant now used at Svartö, Sweden: (1) Grizzly; oversize to 2, undersize to dryer and thence to 3; (2) breaker; ore goes to dryer, thence to 3; (3) rolls; ore goes to 4; (4) screen with 1 mm. holes; oversize to 3, undersize to 5; (5) Ball-Norton concentrator, yielding headings to 6, middlings, small in quantity, stored for future treatment, tailings to 7; (6) smelting works; (7) the apatite is concentrated by spitzkasten, fine jigs, round tables, and bumping tables.

The Wetherill and Edison magnetic plants are outlined in the review of current literature on a subsequent page.

Nodular ores in superficial deposits, such as limonites and apatites, require that the fine clay and sand be disintegrated and washed away. An example of this is found in the hard-rock phosphate mills of Florida and South Carolina. Such a mill may have the following parts: (1) Grizzly, sending oversize to 2, undersize to 3; (2) rock breaker, delivering to 3; (3) log washer, yielding cleaned lump to 4, fines and clay waste to 6; (4) double screens with holes $\frac{1}{8}$ in. and $\frac{1}{16}$ in., making oversize on $\frac{1}{8}$ in. to 5, oversize on $\frac{1}{16}$ in. to 5, undersize less than $\frac{1}{16}$ in. to 7; (5) picking belt, yielding phosphate to 6, and waste to 7; (6) calcined by heap roasting; (7) waste. Land pebble phosphate washing omits the grizzly and breaker. River pebble omits also the log washer.

A fine fibrous mineral like asbestos may be separated from granular minerals by floating it in an air current. A mill designed for this work is outlined later, in the review of current literature.

Special plants are adapted, from time to time, to suit some special problem which mills previously designed do not suit. Three such mills are described later in this paper, viz., those of Wetherill, and Edison, and the asbestos mill.

TESTING FOR A MILL PROCESS.

While it is always in order to send a batch of ore to a custom mill, and obtain therefrom returns which indicate what may be obtained from the ore in question by treating it by the method used in that mill, it may happen that there is no custom mill, or that the ore in question needs other treatment. Under such circumstances, to obtain as much information as possible, pointing to the method of treatment that will be most successful, a number of tests have shaped themselves to which the ore may be subjected.

1. The minerals should be determined and representative specimens of the different minerals or mineral aggregations analyzed or assayed to ascertain the values in the different metals, and notes should be made as to whether the valuable minerals occur coarsely crystalline or finely disseminated. All of these observations will bear upon the tests that will be chosen, and upon the mill process that will finally be selected.

2. A batch of ore may be crushed to the size which judgment may indicate to be proper for the washing to begin, namely, fine enough to liberate a good proportion of the rich minerals, and yet not make a serious amount of slimes. This is then sized in a series of sieves, and the different products weighed and assayed for the different metals. With the facts so obtained a crushing curve may be drawn, in which the abscissæ represent sizes, and the ordinates the percentage of total metal. This curve may be drawn for each metal, and it will show where the "values" are located.

3. Each of the sized products just mentioned, or a representive sample of each, may be hand-picked into three products: (*a*) Pieces which are at least half composed of rich mineral; (*b*) those which are a half to a tenth rich in mineral; (*c*) those which have a tenth, or less, rich mineral. These three products, for each size, may be called heads, middlings, and tailings; and they give a fairly good idea of the yield that the different sizes will give if subjected to concentration. A hand-pan or a vanning-shovel will have to be used for the undersize of the finest sieve. The products so obtained may be weighed and assayed, and

the results will give an approximate estimate of the reduction in weight by concentration, the value of the concentrates, and the amount of value lost in the tailings.

4. A miniature mill test may be made by using a nest of sieves and a 3×4 in. jig, with a vanning-shovel for the fines. Vezin recommends this, and uses with it about 50 lb. of ore. A similar test on a little larger scale, which has been found very satisfactory by the author, is to use a set of flat shaking sieves 3×1 ft.; a three-sieve Harz jig with sieves about 9×9 in.; a small spitzlutte, in which the fines will yield two or more spigot products and an overflow; and, finally, a canvas table 2 ft. wide and 6 ft. long, with adjustable slope. The oversizes of the different sieves are jigged separately, yielding heads, middlings, and tailings. The spitzlutte products are treated, No. 1 on the jig; Nos. 2, 3, etc., separately, on the canvas table, with about 1⅞ to 2⅛ in. slope per foot—the lesser slope for pyrite, the greater for galena, using 16 lb. of water, or less, for 2 ft. of width. They all yield headings and tailings. By weighing and assaying all these products a very good idea may be obtained of what the large scale work will yield. The right quantity for this test is about 500 to 600 lb.

5. Where the mineral is finely disseminated a sample may be broken in a mortar and sifted through a 10 to 50-mesh sieve, according to size of crystals, and then washed in a pan, batea, or vanning shovel, the products being weighed, assayed, etc.

6. A weighed amount of ore may be broken (wet) in a mortar, to pass through a 30 to 50-mesh screen, and treated in a gold pan with mercury. The gold which is free and has been brightened by the breaking will be collected by the mercury. The mercury is then separated, retorted, and the residue cupelled with silver, parted, and valued. The tailings from the amalgamation are concentrated by panning, and both the concentrates and tailings weighed and assayed. This test will give approximate results for gold milling ores.

7. A magnetic iron ore may be broken in a mortar and sifted through a series of sieves, from 4 to 50-mesh, according to quality of ore, and subjected to the action of a hand electro-magnet, using a weak current at first, to get the richest product, increasing the current to pick out middlings, and leave the final tailings as poor as possible. The middlings may then be reground to pass through a finer sieve, and again subjected to magnetic treatment. By weighing the products and analyzing them for iron, phosphorus, etc., an estimate may be made of the yield on a large scale.

CURRENT LITERATURE.

Below is given a review of the ore-dressing literature of the year 1897:

ROCK BREAKERS.

Two new rock breakers[*] of the Blake type have appeared, in each of which the movable jaw is driven by an elliptical cam, revolving on its center of figure and acting upon the surface of an antifriction roller. In the "Dragon" the roller is upon the back of the movable jaw. In the "Champion" it is at the

---

[*] *Engineering*, LXIII., 1897, p. 371.

lower end of a vertical lever, at the middle of which is a toggle operating the movable jaw.

*The Allis steam stamp** at the Tamarack mill of Lake Superior has crushed through a screen with $\frac{3}{16}$-in. round holes at the rate of 320 tons per day for six days.

FINE CRUSHERS.

The Roger rolls† differ from the ordinary crushing rolls in that the plane of the horizontal axes slopes at an angle of 45°; the boxes of the lower roll are fixed; those of the upper slide in vertical guides. The weight of the upper roll takes the place of the spring in the ordinary rolls. They are claimed to occupy less space, do away with springs except when crushing to fine sizes, and consume 25% less power.

In casting chilled iron roll shells some irons chill easily, while others do not, and it is difficult to mix the two; on this account shells are made of the former, with or without a small admixture of the latter. The Lewis Foundry and Machine Co. of Pittsburg finds that when shells are cast on their sides they are apt to vary in thickness. This difficulty is overcome by casting the shells on the end.

The Sutherland pulverizer consists of two horizontal disks revolving in opposite directions, and with surfaces to suit the work. Between them are six conical corrugated rollers with their small ends toward the center. The ore fed with water from above, at the center, is crushed under the rollers by their weight, together with that of the upper disk, and then passes out at the circumference. It has been used at El Callao mines, Venezuela, with satisfactory results as to capacity and wear.

Rademaker's cement gravel mill‡ is a trommel 8 ft. long and 26½ in. inside diameter, with its walls made of longitudinal bars having ¼-in. spaces between them. Heavy hammers, 32 in all, hinged to the bars in two spiral rows, drop in succession as the trommel revolves, crushing the gravel. It requires about 5 h. p. and crushes over 50 tons in 24 hours.

D. B. Morison's high speed stamp§ applies the power through a crank, a connecting rod, and a cylinder, running in guides to a piston, the rod of which is the stamp stem with its shoe attached. The space in the cylinder beneath the piston is quite filled, and an annular space around the cylinder is partly filled with water. These two water spaces are connected by a small orifice, a few inches above the bottom of the cylinder; the motion of the piston, relative to that of the cylinder, is regulated by the speed with which the water can pass through this orifice. At the upper end the cylinder is connected by orifices with the annular space, and air passes only through these openings. Five stamps are used in a battery, and the five cranks divide the circle equally. In California the opinion has been expressed that the principle deserves a trial, but that it is a departure from simplicity and it will probably increase the formation of slimes.

---

* Manufactured by Edward P. Allis Co., Milwaukee, Wis.

† Manufactured by the Stearns-Roger Mfg. Co., Denver, Colo.

‡ *Eng. and Min. Journal*, May 1, 1897, p. 429.

§ *North East Coast Institution of Engineers and Ship Builders*, April 30, 1897.

Masonry Mortar Blocks.—There is a tendency to substitute masonry for timber in the construction of mortar blocks. The new 40-stamp mill of the Banner mines, near Oroville, Cal., is an instance. The mortar block is of pyramidal form, 8 ft. wide at the base and 4 ft. high. The lower 3 ft. is built of rubble masonry in courses, composed of one part cement, two parts sand, and five parts rock. Above this the whole block is made of one part cement and two parts fine river sand. The bolts for holding down the mortars are imbedded 33 in. in the concrete.

Richard A. Parker of California describes a *false stamp shoe*, used in South Africa with satisfactory results by the Consolidated Gold-Fields Co. It is attached to the boss and to the half-worn shoe, in the usual way of connecting a boss and shoe. It serves to restore the weight and length when the shoe is half worn out.

Materials for Stamp Mills.—H. W. De Courteney presents his conclusions in regard to the proper material for the different parts of a stamp mill. Since smooth wearing surfaces are all important, the cost of the material for shoes and dies should be secondary to the quality. Special forged steel furnishes the best material for both, but to get the combination of the hard shoe and tough die, the quality of metal must differ in the two. Cams and tappets should be of hard, tough steel castings, with carefully machined bearing surfaces. For bosses, castings of tough steel, to resist splitting, are preferred. He commends crucible steel for stamp stems, in the place of wrought iron or cold-rolled steel. The shafts should be of cold rolled steel or of turned wrought iron. The mortars should be of tough cast iron.

Ball Mill.—Almarin B. Paul has designed a ball mill in which the die or inner screen is a true cylinder with wider spaces at the ends of the sections for returning the oversizes of the outer screen. He feeds the mill by an axial tube with slots in it.

The chamber ball mill[*] (Kammer-Kugelmühle), runs on a horizontal axis and has three circular diaphragms at right angles to the axis, dividing the grinding space into four chambers. The first and third allow the pulp to pass through small holes near their circumference; the second allows it to pass through small holes near its center. The inlet and outlet are at the center. It is said to give a more thorough subjection of the ore to the grinding action.

L. Sell[†] has written an article on the ball mill, treating the subject historically, and bringing it down to modern practice. The article is too long and comprehensive to admit of abstracting.

Centrifugal Grinder.[‡]—The Poettgen grinding mill is a pan-shaped mill with a vertical shaft in the center, carrying a revolving boss to which six hammers are hinged. The circumference of the pan acts as a die, and is cast with seven re-entering angles; the action of a hammer as it leaves one of these is to strike a hard blow upon the next. It then drags or grinds upon its surface until ready to strike the next blow. As there are six hammers, and seven angles, the blows of the whole machine come in succession. The discharge sieve is

---

[*] *Thon Industrie Zeitung*, Oct. 22, 1897, p. 1052.

[†] *Dingler's Polytechnisches Journal*, Vol. CCCVI., pp. 38, 59, 83.

[‡] *Thon Industrie Zeitung*, Oct. 28, 1897, p. 1070.

above the die, on one side. Stirring paddles above help the discharge of the pulp.

SHAKING TABLES AND VANNERS.

The Wilfley table, manufactured by the Mine and Smelter Supply Co., Denver, Colo., is 16 ft. long and 7 ft. wide, resting upon rollers, admitting of endwise motion. A jerking motion is provided which tosses the ore particles forward toward the head of the table. The stroke is ⅞ in. for coarse products and ½ in. for fine. The speed is 225 strokes per minute for coarse, and 250 for fine. The table is fed at one corner. It is ½ in. higher at the head end than at the feed end, and it slopes downward from the feed side toward the side where the tailings discharge. Upon it are placed cleats running lengthwise, which are ¼ in. high at the feed end and taper down to nothing. The cleat on the lower side runs the whole length of the table, that on the upper is considerably shorter. The others are graded in length from the upper toward the lower. The pulp and water are distributed by a feed trough running the whole length of the table which has two partitions in it. The first space of about 2½ ft. is devoted wholly to pulp, which it discharges through holes about ¼ in. in diameter. The first partition is hinged above and can be swung at will to allow such portions of the pulp as is desired to go into the second compartment, which is about 5½ ft. long. The second partition is fixed and has in it a feed pipe for clear water to supply the second and the third compartments as desired. The third compartment is about 8 ft. long. All three compartments distribute their respective waters through small holes along the upper edge of the table. The action of the table is as follows: The vanning motion settles the heavier grains below the light ones and tosses them toward the head of the table. The heavy grains are prevented from rolling down the slope by the cleats. The light grains, on the other hand, rise, and are carried over the cleats by the cross current of water. There results an expanding band of heads, another of middlings, and another of tails, and the position of delivery of these three products is regulated by the amount of slope and of wash water. In order to do the best work the table should be fed with products previously sorted by a hydraulic classifier. It can treat sand up to 8-mesh in size with a capacity of 15 to 25 tons per 24 hours, and an expenditure of 1 h. p. It is meeting with great favor in Colorado and has recently displaced all other slime apparatus in several mills.

*The Hendy-Norbom vanner** uses bent springs in place of toggles. They are claimed to prevent the formation of banks at the sides as a result of a peculiar tilting motion.

A Bilharz table has been employed at the mill of the Dolcoath tin mines, Cornwall. The results show clean work but small output. Two Frue vanners have just been put into this mill. The results are not yet reported.

Classifying Pulp for Vanners.—Ph. Rearden thinks that in the concentration of gold and silver ores there is a great deal of loss due to too fine stamping and lack of sizing. He cites an instance where a mill crushing to 40-mesh lost $2 to $4 per ton in the tailings, which when changed to 16-mesh

---

* Manufactured by Joshua Hendy Machine Works, San Francisco, Cal.

and furnished with two hydraulic classifiers never lost more than $1.25, and frequently as little as 25c. per ton. The same ore was used in each case.

W. Bettel and J. H. Johns conclude that classification, preparatory to vanners, is not advantageous. They are of the opinion that turbid water is more favorable than clear water for settling the finer particles of the heavier minerals.

E. B. Kirby advocates graded crushing and washing, and the use of hydraulic classifiers previous to vanners, bumping tables, and slime tables. He thinks technical results are too much sacrificed, in this country, for the purpose of getting the quickest returns on capital.

AUXILIARY MACHINES.

A sampler for mill tailings, used at the Idlewild mill, California, is a horizontal reaction water wheel, discharging the whole mill tailings through 10 jets. One of the pipes 38½ in. long extends beyond the others and directs its stream vertically downward; this passes over a bucket with a convex conical cover, projecting up from the center of which is a flat tube 4 in. long by $\frac{1}{16}$ in. wide. Transversely over this tube, or slot, the vertical stream passes once every revolution. By this device $\frac{1}{19,366}$ part of the 120 tons per 24 hours (about 12½ lb.) goes into the bucket.

F. H. Mason deprecates the too prevalent haphazard way of taking samples upon which important computations are based.

A traveling belt picking table and screen, substituting bars for wire cloth, is used at the Von der Heydt colliery, near Saarbruck. The bars are 450 mm. long, with spaces 35 mm. wide between them. The method of putting in the transverse stay rods with space thimbles is given in detail.

A simple conveyor used at Grantham, England, is a wooden trough sloping 1 in 10, oscillating on suspended rollers, with a throw of 4 in., and 120 throws per minute.

Dryers.—The use of a chimney for drying fine ore is described in THE MINERAL INDUSTRY, Vol. V., p. 20.

TESTING APPARATUS.

Henry A. Vezin describes a *hand testing jig*,* with sieve 3 by 4 in. and bed of sand 1½ in. deep, with plunger movement adjustable from 0 to 1½ in. The crank is geared 3 : 1 so that any speed up to 240 pulsions per minute may be obtained. The jig is provided for continuous feed and discharge of tailings, so that an accumulation of concentrates may take place upon the sieve. Mr. Vezin treats a batch of 50 lb., sizing it upon a series of sieves ranging from ¼ in. in diameter down to 40-mesh. He jigs these various products and washes that which passes through the 40-mesh sieve upon a vanning shovel, and by weighing up and assaying all the heads, middlings, and tailings, he predicts the behavior of the ore in the mill.

A hand jig for testing ores, with sieve 7½ × 13 in. and 16 in. deep, has been designed by S. I. Hallett of Aspen, Colo. It is a one-sieve Harz jig, with hand crank directly upon the eccentric shaft, and with eccentric adjustable from 0 to 1⅛ in. It may be run at 100 pulsions per minute for coarse sand,

---

* Colorado Scientific Society, June 5, 1897.

and up to 150 for fine. The sieve box is removable. It is not provided for continuous feed and discharge of tailings, but might easily be made so.

A testing jig has been described by Robert H. Richards.* It is a movable sieve jig, consisting of a tube of glass or metal cut apart at 4 in. from the top, with a sieve placed between the two parts. The two parts of the tube and the sieve are held together by clamps. The sieve receives its pulsations from an oscillating beam driven by a hand crank, connected by multiplying gear or pulleys. The amount of pulsion can be regulated by connecting the sieve tube nearer to, or further from, the center of the beam. The amount of suction may be regulated by the height of the water in the outer jar. Thus closely sized grains may be rapidly jigged with almost no suction, by using high water, while products from a hydraulic classifier, which require much suction on the jig, may receive it by using low water.

P. W. Duffield has designed a small *experimental hand jig* with circular sieve 2½ in. in diameter, which is 3½ in. below the top, and a plunger 2½ in. in diameter; the throw can be varied from 0 to 1¼ in.† It is so constructed that the result of jigging can be seen through the walls of a glass cylinder.

Paul Büttgenbach describes an *experimental jig*‡ of circular form 60 mm. in diameter, with glass sides, using about 100 g. for a charge. The pulsion is given by air pressure applied to the water in the outer vessel from a rubber bulb.

INVESTIGATIONS.

The currents in a spitzkasten have been studied by Robert H. Richards and C. E. Locke,§ by using a tank with a glass side, colored liquids, and photography. They find that the products of the earlier spigots are invariably contaminated with fine material belonging in the later. For partially overcoming this, two suggestions are made: (*a*) to furnish hydraulic water in a quantity to nearly supply the demands of the earlier spigots; (*b*) to confine the horizontal current above the surface of a horizontal perforated board which is level with the overflow. The most symmetrical current was obtained with a flat feed sole, sloping 5°, or 1 in. in 12 in. and entering at exactly the level of the overflow.

The persistency of local currents, shown by this paper, demonstrates the importance of breaking up the currents fed to settling tanks, since to get the best results we must have a current equally retarded at all parts of the tank.

Robert H. Richards has studied *the washing of sands and slimes upon a surface table*, varying the conditions of slope and quantity of water.‖ He finds that the tables in general use in mills are working upon the principle that the sulphurets must move down the slope more slowly than the quartz. The investigation suggests that it may be better to allow the sulphurets to rest upon the surface while the quartz moves away. These two results may be accomplished by decreasing the slope to stop the sulphurets, lessening the speed of revolution to give the quartz time to get off and diminishing somewhat the diameter

---

* *Trans. Am. Inst. Min. Eng.*, Vol. XXIV., 1894, p. 463.

† *Trans. Institution of Mining and Metallurgy*, Vol. V., 1896-97, p. 325.

‡ *Eng. and Min. Journal*, Sept. 11, 1897, p. 305.

§ *Trans. Am. Inst. Min. Eng.*, February, 1897.

‖ *Trans. Am. Inst. Min. Eng.*, February, 1897.

of the table. With these provisions it seems probable that the capacity can be maintained. The following table contains a few figures of the behavior of particles that rise in a current of 15 and fall in a current of 10 mm. per second:

Pounds of water per minute on 2 ft. of width.....	4	5	10	12	20	25
Angle at which all galena rolls....................	7° 10′	5° 50′	4° 15′	4° 00′	4° 30′	5° 35′
Angle at which all quartz rolls....................	3° 00′	2° 35′	2° 25′	2° 05′	2° 30′	1° 50′

The quartz particles in the table average about .1423 mm. in diameter, while the galena average .0613 mm. The table shows that if 10 lb. of water are moving over 2 ft. of width per minute the quartz will all roll when the angle is 2° 25′, while the galena will not all move until the angle reaches 4° 15′. The table further shows that there is a greater difference between the angles of quartz and galena at 5 lb. and 25 lb. of water than at 10 lb., which is common mill practice, showing on this account that those quantities of water would be more advantageous than the intermediate quantity. The larger one, however, is ruled out as a too extravagant use of water. The investigation further shows that more perfect classification is desirable, which can be obtained by hydraulic water, which nearly supplies the earlier spigots of the spitzkasten; and, moreover, the desirability of lessening the quantity of water, which can be done by using finer trommels, doing away with the heaviest work of the hydraulic classifier, where the greatest dilution takes place.

An investigation of the formation of waves upon the surface of the table shows that while the quartz moves at a lower angle than that at which the waves begin to form, galena moves at that angle, and these waves appear to account for the fact that the angles are more advantageous at 5 and 25 lb. of water than at 10 lb. The further suggestion is made that if means to do away with the waves can be devised, the treatment at 10 lb. may be brought up to be equally advantageous with 5 and 25 lb. of water. There is good reason for believing that this is the very thing that is done by the California canvas table, which is made of No. 6 duck.

Paul Etienne Maurice has mathematically calculated the trajectory of particles in a jig.* The formulæ involve the viscosity of the liquid, the density of the liquid and of the particles, the diameters of the particles, and the total force acting at the point occupied by the particle in the liquid. It is a purely mathematical discussion based on certain previously known laws.

GOLD MILLING.

Refer also to the article by A. L. Collins under the caption "Gold and Silver" in this volume.

The discussion as to whether *slow or fast stamps* are best for Gilpin County, Colo., ores, has received several contributions, all of them in the direction of increased speed. The Penn mill has 10 new stamps weighing 550 lb., making 62 drops and having 9-in. drop and 11-in. discharge. The mortars are 9 in. wide at the die and 10 at the bottom of the screen. These 10 stamps crush as

---

* *Comp. Rend.*, October, 1896, p. 113; *Col. Guard.*, Vol. LXXIII., 1897, p. 826.

much through a 50-mesh screen as the company's 25 slow stamps. The latter will be given up as soon as they wear out. Under the same management the Iron City mill has recently been built with 650-lb. stamps dropping 62 times per minute. The Vendome mill has 30 fast-drop stamps which are running full, while its 25 slow stamps are idle.

The method of handling Gilpin County ores by *coarse crushing and concentration,* followed by California stamps, at the Golden Concentrating Works of Golden, Colo., is described by John Gross. The ore goes to breaker, then to rolls, followed by trommels with 4, 6, 8, and 10 meshes, respectively, and by spitzkasten with two spigots. The oversize of the 4-mesh screen is returned to the rolls. The final overflow goes to two Wilfley tables, the coarser products to fine jigs. The tailings of the jigs are stamped by 10 California stamps, and go first to amalgamated plates, and thence to spitzkasten, two jigs and the Wilfley tables. The tailings of these last jigs also go to the Wilfley tables. The mill treats 60 tons per day.

J. W. Abbott calls attention of mill men to the importance of maintaining constant the height of drop and discharge of stamps. After the best conditions have been determined any serious variations will be harmful.

Planning and Running a Stamp Mill.—John E. Hardman of Montreal gives the results of his experience in the selection of materials for the parts of a stamp mill, and the practical overcoming of difficulties in running a mill. He begins by noting the necessity of careful and sufficient experiment before deciding upon the method of treatment. The rock breaker should be at the shaft-house, instead of at the mill, to relieve the mill engine of an unsteady load. The ore should be broken as small as 1 in. if possible, for convenience of feeding, and to save wear on shoes and dies.

Where cost is not prohibitive, he prefers southern hard-pine for mortar blocks. It never checks or seriously changes shape.

There is no objection to using two 12×12 in. sticks in place of one 12×24 in. for battery posts, but they should be perfectly fitted and pin dowelled as well as thoroughly bolted together. Posts constructed in this manner have shown no weakness after 6 years' use. He has found friction clutches on the line shaft the most convenient, speedy, and desirable device for connecting the battery. The tendency in regard to wearing parts is to substitute steel for iron. The cams and tappets are almost universally of hard steel, either chrome or manganese. The cam shaft should be wrought iron, or mild steel, running in soft cast-iron boxes. The stems should be wrought iron, or mild steel, and the bosses and mortars of tough cast iron. For feed water the mill should be supplied with a tank 20 ft. above the mortars to guarantee a constant head. Straight-way cocks are better than the old-fashioned faucets. Upwardly directed jets below the chuck block, one between each pair of dies, avoid the hard packing of sulphurets between the dies, and aid amalgamation. Sickened mercury may be cured by lime or a stronger alkali when grease is the cause. Common salt is often efficient when the trouble is due to mispickel or graphite. The formation of "verdigris" on non-silvered copper plates may be permanently prevented by thoroughly cleaning and drying the plate, scraping till the copper is bright, and rubbing in mercury with canvas or chamois skin, moistened with cyanide of potassium. When well coated the whole is painted over with fine gold amalgam prepared as follows: Sweat a plate that is well coated with gold amalgam, scrape off the latter, grind in a wedgewood mortar with a little mercury, rapidly pour off the mercury, which leaves the coarse amalgam behind, while the mercury poured off is settled 24 hours, and then carefully decanted, leaving the fine amalgam at the bottom. This is of the consistency of cream and ready to be applied. He recommends always retorting newly purchased mercury and then keeping it in porcelain-lined vessels under a layer of dilute nitric acid, one part ordinary strong acid to five parts water.

H. Van F. Furman has continued his series of articles upon gold milling, noticed in THE MINERAL INDUSTRY, Vol. V., p. 715, taking up fine crushing, amalgamation, pneumatic, magnetic, and wet concentration. He gives an outline of the Morning mill, at Mullan, Idaho, and the Hecla mill, at Glendale, Mont.

Cost of Milling.—S. R. Porter gives the cost of milling at the Baliol Gold Mining Co.'s mill, at Sutter Creek, Cal. There are 40 1,000-lb. stamps dropping 4 in. 102 times per minute. The die is 9 in. in diameter and has a "40-mesh punched tin screen." For 27½ days the mill stamped at the rate of 5.35 tons per stamp in 24 hours. The items of expense per ton (2,000 lb.) were labor on batteries and plates, $0.0615; labor on concentrator, $0.0285; labor on rock breakers, $0.0172; labor on ore bin, $0.0319; mill repairs, $0.0274; general mill expenses, $0.0102; mill lighting, $0.0044, and power (water power), $0.0816; making a total of $0.2627 per ton.

CONCENTRATION OTHER THAN GOLD.

H. Nelles Thompson describes the *dressing of Canadian asbestos* at Thetford, Quebec. The ore for treatment is broken by Blake breaker to ¾-in. cube and goes to (1) an inclined screen with 16-mesh, which yields oversize to hand picking (2), and an undersize, not defined; (2) hand picking yields a rich product which goes to rolls (3), and poor waste; (3), rolls set so as not to cut the fibers deliver to screens (4), which are of the flat shaking type, with ¾, ½ and 1/16-in. holes, and yield over ¾ in., not defined; through ¾ on ½ to ¼-in. sieve, giving screenings which go to cyclone pulverizer (5); through ½ on 1/16, not defined; through 1/16 in. which is sold for manufacture of cement, etc.; (5), the cyclone pulverizer sends the beaten product to a 11-mesh screen (6), which yields non-fibrous undersize and non-fibrous oversize to dump, and fibrous oversize, drawn off by a fan to a settling chamber covered by a fine screen.

The fibers from this process still contain considerable sand. To separate this and loosen the fiber a machine is used which consists of two toothed rollers, revolving at equal speed and having a side motion relative to each other. The fibers are loosened and combed apart by this operation.

Three qualities are made: fiber over ½ in. in length, used for spinning; shorter fiber used for mill board; the finest, which mixed with a large proportion of serpentine sand is used for cement.

Tin washing at Mount Bischoff, Tasmania, is described by W. F. Kayser and Richard Provis.* A rock breaker crushes the ore to 2½ in., California stamps of 560 lb. weight with 8-in. drop bring it to 14 mesh, and feed a spitzlutte (1), which yields: first spigot product to jigs (2), second spigot product to jigs (2), and overflow to convex tables (8). The jigs (2), which are two compartment bedded jigs, yield first hutch, smelting ore; second hutch, to finishing jigs (3), and tailings to coarse buddles (4). The finishing jigs (3) yield hutches, second-class smelting ore, and tailings which go to Chile mills (5). The tailings from (2) are treated on coarse buddles, which yield concentrates to Chile mills (5), and tailings. The Chile mills (5), grinding the products from (3) and (4), feed classifiers (6), which yield spigot product to medium buddles (7), and overflow to revolving convex tables (9). The medium buddles (7) yield concentrates to kieves (11), and waste tailings. The revolving convex tables (8), which treat the overflow from the spitzlutte (1) yield concentrates to tables (9), and waste tailings. The revolving convex tables (9), which treat products from (6) and (18), yield concentrates to kieve (11), and tailings, by settling tank to fine buddles (10). The fine buddles (10) yield concentrates, rebuddled and kieved (11), and waste tailings. The kieves (11) yield tops, sent back to their buddles, and bottoms, smelting ore. The plant treats 6,000 tons per month and yields 150 tons of concentrates, or 2½% of approximately pure tinstone. Refer also to article on "Tin" in this volume.

Phosphate washing in South Carolina is described by George Leighton. The crude phosphate goes through a crusher, consisting of a toothed roll, operating against a vertical iron plate, 4 in. from it. The crushed phosphate goes to a log washer, and from the cleaned product are picked out, and sent back to the crusher, any nodules that are imperfectly cleaned.

MAGNETIC AND PNEUMATIC SEPARATION.

J. Price Wetherill describes the magnetic concentrating plant, designed by him for separating minerals not usually considered magnetic. His separator was described in THE MINERAL INDUSTRY, Vol. V., p. 720. His treatment takes much of the useless heavy garnet, fowlerite, and tephroite out upon a picking table, sets aside the franklinite for the oxide furnaces by means of the magnets, and finally concentrates the willemite and zincite for the spelter furnaces upon jigs, throwing away in the tailings the limestone, quartz, mica, and graphite. The ore goes to grizzly (1), with 1½-in. spaces, which makes an oversize to breaker (2), and an undersize to a screen (3). A Blake breaker (2), crushing to 4 in., delivers the ore to a flat screen with 1-in. holes. To save wear the undersize goes first upon the picking belt (4), and the oversize falls upon this cushion. A flat inclined screen (3), with ½-in. holes, delivers oversize to picking belt (4), and undersize to drier (7); a rubber belt picking conveyor (4) yields fowlerite, tephroite, and garnet, picked out as waste, and ore which goes to a breaker (5); from this duplex Blake breaker (5) the ore passes to two trommels (6), with ¼-in mesh. The oversize from these is crushed by rolls and goes with the undersize to the dryer (7). The dryer (7), which handles the products from (3) and (6), is an Edison dryer 3 ft. square and 24

---

* *Proc. Inst. Civ. Eng.*, Vol. CXXIII., 1895-96, p. 379.

ft. high. The ore zigzags down over shelves set at 45°, with the hot gases from a direct fire playing around them. The ore then goes to four trommels (8), with 8-mesh wire cloth; the oversize is crushed by rolls and goes with the undersize to six trommels (9), with 10-mesh screen. The oversize (9), after the nails and sticks have been removed by a 4-mesh trommel, is crushed by rolls and returned to the trommel (9); the undersize goes by the storage bins to separators (10).

The first separators (10) are six Wetherill double magnetic machines, which yield franklinite concentrates to furnaces, and tailings to the sizing trommels (11), of which there are two sets of four each, having screens of 16, 24, 30, and 50-mesh respectively, one set on each side of the mill. They make five sizes of grains, which go by storage bins to the separators (12) on each side of the mill. The separators treating the four coarser sizes are horizontal Wetherill machines, those treating the finest are sloping machines. Each of the five products is treated upon a series of three machines, the tailings of the first going to the second, and of the second to the third in each case. The heads of all the machines consist of franklinite. The tailings of the first four sizes go to jigs (13); those of the finest size are already rich enough in willemite and zincite for the spelter furnaces. On each side of the mill there are four Harz jigs (13), of which Nos. 1, 2, and 4 have four sieves each, while No. 3 has three sieves. These treat the tailings from the magnetic machines, yielding heads, consisting of willemite and zincite to the dryer (14), and waste tailings (calcite, quartz, mica, graphite, etc.). A revolving cylindrical dryer (14), with longitudinal ribs and direct fire, prepares the ore for shipment.

The *separation of wolframite from cassiterite* (tinstone) by means of the Wetherill magnetic separator has been successfully accomplished. The former is sufficiently magnetic to leave the latter.

Edison's magnetic concentrating plant, owned by The New Jersey & Pennsylvania Concentrating Co., situated at Edison, N. J., is approaching completion. The ore, consisting of feldspar and magnetite with a little quartz and apatite, carrying 20% iron and up to 0.25% phosphorus, is mined in an open quarry, using large-scale quarry methods. Mr. Edison holds that $3 coal used in the mill is a cheaper source of power for breaking rock than $260 a ton dynamite used in the mine. The broken rock, in lumps up to 5 tons, is loaded on skips by a steam shovel, and hauled to the crushing plant by a locomotive. Since the formation of slimes causes no loss in the magnetic separation, no attempt is made to sift out the fines after each stage in the crushing. The ore is dumped into the hopper of the giant rolls (1).

(1) The giant rolls are 6 ft. in diameter, with 6 ft. face, and have rows of surface knobs 2 in. high. One roll has two opposite segments of slugger knobs 4 in. high. The space between the rolls is 14 in., not including the knobs. The peripheral speed is 2,827 ft. per minute, and the revolving parts weigh 83 tons. The rolls are connected to the driving pulley by a friction band which slides with a pull of 500 lb. This allows the rolls to crush chiefly by momentum, the velocity decreasing somewhat while a lump is being crushed, and increasing again when the lump has passed, thus avoiding sudden shocks upon the engine, and providing a safety device. The ore then goes to the intermediate rolls (2).

(2) The intermediate rolls are 4 ft. in diameter, with 5 ft. face, have knobs 2 in. high, and are 7 in. apart, not including the knobs. They have the same driving and safety devices as the giant rolls. Their capacity is 300 tons per hour. The ore passes from them by bucket elevator to rolls (3).

(3) The first corrugated rolls have longitudinal corrugations. They are 36 in. in diameter, with 36 in. face, and are 3½ in. apart between a ridge of one and a hollow of the other. The power is transmitted to them through a split wobbler and a breaking pin as a safety device. The ore goes from them to the rolls (4).

(4) The second corrugated rolls are similar to the first, but are set 1½ in. apart. The ore goes from them to rolls (5).

(5) The third corrugated rolls are 24 in. diameter and 20 in. face and are set ½ in. apart. Power is transmitted through a split wobbler. They are held together by springs which prevent breakage in case an unusually hard object is fed. The ore goes from them by elevator to the dryer (6).

(6) The dryer is a tower 8 ft. square and 50 ft. high, and has in it iron plates 8½ ft. long, 8½ in. wide, sloping 45° on the short dimension. They are arranged like a salmon ladder, so that the ore zigzags down through them while the products of combustion from a direct fire passing up play all around them. The ore goes by elevator and conveyor to No. 1 stock house (7), which has a capacity of 16,000 tons. A 700 h. p. compound engine drives all of the above five rolls with the elevators and conveyors in the crushing house. The ore is next taken to the separating house and is first fed to the three-high rolls (8).

(8) The three-high rolls are 36 in. diameter and 30 in. face, and when doing full work are pressed apart to 1½ in. space by the ore. The lower roll revolves 90 times per minute. It must have slow speed to bite the ore. It is supported in fixed boxes, the middle and upper rolls in boxes that are free to move in vertical guides. The lower roll is driven from the main shaft through a split wobbler and breaking pin. The upper and middle rolls are driven from the lower by friction only. The pressure between the rolls is given by seven turns of ½-in. wire rope running over a tight sheave on the lower and a loose sheave on the upper roll shaft. A bight of the rope passes around an overhead pulley, which is raised or lowered to regulate the tension. This device greatly reduces journal friction, since the upper and middle journals serve only as guides. The source of the greater part of the friction is simply the weight of the three rolls (about 20,000 lb.) on the lower journals, although the rolls are pressed together with a force of 125,000 to 150,000 lb.

The ore is fed by aprons so as to pass forward between the upper and middle rolls and backward between the middle and lower. There are two sets of these rolls. The capacity of each set is 500 tons per hour, of which 200 tons is returned oversize from screens, and they crush ore of 0.5 in. to 0.06 in. maximum diameter (about 14-mesh). The ore goes next to screens (9).

(9) There are 60 top screens receiving ore. Under each one of these are three more screens in zigzag position, making 60 batteries of four screens each, or 240 screens in all. Each screen has a net width of 16 in., length 22 in., and slopes 45°. The holes are slots 0.06 in. wide, 0.5 in. long, with long dimension down the slope. They turn out 300 tons of sifted ore per hour. They yield oversize which is elevated back to the rolls (8), and undersize which goes to the 12-in. magnets (10).

(10) The 12-in. magnets have cast-iron cores 4 ft. 6 in. wide, 12 in. long between poles, and 4 in. thick, wound with No. 4 copper wire. Each three of these, in vertical series, are supplied with 15 ampères at 80 volts. The first has the fewest winds, the last the most, causing a proportional increase in magnetic force. There are 20 sets of these, making 60 in all. The tailings of the first, with 7% iron, are treated by the second, and those of the second, with 2.5% iron, by the third; the tailings of the third contain 1% iron. The magnets yield: First, second and third heads containing 40% of iron, which go to the dryer (11), and tailings amounting to 55% of the whole ore, which go to the sand house (19).

(11) This dryer is like the other (6) except that it is 6 ft. square. The ore goes from this to the middlings rolls (12).

(12) The middlings rolls are like rolls (8), and there are two sets of them. The ore next goes to screens (13).

(13) These screens are like (9), except that they have slots 0.5 in. long and 0.02 in. wide. They yield oversize which goes to rolls (12) and undersize to the 8-in. magnets (14).

(14) The 8-in. magnets are 4 ft. 6 in. wide, 8 in. long between poles, and 3 in. thick. There are three of them in series. They have a current of 10 ampères at 120 volts. Their arrangement is like that of the 12-in. magnets; there are 32 sets of three each, making 96 in all. They yield: First, second, and third heads, carrying 60% of iron, which go to the dusting chamber (15), and tailings to the sand house (19).

(15) The dusting chamber: By an air blast acting upon a falling stream of sand the larger part of the apatite is blown out and yields concentrates, carrying 64% iron, to 4-in. magnets (16), and the lighter portion to the dusting magnet (17).

(16) The 4-in. magnets are 4 ft. 6 in. wide, 4 in. long between poles, and 2 in. thick. There are five in series and they are supplied with 17 ampères at 100 volts. Contrary to the arrangement of the previous magnets, the second magnet retreats the heads of the first, the third the heads of the second, and so on, which arrangement requires the magnets to decrease in power down the series. They yield first and second tailings, which are waste and go to the sand house; third, fourth and fifth tailings, which go to the middlings rolls (12); and the heads, carrying 68% of iron, which go to No. 2 and No. 3 stock houses (18).

(17) The dusting magnet is like the 4-in. magnets, but there is only one. It receives 17 ampères at 90 volts, and yields final concentrates to stock house (18), and tailings, sold for paint.

(18) Stock houses No. 2 and No. 3, with a total capacity of 35,000 tons. From these the ore passes in succession through the mixers, the briquetting machines, and the baking ovens.

(19) The sand house is provided with screens for sizing the tailings preparatory to selling them for the various plasters, mortars, and cements.

The bearings of all the machinery are oiled by a pipe system. Between 4,000 and 5,000 bearings are automatically oiled, and the excess flowing back is filtered and pumped to a storage tank holding 4,000 gal.

The briquettes contain iron, 67 to 68%; silica, 2 to 3%; alumina, 0.4 to 0.8%; manganese, 0.05 to 0.10%; lime, trace; magnesia, trace; sulphur, trace; phosphorus, 0.028 to 0.033%; resinous binder, 0.75%; water, none.

Magnetic Concentration of Sulphide Ores.—G. M. Gouyard of Denver, Colo., has obtained some interesting results in the magnetic concentration of ores carrying pyrite, galena, and blende, after roasting. His figures show that when roasting for magnetic sulphide of iron the magnetic concentrates run low in lead and zinc; but when roasting for magnetic oxides a large percentage of both goes with the magnetic portion. His results are summarized in the following table:

Test.	Per Cent. of Sulphur in—		Per Cent. of the Total Metals Which Were Found in the Magnetic Portion.				Per Cent. of the Ore Fed in—	
	Unroasted Ore.	Roasted Ore.	Ag.	Pb.	Fe.	Zn.	Magnetic Portion.	Non-Magnetic Portion.
A	24.0	14.7	22	15	54	10	25	75
B.	23.7	7.8	36	43	77	19	44	56
C.	31.8	6.7	73	76	96	41	72	28
D (*a*)	....	....	95	58	97	100	97	3
E (*b*)	....	....	60	81	83	29	60	40

(*a*) At high temperature. (*b*) At ordinary temperature.

It appears from this table that as the sulphur is more completely removed a larger magnetic product is made, containing a larger percentage of the total silver, lead, and zinc, as well as of the iron. In discussion, Marcus Ruthenburg thought the results thus far obtained were not better than those of wet concentration.

*The Magnetic Plant on the Island of Svartö.**—A magnetite with 1½ to 3% phosphorus as apatite, crushed in a Blake breaker, dried in a revolving cylinder, pulverized, separated by Ball-Norton magnetic machine, yields magnetite high in iron and low in phosphorus. The waste is treated in a hydraulic classifier, and yields coarser product to jigs and finer to revolving slime tables and percussion tables.

C. Blömeke describes *the new Pape-Henneberg pneumatic classifier,*† which consists of a cylindrical box or chamber standing on end. The ore which has been reduced by graded crushing is systematically fed through a narrow annular opening at the circumference of the upper base, while the air is exhausted from the center by a powerful suction fan. The lower portions of the cylinder walls are made of fine sieve cloth, through which the air passes on its way to the fan, deflecting the particles toward the center of the cylinder, the lighter being carried the further, and the finest dust being drawn off by the fan to a dust chamber. Five annular concentric troughs in the bottom of the cylinder catch the different grades, and a revolving arm with five scrapers collects and discharges these five products.

COAL WASHING.

A new design of rolls for crushing coal, preparatory to coking, has lately been put on the market by the Jeffrey Mfg. Co. The rolls are finely corrugated diagonally; one set of corrugations crosses the other, while one roll is

---

* Bennett H. Brough, Society of Arts, London, Dec. 8, 1897.

† *Oest. Zeits.*, Vol. XLV., 1897, pp. 311, 328.

driven twice as fast as the other. The capacity is from 30 to 60 tons per hour, depending on the size and quality of the coal.

James Rigg* describes and discusses the standard devices for tipping coal with the least breakage, also the standard forms of grizzlys, screens, and picking tables.

The Schwidtal gyrating screen† has two sieves, one above the other, which balance each other. They are connected by four nearly vertical parallel levers, which have ball and socket connections with the two screens, above and below, and at or near their centers ball and socket bearings. On each of two opposite sides is a vertical shaft carrying two cranks, at 180° with each other, one for each screen box. These two shafts are driven by bevel gears from a single horizontal shaft. This arrangement prevents the vibration of the frame by balancing one screen against the other. A screen with 20 mm. diameter holes above, and 10 mm. below, at 125 revolutions (size not given), treated 50 metric tons of coal per hour.

Removal of Fines by an Air Blast.—Parent‡ gives the methods of separating the fine sizes of coal from the coarse, by air blasts, that are used at a number of continental mines. At the Rhein-Preussen mine coal below 7 mm. is blown up an inclined plane sloping 60° with the horizontal. The fines are carried over, while the coarse part slides down the inclined plane. To aid in this, narrow sloping baffle-plates are placed near the surface of the inclined plane.

At the Zollverein mine the same size of coal is blown, but the angle of the plane is 45°. At this mine 3 mm. and less are lifted, while 4 mm. and over drop. At St. Louis, France, the air current is blown upward in a curved, nearly vertical pipe.

In the works of the Anzin Company, at La Grange, the size of coal blown is below 8 mm. and it is blown by a jet 1 m. by 1 cm. in section, up an inclined plane sloping 45°. In one mine 840 kg. of fines are blown out of 11,800 kg. fed to the machine, using 936 cu. m. of air per minute at 44 mm. water pressure. The process, combined presumably with jigging, yields: Dust, 8%, carrying 16% ash; coal, 70.56%, carrying 6% ash; slime, 7.08%, carrying 10% ash; slate, 14.35%, carrying 72.7% ash. The separation of fine coal by this method at the Colorado Fuel & Iron Co.'s plant is noticed below.

Settling Tank for Coal Slime.—At the Courl Colliery, East Dortmund, a settling tank for fine coal and slimes, in the form of an inverted pyramid, is used. The water carrying the dirt is fed at the center of the tank and overflows into a trough around the margin. A perforated expanding tube, filled with nut coal, to act as a filter, stands over the apex, extending above the water. When the tank is full of dirt the feed is deflected to another tank, the water is drained off through the filter, by opening a cock below, the filter is then lifted out and the dirt is discharged through a gate at the apex of the tank.

J. V. Schaefer describes *a Luhrig plant* for concentrating coal, used by the Alexandria Coal Co., at Greensburg, Pa. The nut and fine coal mixed go to

---

* *Proc. Inst. Civ. Eng.*, December, 1896.

† *Zeits. für Berg-. Hütten- und Salinenwesen*, Vol. XLV. 1897.

‡ *Annales des Mines*, Series IX., Vol. XI., 1897, p. 128.

a three-sieve trommel yielding Nos. 1, 2, and 3 nut, which are treated on jigs and the undersize treated in spitzkasten. The jigs make clean coal, unwatered in a trommel with ⅜-in. holes. The oversize goes to the finished coal bins and is used for coking, while the undersize goes to the spitzkasten. The slaty coal from the above jigs goes to rolls and to a two-sieve trommel, returning its oversize to the rolls. The two undersizes are jigged on feldspar jigs and yield clean coal for fuel, and slate as waste. The spitzkasten makes nine spigot products which are treated on nine jigs and yield clean coal to an unwatering trommel with ⅛-in. holes and slate as waste. The clean coal goes to the coking coal bin, and the drainings to a sludge tank, 75 ft. long, 11 ft. wide, and 8 ft. deep. A chain scraper at the bottom of this automatically brings the settlings to one end, and an elevator raises them to the coking coal bin. The cost of washing at this plant is 3c. a ton. The coke made from the washed coal contains less than 10% ash, and 1% sulphur.

A Luhrig plant at De Soto, Ill., makes coal for market in four sizes. The mine coal, sprayed with water, goes to a shaking screen with two sizes of screens, which yields: On 5-in. hole, hand picked on the screen, through 5 in., on 2½ in. hand picked on a belt conveyer, and a product passing through a 2½-in. hole, which goes to a three-sieve trommel. The latter yields, on 1½, ⅞, and ⅜-in. screens, products which by jigging give coal, drained on a shaking screen, and slaty waste. The material passing through the ⅜-in. holes goes to spitzkasten, which yields six sizes, treated on six fine jigs, that yield clean coal with slate as waste. A sludge tank is used for recovering the water to be used again.

Schaefer also reports results of coal washing by the Luhrig plants, at N. Motherwell, on $\frac{5}{16}$ to $\frac{1}{64}$-in. stuff, where the ash is reduced from 22 to 4%. At Acton Hall, Yorkshire, the coal formerly used for fuel now yields sludge clean enough for coking. At Kattowitz, in Upper Silesia, the ash is reduced from 47 to 5%. The pyrite extracted is used for acid making and pays for the process. At Belt, Montana, in 1 and 1½-in. coal the ash is reduced from 29.69 to 7.35%, and in ½ to 1-in. from 18.74 to 5.56%. At Union Bay, Vancouver, where fixed ash is 7.5%, the ash is reduced from 35.5 to 8.5%.

Cunningham & Co. have contracted to build an 800-ton Luhrig plant for the Rochester & Pittsburg Coal and Iron Co., at Punxutawney, Pa. This will be the largest coal-washing plant in the United Sates.

R. M. Hosea, after trying the Luhrig system and the Campbell bumping table, adopted the *Forrester* modification of the Harz jig in the Colorado Fuel and Iron Co.'s plant at Sopris. His plant has a capacity of 400 to 500 tons in 10 hours, and consists of:

(1) A grizzly with bars 1½ in. apart, the oversize from which is, presumably, shipped as lump coal; the undersize goes to a second grizzly, yielding oversize, which is crushed by toothed rolls and then goes with the undersize to the trommel (2) which is 6 ft. in diameter, 18 ft. long, with holes ½ and 1½ in. square respectively. It yields three products; that on 1½ in. is washed on two jigs, through 1½ on ½ in. is washed on four jigs, through ½ in. goes to the blast apparatus (3); the blast apparatus yields material through ½ on $\frac{1}{16}$ in., which is jigged on four jigs; the fine dust below $\frac{1}{16}$ in. is a little better than unwashed coal, and joins the washed coal after the latter has passed

through the Stedman pulverizer, the two going to the coke ovens together. The coal on the way from the jigs to the pulverizer is drained on the conveying belts, the water is pumped into a series of sludge tanks. The settlings in the first have 75% ash and those in the others only 4%. The better quality of settlings is sent to the coke ovens. The water is pumped back to the reservoir and used over again.

At the Lens colliery, in Pas de Calais, France, coal from 1 to 25 mm. is sized upon four sieves with holes 3, 6, 10 and 18 mm. in diameter respectively. The smallest size goes to the coking ovens without washing; the other four sizes are jigged, each on its own feldspar jig, the washed coal going to the coke ovens.

At Tracy City, Tenn., a *Robinson plant* is operated which washes 400 tons per day. This is a conical washer with revolving arms, as described in THE MINERAL INDUSTRY, Vol. IV., p. 729. The cost of washing is 2 to 3c. per ton, and the ash is reduced 30%. There are now about 30 Robinson washers in use in the United States. The washing costs 1 to 2c. per ton in many plants. The Jeffrey Mfg. Co. has a full-sized plant for testing coals by this system.

An *Elliot* trough washer, at the Erbrich mine, in the Ratibor district, Prussia, washes 60 tons of coal per day, using 800 liters of water per minute. The unwashed coal carries 15% ash, and the washed coal 5 to 6%. The slate has 50 to 60% ash. Only one man is required to look after the plant.

R. M. Hosea describes the plant of the Colorado Fuel and Iron Co., at Newcastle, Colorado. The coal is dumped upon a grizzly 20 by 6 ft. with 1½-in. spaces. The undersize goes to a shaking screen with holes 1½ in. square; the undersize of this upon a similar screen with ½-in holes. The three oversize products are shipped at once; the undersize is waste. The capacity is 1,000 tons in 10 hours.

Thomas Gillott gives an outline of a screening plant at the Kirby colliery, England. The sizes of screens are not mentioned. Walter H. Mungall describes a screening plant for coal at the Mossbeath colliery.† The three shafts are all furnished with grizzlies, with bars 1½ in. apart, making oversize and undersize. From two shafts the oversize goes to a screening and picking belt, and yields lump coal, lump waste and fine waste. From the third shaft it goes to a close picking belt which yields waste and coal that is divided into coarse and fine by a shaking screen. The undersize of the grizzly at each of the three shafts goes to gyrating screens, with two sieves each, yielding oversize to a picking belt, which gives coal and waste, middle size which is sold, and fine coal which is burned under the boilers.

Coal from Culm Banks.—The Reading Railroad Co. recovered last season 50,000 tons of coal from the culm banks of the Calmia colliery, making a profit of at least $1 per ton on the washed product. In one instance a quantity of small-size coal, which had been rejected during the rush of war time, was recovered.

---

† *Trans. Fed. Inst. Min. Eng.*, April, 1897.

FATAL ACCIDENTS IN COAL MINING IN THE UNITED STATES AND CANADA.

By Frederick L. Hoffman.

A thorough and comprehensive knowledge of the dangers and fatal consequences incident to any given occupation is not merely desirable but is even a matter of absolute necessity for a large variety of purposes.

Among the occupations which are usually classed as hazardous none is considered by the majority of writers more dangerous or fatal to life and limb than coal mining in this country, and while one would naturally expect that such a sweeping assertion should be based on a careful and comprehensive study of the available data, it does not appear as though a detailed study of the subject has ever been made by any one familiar with the necessary facts.

While the detailed data for such an investigation are difficult to obtain, and in some instances are wanting in accuracy and completeness, it may be stated with full confidence that in general the statistics of coal-mining operations as carried on in this country can be relied upon as representing fairly the actual conditions, and that the returns relating to fatal accidents will give approximately the risk or dangers incident to the operation of American coal mines.

It is the purpose of this paper to present to the readers of The Mineral Industry the essential facts as they pertain to the occurrence of fatal accidents in the coal mines of the various States of this country, and some of the provinces of Canada, together with such information as may be necessary to explain the associated factors making for a high or low mortality rate in any given section of North America. I have been compelled to limit myself to a bare recital of the facts and the calculation of fatality rates, since a complete discussion of the occurrence of accidents, their causes and their prevention, would easily fill a volume of its own, but I hope in future volumes of The Mineral Industry to contribute further papers which will deal with the most important aspects of the whole question of fatal accidents in mining operations.

The mortality rates have in all cases been calculated on the number of persons employed, but additional ratios are given which will show the annual product per employee, as well as the annual production per life lost, but want of space has made it necessary to limit the detailed discussion to the fatality rates per 1,000 persons employed.*

---

* Wherever the expression "product per employee" or "product per life lost" is made use of the ratio is based on the annual output in short tons.

Wherever it has been possible I have given the local fatality rates by inspection districts to enable the reader to trace with more exactness the possible local influences, favorable or otherwise, which may account for a low or high mortality, as the case may be.

It is hardly necessary for me to add that the utmost care has been taken to insure accuracy of the data used, and unless otherwise stated all the statistics are official, and in most instances verified by correspondence with the mine inspectors in charge of the compilation of the facts employed in this investigation.

It has been my aim to give, in all cases, as complete returns as possible for the various States and Provinces, and in all cases a special effort has been made to obtain the collected statistics from the beginning of the inspection service to the close of 1897. Unfortunately, it has not always been possible to complete the various tables, since in a few States the statistics for the earlier years were not collected with that care which is manifest in the returns for more recent years. For a few of the coal-producing States of lesser importance no returns, as regards accidents, are available, but these omissions may be looked upon as unimportant with the exception of the information from Montana, Virginia, and Wyoming, which, much to my regret, could not be obtained.

Since some standard of comparison is desirable and necessary for an intelligent comprehension of the tables which are to follow, I have calculated a general average rate for the country at large on the basis of the returns for the various States for the period 1887–96, or for such years of this period as proved available for the end in view. The table which follows will show the details of this calculation, and prove of interest as a comparative standard of accident liability in the coal mines of the United States.

FATAL ACCIDENTS IN COAL MINING IN THE UNITED STATES.*

States and Territories.	Period.	Number of Persons Employed.	Number of Lives Lost.	Mortality Per 1,000.
Alabama	1893-94	22,153	36	1.63
Colorado	1887-96	63,570	300	4.72
Illinois	1887-96	331,001	601	1.82
Indiana (*a*)	1887-96	58,222	135	2.32
Indian Territory	1894-97	14,094	53	3.76
Iowa	1888-95	82,161	187	2.28
Kansas (*b*)	1889-97	62,957	102	1.62
Kentucky	1887-96	70,632	106	1.50
Maryland	1890-97	31,907	52	1.63
Missouri	1890-97	56,535	124	2.19
New Mexico	1895-97	4,462	42	9.42
Ohio	1887-96	258,241	396	1.53
Pennsylvania, Anthracite	1887-96	1,283,448	4,049	3.15
Pennsylvania, Bituminous	1887-96	736,818	1,384	1.88
Tennessee	1893-95	15,638	65	4.16
Washington	1892-96	14,679	157	10.70
West Virginia	1891-96	106,436	351	3.30
Total bituminous		1,928,516	4,091	2.12
Total anthracite		1,283,448	4,049	3.15
Aggregate total		3,211,964	8,140	2.53

(*a*) Excepting the years 1889 and 1894. (*b*) Excepting the year 1892.

---

* To show the error of the opinion commonly held that coal mining is an extra hazardous employment, statistics of the death rate from accidents in other employments are appended as follows: Fishermen (Gloucester, Mass., 1885-97), 14.71 per thousand; Railway Trainmen (United States, 1890-96), 8.03; Railway Switch and Yardmen (United States, 1890-96), 6.08; Police Department, (65 cities, U. S., 1885-97), 0.66; Iron Ore Miners (Michigan, 1892-96), 5.14; Metal Miners (Colorado, 1896-97), 3.89; Copper Miners (Michigan, 1892-96), 3.57; Anthracite Coal Miners (Pennsylvania, 1887-96), 3.15; Lead and Zinc Miners (Missouri, 1892-97), 2.59; Fire Department Employees (70 cities, U. S., 1885-96), 2.25; Bituminous Coal Miners (United States, 1887-96), 2.12; Life Saving Service (United States, 1886-96), 1.42; Railway Mail Clerks (United States, 1885-97), 1.06; Street Railway Service (Massachusetts, 1893-96), 0.28 per thousand.

There are in this country 18 States and Territories which in 1896 produced more than 1,000,000 short tons of anthracite or bituminous coal, and of this number 15 are represented in the table. The exceptions are Montana, which in 1896 produced 1,157,722 short tons; Virginia, with an output of 1,018,237 tons, and Wyoming, with a production of 2,273,928 tons in 1896. Hence the table may be looked upon as representative for the country at large, covering approximately 96.7% of the total output of 1896.

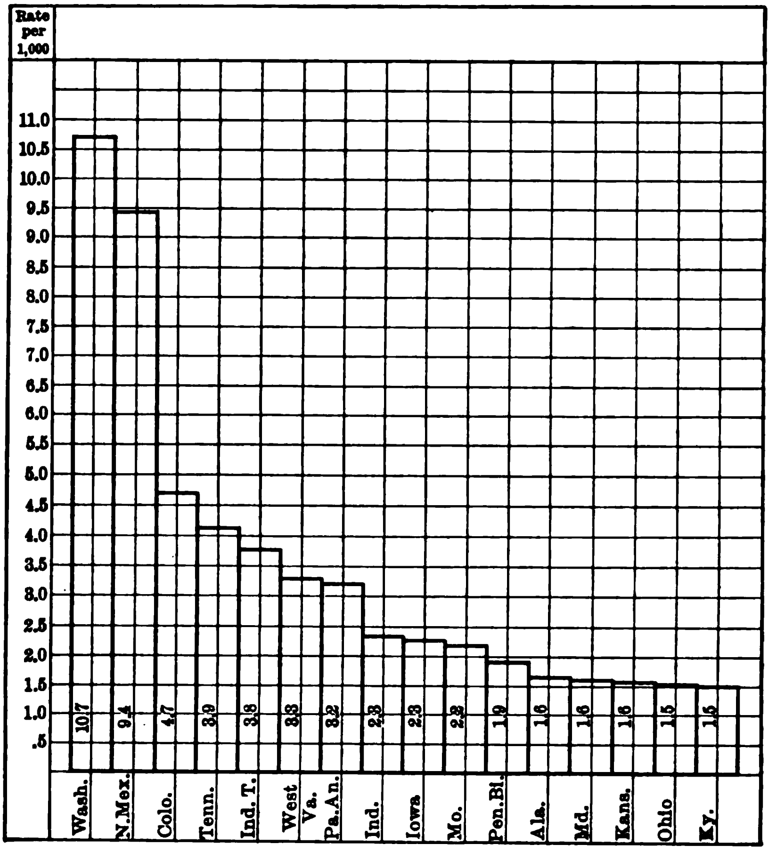

DIAGRAM SHOWING THE RANK OF THE PRINCIPAL COAL PRODUCING STATES OF THE UNITED STATES AS TO THE OCCURENCE OF FATAL ACCIDENTS IN COAL MINING DURING 1887-1896.

The aggregate number of miners exposed to risk of accident one year is shown to have been 3,211,964, among whom 8,140 fatal accidents were reported as having occurred during the period under observation. The average mortality from fatal accidents in and about American coal mines was, therefore, 2.53 per 1,000 for both bituminous and anthracite mines, or 2.12 per 1,000 for the former and 3.15 per 1,000 for the latter. It is, therefore, made plain at the outset that the accident liability in anthracite mines is considerably in excess of the accident liability of men employed in the mining of bituminous coal, so much so, that the fatality rate of the former is shown to be 1.03 per 1,000 in excess of the fatality rate of the latter. Had the anthracite rate prevailed in the bituminous regions 1,984 more persons would have lost their lives, while 1,328 less would have been killed had the bituminous rate prevailed in the hard coal regions.

Since anthracite coal mining is, for all practical purposes, confined to Pennsylvania, while bituminous coal is mined throughout the country, from Alabama to Wyoming, I have thought it preferable, unless otherwise stated, to employ the average rate for bituminous mines in making comparisons between the various States and the country as a whole.

It will be observed, on examination of the table before us, that the accident liability in coal-mining operations varies considerably for the different States, so much so, that while the lowest mortality rate is found to be only 1.50 for the State of Kentucky the highest rate is shown to have been 10.70 per 1,000 for the State of Washington. The relative rank of the various States is shown in the preceding diagram.

It is made apparent by this method of comparison that the States in which accidents in coal mining are proportionally most common are in the order named: Washington, New Mexico, Colorado, Tennessee, Indian Territory, and West Virginia—all of which have a fatality rate above the average mortality common to the anthracite coal field of Pennsylvania, while the Pennsylvania bituminous coal fields, and the States of Alabama, Maryland, Kansas, Ohio, and Kentucky, in the order named, experienced a fatality rate below the bituminous average of the country at large. How far these rates are to be explained by local conditions will be shown when each State or section of the country is discussed in detail.

As has been stated, I have not always been able to obtain a complete record of the mining casualties of the different States for even so short and so recent a period as the decade 1887–96, but my study of the available data has led me to include the returns for even short periods, since a careful examination disclosed the fact that the same would fairly represent the average of the normal conditions prevailing in those sections. While this deficiency is much to be regretted, it is even more so in view of the difficulty of calculating an annual average fatality rate for the country at large for each of the years forming the period 1887–96, but from such data as I have been able to obtain I have been able to prepare the following table, which will show the number of States reporting; the number of men employed; the number of lives lost, together with the corresponding death rates for each year of the decade 1887–96.

FATAL ACCIDENTS IN COAL MINING IN THE PRINCIPAL COAL-PRODUCING STATES OF THE UNITED STATES.

Year.	Number of States.	Number of Persons Employed.	Number of Lives Lost.	Mortality Per 1,000.
1887	5	221,534	497	2.24
1888	7	250,588	626	2.41
1889	7	262,142	647	2.47
1890	10	272,031	690	2.54
1891	11	311,938	911	2.92
1892	11	329,844	852	2.59
1893	14	375,700	930	2.49
1894	14	385,025	935	2.43
1895	15	384,589	1,002	2.61
1896	13	371,608	1,026	2.76
1887–96		3,173,494	8,122	2.56

none seem to have been convicts. The number of white and colored persons, as well as the number of free and convict miners, not being known, it is not possible at the present time to calculate rates which would show whether race or condition of servitude materially affect the local liability to fatal accidents in coal mining.

Arkansas.—No statistical information as to the occurrence of fatal accidents in coal-mining operations in this State seems available. The annual production of coal in Arkansas commenced in 1870 and has increased from 125,000 short tons in 1886 to 889.750 short tons in 1896, while the number of persons employed was approximately 1,300 in 1896.

California.—The product of coal in California in 1896 was only 69,449 short tons, while less than 200 persons were employed during that year. No information seems ever to have been published as to the occurrence of fatal accidents in the California coal mines.

Colorado.—We have an exceptionally complete record of the accidents which have occurred in the coal-mining operations of this State during the 14 years 1884–97, and the table which follows will, therefore, prove of exceptional interest and value:

FATAL ACCIDENTS IN COAL MINING IN COLORADO.

Year.	Persons Employed.	Lives Lost.	Mortality per 1,000.	Product per Employee.	Product per Life Lost.
1884.............	2,122	64	30.16	533	17,657
1885.............	2,154	9	4.18	649	155,422
1886.............	2,085	6	2.88	689	239,369
1887.............	3,138	12	3.82	571	149,311
1888.............	5,570	29	5.21	392	75,361
1889.............	5,609	23	4.10	428	104,375
1890.............	7,052	16	2.27	436	192,236
1891.............	6,822	30	4.40	515	117,068
1892.............	7,578	34	4.49	498	110,919
1893.............	7,286	46	6.31	542	85,788
1894.............	6,212	19	3.06	482	157,580
1895.............	7,549	23	3.05	475	155,756
1896.............	6,754	68	10.07	508	50,459
1897.............	7,016	35	4.99	....	....

The average fatality rate for the decade 1887–96 was 4.72 per 1,000 in contrast to the average of 2.12 per 1,000 for the bituminous coal fields of the country at large. In other words, fatal accidents in coal mining were more than twice as common in Colorado as in bituminous coal mining in the United States at large, and the only States with a higher ratio of fatalities were Washington and New Mexico.

The highest recorded mortality for single years occurred in 1884, when the rate reached 30.16 per 1,000, while the lowest mortality occurred in 1890, when it was 2.27 per 1,000. Considering the 14 years covered by this table as two periods of seven years each, the mortality rate during the first seven years was 5.73 per 1,000, against a ratio of 5.18 per 1,000 during the last half of the period under observation. While there has been a slight decline, the following diagram would indicate that the same cannot be looked upon as indicatvie of a material improvement in the accident liability in this State in the near future.

In view of these facts Colorado must be looked upon as a State in which accidents in coal mining are of exceptional frequency, and as one in which comparatively slight and unimportant improvements have taken place during recent years. Whether the exceptionally high mortality is general or confined to a limited area of the Colorado coal field cannot be stated, since no separate returns are made for the various coal-producing sections of the State.

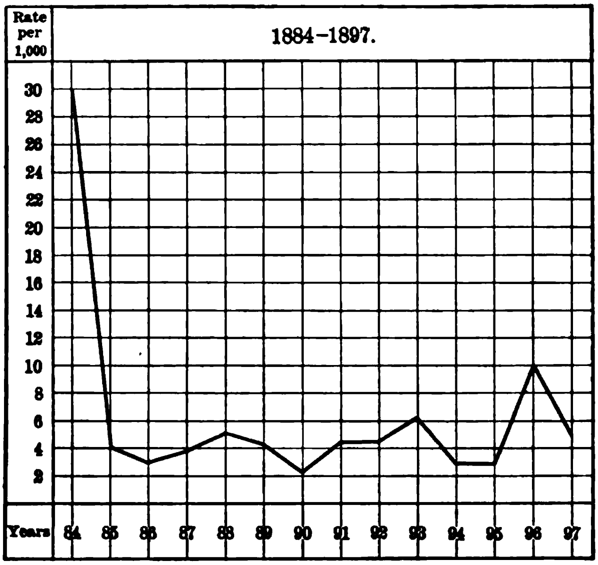

DIAGRAM SHOWING THE FLUCTUATIONS IN THE FATALITY RATE IN COAL MINING IN COLORADO.

Georgia.—The coal product of Georgia was only 246,012 short tons in 1896, giving employment to a little more than 800 men. No statistics of the occurrence of fatal accidents in the coal-mining operations of this State are published.

Illinois.—This State ranks second among the coal-producing States of this country, and such returns as are available will therefore prove of exceptional interest and value. The annual output has increased from 12,123,456 short tons in 1883 to 19,786,626 in 1896. The available statistical returns for this State, as regards the occurrence of fatal accidents in coal-mining operations, are limited to the period 1883–96, and for the separate mining districts to the period 1883–95.

FATAL ACCIDENTS IN COAL MINING IN ILLINOIS.

Year.	Persons Employed.	Lives Lost.	Mortality per 1,000.	Product per Employee.	Product per Life Lost.
1883	23,959	134	5.59	506	90,474
1884	24,575	46	1.87	497	265,393
1885	25,446	39	1.53	465	303,448
1886	25,846	52	2.01	432	214,908
1887	26,804	41	1.53	463	303,002
1888	29,410	55	1.87	487	260,512
1889	30,076	42	1.40	466	333,745
1890	28,574	53	1.85	535	288,102
1891	32,951	60	1.82	475	261,018
1892	33,632	57	1.69	531	313,378
1893	35,390	69	1.95	564	289,124
1894	38,477	72	1.87	445	237,689
1895	38,630	75	1.94	459	236,478
1896	37,057	77	2.08	534	256,969

The average fatality rate for the decade 1887–96 has previously been stated to have been 1.82 per 1,000, against an average rate of 2.12 per 1,000 for the bituminous coal fields of the country at large; it was, therefore, 0.30 per 1,000 below the general average. The highest recorded mortality occurred in 1883, when the loss of life in Illinois coal mines was 5.59 per 1,000, while in 1889 the lowest reported mortality occurred with a loss of only 1.40 per 1,000. Considering the 14 years 1883–96 as two periods of seven years each, the rate during the former was 2.19 per 1,000 against 1.89 during the latter, a decrease of 0.30 per 1,000 in the accident liability in the coal-mining operations of this State. For the purpose of additional clearness I add the above diagram, which will show the fluctuations in the fatality curve during the 14 years 1883–96.

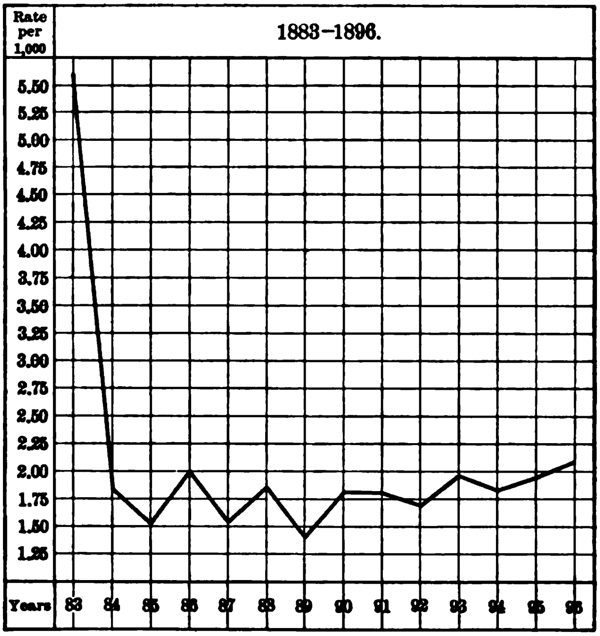

DIAGRAM SHOWING THE FLUCTUATIONS IN THE FATALITY RATE IN COAL MINING IN ILLINOIS.

FATAL ACCIDENTS IN COAL MINING IN ILLINOIS ACCORDING TO INSPECTION DISTRICTS. (*a*)

Year.	First District.	Second District.	Third District.	Fourth District.	Fifth District.	State.
1883	10.44	0.31	4.42	3.62	4.26	5.59
1884	1.37	1.66	2.39	2.38	1.93	1.87
1885	1.34	0.88	1.15	2.63	1.58	1.53
1886	1.84	1.67	2.26	1.73	2.63	2.01
1887	1.77	1.23	1.02	0.61	2.81	1.53
1888	2.20	1.02	1.90	1.57	2.35	1.87
1889	1.55	0.67	1.17	1.41	1.91	1.40
1890	1.94	1.22	1.98	1.93	2.05	1.85
1891	1.64	0.79	1.39	2.04	3.13	1.82
1892	1.04	0.21	1.70	3.67	1.77	1.69
1893	1.93	0.86	1.72	1.42	3.69	1.95
1894	1.85	1.34	1.41	2.45	2.27	1.87
1895	1.66	1.67	2.42	1.87	2.23	1.94
1883-95	2.27	1.06	1.86	2.10	2.52	2.02

(*a*) Rates per 1,000 of persons employed. The State was redistricted in 1896, hence the returns for that year cannot be employed.

It will be observed that the mortality declined very largely after the first year of the period covered by the diagram. The lowest point was reached in 1889.

Considering the State by inspection districts some very important differences in the local liability to fatal accidents manifest themselves. The preceding table will show the mortality rates per 1,000 for each of the five mining inspection districts for the period 1883–95.

According to this table the Fifth Inspection District experienced the highest average mortality, while the Second District experienced the most favorable rate during the period under observation. It is further shown that the high and low rates in the various districts are fairly constant.

Indiana.—The coal area of this State is an extension of the Illinois or Central coal field, and extends over the southwestern portion of the State. The annual production has increased from 3,000,000 short tons in 1886 to 4,068,124 tons in 1896. The statistical returns as to persons employed and the occurrence of fatal accidents in the mining operations of this State are of a less satisfactory nature than those of the preceding State, and it is due to the courtesy of Mr. Robert Fisher, the present State Inspector of Coal Mines, that I am enabled to give the returns for a number of years for which no official reports have been made. The table which follows is wanting considerably in completeness, and for the earlier years in accuracy, but it is highly probable that for the area represented in the returns the statistics are fairly accurate, with the possible exception of the two years 1890 and 1891.

FATAL ACCIDENTS IN COAL MINING IN INDIANA. (*a*)

Year.	Persons Employed.	Lives Lost.	Mortality per 1,000.	Product per Employee.	Product per Life Lost.
1881	4,567	10	2.19	434	198,412
1883	5,403	11	2.04	569	279,278
1884	5,716	9	1.57	443	281,244
1885	6,502	7	1.08	365	339,286
1886	6,406	7	1.09	468	428,571
1888	6,685	17	2.54	470	184,763
1890	6,550	5	0.76	505	661,147
1891	6,975	5	0.72	426	594,695
1892	7,600	19	2.50	591	236,569
1893	7,431	22	2.96	616	208,224
1895	7,885	23	2.92	547	187,489
1896	7,112	28	3.94	572	145,290
1897	7,984	16	2.00	....	....

(*a*) No information for the years 1882, 1887, 1889, 1894 is obtainable.

According to the first table of the series the average mortality from accidents in coal mining in this State was 2.32 per 1,000 during the decade 1887–96 against an average of 2.12 per 1,000 for the bituminous coal fields of the country at large. The local mortality is therefore 0.20 per 1,000 in excess of the general mortality, and this average is possibly lower than it would have been but for the probably defective returns of 1890 and 1891. There are no definite indications of a permanent and material improvement; on the contrary, the tendency would seem to be toward an increase in the liability to fatal accidents in the coal-mining operations of Indiana.

Indian Territory.—Coal-mining operations in Indian Territory are of comparatively recent date. In 1886 the production exceeded 500,000 short tons, and it had increased to 1,235,333 tons in 1896.

The following table is unfortunately limited to the four years 1894–97, for which the information has been collected and published.

FATAL ACCIDENTS IN COAL MINING IN INDIAN TERRITORY.

Year.	Persons Employed.	Lives Lost.	Mortality per 1,000.	Product per Employee.	Product per Life Lost.
1894............	3,290	13	3.95	326	82,508
1895............	3,648	6	1.64	337	204,740
1896............	3,686	12	3.26	335	102,944
1897............	3,470	22	6.34	....	....

It was shown in the first table of the series that the average mortality from fatal accidents in coal mining in this Territory was 3.76 per 1,000 against an average rate of 2.12 for the country at large. On examination of the table before us it appears that during the year just passed the mortality rate reached 6.34 per 1,000, while during only one year did the rate fall below the general average. The returns would therefore indicate an exceptional local liability to fatal accidents in coal-mining operations, with no indications toward a diminution of the rate. The employment of negroes in mining in this section is common, and this factor may possibly explain part of the excessive mortality. Most of the 22 killed in 1897 were negroes, Italians, Poles, or other foreigners, but no Indians seem to have been killed in mining operations during the year. Unsettled conditions, the rapid influx of a new population, the introduction of machinery and other new methods of mining, may all have contributed to place this Territory among those coal-producing sections of the country which must be looked upon as representing either inherent or preventable conditions unfavorable to the safety of persons employed in coal-mining operations.

Iowa.—The reports of the State Mine Inspector are made biennially, the first of which was published in 1883. The statistical data pertaining to persons employed, and fatal accidents reported as having occurred, are, however, limited to the period 1888–95, the report for the last two years not having as yet been made public. The table which follows will show the annual average mortality for each of the eight years of the period under observation:

FATAL ACCIDENTS IN COAL MINING IN IOWA.

Year.	Persons Employed.	Lives Lost.	Mortality per 1,000.	Product per Employee.	Product per Life Lost.
1888............	11,115	28	2.52	446	176,878
1889............	10,970	35	3.19	374	117,010
1890............	9,908	13	1.31	406	309.365
1891............	9,130	19	2.08	419	201,342
1892............	9,307	24	2.58	410	159,167
1893............	10,486	29	2.77	361	130,690
1894............	10,258	19	1.85	368	198,756
1895............	10,992	20	1.82	363	199,792

The average mortality for the eight-year period covered by this table was 2.28 per 1,000, or 0.16 per 1,000 in excess of the normal average for the bituminous coal fields of the country at large. The highest recorded mortality occurred in 1889 when the rate reached 3.19 per 1,000, while during the year immediately following the rate diminished to 1.31, the lowest on record for the State. Considering the eight years 1888–95 as two periods of four years each, it appears that during the first four years the average mortality was 2.31 per 1,000 against an average of 2.24 during the last four years. There has, therefore, been a very slight decrease in the accident liability in the mining operations of this State during recent years. Considering the local accident liability by districts, much information of interest and value is brought out in the table which follows:

FATAL ACCIDENTS IN COAL MINING IN IOWA ACCORDING TO INSPECTION DISTRICTS. (a)

Year.	First District.	Second District.	Third District.	State.
1888	1.91	5.27	1.34	2.53
1889	3.35	6.40	3.22	3.19
1890	0.78	1.75	1.53	1.31
1891	1.76	2.02	2.54	2.08
1892	1.54	3.44	2.73	2.58
1893	2.98	3.13	1.92	2.77
1894	1.84	1.79	1.96	1.85
1895	1.67	2.94	0.88	1.82
1888–95	2.06	3.20	1.58	2.28

(a) Rates per 1,000 persons employed.

Of the three inspection districts into which the State is divided the highest average mortality of 3.20 per 1,000 occurred in the second, while the lowest occurred in the third. On close examination it will be found that all of the three districts have at times experienced exceptionally heavy death rates, and it is therefore difficult to draw definite conclusions from the rather meager information before us. It is quite clear, however, that the second district must be looked upon as one in which fatal accidents are likely to occur more frequently than in other parts of the Iowa coal fields, while for none of the three districts can it be said that they show definite indications of a permanent reduction in the liability to fatal accidents.

Kansas.—The table which follows will show the mortality from accidents in coal mining in this State for a period of eight years:

FATAL ACCIDENTS IN COAL MINING IN KANSAS.

Year.	Persons Employed.	Lives Lost.	Mortality per 1,000.	Product per Employee.	Product per Life Lost.
1889	5,956	12	2.01	361	179,397
1890	4,523	8	1.77	556	314,507
1891	6,201	13	2.08	444	211,662
1893	9,891	15	1.52	291	192,129
1894	10,083	26	2.58	358	138,893
1895	9,021	10	1.11	354	319,084
1896	8,801	12	1.36	363	265,979
1897	8,476	6	0.71	....	....

A few scattered returns for earlier years were available, but such as they were proved useless for the purpose in view. In 1888 no report seems to have been made, which is much to be regretted, since an accident occurred during this year, in a mine at Frontenac, causing the loss of 44 lives. In 1892 no report was made by the State inspector, and hence this year is also omitted from the preceding table.

It having previously been shown that the average mortality from fatal accidents in coal-mining operations in Kansas was 1.62 per 1,000 for the eight years 1889–97 (excepting 1892), the rate is therefore 0.50 below the average mortality for the bituminous coal regions of the country at large. This very material difference, however, is more apparent than real, since an inclusion of the exceptionally heavy mortality for 1888 would have considerably increased the average for the decade 1887–96. The returns for single years have been subject to considerable fluctuations, and it is hardly possible to judge whether there has been a definite tendency toward a lowering of the fatality rate during recent years. Considering the eight years under observation as two periods of four years each, it appears that while the mortality during the first period was 1.81 per 1,000, the rate was reduced to 1.48 per 1,000 during the last, a decrease of 0.33 per 1,000.

Kentucky.—The annual product in 1886 was 1,400,000 short tons, increased to 3,128,818 short tons in 1896.

For the table which follows I am in part indebted to G. W. Stone, the State Inspector of Mines, who has been kind enough to furnish me with returns for years for which the annual reports are no longer obtainable.

FATAL ACCIDENTS IN COAL MINING IN KENTUCKY.

Year.	Persons Employed.	Lives Lost.	Mortality per 1,000.	Product per Employee.	Product per Life Lost.
1887	4,903	8	1.63	394	241,648
1888	6,186	14	2.26	379	167,290
1889	6,153	13	2.11	359	169,647
1890	7,314	11	1.50	340	225,740
1891	6,422	16	2.49	454	182,254
1892	7,668	8	1.04	394	377,506
1893	8,539	12	1.41	387	275,188
1894	8,032	10	1.25	369	296,720
1895	7,865	8	1.02	408	400,971
1896	7,550	6	0.79	422	530,580
1897	7,740	12	1.55	....	....

In the first table of the series the average annual mortality from accidents in coal mining in Kentucky was stated at 1.50 per 1,000, the State ranking lowest as regards the liability to casualties in American coal mines. In contrast to an average mortality rate of 2.12 per 1,000 for the country at large, the returns for this State show a mortality of 0.62 per 1,000 below the general average. The table before us shows that this low fatality rate has been fairly constant, and during only three out of the 11 years forming the period 1887–97 has the rate been above 2.00 per 1,000. The lowest mortality on record is shown to have been experienced in 1896 when the loss of life was only 0.79 per 1,000, while the highest mortality on record occurred in 1891, when a mortality rate of 2.49 per 1,000 was reached.

Considering the 11 years as two groups, the first of six and the second of five years, it appears that the mortality during the first period was 1.81 per 1,000 against 1.21 per 1,000 during the last five years. There has, therefore, been a gratifying decrease in the already low mortality from fatal accidents in the coal-mining operations of this State, as is shown in a graphic manner in the diagram on the next page.

Considering the local accident liability by inspection districts, it is shown in the following table for the five years 1892–96 that the western coal field differs very materially in this respect from the two inspection districts in the eastern:

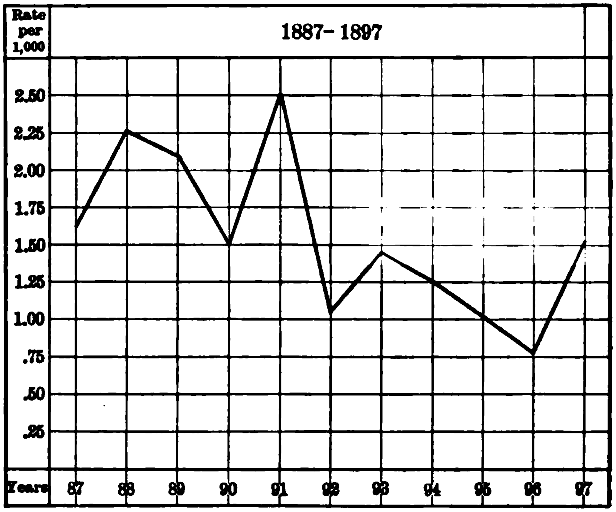

DIAGRAM SHOWING THE FLUCTUATIONS IN THE FATALITY RATES IN COAL MINING IN KENTUCKY.

FATAL ACCIDENTS IN COAL MINING IN KENTUCKY BY INSPECTION DISTRICTS.

For	Total Employees, 1892–96.	Total Number Killed, 1892–96.	Average Mortality per 1,000.
Western district.......	18,493	18	0.70
Southeastern district..	15,018	22	1.47
Northeastern district..	6,143	9	1.47
State................	39,654	44	1.11

The conclusion is warranted that while accidents in coal mining in Kentucky are of comparatively rare occurrence, they are most so in the western district.

Maryland.—The coal production, which in 1886 had reached 2,500,000 short tons increased to 3,627,425 in 1896. The State holds, therefore, high rank as a coal-producing section of our country, and it is much to be regretted that the returns in regard to the occurrence of fatal accidents in coal mining in Maryland should be limited to the short period 1890–97. I have not been able to obtain information for previous years, nor have I been able to ascertain whether returns as to casualties were published previous to 1890.

FATAL ACCIDENTS IN COAL MINING IN MARYLAND.

Year.	Persons Employed.	Lives Lost.	Mortality per 1,000.	Product per Employee.	Product per Life Lost.
1890............	3,842	8	2.08	874	419,727
1891............	3,891	6	1.54	982	636,707
1892............	3,959	6	1.52	767	506,047
1893............	4,071	5	1.23	817	665,550
1894............	4,147	7	1.69	748	443,012
1895............	3,921	9	2.30	887	386,611
1896............	3,800	6	1.58	1,069	677,119
1897............	4,276	5	1.17	....	....

The average mortality rate for this State has previously been stated at 1.63 per 1,000 or 0.49 below the average for the country at large. The highest mortality was experienced in 1895 when the rate reached 2.30 per 1,000, or 0.67 per 1,000 above the average of the State for the eight-year period. The most favorable rate occurred in 1897, when the mortality was reduced to 1.17, or 0.46 per 1,000 below the State average.

Considering the eight years as two periods of four years each, it appears from the table before us that the mortality from accidents in coal mining in Maryland was 1.59 per 1,000 during the first four years against a rate of 1.67 per 1,000 during the last. The slight increase shown to have taken place during the last four years is of little importance, and the State must be looked upon as one in which accidents in coal-mining operations are of comparatively rare occurrence.

Michigan.—The coal production of Michigan is unimportant, and for this reason it is probable that no statistics as regards the occurrence of fatal accidents in the few active coal mines of this State are published.

Missouri.—The coal product in 1886 was 1,800,000 short tons, while 2,420,147 were mined in 1896. The statistical returns as to the occurrence of fatal accidents in the mining operations of the State are limited to the eight-year period 1890–97. No returns for earlier years, it would seem, have been published with the possible exception of the two years 1888–89, for which the reports, however, could not be obtained by the writer.

FATAL ACCIDENTS IN COAL MINING IN MISSOURI.

Year.	Persons Employed.	Lives Lost.	Mortality per 1,000.	Product per Employee.	Product per Life Lost.
1890............	5,971	10	1.67	408	243,740
1891............	6,879	18	2.62	385	147,223
1892............	8,059	20	2.48	374	150,864
1893............	7,767	21	2.70	411	151,926
1894............	7,644	19	2.49	312	125,438
1895............	7,070	13	1.84	323	175,622
1896............	6,588	15	2.28	367	161,843
1897............	6,557	8	1.22	....	....

According to the first table of this series the average mortality from fatal accidents in the coal-mining operations of Missouri was 2.19 per 1,000, or 0.07 per 1,000 in excess of the general average rate for the bituminous coal regions of the country at large. The highest mortality occurred during the year 1893, when the rate was 2.70 per 1,000, while the lowest mortality was experienced during 1897, when the fatality rate was reduced to 1.22 per 1,000. The fluctuations in the mortality have, therefore, been considerable, and, as a rule, above the State average. If we consider the eight years under observation as two periods of four years each, it appears that the mortality during the first period was 2.41 per 1,000 against a rate of 1.97 during the last. There has, therefore, been a considerable decrease in the mortality during recent years, but the fluctuating character of the rates would hardly support the conclusion that this decrease can be looked upon as a permanent improvement.

Montana.—Montana is one of the few coal-producing States of importance for which I have found it impossible to obtain accurate statistical data in regard to the occurrence of fatal accidents in coal-mining operations. This is the more to be regretted since the returns for the neighboring State, Washington, indicate a very high local accident liability in coal mining in the far West.

Annual reports of the State Mine Inspector are published, but the information pertaining to accidents in coal mining is combined with similar information for accidents in metal mines, and hence no conclusions of value can be drawn from the information furnished. The annual product, which in 1886 was only 49,846 short tons, increased to 1,157,722 short tons in 1896. The number of men employed in coal mining, according to the "Seventeenth Annual Report of the U. S. Geological Survey," was 1,251 in 1890 and 2,184 in 1895. Hence the importance of accurate information as to the local liability to fatal accidents in coal-mining operations in this State, and the urgent need of a considerable improvement in the statistical reports of the State Mine Inspectors as at present published.

Nebraska.—The annual coal output is approximately from 1,000 to 2,000 short tons. No information as regards the occurrence of fatal accidents in the few mines operated in this State is available for the purpose of this inquiry.

New Mexico.—In 1886 the product was 271,000 short tons and 332,600 short tons in 1896. The statistical returns as regards the occurrence of fatal accidents in the mining operations in this Territory are limited to the three years 1895–97, and, as far as I have been able to find out, no reports of casualties have been made for years previous to 1895.

FATAL ACCIDENTS IN COAL MINING IN NEW MEXICO.

Year.	Persons Employed.	Lives Lost.	Mortality per 1,000.	Product per Employee.	Product per Life Lost.
1895.............	1,659	28	16.88	221	13,123
1896.............	1,488	7	4.87	433	88,947
1897.............	1,365	7	5.13	....	....

It was shown in the first table of this series that the average annual mortality was 9.42 per 1,000 for the three-year period 1895–97. This enormous mortality, which is far out of proportion to the general occurrence of fatal accidents in American coal-mining operations, was chiefly due to the exceptionally large number of deaths which occurred during 1895 when the rate was 16.88 per 1,000. But even during the two years 1896 and 1897 the rates have been more than double the average mortality of the bituminous coal regions of the country at large.

Out of the 28 deaths which were reported as having occurred in New Mexico during 1895 as the result of fatal accidents in coal-mining operations, 24 were the result of a single explosion, on February 7, in the county of Santa Fé. While there are no indications that such accidents would be likely to repeat themselves, the high rates which have prevailed during all of the three years would suggest that there are local dangers connected with mining operations in this section which are likely to produce in the future, as they have during the past three years, a death rate considerably above the normal mortality from fatal accidents in coal mining in the country at large.

Ohio.—The State of Ohio in 1896 was the third in order of coal production, with an output of 12,912,608 short tons, as compared with 9,447,436 tons produced in 1886. The State has probably the best inspection system in this country. The Bureau of Mine Inspection has been in operation 22 years, and for the statistics of fatal accidents which follow I am in part indebted to Robert M. Haseltine, the Chief Inspector of Ohio Mines. The table below will give the usual information for each of the years forming the period 1880–96, the returns for 1897 not being as yet available:

FATAL ACCIDENTS IN COAL MINING IN OHIO.

Year.	Persons Employed.	Lives Lost.	Mortality per 1,000.	Product per Employee.	Product per Life Lost.
1880	16.972	22	1.30	462	356,364
1881	(*a*) 19.939	29	1.45	462*a*	317,655
1882	(*a*) 22,909	25	1.09	462*a*	423,860
1883	(*a*) 21,636	26	1.20	426*a*	354,498
1884	20,101	26	1.29	426	329,528
1885	19,704	51	1.59	444	171,649
1886	20,487	43	2.10	462	219,708
1887	22,237	36	1.62	519	320,498
1888	21,801	29	1.33	561	421,868
1889	23,295	33	1.42	524	370,190
1890	22,192	42	1.89	595	314,870
1891	23,997	44	1.83	609	332,187
1892	26,972	42	1.56	541	347,617
1893	28,810	32	1.11	515	463,878
1894	31.493	45	1.43	378	264,504
1895	28,998	52	1.79	472	263,152
1896	28,446	41	1.44	454	314,942

(*a*) Estimated.

The average mortality from fatal accidents in coal-mining operations in Ohio during the decade 1887–96 has previously been stated to have been 1.53 per 1,000. The State ranks next to Kentucky as the one in which fatal accidents in coal mining are least frequent, and in comparison with the general average rate of the country it will be noted that while the Ohio rate was only 1.53, that of the whole country was 2.12 per 1,000. Hence the mortality in Ohio coal-mining operations has been 0.59 per 1,000 below the general average.

Considering the seventeen years covered by the table before us as two periods of nine and eight years respectively, it appears from the data before us that the mortality during the first period was 1.55 per 1,000, against a mortality of 1.55 per 1,000 during the last eight years. By a singular coincidence the two rates were identical for the two periods. There has, therefore, been no change in the mortality from mining accidents in Ohio during recent years. The fluctuations in the fatality curve are brought out graphically in the diagram which follows.

The diagram does not indicate either a definite downward tendency in the fatality curve or a clear and unmistakable influence of the inspection system in vogue in this State. The very considerable variations from year to year would rather indicate that the average mortality of 1.53 per 1,000 represents the normal risk of coal-mining operations in this State and that mining laws and regulations, changes in mining methods, and the extensive labor disputes and consequent strikes, have had little permanent influence on either the upward or downward tendency of the mortality from fatal accidents in the mining operations in Ohio.

The local accident liability in the several sections of the Ohio coal fields cannot be brought out with sufficient clearness on account of the fact that the detailed returns by inspection districts are not given in the Inspector's reports. The data are furnished by counties, which, in some instances, belong in part to one and in part to another district. I, however, have constructed the following table which will show for the principal coal-producing counties of Ohio the aggregate number of men employed, together with the aggregate number of fatal accidents and the corresponding death rates for the period 1891–96.

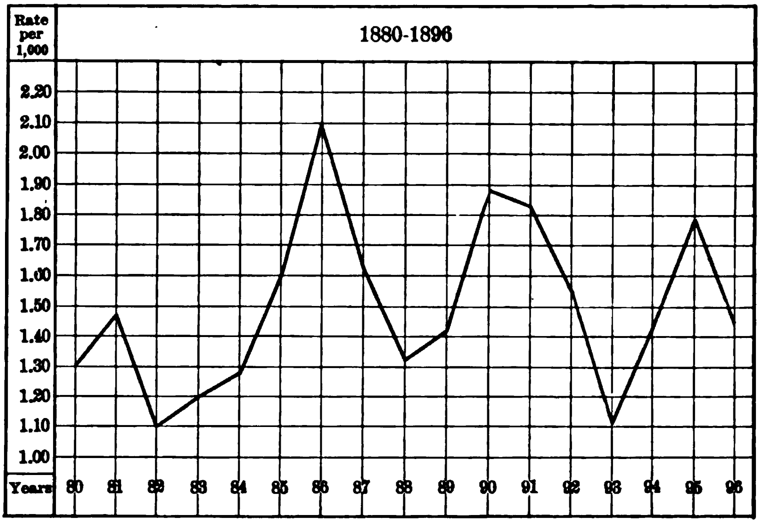

DIAGRAM SHOWING THE FLUCTUATIONS IN THE FATALITY RATE IN COAL MINING IN OHIO.

FATAL ACCIDENTS IN COAL MINING IN THE PRINCIPAL COAL PRODUCING COUNTIES OF OHIO, 1891–96.

Counties.	Aggregate No. of Persons Employed.	Aggregate No. of Lives Lost.	Mortality per 1,000.
Athens	18,279	19	1.04
Belmont	11,901	27	2.27
Columbiana	7,886	14	1.78
Guernsey	8,851	15	1.78
Hocking	14,299	11	0.77
Jackson	22,922	38	1.66
Jefferson	10,738	23	2.14
Perry	22,002	28	1.27
Stark	13,563	31	2.29
Tuscarawas	8,413	11	1.31
State (30 counties)	168,716	258	1.53

This table brings out very clearly the fact that in some of the counties the mortality is very materially in excess of the mortality in other counties, for instance, for Stark County; in the Tuscarawas district the mortality was 2.29 per 1,000 against a rate of only 0.77 in Hocking County, in the Hocking Valley district. In three instances, it will be observed, the rates for the several counties exceed the general average of 2.12 for the bituminous coal regions of the country at large, but the excess cannot be considered as of much consequence in view of the low rates which prevail in the remaining number of important coal-producing counties of this State.

The conclusion is therefore warranted that coal-mining accidents are comparatively infrequent in the State of Ohio, but that the higher rates which prevail in a few of the coal-producing counties are balanced by the low rates which prevail in other portions of the State; and further, that there are no indications of a determining character which would warrant the conclusion that the mortality from fatal accidents in this State is likely to be reduced in the near future below the general State average of 1.53 per 1,000.

Pennsylvania.—The State of Pennsylvania stands first in the order of coal-producing States of the United States. The statistical data as regards the occurrence of fatal accidents in the operation of anthracite coal mines cover the period 1870–97, and the table which follows will, aside from its general value, prove of special value on account of the length of the period covered.

FATAL ACCIDENTS IN ANTHRACITE COAL MINING IN PENNSYLVANIA.

Year.	Persons Employed.	Lives Lost.	Mortality per 1,000.	Product per Employee.	Product per Life Lost.
1870............	35,000	211	6.03	447	74,172
1871............	37,488	210	5.60	519	92,690
1872............	44,745	166	3.71	553	149,001
1873............	48,199	224	4.65	532	114,405
1874............	53,402	231	4.33	454	105,054
1875............	69,966	238	3.40	330	97,146
1876............	70,474	228	3.24	294	90,882
1877............	66,842	194	2.90	349	120,245
1878............	68,964	187	2.93	306	105,443
1879............	68,847	262	3.81	425	111,755
1880............	73,373	202	2.75	358	129,949
1881............	76,031	273	3.59	420	116,923
1882............	83,242	293	3.52	392	111,312
1883............	91,411	323	3.53	387	109,654
1884............	101,078	333	3.29	362	110,090
1885............	100.534	356	3.54	381	107,685
1886............	103,034	279	2.71	379	139,912
1887............	106,574	316	2.97	395	133,190
1888............	115,648	362	3.13	403	128,783
1889............	119.640	384	3.21	332	108,272
1890............	117,763	378	3.21	395	122,983
1891............	123,085	427	3.47	412	118,654
1892............	129,797	396	3.05	404	132,506
1893............	138,021	425	3.08	342	111,011
1894............	139,695	439	3.14	371	118,058
1895............	143,605	420	2.92	360	123,002
1896............	149,670	503	3.35	346	108,075
1897............	149,557	424	2.84	....	....

The returns for Pennsylvania as given in the above table differ slightly from the officially published statistics. Quite a number of errors are to be found in the summary tables published in the annual reports of the coal-mining inspectors of this State. Wherever such errors have come to my notice the corrected returns have been given in the above table.

In the first table of the series the average mortality rate for the anthracite coal region for the decade 1886–96 was given as 3.15 per 1,000, in marked contrast to an average of 1.88 per 1,000 for the bituminous coal regions of the State. It appears from the table before us that the mortality rates have fluctuated very considerably during the 27 years since the statistics have been collected, and it is shown that while the highest mortality reached 6.03 during the year 1870, the lowest rate on record occurred in 1886, when the mortality was reduced to 2.71 per 1,000, which, however, is still very considerably in excess of the general average mortality for the bituminous coal regions of the country at large. The very high rates during the first two years are probably affected by defective returns of the number of men employed, for in other States, Illinois and Colorado for instance, the highest mortality record occurred during the first year of the inspection service.

The fluctuations in the fatality rates during the period are more clearly brought out in the following diagram.

The gradual downward tendency in the fatality curve is quite manifest. The fall was considerable, and almost without exception during the period of 1870–80, after which year high rates prevailed during the period until 1885. A decrease occurred in 1886, which gradually increased again up to the year 1891, after which a gradual decrease was maintained to the present time with the exception of 1896, when an exceptionally fatal accident occurred at Pittston, which alone caused the loss of 58 lives. In the history of the State, only one accident, the Avondale disaster in 1869, has caused a larger loss (110) of life. Hence a material reduction has unquestionably taken place in the danger incident to coal mining in the anthracite coal regions of Pennsylvania. This conclusion is more fully supported by the following summary table, which will show by periods the average mortality from accidents in coal mining in this region:

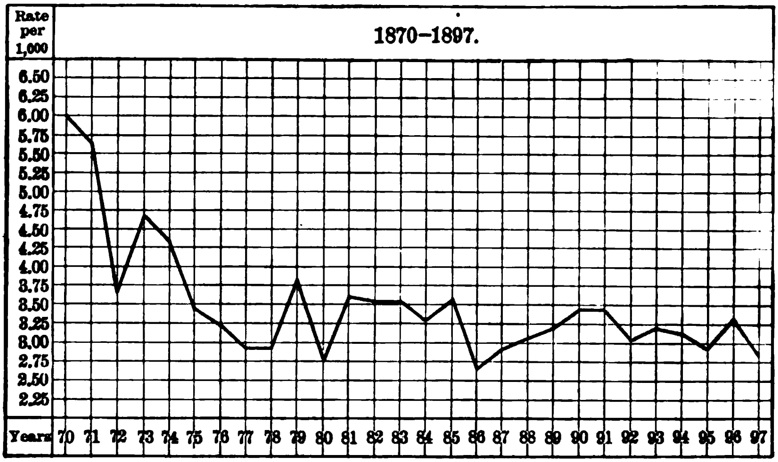

DIAGRAM SHOWING THE FLUCTUATIONS IN THE FATALITY RATE IN ANTHRACITE COAL MINING IN PENNSYLVANIA.

SUMMARY STATEMENT OF FATAL ACCIDENTS IN ANTHRACITE COAL MINING IN PENNSYLVANIA, 1870–1897.

Periods.	Aggregate No. of Persons Employed.	Aggregate No. of Lives Lost.	Mortality per 1,000.
1870-74	218,834	1,042	4.76
1875-79	340,093	1,109	3.26
1880-84	425,135	1,423	3.35
1885-89	545,440	1,697	3.11
1890-94	648,311	2,065	3.19
1895-97	442,852	1,346	3.04
Total	2,620,645	8,682	3.31

Considering the 28 years as two periods of 14 years each, it is shown by the data before us that the average mortality rate was 3.67 per 1,000 during the first, and 3.13 per 1,000 during the last period. The decrease in the accident liability has therefore been 0.54 per 1,000, and a very considerable saving in human life has been the consequent result. If the rate during the last 14 years had been the same as the average during the first, 937 more lives would have been lost in the anthracite coal-mining operations of this State.

The local accident liability in the several inspection districts is brought out in the following table. It has not been practicable, desirable as it would have been, to give these rates for a longer period, since the State was re-districted in 1892, and the present districts are not the same as those of similar numbers previous to 1893.

FATAL ACCIDENTS IN ANTHRACITE COAL MINING IN PENNSYLVANIA BY INSPECTION DISTRICTS.

(Rates per 1,000 Employed.)

	1893.	1894.	1895.	1896.	1897.	1893–1897.
First	3.7	2.9	2.4	2.9	2.9	3.0
Second	2.4	2.6	2.1	2.4	3.5	2.6
Third	4.1	3.0	3.9	6.1	3.5	4.1
Fourth	2.1	3.1	3.0	2.8	2.3	2.7
Fifth	3.3	3.2	2.8	2.4	1.9	2.7
Sixth	2.7	3.6	3.0	3.2	3.5	3.2
Seventh	4.0	4.1	3.0	3.8	2.3	3.4
Eight	2.5	1.9	3.1	3.5	2.8	2.8
State	3.1	3.1	2.9	3.4	2.8	3.1

The average mortality for the State as a whole is shown to have been 3.1 per 1,000 during the five-year period covered by the table before us. The highest average mortality was experienced in the third anthracite inspection district, which included the Pittston mine disaster of 1896, and to which, in part, is due the very high average for the period. The average rate of the second district was the lowest for any one of the eight inspection districts, and 1.5 per 1,000 below the average rate of the third. The period under observation is too short to permit of a detailed study of the returns by single years. It, however, is apparent that considerable fluctuations have occurred in the local district mortality during the five years for which the data are available.

If the districts are grouped into larger divisions in harmony with the geological formation of the anthracite coal area of the State, less striking variations from the general average appear to exist in the local liability to fatal accidents in the several coal regions of this State. Thus the first and second districts combined form what is known as the Lackawanna coal field, and while the average mortality in the former district was 2.95 and the average in the latter 2.62, the general average for this area was 2.79 per 1,000. The third and fourth districts form what is known as the Wyoming Valley region, and while the mortality in the former was 4.13 per 1,000 and only 2.67 per 1,000 in the latter, the average for the whole area was 3.27 per 1,000. The fifth inspection district forms the Lehigh coal field, and the average mortality for this district, as has been previously shown, was 2.73 per 1,000. The sixth, seventh, and eighth districts form the Schuylkill coal field, and while the mortality in the sixth was 3.20, in the seventh 3.44, and in the eighth district 2.78 per 1,000, the general average for the whole area was 3.19 per 1,000. The general differences are, therefore, but slight and unimportant, and the only noteworthy fact is that the local liability is highest in the third inspection district, which forms part of the Wyoming Valley region, while at the same time the rate in the adjoining district of the same coal field was only 2.67 per 1,000, which is next to being the lowest rate for any one of the eight inspection districts.

The table which follows will bring some of these points out with more emphasis and illustrate more clearly the fact that but slight and unimportant differences exist in the accident liability in the several coal-mining sections of the anthracite region of Pennsylvania.

FATAL ACCIDENTS IN ANTHRACITE COAL MINING IN PENNSYLVANIA DURING THE PERIOD 1893-1897 BY INSPECTION DISTRICTS AND COAL AREAS.

District.	Aggregate No. of Men Employed.	Aggregate No. of Lives Lost.	Average Mortality per 1,000.
First	83,596	247	2.95
Second	79,256	207	2.62
Third	85,660	354	4.13
Fourth	121,929	325	2.67
Total Wyoming-Lackawanna Region	370,441	1,133	3.06
Fifth	89,055	243	2.73
Sixth	103,826	332	3.20
Seventh	97,582	336	3.44
Eighth	59,644	166	2.78
Total Lehigh-Schuylkill Region	350,107	1,077	3.08
Total Anthracite Region	720,548	2,210	3.07

It is shown in this table that the average mortality for the Wyoming and Lackawanna coal regions combined was 3.06 per 1,000, while for the remainder of the anthracite area the fatality rate was 3.08 per 1,000. It would, therefore, appear that fatal accidents were slightly more frequent in the southern portion of the State than in the great coal fields of the north, but the differences are so slight, and the variations from the general district average so considerable, that no safe conclusion can be drawn from the data before us. The general conclusion, however, is warranted by the facts which have been brought together, that mining accidents are more fatal in the anthracite regions than in the bituminous coal field of Pennsylvania and of the country at large.

The further conclusion is warranted that the mortality from fatal accidents in anthracite coal mining has gradually diminished, and that it is highly probable that this rate will be still further reduced in the future. Finally, the conclusion would seem reasonable, even on the basis of limited facts, that fatal accidents are more common in the third anthracite district than in any other one of the eight inspection districts of the State, and that otherwise but slight differences exist between the accident liability in the coal fields of the Wyoming and Lackawanna basins in the northern, and the Lehigh and Schuylkill basins in the southern sections of the State.

The *bituminous* coal deposits of Pennsylvania form the northern extremity of the great Appalachian coal fields, and to a greater or less extent underlie nearly the whole western portion of the State. The statistical returns relating to the occurrence of fatal accidents in the mining operations in this portion of the Pennsylvania coal fields are, unfortunately, limited to the eleven-year period 1887–97, and, as far as I am able to find out, no data of this nature have been collected previous to 1887. The Inspector's reports for years previous to this year deal exclusively with the anthracite regions, and the tables which follow may, therefore, be accepted as representing all of the available information as to the occurrence of fatal accidents in the mining operations in the bituminous coal region of this State.

FATAL ACCIDENTS IN BITUMINOUS COAL MINING IN PENNSYLVANIA.

Year.	Persons Employed.	Lives Lost.	Mortality per 1,000.	Product per Employee.	Product per Life Lost.
1887	57,878	84	1.45	545	375,201
1888	61,531	90	1.46	549	375,519
1889	61,076	105	1.72	602	344,515
1890	66,944	146	2.18	632	289,741
1891	73,923	237	3.21	579	180,542
1892	78,789	133	1.69	591	350,200
1893	81,800	131	1.60	531	331,465
1894	86,177	124	1.44	486	337.689
1895	84,904	155	1.83	610	334,278
1896	83,796	179	2.14	600	280 858
1897	86,554	149	1.72	....	....

In the first table of the series the average mortality from fatal accidents in the Pennsylvania bituminous coal region was stated to have been 1.88 per 1,000 during the decade 1887–96. It was further shown in the same table that the general bituminous average for the country at large during the same period was 2.12 per 1,000, or 0.24 per 1,000 in excess of the bituminous average for the State of Pennsylvania. It is, therefore, clear that the local mortality from fatal accidents in coal-mining operations in the bituminous coal regions of Pennsylvania is considerably below the average rate, 2.27, prevailing in the remaining portion of the bituminous coal field of the United States. However, in comparison with the two most important coal-producing States, it appears that both Ohio and Illinois have lower rates than Pennsylvania.

Considering now the rates for individual years it is shown by the table before us that the variations in the fatality rates have, at times, been very considerable, so much so, that while the mortality in 1891 was 3.21 per 1,000, or 0.06 in excess of the average for the anthracite region, the mortality in 1894 was only 1.44 per 1,000, or lower than the lowest average for any one of the bituminous coal-producing States of this country. The fluctuations in the fatality curve are illustrated in the diagram on the next page.

Considering the 11 years 1887–97 as two periods of six and five years respectively, it appears that the mortality during the first six years was 1.99 per 1,000 against a mortality of 1.74 per 1,000 during the last five years. There has, therefore, been but a slight though not unimportant decrease in the average mortality in the bituminous coal-mining operations of Pennsylvania during recent years.

The local liability to fatal accidents in coal mining in the various districts into which the State is divided are brought out in the tables which follow. For want of space only the rates per 1,000 are given, and on account of a change in the district boundaries in 1892 the table is limited to the five-year period 1893–97.

FATAL ACCIDENTS IN BITUMINOUS COAL MINING IN PENNSYLVANIA BY INSPECTION DISTRICTS.

(Rates per 1,000 Employed.)

Inspection District.	1893.	1894.	1895.	1896.	1897.	1893-1897.
First	2.5	2.2	2.3	4.0	2.1	2.6
Second	1.3	1.5	2.7	2.4	1.7	1.9
Third	0.5	1.3	1.1	0.5	1.6	1.0
Fourth	0.6	1.2	1.6	2.9	0.8	1.4
Fifth	1.8	1.7	1.6	2.4	2.9	2.1
Sixth	1.9	1.9	1.1	1.4	0.9	1.4
Seventh	2.2	0.9	1.8	2.1	2.2	1.9
Eighth	2.1	1.6	1.6	0.8	1.1	1.5
Ninth	1.7	1.2	2.8	2.3	2.2	1.9
Tenth	0.7	0.4	1.0	0.7	1.3	0.8
State	1.6	1.4	1.8	2.1	1.7	1.7

It is shown in this table that while the average mortality for the State at large was 1.7 per 1,000 during the five-year period, the rates for the several districts differed very materially from each other in their relative position to the State average. The highest mortality of 2.6 per 1,000 occurred in the first bituminous inspection district, which is formed of the counties of Allegheny, Fayette, Greene, Washington, and Westmoreland, in the southwestern corner of the State, while the lowest mortality of 0.8 per 1,000 occurred in the tenth inspection district, which is formed partly of the counties of Blair, Bedford, Fulton, and Huntingdon, and of parts of the counties of Cambria, Clearfield, Indiana, and Centre.

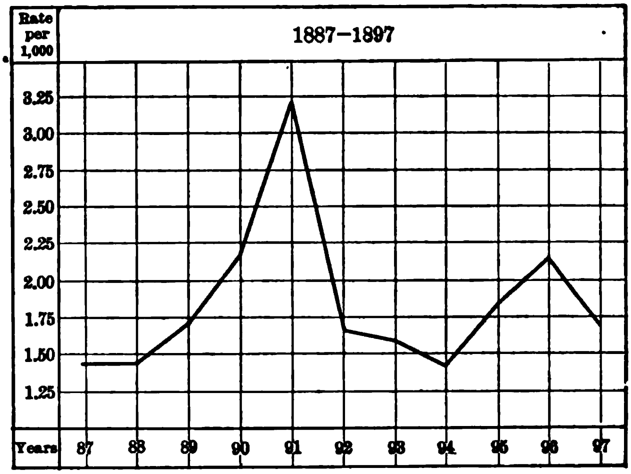

DIAGRAM SHOWING THE FLUCTUATIONS IN THE FATALITY RATES IN BITUMINOUS COAL MINING IN PENNSYLVANIA.

The highest mortality in any one district during any one of the five years occurred in the first inspection district in 1896 when the loss of life reached a rate of 4.0 per 1,000 of men employed in bituminous coal mining in this district. Although the rate was much in excess of the rates prevailing during the remaining four years, it does not indicate an exceptional variation, since the rates in general were all above the average bituminous rates for the State and the country at large. Nor was the excessive mortality due to any one exceptionally fatal accident, but rather to an increased number of isolated cases.

Very low rates prevailed in the third inspection district, which is formed of parts or the whole of the counties of Armstrong, Butler, Clarion, Indiana, Jefferson, Lawrence, Mercer, Westmoreland, and Beaver. The lowest rate occurred during the year 1893 when the mortality was reduced to only 0.49 per 1,000, and almost the same rate prevailed in 1896 when the mortality was only 0.50 per 1,000 of men employed in the mining of bituminous coal in this district. Nor do these low averages seem to have been exceptional, since the rates for the remaining three years were all very much below the general bituminous average mortality of the State.

Another district in which accidents have been comparatively infrequent is the tenth, in which during three years the rates were less than *one* per 1,000. It is, therefore, quite clear from the table before us that the first, second, fifth, seventh, and ninth districts must be looked upon as sections of the Pennsylvania bituminous coal field in which accidents are likely to be of more frequent occurrence than in the third, fourth, sixth, eighth, and tenth, in which such accidents are of comparative rarity.

Having dealt in detail with the general statistics of fatal accidents in mining operations in the anthracite and bituminous coal regions of Pennsylvania it may not be out of place to bring together in one table the comparative mortality rates of the several districts of the two coal areas of this State, so arranged that it will be possible at a glance to tell the relative position of any one of the eight anthracite or ten bituminous districts of the State as regards the local liability to fatal accidents in coal-mining operations.

COMPARATIVE MORTALITY FROM FATAL ACCIDENTS IN COAL MINING IN THE SEVERAL ANTHRACITE AND BITUMINIOUS INSPECTION DISTRICTS OF PENNSYLVANIA, 1893-1897.

District.	Persons Employed.	Lives Lost.	Rate per 1,000.
Anthracite—			
Third	85,660	354	4.13
Seventh	97,582	336	3.44
Sixth	103,826	332	3.20
First	83,598	247	2.95
Eighth	59,644	166	2.78
Fifth	89,055	243	2.73
Fourth	121,982	325	2.67
Second	79,256	207	2.62
Bituminous—			
First	54,017	141	2.61
Fifth	38,845	81	2.09
Ninth	43,378	84	1.94
Second	58,448	111	1.90
Seventh	49,577	92	1.86
Eight	39,134	59	1.51
Fourth	44,346	64	1.44
Sixth	37,854	53	1.39
Third	31,222	32	1.02
Tenth	26,924	22	0.82

This table will prove useful for a variety of purposes; it brings out clearly the fact that without exception the average rates in the anthracite district have been above the rates of the bituminous districts of the Pennsylvania mining regions, and the diagram which follows will merely illustrate this very important fact in a graphic manner.

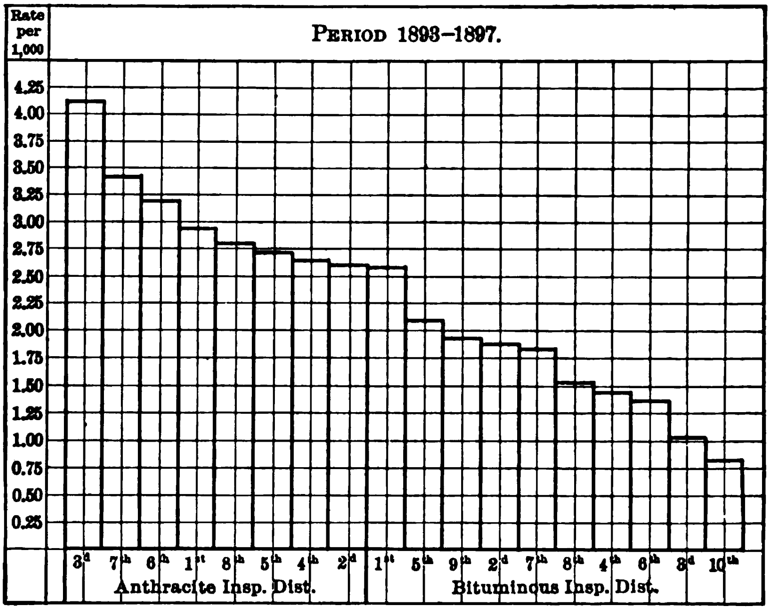

Diagram showing the comparative fatal accident liability in the different inspection Districts of the Pennsylvania Coal Fields.

This graphic illustration brings out the important fact that while the extreme limits of accident liability are between 4.13 and 0.82 per 1,000, the intermediate rates are such that the gap is filled by almost imperceptible degrees.

Whether it will be possible for improved methods in mining, for increased efficiency and care on the part of the miner himself, or for a more rigid and intelligent inspection system to reduce gradually the high mortality rates now experienced in most of the anthracite districts to the average rate as it prevails in the bituminous coal-mining region, it will not be possible to say until a further investigation into the causes of fatal accidents in coal mining has clearly established the fact as to how far each of these factors is responsible for their occurrence.

Rhode Island.—According to Prof. Shaler the Rhode Island coal fields about Narragansett Bay contain a large and essentially unexplored coal basin which gives promise of great value. The basin contains several coal beds of workable thickness underlying a large area. The coal is exceedingly hard anthracite, but is mined in very small quantities. No information as to the occurrence of casualties in the mining operations of this State are available, and no statistics of men employed have been published.

Tennessee.—The Tennessee coal field is a prolongation southward of the eastern Kentucky field, and the workable veins range from 2 to 7 ft. in thickness.

It is much to be regretted that our information as regards the occurrence of fatal accidents in the coal-mining operations of this State are of a limited and fragmentary character, and especially because the State represents certain phases of mining, such as the convict lease system, and the employment of negroes, which would make a detailed and extensive knowledge of the facts especially valuable.

In view of these facts it is with some reluctance that I make use of the following table, which has been compiled from the best available sources, and which every effort has failed to make more complete:

FATAL ACCIDENTS IN COAL MINING IN TENNESSEE.

Years.	Persons Employed.	Lives Lost.	Mortality per 1,000.	Product per Employee.	Product per Life Lost.
1893............	4,976	11	2.21	473	168,857
1894............	5,542	14	2.53	467	184,976
1895............	5,120	40	7.81	458	57,998

In the first table of the series the average fatality rate for Tennessee was stated to have been 4.16 for the three years to which the table before us is limited. It is here shown that the annual rate has varied from 2.21 per 1,000 in 1893 to 7.81 per 1,000 in 1895. In 1896 the number of fatal accidents was 27, or at the rate of 4.61 per 1,000 persons employed. The excessive mortality in 1895 was due to an exceptionally fatal explosion, which occurred at Dayton, Tenn., and which caused the loss of 28 lives. No detailed information as regards the occurrence of fatal accidents among the convict and negro laborers in the coal mines of this State seems ever to have been brought together, and hence it is not possible, at the present time, to state how far either of these factors may be responsible, if at all, for the excessive mortality in coal-mining operations in Tennessee. The facts which have been collected by the writer would, however, indicate that the State must be looked upon as one in which fatal accidents in coal mining are more likely to occur than in any other section of the Appalachian coal fields.

Texas.—The principal body of bituminous coal in Texas lies in the north-central portion of the State, extending southwest from the Red River in Montague County to the Colorado River. No statistical information as regards the occurrence of fatal accidents in the coal mines of this State seem ever to have been published, and no reference to the subject is made in the several reports of the State Bureau of Agriculture and Statistics.

Utah.—The coal production of Utah is largely confined to the two counties of Emery and Summit. The statistical returns as to the occurrence of fatal accidents in the coal-mining operations in this State are limited to the three years 1893–95, during which reports were made by the Territorial Inspector of Mines, but since the admission of Utah to statehood no consecutive reports appear to have been made. The table which follows is, therefore, limited in value, more so in view of the small number of men employed in the coal-mining industry. The statistics as to the number of persons employed have been taken from the "Seventeenth Annual Report of the United Geological Survey," the information not being given in the State Inspector's reports.

FATAL ACCIDENTS IN COAL MINING IN UTAH.

Year.	Persons Employed.	Lives Lost.	Mortality per 1,000.	Product per Employee.	Product per Life Lost.
1893............	576	2	3.47	732	210,700
1894............	671	1	1.49	676	458,601
1895............	670	1	1.49	792	530,713
1893-95.........	1,917	4	2.09	733	351,429

According to this table the average mortality during the three years was 2.09 per 1,000, or slightly below the general average of 2.12 per 1,000 for the bituminous coal field of the country at large. The rate was highest during the year 1893, but on account of the small number of cases on which the rates are calculated no definite conclusion as to the local liability to fatal accidents in coal mining in this section can be arrived at.

Virginia and West Virginia.—It is much to be regretted that no statistical information is available as to the occurrence of fatal accidents in coal mining in the State of Virginia, while for West Virginia the returns are limited to a period of only six years. The absence of data in regard to fatal accidents in Virginia coal mines is so much more to be regretted since we have record of a number of exceptionally fatal accidents in the mines in the eastern portion of this State during the slavery period. According to Taylor,* an explosion of fire damp occurred in March, 1839, in which 53 lives, mostly colored, were lost out of a total number of 56 persons who were in the mine at the time. The shaft of the mine, it is stated, was 700 ft. deep. In June, 1844, an explosion occurred in which 11 out of 12 persons were killed, of whom 8 were negroes. In May, 1854, an explosion occurred at the Chesterfield coal pits, 14 miles from Richmond. Twenty men were in the pit at the time, all of whom, but one, were instantly killed. The mine in which the accident occurred was more than 600 ft. deep, and it is stated that several explosions had previously occurred in the same pit.

For West Virginia my information is limited to the period of 1891-96, and the two tables which follow contain all of the information which I have been able to obtain for this State.

FATAL ACCIDENTS IN COAL MINING IN WEST VIRGINIA.

Year.	Persons Employed.	Lives Lost.	Mortality per 1,000.	Product per Employee.	Product per Life Lost.
1891............	11,397	36	3.16	716	226,583
1892............	13,023	36	2.76	669	241,969
1893............	17,129	72	4.20	574	136,639
1894............	19,771	59	2.98	534	178,962
1895............	20,889	83	3.97	591	148,657
1896............	24,227	65	2.68	517	192,944

It will be observed on reference to the first table of the series that the average

---

**Statistics of Coal*, 2d ed., p. 293.

mortality during the six years under observation was 3.30 per 1,000, in contrast to an average of 2.12 per 1,000 for the bituminous coal fields of the country at large. On examination of the returns for the different years, it will be noted that the mortality was highest in 1893, when the rate reached 4.20 per 1,000, while the lowest rate on record occurred during 1896, when the mortality was reduced to 2.68 per 1,000, which is still considerably in excess of the normal average for the country at large, and very materially in excess of the rates for the other three important bituminous coal-producing States of the Union.

Considering the six years as two periods of three years each, it appears from the data before us that the mortality has decreased from 3.47 per 1,000 during the first three years to 3.19 per 1,000 during the last. The period under observation is, however, too short to warrant the conclusion that this decrease is likely to be a permanent one.

The general conclusion seems warranted that the State must be looked upon as one in which fatal accidents in coal-mining operations are likely to occur in greater frequency than in the bituminous coal regions of the country at large.

Washington.—The statistical returns in regard to the occurrence of fatal accidents in coal-mining operations in this State are unfortunately limited to the five-year period 1892–96, a limitation so much more to be regretted since the obtainable information indicates an exceptionally heavy mortality from fatal accidents in coal mining in this section of the country.

FATAL ACCIDENTS IN COAL MINING IN WASHINGTON.

Year.	Persons Employed.	Lives Lost.	Mortality per 1,000.	Product per Employee.	Product per Life Lost.
1892	2,960	55	18.58	336	18,182
1893	2,828	9	3.18	428	134,617
1894	3,380	50	14.79	350	23,673
1895	2,828	35	12.38	419	33,846
1896	2,683	8	2.98	522	175,044

In the first table of the series the average mortality of Washington for the five-year period for which the returns are available is stated to have been 10.70 per 1,000, or the highest mortality on record for any one of the bituminous or anthracite coal-producing States of the Union. The table before us discloses the fact that this average rate, high as it is, has at times been very much greater, so much so that in 1893 the rate reached 18.58 per 1,000.

I know of no coal area, in this or any other country, in which fatal accidents in coal-mining operations have been of such an exceptionally fatal nature, and of such repeated occurrence. The very high rate of 1892 was caused by an explosion which occurred at Roslyn, and in which 45 persons lost their lives. In 1894 another exceptionally fatal accident occurred in the Franklin mine, in which 37 persons lost their lives, while finally, in 1896, an explosion occurred in the Blue Canyon mine, in which 23 persons were killed. Exceptionally fatal accidents have, therefore, been frequent, and the State must be considered as the one in which the loss of life in coal-mining operations have been proportionately greater than in any other portion of the country.

The local liability to fatal accidents in coal mining in the several inspection districts of the State is brought out in the next table.

FATAL ACCIDENTS IN COAL MINING IN WASHINGTON ACCORDING TO INSPECTION DISTRICTS.

Year.	First District.			Second District.		
	Men Employed.	Lives Lost.	Rate per 1,000.	Men Employed.	Lives Lost.	Rate per 1,000.
1892............	2,138	53	24.8	822	2	2.4
1893............	2,049	9	4.4	779	....	....
1894............	2,510	45	17.9	870	5	5.8
1895............	2,047	30	14.7	781	5	6.4
1896............	1,851	6	3.2	832	2	2.4
1892-96.........	10,595	143	13.5	4,084	14	3.4

It appears from this table that while fatal accidents have been most frequent in the first district, fatal accidents in the second district have also been sufficiently common to maintain an average rate of 3.4 per 1,000. All of the exceptionally fatal accidents to which detailed reference has been made occurred, however, in the first district, which must be considered the most dangerous mining district in this country.

Wyoming.—There is no official information of a satisfactory character in regard to the occurrence of fatal accidents in the coal mines of this State, and the only reference to the subject occurs in the message of Governor Richards to the fourth State legislature, in which it is stated that on March 20, 1895, an explosion occurred at Red Canyon, Wyo., in which 61 men lost their lives. In the absence of official statistics for a period of years it is, of course, not possible to definitely state whether fatal accidents are likely to occur with exceptional frequency in this region.

Having now discussed in detail the occurrence of fatal accidents in coal mining in all of the coal-producing States of the United States, it will increase the permanent value of this investigation to add a few facts in reference to the coal fields of Nova Scotia and British Columbia, for which the necessary data are available.

Nova Scotia.—The annual product of coal in Nova Scotia during the year ending September 30, 1897, is stated to have been 2,320,000 tons, of which 1,321,653 tons were mined in the county of Cape Breton.

The general average mortality for the whole period of 32 years is shown to have been 3.47 per 1,000, while the average mortality for the decade 1887-96 was 3.60 per 1,000. If we consider the first 30 years as three periods of 10 years each, it appears from the data before us that the rate was 4.08 per 1,000 during 1866-75, 3.39 per 1,000 during the decade 1876-85, and 3.62 per 1,000 during the decade 1886-95, indicating a slight and not very important decrease in the accident liability in the coal mines of Nova Scotia during the past 30 years. The facts are more clearly presented in the following diagram.

This diagram is of special interest and of more than passing importance, illustrating as it does conditions such as are not met with in either the bituminous or anthracite coal-mining operations in this country. Three times during the 32 years under observation the mortality rate increased far above the general average, so much so, that in 1873 the rate increased to 16.74 per 1,000, in 1880 to 15.91 per 1,000, and finally in 1891 to 22.28 per 1,000. In the explosion of May 13, 1873, at the Drummond Colliery, 60 lives were lost. Seven years later, in 1880, an explosion occurred in the Ford Pit in which 44 lives were lost, and as the result of which the annual fatality rate increased to 15.91 per 1,000. In 1891 an explosion occurred on February 21, at the collieries of the Cumberland Railway and Coal Co. at Springhill which caused the death of 125 men and boys.

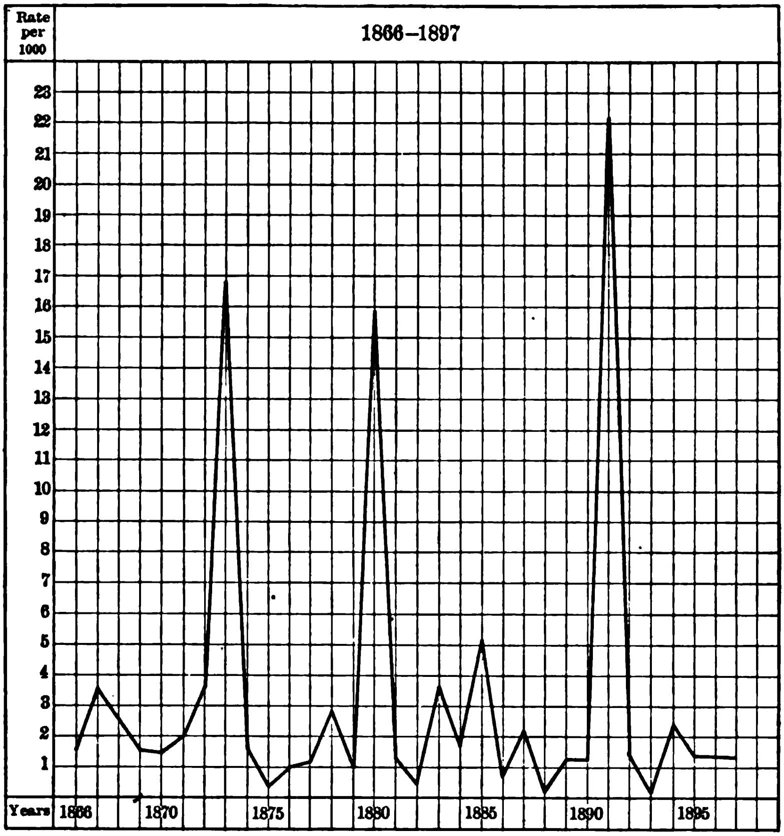

Diagram showing the fluctuations in the fatality rate in Coal Mining in Nova Scotia

The details of the explosion, which is the most fatal in the history of coal mining in North America, are reported in full in an appendix to the annual report of the Department of Mines for 1890.

The Nova Scotia coal field must therefore be looked upon as the one in which exceptionally fatal accidents are more likely to occur than in any other part of the coal area of the United States and Canada, and there are no facts which would warrant the conclusion that this condition is likely to be materially improved in the near future.

The statistical data as regards the occurrence of fatal accidents in this province are exceptionally extensive and complete, and the table which follows will give the information for the period 1866–97:

FATAL ACCIDENTS IN COAL MINING IN NOVA SCOTIA.

Year.	Persons Employed.	Lives Lost.	Mortality per 1,000.
1866	3,043	5	1.64
1867	2,984	11	3.69
1868	2,639	7	2.65
1869	2,458	4	1.63
1870	2.600	4	1.54
1871	2,469	5	2.03
1872	3,522	13	3.69
1873	4,362	73	16.74
1874	4,282	7	1.63
1875	3,777	2	0.53
1876	3,229	3	0.93
1877	3,180	4	1.26
1878	3,135	9	2.87
1879	3,034	3	0.99
1880	3,332	53	15.91
1881	3,567	5	1.40
1882	4,235	2	0.47
1883	4,635	17	3.67
1884	5,018	9	1.80
1885	4,446	23	5.17
1886	4,585	4	0.87
1887	4,367	10	2.29
1888	4,651	2	0.43
1889	5,167	7	1.35
1890	5,324	7	1.31
1891	5,746	128	22.28
1892	5,800	9	1.55
1893	5,890	2	0.34
1894	5,396	13	2.41
1895	5,793	9	1.55
1896	6,012	8	1.33
1897	5,175	7	1.35

British Columbia.—The coal product of British Columbia is stated to have been 846,235 tons in 1896. The mines which are in operation are located principally on Vancouver Island, near the city of Nanaimo. The statistical returns which I have been able to obtain are limited to the two years 1895–96, and the tables which follow contain all of the information annually published in the reports of the Minister of Mines:

FATAL ACCIDENTS IN COAL MINING IN BRITISH COLUMBIA.

Year.	Persons Employed.	Lives Lost.	Mortality per 1,000.
1895	2,924	10	3.42
1896	2,753	9	3.27
1895-96	5,677	19	3.35

According to this table the average mortality during the two years was 3.35 per 1,000, or considerably above the average for the bituminous coal regions of the United States, but below the mortality prevailing in Eastern Canada, in Washington, Colorado, and New Mexico. Since a considerable number of Chinese and Japanese are employed in the coal mines of this province, I have prepared the following table for the two years 1895–96, which will show the mortality from fatal accidents according to race:

FATAL ACCIDENTS IN COAL MINING IN BRITISH COLUMBIA ACCORDING TO RACE, 1895–96.

Race.	Persons Employed.	Lives Lost.	Mortality per 1,000.
White	4,463	14	3.14
Chinese	1,032	5	4.84
Japanese	182	....	....
Total	5,677	19	3.35

It is shown in this interesting statement that the Chinese were subject to a very much higher rate than the whites. While the mortality among the former reached 4.84 per 1,000, the mortality of the latter was 3.14 per 1,000. No fatal accidents occurred among the small number of Japanese employed in the coal mines of British Columbia during the two years under observation.

This survey of the occurrence of fatal accidents in the coal regions of North America would be incomplete without a few additional summary statements which will prove useful for a variety of purposes, and which will afford a convenient means of comparison of conditions in this country and other parts of the globe.

Before I deal with the returns for foreign countries it may not be out of place to consolidate the returns for this country and Canada in accordance with the principal coal-producing areas. This has been done in the following table, in which the several States have been combined in the manner that the coal field of the respective section is dealt with as a whole. I have, however, divided the Appalachian field into a northern and southern section, since the radically different conditions as to the employment of convict and colored labor make this division desirable, in fact imperative.

FATAL ACCIDENTS IN BITUMINOUS COAL MINING IN THE PRINCIPAL COAL FIELDS OF NORTH AMERICA, 1887–96. (*a*)

States.	Aggregate No. of Persons Employed.	Total No. of Lives Lost.	Mortality per 1,000.
Pennsylvania, Ohio, Maryland	1,026,966	1,828	1.78
West Kentucky, Indiana, Illinois	407,721	749	1.84
Missouri, Iowa, Kansas, Indian Territory	215,747	466	2.16
Tennessee, East Kentucky, Alabama, West Virginia	165,383	483	2.92
Nova Scotia	54,146	195	3.60
Colorado, New Mexico, Utah	69,949	346	4.95
Washington, British Columbia	20,356	176	8.65
Total North America	1,960,268	4,447	2.27

(*a*) For a few States the returns for 1897 are included.

It is shown in this summary statement that the average mortality for the whole North American bituminous coal field during the period 1887–96 was 2.27 per 1,000, in contrast to which the mortality in the anthracite coal field of Pennsylvania was 3.21 per 1,000. The rate was lowest for the northern portion of the Appalachian coal field and highest for the Washington-British Columbia field. The most favorable rates prevailed in the Eastern and Middle States, while Nova Scotia and our far Western and Southern States show the most unfavorable mortality rates during the decade under observation. Roughly speaking, the further west the coal mines are located the higher the mortality from fatal accidents; and this holds equally true of the extreme northern and southern coal areas, in which the mortality has been much greater than in the northern section of the Appalachian coal field.

Comparing now the returns for this country and Nova Scotia with the returns for foreign countries of greater or equal importance as coal-producing sections, it is shown in the following table that material and important differences exist in the frequency of fatal accidents in mining operations in the various portions of the globe.

FATAL ACCIDENTS IN COAL MINING IN THE PRINCIPAL COAL-PRODUCING COUNTRIES 1887–1896.

Countries.	Persons Employed.	Lives Lost.	Mortality per 1,000.
United Kingdom	6,422,491	10,482	1.63
United States, Bituminous	1,896,258	4,027	2.12
United States, Anthracite	1,283,448	4,049	3.15
Prussia	2,435,930	6,231	2.56
France	1.220,835	1,892	1.55
Austria, Bituminous	486,523	977	2.01
Austria, Brown	391.315	917	2.34
Belgium	1,139,105	1,915	1.68
New South Wales	96,798	246	2.54
Nova Scotia	54,146	195	3.60
Total	15,421,012	30,977	2.01

The coal-producing countries represented in this table produced in 1895, according to THE MINERAL INDUSTRY, 557,116,716 metric tons, or 96.3% of the world's total coal production, and the rates calculated for the decade 1887–96 may therefore be taken as representative of the coal-mining conditions of the world during this period. It will be observed that the average mortality for all of the countries was 2.01 per 1,000, against an average of 3.60 per 1,000 for Nova Scotia, 3.15 per 1,000 for the anthracite region of Pennsylvania, 2.12 for the bituminous coal fields of the United States, 2.56 per 1,000 for the bituminous coal field of Prussia, and 2.54 per 1,000 for the coal field of New South Wales. The lowest rates occurred in France with a rate of 1.55, the United Kingdom with a rate of 1.63, and Belgium with a rate of 1.68 per 1,000. The relative position of each country is more clearly brought out in the graphic diagram on the following page, which establishes the fact that, while the extreme limits of accident liability in coal-mining operations the world over are between 3.60 for the bituminous regions of Nova Scotia and 1.55 per 1,000 for the bituminous regions of France, our position as regards the occurrence of fatal accidents in the bituminous coal regions of this country is better than that of Prussia and New South Wales.

The mortality in the brown coal or lignite mines of Austria is also higher than the mortality rate for the bituminous coal field of this country, while the rates for the bituminous coal mines of Austria and the United States are practically the same. The local accident liability in coal mining in Belgium, the United Kingdom, and France is, however, very materially less than the local liability in the anthracite or bituminous coal fields of the United States. How far these rates have been subject to fluctuations during the decade to which the period under observation is limited is shown in the table below. The returns for Austria, as given in this and the preceding table, are for the decade 1886–95, the statistics for 1896 not having as yet been published.

ANNUAL AND AVERAGE MORTALITY FROM FATAL ACCIDENTS IN COAL MINING IN THE PRINCIPAL COAL PRODUCING COUNTRIES. (*a*)

Countries.	Average rate 1887–1896.	1887.	1888.	1889.	1890.	1891.	1892.	1893.	1894.	1895.	1896.
United Kingdom	1.63	1.9	1.7	1.9	1.9	1.5	1.5	1.6	1.6	1.5	1.5
United States, Bituminous	2.12	1.6	1.8	1.8	1.9	2.6	2.2	2.1	2.0	2.4	2.4
United States, Anthracite	3.15	3.0	3.1	3.2	3.2	3.5	3.1	3.1	3.1	2.9	3.4
Prussia	2.56	2.7	2.7	2.6	2.6	2.9	2.2	2.6	2.2	2.5	2.6
France	1.55	1.7	1.8	3.0	2.6	1.7	1.0	0.9	0.9	1.2	1.3
Austria, Bituminous (*b*)	2.01	1.3	1.5	1.8	1.9	1.8	2.5	1.2	1.1	5.1	2.0
Austria, Brown	2.34	2.0	2.0	2.1	2.2	2.7	2.3	2.4	3.7	2.1	1.8
Belgium	1.68	2.8	1.8	1.4	1.6	1.4	2.8	1.1	1.6	1.3	1.4
New South Wales	2.54	11.8	1.6	4.0	1.2	1.9	0.8	1.3	0.8	1.1	2.6
Nova Scotia	3.60	2.3	0.4	1.4	1.3	22.3	1.6	0.3	2.4	1.6	1.3

(*a*) Rates per 1,000 of persons employed. (*b*) For Austria the rates are for 1886–1895.

It will be observed at a glance that the local accident liability in coal-mining operations in the various countries has been subject to very considerable and important fluctuations, and on examination it will be found that the differences between the highest and lowest rates have been greatest in Nova Scotia, New South Wales, Austria (bituminous), and France, and least in the United Kingdom, United States (anthracite), and Prussia. The following table will bring this fact out in a more intelligible manner:

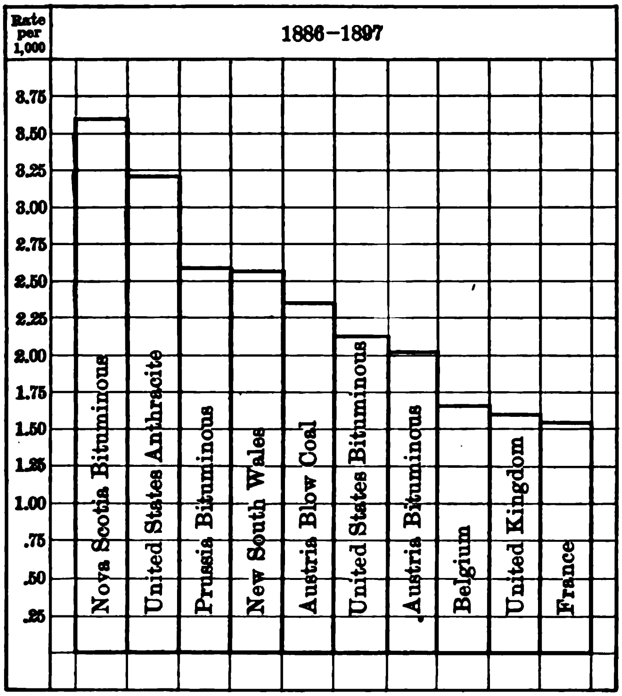

DIAGRAM SHOWING THE COMPARATIVE ACCIDENT LIABILITY IN COAL MINING IN THE PRINCIPAL COAL PRODUCING COUNTRIES OF THE WORLD.

HIGHEST AND LOWEST MORTALITY RATES IN COAL MINING IN THE PRINCIPAL COAL-PRODUCING COUNTRIES, 1887-96.

Countries.	Mortality per 1,000.		Difference per 1,000.
	Highest.	Lowest.	
United Kingdom	1.9	1.5	0.4
United States, Bituminous	2.6	1.6	1.0
United States, Anthracite	3.5	2.9	0.6
Prussia	2.9	2.2	0.7
France	3.0	0.9	2.1
Austria, Bituminous	5.1	1.1	4.0
Austria, Brown	3.7	1.8	1.9
Belgium	2.8	1.1	1.7
New South Wales	11.8	0.8	11.0
Nova Scotia	22.3	0.3	22.0

It is shown in this table that the highest and lowest rates on record occurred in Nova Scotia and New South Wales. The range, as has been stated, was greatest in Nova Scotia, and least in the United Kingdom.

If we consider the ten years 1887-96 as two periods of five years each, it will be possible to ascertain whether there are definite and uniform tendencies toward a diminishing accident liability in the coal-mining operations of the principal coal-producing countries for which the returns are available.

COMPARATIVE INCREASE OR DECREASE IN THE OCCURRENCE OF FATAL ACCIDENTS IN COAL MINING IN THE PRINCIPAL COAL-PRODUCING COUNTRIES.

Countries.	Periods.		Mortality per 1,000.
	1887-97.	1892-96.	
United Kingdom	1.76	1.52	Decrease 0.24
United States, Bituminous	2.00	2.20	Increase 0.20
United States, Anthracite	3.20	3.11	Decrease 0.09
Prussia	2.71	2.43	Decrease 0.28
France	2.15	1.04	Decrease 1.11
Austria, Bituminous	1.55	2.40	Increase 0.85
Austria, Brown	2.22	2.44	Increase 0.22
Belgium	1.76	1.61	Decrease 0.15
New South Wales	3.77	1.29	Decrease 1.48
Nova Scotia	6.10	1.42	Decrease 4.68

For the United Kingdom the table shows a decrease in the accident liability of 0.24 per 1,000 during the last five years compared with the first. How important this apparently small decrease is in its bearing upon the saving in human life is made clear by the statement that had the rate during 1892-96 been the same as during 1887-91 about 828 more lives would have been lost than was actually the case.

For the bituminous coal regions of the United States an increase of 0.20 per 1,000 is shown to have taken place during the past five years. In view of the fact that the returns for the first part of the period were of a rather unsatisfactory and incomplete character, the increase shown to have taken place is probably more apparent than real.

For the anthracite regions of the United States a decrease of 0.09 is shown to have occurred during the past five years which, it is hardly necessary to say, has been of little importance as a means of diminishing the actual loss of life in this region of the American coal field.

In Prussia the mortality decreased 0.28 per 1,000 during the last half of the decade. Had the rate during 1892-96 been the same as the prevailing mortality rate of 1887-92, the actual loss of life would have been 3,644 instead of 3,272.

A very material decrease in the mortality is shown to have taken place in France during the past five years, a verification of the saying that "they do such things better in France." Had the mortality during the last half of the decade been the same during the first, 733 more lives would have been lost in the operations of bituminous mines in that country.

In the bituminous coal mines of Austria a very material increase in the mortality occurred during the last five years of the period, and as a result there has been a considerable increase in the actual loss of life. Had the rate been the same during the last half of the decade 123 less lives would have been lost in the bituminous mines of this country. In the brown coal mines of Austria the mortality from fatal accidents in mining increased by 0.22 per 1,000. While this increase was less than the increase observed to have taken place in the bituminous coal mines in this country, the greater loss of life has been considerable. Had the rate during 1891-95 been the same as during the preceding five years 49 less lives would have been lost in the mining operations of this branch of the coal-mining industry of Austria.

In Belgium a decrease of 0.12 per 1,000 occurred in the mortality during the last five years of the decade in comparison with the first, and as a consequence 88 less lives were lost than would have been had the mortality during 1892-96 been the same as during the preceding five years.

The colony of New South Wales shows a very material reduction in the mortality rate, which has diminished the actual loss of life by 119 during the last five years in comparison with the first half of the decade.

For Nova Scotia a proportionately considerable decrease in the mortality is shown to have taken place during 1892-96 in comparison with 1887-91. Had the mortality during the last half of the period been the same as during the first half 135 more lives would have been lost than was actually the case.

While there has, therefore, been a considerable decrease in the accident liability in coal-mining operations in some of the principal coal-producing countries, in others the mortality has more or less increased. For this country it may be said, generally speaking, that the last five years have not brought about a very decided decrease in the accident liability in American coal mines.

How far the occurrence of fatal accidents in coal mines is to be attributed to local conditions inherent in the coal formations, to race, nationality or condition of servitude, to a more or less efficient system of State inspection, to a more or less rigid enforcement of the local liability laws, to improved methods in mining operations, or to any of the many other factors connected with coal mining in this country, cannot be stated at the present time.

An investigation covering most of the points referred to, as well as a further investigation into the effect of the coal miner's occupation on his health and longevity, is under way but will require considerable time for its completion. I have confined myself in this investigation to one aspect of the general question, and trust that the data brought together will prove of value to those who for financial or other reasons are interested in the occurrence and frequency of fatal accidents in coal mining in this country.

THE MINING STOCK EXCHANGES IN 1897.

In the following pages we have summarized the fluctuations and transactions in the mining stocks traded in on the various exchanges in the United States and London. In the United States there is very little speculation in mining stocks at the present time, outside of Boston, where the shares of copper companies in Michigan and Montana are dealt in extensively. In Denver and Colorado Springs there is considerable speculation in the shares of various Colorado mining companies, but the conditions under which most of these are put on the

FLUCTUATIONS OF MINING STOCKS AT BOSTON DURING 1897.

Name of Company.	Par Value.	January.		February.		March.		April.		May.		June.	
		H.	L.	H.	L.	H.	L.	H.	L.	H.	L.	H.	L.
Copper:													
Allouez *b*	$25	.85	......	1.00	.85	.85	......	......	......	1.00	......	1.00	.50
Anaconda *a*	25	......	......	......	......	33.00	29.00	......	......	......	......	......	......
Arnold *b*	25	3.50	1.50	3.75	2.88	3.75	2.75	2.75	2.00	3.88	2.25	3.50	3.00
Atlantic *b*	25	26.00	23.00	25.00	20.50	26.00	20.00	22.00	19.00	21.00	18.63	22.00	19.50
Boston & Montana *a*	25	111.25	94.75	119.75	106.50	129.00	119.50	126.38	113.50	124.75	109.25	135.00	122.75
Butte & Boson *a*	25	12.75	5.88	16.25	10.50	20.00	16.00	19.00	15.25	18.25	14.75	22.75	16.75
Calumet & Hecla *b*	25	360.00	306.00	375.00	355.00	390.00	280.00	370.00	360.00	375.00	350.00	395.00	373.00
Centennial *b*	25	6.50	2.50	7.00	5.75	9.25	6.25	8.00	4.50	7.50	5.63	8.00	5.00
Copper Falls *b*	25	......	......	......	......	5.00	......	......	......	......	......	......	......
Franklin *b*	25	14.00	11.00	13.00	10.88	11.50	10.50	11.00	10.00	13.88	10.00	16.25	14.00
Humboldt *b*	25	......	......	......	......	.86	......	......	......	......	......	.50	.36
Iroquois *b*	25	......	......	......	......	......	......	......	......	......	......	......	......
Kearsarge *b*	25	21.00	16.00	20.25	17.50	19.75	15.50	16.88	13.00	16.75	14.50	19.00	17.00
Old Dominion *c*	25	18.75	15.50	19.50	16.00	17.88	12.25	15.00	12.00	15.50	14.25	19.25	15.00
Osceola *b*	25	35.00	29.00	34.75	31.00	35.50	30.00	31.00	28.00	31.50	28.00	33.75	28.50
Quincy *b*	25	129.00	115.00	117.00	115.00	115.00	104.00	110.00	107.00	109.00	104.00	116.00	108.00
Quincy Scrip *b*	25	109.00	100.00	107.00	104.50	108.00	96.00	......	......	......	......	......	......
Tamarack *b*	25	125.00	119.00	121.00	116.00	123.00	118.00	120.00	113.00	123.50	112.00	127.00	118.00
Tamarack, Jr. *b*	25	19.00	15.00	18.50	16.25	18.25	16.50	17.13	14.00	17.00	14.00	22.00	15.50
Tecumseh *b*	25	3.25	3.00	3.62	2.75	3.00	2.75	......	......	2.25	......	2.25	1.50
Wolverine *b*	25	11.00	9.00	11.00	9.50	10.50	9.00	9.25	8.63	9.88	8.50	10.75	9.38
Gold:													
Boston & Cripple Creek *d*	1	.20	.10	.11	......	......	......	.12	.08	.15	......	.15	.08
Gold Coin *d*	1	4.00	3.00	3.75	3.50	......	......	5.50	4.75	5.00	4.00	5.00	4.25
Merced *e*	15	10.50	7.50	11.00	8.30	10.50	8.88	9.00	7.50	9.25	7.50	9.50	8.00
Pioneer *e*	10	6.00	4.88	6.00	4.75	6.25	4.25	6.00	2.50	6.00	2.88	6.00	2.75
Santa Ysabel *e*	5	14.50	11.00	14.75	12.50	14.00	12.00	12.00	......	13.00	11.00	14.50	12.50
Miscellaneous:													
Ætna *e*	5	......	......	......	......	3.63	......	3.50	......	4.00	......	4.00	......
Bonanza *i*	100	......	......	.50	......	.70	.48	.65	.55	......	......	.55	.50
Dominion Coal *f*	100	10.25	8.13	9.13	8.50	8.50	6.25	11.00	7.50	10.63	9.50	11.25	10.00
Dominion Coal *g*	100	85.00	84.00	83.50	82.00	85.00	77.00	84.00	79.00	86.00	81.00	90.00	84.00
Illinois Steel *j*	100	42.00	13.00	38.00	29.00	37.50	32.25	35.00	34.00	35.00	32.00	39.00	33.75
Lake Superior Iron *b*	25	20.50	......	20.50	......	......	......	......	......	......	......	......	......
Napa Con., Q. *e*	7	......	......	6.75	......	6.75	6.38	6.25	......	6.50	......	6.50	6.25
New Idria *e*	5	......	......	......	......	......	......	......	......	......	......	......	......
Westinghouse E. & M. *h*	50	25.00	23.50	25.25	24.00	24.00	......	22.50	......	......	......	......	......
Westinghouse E. & M. *g*	50	51.25	50.50	50.75	50.00	51.50	51.00	51.00	50.25	......	......	......	......

market prevent any general speculation in them. Speculation which was formerly so active in San Francisco is now practically dead and the transactions in the New York exchange are insignificant. The Klondike excitement in August and subsequent months led to the formation of numerous companies, and for a short time it looked as though there might be some speculation in this class of stocks. Fortunately, however, the slight foundation on which many of these companies was based soon became apparent, and most of them failed to make any serious impression upon the public, many of them in fact being obliged to withdraw from the field entirely.

The Boston Mining Stock Market in 1897.

Last year was an exceptionally good one for the copper stocks quoted in Boston, there having been great activity in the trading and gradually rising prices for the better class of stocks, two of which sold at the highest figures on record. The climax was reached in September when Calumet & Hecla sold at $495 per share and Boston & Montana at $152. During the remaining months of the year there was somewhat less activity and prices showed a slight decline from the high

FLUCTUATIONS OF MINING STOCKS AT BOSTON DURING 1897.—*Continued.*

Name of Company.	July.		August.		September.		October.		November.		December.		Sales.
	H.	L.	H.	L.	H.	L.	H.	L.	H.	L.	H.	L.	
Copper:													
Allouez *b*	1.00	.50	1.00	.63	1.50	.63	1.25	.50	1.00	.50	1.00	.50	20,568
Anaconda *a*	......	......	......	......	......	......	......	......	......	......	......	......	500
Arnold *b*	4.00	3.00	4.00	3.00	5.13	3.50	4.00	3.13	3.25	1.50	2.75	2.00	79,525
Atlantic *b*	23.00	20.00	26.00	21.50	27.75	25.00	25.25	23.00	24.00	21.50	27.00	23.00	31,755
Boston & Montana *a*	137.50	129.50	145.50	132.75	152.00	143.00	147.00	136.75	145.00	126.50	150.00	143.00	478,328
Butte & Boston. *a*	24.63	21.63	29.00	23.25	31.12	26.50	29.50	21.00	25.88	18.00	25.75	23.00	1,241,058
Calumet & Hecla *b*	400.00	385.00	425.00	339.00	495.00	416.00	475.00	450.00	465.00	452.00	475.00	463.00	6,035
Centennial *b*	8.00	6.63	10.88	6.88	25.00	10.00	21.00	13.00	18.25	13.75	18.13	18.25	428,908
Copper Falls *b*	......	......	......	......	......	......	......	......	......	......	......	......	150
Franklin *b*	16.00	13.50	18.00	15.00	32.50	16.50	22.50	19.50	20.25	16.00	19.00	17.25	34,071
Humboldt *b*	......	......	.35	......	......	......	......	......	......	......	.90	.70	7,750
Iroquois *b*	......	......	......	......	......	......	......	......	4.00	3.38	4.00	......	563
Kearsarge *b*	21.00	17.24	21.75	17.50	23.75	20.50	21.50	17.75	19.00	16.25	19.50	19.00	105,941
Old Dominion *c*	20.25	18.00	20.00	18.50	29.00	19.00	26.00	20.25	23.25	19.00	25.25	23.00	226,119
Osceola *b*	38.00	32.00	39.00	35.50	42.13	37.88	41.00	36.50	39.00	32.00	40.00	37.00	98,544
Quincy *b*	120.00	113.00	120.00	113.00	121.00	117.00	117.00	109.00	115.00	110.00	115.00	114.40	10,986
Quincy Scrip *b*	......	......	......	......	......	......	......	......	......	......	......	......	3,540
Tamarack *b*	136.00	125.00	140.00	130.00	146.00	136.00	140.00	128.00	133.50	125.00	133.00	127.00	17,241
Tamarack, Jr. *b*	21.74	10.38	20.88	17.50	20.00	16.50	15.88	14.00	16.00	13.00	16.00	15.00	34,472
Tecumseh *b*	2.50	1.00	3.00	2.00	4.75	2.25	4.63	3.00	4.00	2.50	4.00	3.00	22,446
Wolverine *b*	12.50	10.38	14.63	11.25	18.75	14.00	17.25	14.25	17.00	15.50	17.00	16.00	128,556
Gold:													
Boston & Cripple Cr'k *d*	.12	.08	.13	.08	.12	.08	......	......	......	......	......	......	15,700
Gold Coin *d*	4.88	3.00	3.38	3.00	3.38	2.88	3.00	1.50	2.38	1.50	2.00	......	180,960
Merced *e*	9.50	5.88	7.25	4.00	9.75	6.75	8.50	6.25	6.25	4.50	6.25	4.75	66,789
Pioneer *e*	6.00	4.75	6.75	4.13	7.63	6.00	......	......	6.00	5.00	5.85	......	168,561
Santa Ysabel *e*	15.75	13.50	15.75	13.75	18.00	15.00	15.00	9.38	9.88	6.75	8.00	7.50	62,298
Miscellaneous:													
Ætna *e*	......	......	4.25	3.50	......	......	......	......	......	......	4.00	......	1,975
Bonanza *i*	......	......	.45	......	......	......	......	......	......	......	......	......	12,170
Dominion Coal *f*	12.00	10.00	20.50	11.38	25.50	19.00	24.75	20.25	24.00	20.00	27.38	23.00	237,050
Dominion Coal *g*	85.00	82.50	110.00	83.00	109.75	106.00	107.50	101.00	105.00	104.00	112.50	109.50	9,687
Illinois Steel *j*	37.00	34.00	50.25	36.75	50.00	45.00	48.93	42.00	48.50	37.00	49.00	45.00	27,544
Lake Superior Iron *b*	......	......	......	......	20.50	......	21.00	......	......	......	......	......	155
Napa Con., Q. *e*	6.50	6.00	6.50	......	10.00	7.50	8.50	6.50	8.50	6.50	8.50	6.50	2,640
New Idria *e*	......	......	......	......	......	......	......	......	6.00	......	......	......	425
Westinghouse E. & M. *h*	......	......	......	......	......	......	......	......	......	......	19.00	......	1,955
Westinghouse E. & M. *g*	......	......	......	......	......	......	......	......	......	......	......	......	1.463
Total sales	......	......	......	......	......	......	......	......	......	......	......	......	3,766,443

(*a*) Montana. (*b*) Michigan. (*c*) Arizona. (*d*) Colorado. (*e*) California. (*f*) Nova Scotia.
(*g*) Preferred. (*h*) Pennsylvania. (*i*) Nevada. (*j*) Illinois.

FLUCTUATIONS OF MINING STOCKS AT COLORADO SPRINGS DURING 1897.

Name of Company.	Par Value.	January.		February.		March.		April.		May.		June.	
		H.	L.	H.	L.	H.	L	H.	L.	H.	L.	H.	L.
Alamo	$1.00	.06	.05	.05	.05	.05	.03	.05	.04	.03	.03	.04	.03
Anaconda Gold	5.00	.94	.70	.77	.53	.55	.52	.55	.30	.49	.29	.58	.42
Argentum-Juniata	2.00	.44	.40	.41	.28	.32	.20	.28	.13	.43	.14	.41	.30
Banner	1.00	.03	.02	.02	.02	.03	.03	.03	.01	.01	.01	.01	.009
Bob Lee	1.00	.01	.01	.01	.009	.009	.007	.007	.004	.006	.005	.007	.005
Creede & Cripple Creek	1.00	.07	.06	.06	.05	.05	.04	.04	.03	.03	.02	.03	.03
Cripple Creek Cons	1.00	.14	.11	.12	.10	.10	.04	.09	.06	.07	.06	.12	.07
Crœsus	1.00	.008	......	.009	.008	.008	.006	.006	......	......	......	......	......
Currency	1.00	......	......	......	......	......	......	......	......	......	......	......	......
Des Moines	1.00	.03	.02	.03	.02	.02	.01	.02	.01	.01	.01	.02	.01
Elkton Cons	1.00	......	......	1.35	1.34	1.35	1.18	1.20	.81	.97	.89	1.08	.93
El Paso	1.00	......	......	......	......	......	......	......	......	......	......	......	......
Fanny Rawlings	1.00	.11	.08	.10	.08	.08	.07	.09	.08	.12	.09	.18	.10
Favorite	1.00	.08	.06	.07	.06	.06	.05	.04	.04	.03	......	.03	......
Findley	1.00	......	......	......	......	......	......	......	......	......	......	......	......
Franklin	1.00	.009	.006	.006	.005	.005	.004	.005	.004	.004	......	.013	.012
Golden Fleece	1.00	.96	.82	.65	.36	.87	.20	.30	.25	.29	.25	.27	.25
Golden Hope	1.00	......	......	......	......	......	......	......	......	......	......	......	......
Hayden	1.00	......	......	......	......	......	......	......	......	......	......	.007	......
Ingham Cons	.50	.17	.14	.18	.18	......	......	.12	.09	......	......	......	......
Isabella	1.00	.55	.46	.52	.46	.51	.40	.42	.29	.33	.31	.34	.28
Isabella Stamped	1.00	.54	.44	.51	.46	.50	.40	.41	.30	.33	.31	.33	.28
Jack Pot	1.00	.08	.06	.06	.07	08	.07	.08	.06	.06	.05	.06	.05
Lillie	1.00	......	......	......	......	......	......	......	......	......	......	.15	.14
Magnet Rock	1.00	......	......	......	......	......	......	......	......	......	......	.01	......
Marion	1.00	.007	.006	.006	.005	.005	.004	.004	.008	......	......	......	......
Matoa	1.00	.11	.07	.09	.08	.09	.08	.10	.08	.07	.06	.07	.06
Mobile	1.00	......	......	......	......	......	......	......	......	......	......	......	......
Mollie Gibson	5.00	.65	.46	.54	.30	.33	.19	.23	.11	.70	.12	.70	.28
Moon-Anchor	1.00	......	......	......	......	......	......	......	......	......	......	......	......
Mt. Rosa	1.00	.14	.09	.12	.10	.11	.08	.09	.06	.07	.05	.09	.07
New Haven	1.00	......	......	......	......	......	......	......	......	......	......	.01	.01
Oriole	1.00	.03	.02	.02	.02	.02	.01	.01	.007	.01	.008	.01	......
Pharmacist	1.00	.16	.11	.14	.12	.15	.13	.15	.07	.11	.09	.10	.09
Pilgrim	1.00	......	......	.01	......	.01	.01	.01	.01	.02	.01	.02	......
Portland	1.00	1.34	1.26	1.32	.72	.93	.77	.80	.47	.54	.48	.84	.57
Prince Albert	1.00	......	......	......	......	......	......	......	......	......	......	......	......
Silver Gold	1.00	......	......	......	......	......	......	......	......	......	......	......	......
Specimen	1.00	.08	.07	.07	.07	.06	.05	.06	.04	.05	.03	.04	.03
Theresa	1.00	......	......	......	......	......	......	......	......	......	......	......	......
Trachyte	1.00	.03	.02	.02	......	.02	......	.02	......	.01	.01	.01	.006
Union	1.00	.32	.24	.27	.22	.22	.15	.16	.10	.14	.12	.17	.14
Work	1.00	.09	.07	.09	.08	.08	.06	.07	.04	.06	.05	.05	.04

level reached in September, but on the whole the year closed with a fair degree of buoyancy and good prices for active stocks.

A feature of the year was the consolidation of the Osceola, Tamarack Jr., Kearsarge, and Iroquois mining companies as the Osceola Consolidated Mining Co., with 100,000 shares of stock of which 50,000 went to the shareholders of the old Osceola Mining Co., and 41,000 shares to those of the other concerns, while 9,000 shares remained in the treasury as an asset to be sold for the purpose of increasing the mining and milling facilities when the management considers this advisable. Another new incorporation was the Isle Royale Consolidated Mining Co., which acquired the Huron, Grand Portage and Isle Royale mines, and is preparing for active production in 1898. The Baltic Mining Co. was also a new enterprise. This company, in which shareholders of the Atlantic are largely interested, bought the Six Mile Hill mine, situated near the Atlantic mine, and commenced its exploitation with rather encouraging results. The stock of the new company was not listed on the exchange, but sales were made on the street at from $5 to $12.75, with transactions at $8 at the end of the year.

The Calumet & Hecla Mining Co. paid dividends to the amount of $5,000,000, or $50 a share, including the one payable January 1, 1898; Tamarack paid $6

FLUCTUATIONS OF MINING STOCKS AT COLORADO SPRINGS DURING 1897.– *Continued.*

Name of Company.	July.		August.		September.		October.		November.		December.		Sales.
	H.	L.	H.	L.	H.	L.	H.	L.	H.	L.	H.	L.	
Alamo	.03	.03	.05	.03	.04	.03	.04	.03	.03	.03	.03	.03	486,233
Anaconda Gold	.53	.40	.54	.41	.51	.45	.48	.44	.45	.38	.43	.35	335,960
Argentum-Juniata	.42	.31	.26	.17	.23	.18	.25	.20	.21	.17	.20	.18	1,020,521
Banner	.01	.01	.02	.01	.02	......	.01	......	.01	.01	......	......	280,400
Bob Lee	.007	.006	.007	.006	.007	.005	.005	......	.005	.003	......	......	314,500
Creede & Cripple Creek	.03	......	.04	.01	.04	.04	.05	.04	.04	.04	.04	.03	268.000
Cripple Creek Cons	.10	.09	.10	.09	.12	.10	.10	.09	.09	.09	.10	.08	656,445
Crœsus	......	......	......	......	......	......	......	......	......	......	......	......	31,500
Currency	......	......	.03	.03	.04	.04	......	......	......	......	.02	......	113,550
Des Moines	......	......	.02	.01	.02	.01	.02	.02	.03	......	.02	.01	184,700
Elkton Cons	1.05	1.00	1.05	.96	1.08	.88	1.00	.90	1.08	.89	.88	.71	1,598,990
El Paso	......	......	......	......	.31	.23	.24	.20	.22	.20	.19	.15	229,000
Fanny Rawlings	.23	.15	.22	.15	.26	.15	.20	.17	.17	.12	.15	.13	820,204
Favorite	.05	......	.05	.04	.05	.04	.03	......	.10	.03	......	......	87.500
Findley	.02	.009	.02	.01	.01	.01	.01	......	.01	.01	.01	......	71,600
Franklin	.003	......	.010	.003	......	......	......	......	......	......	.005	.002	122,000
Golden Fleece	.24	.23	.26	.15	.52	.30	.65	.43	.70	.50	......	......	59,035
Golden Hope	......	......	.005	.004	......	......	......	......	......	......	......	......	24,000
Hayden	......	......	.01	.008	.01	.008	.009	.008	.008	.007	.006	......	8,000
Ingham Cons	.10	......	.16	.09	.18	.14	.23	.16	.21	.19	......	......	159,400
Isabella	.32	.29	.32	.30	.31	.28	.28	.22	.33	.27	.30	.28	2,883,095
Isabella Stamped	.30	.28	.32	.28	.31	.30	.27	.25	.31	.20	.30	.28	525,000
Jack Pot	.06	.05	.06	.05	.06	.05	.06	.06	.06	.05	.05	.04	804,775
Lillie	.20	.15	.50	.25	.60	.48	.69	.60	.70	.60	.71	.70	510,016
Magnet Rock	.02	.01	.02	......	.02	......	.02	.01	.02	.01	.01	.01	115,000
Marion	.003	......	.005	.004	.010	.005	.005	.004	.004	.003	.003	......	90,000
Matoa	.07	......	.11	.08	.11	.10	.11	.10	.18	.10	.16	.12	223.800
Mobile	......	......	.02	......	......	......	......	......	......	......	......	......	12,000
Mollie Gibson	.78	.32	.37	.20	.28	.18	.24	.20	.20	.15	.20	.18	660,450
Moon-Anchor	.66	.58	1.03	.62	1.02	.97	1.01	.80	.96	.90	.93	.88	172,700
Mt. Rosa	.09	.08	.09	.08	.10	.09	.09	.08	.10	.09	.13	.09	303,450
New Haven	.01	.01	.03	.02	.02	......	.02	.01	.02	.01	.01	.01	103,500
Oriole	.02	.01	.02	......	.02	......	......	......	.01	......	......	......	83,500
Pharmacist	.09	.08	.10	.09	.12	.09	.12	.09	.10	.06	.07	.06	2,212,200
Pilgrim	.02	.01	.02		.04	.01	.02	.02	.02	......	.02	......	260,700
Portland	.78	.71	.75	.58	.76	.68	.79	.74	.76	.68	.71	.66	372,830
Prince Albert	......	......	.03	.03	.04	.02	.03	......	.04	.03	......	......	39.500
Sliver Gold	.004	......	.007	.005	......	......	.004	......	.003	.002	......	......	36,000
Specimen	.04	.03	.05	.03	.06	.05	.05	......	05	.03	.04	......	137.700
Theresa	.07	.06	.17	.06	.13	.08	.06	.08	.12	.06	.07	.06	317.750
Trachyte	.01	......	.02	.01	.02	......	.02	.01	.02	.01	.01	.01	260,000
Union	.21	.13	.27	.18	.24	.20	.20	.14	.16	.12	.12	.10	2,469,881
Work	.05	......	.06	.04	.06	.05	.07	.04	.06	.04	.05	.04	825,000
Total shares sold	......	......	......	......	......	......	......	......	......	......	......	......	0,289.435

per share, or the same amount as in 1896. Quincy, which has now 100,000 shares, the scrip having become stock on April 16, paid $8 on February 15, of which $4 was called an extra dividend, and $4 on August 15 on the whole 100,000 shares of stock. The price of the stock was fairly steady throughout the year at about $115. Osceola paid $2 on the old stock of 50,000 shares, and on December 31 paid $1 on the full stock of 100,000 shares. Kearsarge had paid $1 per share previous to its consolidation with the Osceola.

Boston & Montana paid $12 per share in four dividends of $3 each. The lowest price for the year was $94.75 in January, and the highest $152 in September, the quotation at the end of the year being about $147. The stock is widely distributed and is a favorite with speculators owing perhaps to the large fluctuations to which it is subject. Another speculative stock is Butte & Boston, in which the largest transactions in 1897 were recorded. This company was reoganized during the year, the stockholders having been obliged to pay in $10 a share in four instalments of $2.50 each. This assessment enabled the management to cancel the floating indebtedness and provide working capital.

Of the non-dividend paying copper stocks Old Dominion of Arizona and Wol-

FLUCTUATIONS OF MINING STOCKS AT DENVER DURING 1897.

Name of Company.	Par Value.	January.		February.		March.		April.		May.		June.	
		B.	A.	B.	A.	B.	A.	B.	A.	B.	A.	B.	A.
Acacia	$1.00	......	......	......	......	......	......	......	......	......	......	.02	.03
Addie C	1.00	.005	.01	.005	.01	......	......	.002	.008	.001	.004	.008	.006
Ætna	1.00	.005	.01	.005	.007	.004	.006	.003	.005	.003	.004	.003	.006
Agate	1.00	.001	.002	.001	.002	.001	.006	.001	.002	......	......	.001	.002
Alamo	1.00	......	......	.05	.06	.05	.06	.04	.05	.02	.04	.02	.04
Anaconda	5.00	.70	.93	.54	.77	.53	.57	.29	.54	.30	.53	.40	.61
Anchoria-Leland	1.00	......	......	......	......	......	......	......	......	.88	.95	.98	1.02
Andes	1.00	......	......	......	......	......	......	.002	.002	......	......	.002	.003
Annapolis	1.00	.001	.004	......	......	......	......	......	......	......	......	......	......
Aola	1.00	.02	......	.01	.02	.01	.02	.009	.02	.01	......	.008	.011
Arcadia	1.00	.004	.007	.003	.008	.005	.01	......	......	.002	.003	......	......
Arcadia Con	1.00	.06	.10	.06	.07	.05	.06	.02	.05	.01	.04	.01	.03
Argentum-Juniata	2.00	.37	.50	.30	.42	.23	.34	.15	.30	.18	.43	.30	.41
Bangkok	1.00	.03	.04	.02	.05	.03	.04	......	......	.01	.04	.01	.06
Bankers	1.00	.09	.12	.08	.11	.07	.10	.05	.08	.04	.06	.02	.05
Ben Hur	1.00	.04	.05	.05	.07	.05	.06	......	......	......	......	.04	.03
Big Johnny	1.00	.003	.004	.001	.003	.002	.004	......	......	.002	.003	.002	.004
Big Six	1.00	......	......	.04	.10	.05	.10	......	......	......	......	.09	.10
Blue Bell	1.00	......	......	......	......	......	......	......	......	......	......	......	......
Blue Jay	1.00	......	......	.002	.003	.002	.003	......	.002	.001	......	.001	.002
Bob Lee	1.00	.01	.02	.009	.01	.007	.010	.004	.008	.004	.01	.005	.008
Boston & Cripple Creek	1.00	.001	.002	......	......	.005	.007	.005	.006	.005	......	.013	......
Bradley-Pioneer	1.00	......	......	......	......	......	......	......	......	......	......	.004	......
Buckhorn	1.00	.03	.04	.08	.04	......	......	.02	.08	.01	.02	.01	.03
Cannon Ball	1.00	.004	.006	.003	.006	.004	.007	.004	.006	.005	.008	.003	.003
Champagne	1.00	.005	.007	......	......	......	......	.003	.004	.001	.004	.002	.003
Chimborazo	1.00	.006	.01	.004	.007	.004	.006	.003	.004	.003	.004	.002	.004
Cripple Creek Imp.	1.00	.002	.003	.001	.002	.001	.003	.001	.002	.001	.002	.001	.002
Colorado C. & M.	1.00	.03	.04	.03	.03	.03	.03	.01	.03	.02	.02	.01	.02
Colorado Giant	1.00	......	......	......	......	......	......	......	......	.002	.003	.003	.012
Copper Mountain	1.00	......	......	......	......	......	......	......	......	......	......	......	......
C. K. & N.	1.00	.01	.02	......	......	.007	.01	.008	.008	.005	......	.004	.009
Creede & Cripple Creek	1.00	.06	.08	.04	.08	.04	.08	......	......	......	......	.01	.03
Cripple Creek Con.	1.00	.12	.14	......	......	.09	.11	......	......	.08	.07	.02	.12
Currency	1.00	......	......	......	......	......	......	......	......	......	......	......	......
Defender	1.00	.006	.008	.003	.007	.001	.006	.004	.005	.006	......	......	......
Des Moines	1.00	......	......	......	......	......	......	......	......	......	......	......	......
Dictator	1.00	.002	.004	.001	.003	.001	.002	.001	.002	.001	.002	......	.001
Dixie	1.00	.001	.003	.001	.002	.001	.002	.001	......	......	.001	......	.001
Drexel	1.00	.005	......	.001	.002	......	......	......	......	......	......	.003	.007
Eclipse	1.00	.003	.005	.002	.004	.002	.003	......	......	......	......	.001	.003
Elkton	1.00	1.00	1.36	......	......	1.12	1.35	.85	1.06	.88	.95	.90	1.04
Enterprise	1.00	.05	.07	......	......	.05	.08	.05	.06	......	......	......	......
Eureka	1.00	......	......	.005	.01	.002	.005	.001	.005	.001	.002	......	......
Fanny B.	1.00	......	......	......	......	......	......	......	......	.04	.05	.03	......
Fanny Rawlings	1.00	......	......	......	......	......	......	......	......	......	......	......	......
Finance	1.00	.006	.01	.004	.008	.001	.008	.004	.004	.003	.005	.002	.007
Findley	1.00	......	......	......	......	.02	......	......	......	.009	.01	.01	.01
Forest Rock	1.00	.001	.003	.001	.003	.002	......	......	......	.001	.002	.001	......
Garfield Grouse	1.00	.08	.10	.06	.09	.05	.08	.05	.07	.04	.06	.04	.05
Gene Field	1.00	.002	.003	.001	.003	.001	.002	.001	.002	......	......	.001	.002
Geo. Washington	1.00	.002	.003	.001	.002	.001	.003	.002	.004	.002	.003	.002	.003
Gold Coin	5.00	......	......	......	......	......	......	.40	.43	.40	.42	......	......
Gold Eagle	1.00	......	......	......	......	......	......	......	......	......	......	......	......
Gold Field	1.00	.001	.004	.002	.003	.002	.003	.001	.002	.001	......	.001	.002
Gold Fleece	1.00	.75	1.00	.50	.78	.24	.45	.26	.30	.23	.26	.19	.23
Gold & Globe	1.00	......	......	......	......	......	......	......	......	......	......	......	......
Gold Hope	1.00	.005	.01	......	......	......	......	......	......	......	......	.002	.004
Gold Queen	1.00	.001	.002	.001	.002	.001	......	......	.001	......	......	.001	......
Gold Smith	1.00	.004	.005	.004	.006	.004	.004	.003	.006	.003	.005	.001	.004
Gold Stand	1.00	.04	.05	.04	.06	.04	.06	.03	.05	.02	.04	.02	.03
Gold Stone	1.00	.006	.01	.006	.01	.006	.008	.002	......	.003	.005	......	......
Granite Hill	1.00	......	......	......	......	......	......	......	......	.01	.03	......	......
Gregory	1.00	.003	.004	.003	.004	.002	.004	.002	.003	.003	.006	.004	.006
Gregory-Leasing	1.00	......	......	......	......	.007	.01	.009	.015	.006	.01	.008	.03
Hansel	1.00	......	......	......	......	......	......	......	......	......	......	......	......
Hayden Gold	1.00	......	......	......	......	......	......	......	......	......	......	.008	......
Hecla	1.00	.002	.005	.002	.010	.001	.004	.001	.002	......	......	.001	......
Henrietta	1.00	......	......	.004	.008	.003	.009	.004	.007	.002	.004	.002	.004
Humboldt	1.00	......	......	......	......	.002	......	......	......	......	......	......	......
Illinois	1.00	.007	.015	.008	.011	.007	.009	.003	.007	.003	.008	.004	.010
Insley	1.00	......	......	.003	.006	.003	.006	.004	.006	.003	.005	.003	.005
International	1.00	.001	.004	.001	.003	.001	.002	.001	.002	.001	.002	......	.001
Iowa	1.00	......	......	......	......	.40	.50	......	......	......	......	......	......
Iron Clad	1.00	.07	.08	.05	.08	.05	.08	.05	.07	.06	.07	.05	.07
Isabella	1.00	.45	.56	.47	.52	.40	.52	.29	.42	.31	.35	.24	.33
Jack Pot	1.00	.06	.08	.07	.08	.07	.08	.05	.08	.05	.06	.05	.06
Jefferson	1.00	.11	.16	.10	.15	.09	.13	.09	.10	.06	.09	.07	.11
Jennie Blanche	1.00	......	......	......	......	......	......	......	......	......	......	......	......
Justine	1.00	.001	.005	.001	.003	.001	.004	.002	.004	.002	......	......	......
Keystone	1.00	......	......	......	......	......	......	......	......	......	......	......	......

FLUCTUATIONS OF MINING STOCKS AT DENVER DURING 1897.—*Continued.*

Name of Company.	July.		August.		September.		October.		November.		December.		Sales.
	B.	A.	B.	A.	B.	A.	B.	A.	B.	A.	B.	A.	
Acacia					.04	.04	.02	.03					6,000
Addie C.	.004	.012	.009	.010	.005	.01	.008	.01	.008	.006			87,700
Ætna	.008	.004	.008	.008	.004	.007	.002	.005	.008	.004	.002	.008	645,500
Agate	.001	.002	.001	.002	.001								88,000
Alamo	.02	.04	.03	.05	.08	.05	.08	.04	.03	.04			253,600
Anaconda	.38	.53	.39	.57	.44	.52	.43	.47	.35	.46	37	45	406,909
Anchoria-Leland	.97	.02	.98	1.02	.98	1.06	1.01						11,800
Andes	.002	.005											5,000
Annapolis									.001	.002			2,000
Aola	.010	.015	.009	.02	.009	.02	.007	.011	.009	.01	.07	.18	135,500
Arcadia					.003	.003			.002	.003			24,000
Arcadia Con	.02	.03	.03	.05	.03	.05	.03	.04	.03	.04			167,200
Argentum-Juniata	.31	.42	.16	.31	.17	.24	.18	.23	.18	.25	.17	.20	128,987
Bangkok	.01	.04	.01	.03	.01	.03	.01	.03	.01	.04	.01	.02	20,100
Bankers	.03	.06	.05	.10	.05	.07	.05	.06	.03	.04	.03	.04	99,200
Ben Hur	.03	.04	.04				.03	.04	.01	.04	.03		27,000
Big Johnny	.002	.005	.003	.005	.003	.004	.002	.004	.001	.003	.001	.003	166,500
Big Six			.07	.08	.08	.13	.07	.15					
Blue Bell					.03								1,000
Blue Jay	.001	.002	.001	.002	.001	.002	.001	.002	.001	.004	.01		367,700
Bob Lee	.005	.007	.006	.009	.004	.007	.004	.007	.003	.007	.02	.05	932,000
Boston & Cripple Creek					.003	.004	.003	.005	.003	.005	.001	.004	294,200
Bradley-Pioneer							.003	.003	.001	.002			24,000
Buckhorn	.01	.04	.02	.03	.02	.03							40,000
Cannon Ball	.003	.010	.005	.007	.004	.007	.004	.006	.002	.005	.001	.009	1,273,000
Champagne	.002	.003			.002	.005	.001	.005	.001	.002	.001	.002	113,500
Chimborazo			.004	.007	.003	.006	.003	.005	.003	.005	.001	.008	84,100
Cripple Creek Imp	.001		.001	.002			.001	.003	.001	.002	.001	.003	1,501,000
Colorado C. & M.	.02	.02	.02	.02	.02	.03	.02	.03	.01	.02	.02		176,500
Colorado Giant	.006	.010	.007	.010	.005	.010	.006	.010	.005	.010	.005	.010	1,059,000
Copper Mountain			.006	.007	.007		.009	.01					52,000
C. K. & N	.005	.02	.01	.02	.009	.012	.004	.01	.006	.008			18,500
Creede & Cripple Creek	.03				.01	.05	.03	.05					318,000
Cripple Creek Con	.08	.10	.09	.11	.09	.12	.08	.10	.08	.10	.08	.10	72,900
Currency					.03	.05							1,000
Defender	.003	.004	.003	.005	.003	.005	.001	.005			.001	.002	104,800
Des Moines			.02										1,000
Dictator	.001	.002			.001	.002	.001	.002	.001		.001		1,128,000
Dixie		.001		.001	.001				.001				284,000
Drexel													71,000
Eclipse	.001		.001	.003	.002	.005	.001	.005	.001	.004	.001	.003	79,500
Elkton	.97	1.08	.90	.108	.91	1.06	.89	1.00	.85	1.03	.71	.90	48,900
Enterprise													12,000
Eureka							.001	.002	.001	.003			35,000
Fanny B.			.05	.06	.03		.04		.06				7,400
Fanny Rawlings			.20	.27	.27								500
Finance	.003	.011	.003	.006	.003	.005	.002	.006	.003	.004	.002	.003	539,000
Findley	.009	.011	.010	.02	.02				.011	.01			38,500
Forest Rock									.003				26,000
Garfield Grouse	.04	.06	.04	.03	.03	.05	.04	.05	.03	.05	.03	.04	199,875
Gene Field	.001	.002	.001	.007	.003	.004	.002	.003	.002	.003	.001	.003	628,500
Géo. Washington	.002	.004	.003	.004	.002	.003	.002	.004	.002	.003	.001	.002	617,700
Gold Coin	.52	.65					.670	.75	.86	.92			2,100
Gold Eagle					.02								2,000
Gold Field	.007	.002	.001	.004	.001	.002	.001	.002	.001	.002	.001		902,900
Gold Fleece	.18	.30	.18	.32	.26	.50	.38	.66	.50	.69	.45	.55	45,770
Gold & Globe	.10	.25	.12	.14	.04	.04							200
Gold Hope	.001	.004	.001	.003					.001	.002			280,500
Gold Queen		.001	.001	.002	.001	.002	.002	.006	.001	.002	.001		1,420,000
Gold Smith					.002	.005	.002	.005	.002	.005	.001	.004	146,000
Gold Stand	.03	.04	.03	.04	.04		.03	.04	.02	.04	.01	.03	881,800
Gold Stone													8,000
Granite Hill							.03						1,400
Gregory	.005	.006	.005	.007	.005	.008	.006	.010	.006	.009	.005	.02	2,141,400
Gregory-Leasing	.01	.03	.01	.02	.009	.03	.008	.02	.009	.02	.01	.02	267,750
Hansel	.03	.04											66,000
Hayden Gold													7,000
Hecla			.002	.003	.001	.01	.001	.003	.002				758,800
Henrietta	.002	.007	.003	.004	.003	.006	.002	.006	.001	.004			585,600
Humboldt													2,000
Illinois	.006	.008	.006	.008	.005	.008	.004	.007	.005		.005		675,000
Insley	.003	.006	.003	.005	.003	.004	.001	.006	.002	.003	.002	.004	204,500
International						.002	.001	.002	.001				311,000
Iowa													600
Iron Clad	.03	.06	.03	.05	.03	.06	.01	.04	.04	.06	.03	.04	455,150
Isabella	.29	.32	.29	.32	.28	.31	.23	.29	.27	.32	.28	.30	553,800
Jack Pot	.04	.06	.05	.07	.05	.07	.05	.06	.05	.06			83,400
Jefferson	.07	.10	.04	.09	.05	.09							452,000
Jennie Blanche			.05	.07	.06	.11	.10	.17	.16	.21	.20	.23	432,000
Justine	.001	.002	.001	.002	.001	.002	.001	.003	.002	.003	.002	.007	589,700
Keystone			.03	.03	.05	.07	.03	.05					

FLUCTUATIONS OF MINING STOCKS AT DENVER DURING 1897.—*Continued.*

Name of Company.	Par Value.	January.		February.		March.		April.		May.		June.	
		B.	A.	B.	A.	B.	A.	B.	A.	B.	A.	B.	A.
Kimberly	1.00	.02	.03	.01	.03	......	......	.01	.02	.01	.03	.02	.04
Ladessa	1.00	......	......	......	......	......	......	......	......	......	......	.002	......
Lily	1.00	......	......	......	......	......	......	......	......	......	......	......	......
Lincoln Boy	1.00	.001	.002	.001	......	.001	.002	......	.001	.001	......	......	......
Little Dorrit	1.00	.003	......	.002	.003	.001	.002	......	......	......	......	......	......
Loraine	1.00	......	......	......	......	......	......	......	......	.001	.002	......	......
Magna Charta	1.00	......	......	......	......	.01	.03	......	......	......	......	......	......
Magnet R	1.00	......	......	......	......	......	......	.01	.01	......	......	......	......
Millionaire	1.00	.001	.003	.001	.003	.001	.002	......	......	......	......	......	......
Mollie Gibson	1.00	.50	.70	.37	.47	.19	.40	.10	.25	.13	.75	.24	.66
Monon	1.00	......	......	......	......	......	......	......	......	......	......	.001	......
Moon-Anchor	1.00	......	......	......	......	......	......	......	......	......	......	......	......
Mt. Beauty	1.00	.02	.04	.02	.03	......	......	.02	.03	.02	.03	.02	.03
Mt. Rosa	1.00	......	......	.06	.12	.10	.11	......	......	......	......	......	......
New Zealand	1.00	.03	.05	.03	.06	.05	.05	.06	.05	.04	.05	......	......
Nugget	1.00	......	......	......	......	......	......	......	......	......	......	......	......
Old Gold	1.00	.006	.009	.006	.008	.005	.008	.002	.006	.002	.004	.003	.006
Old Gregory	1.00	......	......	.05	......	.03	......	.02	.03	.02	.06	......	......
Orient	1.00	.001	.02	.001	.002	.001	......	......	.001	......	......	.001	......
People's	1.00	......	......	.02	.05	.02	.05	.02	.08	.009	.02	.03	......
Pharmacist	1.00	......	......	.10	.14	.10	.15	.02	.15	.09	.11	......	......
Pilgrim	1.00	.005	.008	.004	.007	......	......	.001	.005	.003	.005	.003	.004
Pine Creek	1.00	......	......	......	......	......	......	......	......	......	......	......	......
Portland	1.00	1.20	1.32	.70	1.18	.88	1.00	.40	.82	.50	.51	.52	.80
Puritan	1.00	.003	.007	.003	.006	.003	.004	.001	.003	.001	.003	.002	.003
Queen Victoria	1.00	.001	.006	.003	.005	.002	.004	.001	.003	.001	.002	.001	.002
Reno	1.00	.03	.05	.03	.04	.03	.04	.02	.03	.02	......	......	......
Royal Age	1.00	.001	.007	.002	.005	.002	.005	.003	.005	.001	.004	.001	.003
Santa Fe	1.00	.001	.005	.001	.002	.001	.003	.001	.002	.001	.001	.001	.002
Senator	1.00	.02	.004	.002	.003	.001	.002	.001	.002	.001	.001	.001	.001
Sentinel	1.00	.002	.004	.001	.004	.001	.003	......	.002	.002	.002	.002	.003
Seven Hills	1.00	.003	.009	......	......	.005	.010	......	......	......	......	......	......
Squaw Mountain	1.00	......	......	......	......	.02	.03	.02	.02	.02	.02	......	......
Tamarack	1.00	.02	.03	.02	.04	.02	.04	.03	.03	.02	.03	.02	.03
Three H's	1.00	......	......	......	......	.002	.004	.001	.003	.001	.002	.002	.003
Union Gold	1.00	.24	.33	.24	.26	.16	.24	.11	.16	.12	.15	.14	.17
Unity	1.00	.002	.006	.003	.003	.001	.005	......	......	......	......	......	......
Vanity Fair	1.00	......	......	......	......	......	......	......	......	......	......	.001	.003
Virginia Mountain	1.00	.04	.06	.04	.05	.06	.07	.04	.07	.02	.04	.02	.03
West Creek Con	1.00	......	......	.001	......	.001	.002	.001	.002	......	.001	......	.001
Wheel of Fortune Con.	1.00	.006	.008	.005	.010	......	......	......	......	.001	.003	.004	......
Work	1.00	.07	.09	.08	.09	.06	.09	.06	.07	.04	.05	.04	.06

verine of Michigan were largely dealt in. The latter has been steadily increasing its production and the shares have shown a rather steady upward tendency in consequence thereof.

The three California quicksilver companies which are listed on the Boston exchange, namely: The Ætna, Napa Consolidated, and New Idria, had a prosperous year, each one having paid dividends, but there were few transactions in the shares, which are held by a limited number of persons more as an investment than as a medium of speculation. Fluctuations in their prices were insignificant. There was considerable trading in the gold stocks, namely: Gold Coin of Colorado, and Merced, Pioneer, and Santa Ysabel of California. Gold Coin was the only dividend payer of the group. Santa Ysabel showed the largest fluctuations, having been quoted at $18 in September and at $5.60 at the end.

THE MINING STOCK EXCHANGES OF COLORADO IN 1897.

Last year was not as satisfactory to the Western exchanges as was anticipated, and notwithstanding the large output of the Cripple Creek district, and the increased dividends of several of the companies, investors were unwilling to go very deeply into this class of speculation.

The principal exchanges of the State are at Denver and Colorado Springs. At

FLUCTUATIONS OF MINING STOCKS AT DENVER DURING 1897.—*Continued.*

Name of Company.	July.		August.		September.		October.		November.		December.		Sales.
	B.	A.	B.	A.	B.	A.	B.	A.	B.	A.	B.	A.	
Kimberley	.03	.04	.03	.05	.03	.06	.03	.08	.03	.06	.02	.03	228,000
Ladessa	.002	.003	......	......	.003	......	.002	.004	......	......	......	......	6,000
Lily	......	......	......	......	.59	......	.58	.70	.63	.67	......	......	400
Lincoln Boy	.001	.002	.001	.002	......	.001	......	.001	.001	......	.001	......	99,000
Little Dorrit	.001	.002	......	......	.001	.003	.001	.003	.002	.003	......	......	48,000
Loraine	......	......	......	......	......	......	......	......	......	......	......	......	3,000
Magna Charta	......	......	......	......	......	......	......	......	......	......	......	......	2,000
Magnet R.	.01	.02	.01	.02	.02	......	.01	.02	.01	.02	.009	.01	25,000
Millionaire	.001	.002	.001	.002	.001	.002	.001	.002	.002	......	......	......	....
Mollie Gibson	.34	.11	.20	.25	.19	.29	.19	.25	.14	.23	.06	.21	91,900
Monon	.001	......	.001	.002	......	.002	......	......	.001	.02	......	......	....
Moon-Anchor	.51	.75	.80	1.04	.95	1.03	.87	1.00	.90	.98	.87	.95	7,790
Mt. Beauty	.02	......	......	......	......	......	.01	.02	......	......	......	......	....
Mt. Rosa	.05	.08	.08	......	......	......	......	......	......	......	.10	.14	11.500
New Zealand	......	......	.04	.08	.04	.08	.05	.07	.04	.06	.04	.06	140,200
Nugget	.06	.11	......	......	......	......	......	......	......	......	......	......	....
Old Gold	.004	.007	.006	.018	.006	.011	.007	.009	.007	.009	.006	.008	4,825,046
Old Gregory	......	......	......	......	......	......	.010	.02	.008	.009	.01	.08	173,000
Orient	.001	......	.001	.002	.001	......	......	.001	.001	......	.001	......	154,500
People's	.01	.04	.02	.04	.02	.04	.02	.04	.01	.02	.008	.02	140.500
Pharmacist	.08	.10	.09	.10	.09	.11	.10	.12	.06	.15	.06	.07	50,300
Pilgrim	.003	.004	.003	.005	.002	.005	.002	.005	.002	.004	.002	.003	147,000
Pine Creek	.005	.007	.005	.01	.005	.008	.004	.006	.002	.005	.004	.007	108,300
Portland	.65	.79	.60	.76	.66	.80	.71	.79	.67	.77	.67	.73	22,200
Puritan	.002	.004	.001	.004	.002	.004	......	.003	.002	.003	.001	.003	146,700
Queen Victoria	.002	.003	.002	.003	.002	.003	.002	.003	.001	.003	.001	.003	276,000
Reno	.01	.02	.02	.02	.01	.02	.01	.02	.008	.02	.01	.03	258,500
Royal Age	.002	.003	.002	.003	.001	.003	.002	.003	.001	.003	.002	......	2,351.000
Santa Fe	.001	.003	.001	.003	.001	.003	.001	.001	.001	.003	.01	.02	652,000
Senator	.001	.002	.001	.002	.001	......	.001	.002	.001	......	.001	......	1,176.000
Sentinel	.002	.003	.002	.003	.001	.004	.002	.002	.001	.003	.001	.003	3,505.150
Seven Hills	.002	.005	.004	.006	.004	.008	.004	.006	.002	.006	.003	.006	122.500
Squaw Mountain	.02	.02	......	......	.02	.02	......	......	.01	.02	.007	.018	124.500
Tamarack	.03	.04	.01	.03	.01	.02	.008	.02	.005	.01	.007	.009	2,815.200
Three H's	.004	.003	.003	.005	.001	.004	.002	.003	.001	.003	.002	.003	1,026,900
Union Gold	.12	.18	.15	.25	.19	.25	.15	.20	.12	.16	.11	.13	90,050
Unity	.001	.003	.001	.002	.001	.002	......	......	.001	.003	......	......	94,100
Vanity Fair	......	......	.001	.003	.001	.003	.001	.002	.001	.002	.01	......	176,000
Virginia Mountain	.03	.04	.03	.04	.02	.04	.02	.03	.01	.02	.02	.....	1.325.000
West Creek Con	......	.001	......	.001	......	.001	......	.001	.001	......	.001	......	1,019,000
Wheel of Fortune Con.	.001	.004	.003	.007	.005	.008	.004	.005	.003	.006	.001	.004	92,000
Work	.05	.06	.04	.06	.03	.06	.04	.05	.04	.05	.04	.05	63,400
Total shares sold	......	......	......	......	......	......	......	......	......	......	....	......	31,432,235

the former the sales during 1897 amounted to nearly 45,000,000 shares, chiefly of low-priced stocks. The officers of this exchange made every effort during the year to weed out stocks that had no value. The Colorado Springs Mining Stock Association absorbed the business of the Board of Trade Exchange. The association is well managed by its officers, and as a result it carries the better class of the Colorado stocks on its board. The total dealings in 1897 aggregated about 38,000,000 shares.

THE NEW YORK MINING STOCK MARKET IN 1897.

The record of the New York mining stock market in 1897 was practically a a repetition of that in 1896. The total number of shares sold was 12,429,967. The largest transactions were in Cannon Ball, a Colorado stock with par value of $1 per share, which sold at $20 to $2 per 1,000. Gold Magnet and Justine also showed transactions of upward of 1,000,000 shares, but the former ranged from only $0.10 to $0.01 per share, while the latter fluctuated between $1 and $40 per 1,000; consequently the amount of money involved in these transactions was not important. Of the better-known shares there were small transactions in Anaconda and Anchoria-Leland, both of Cripple Creek, Colo., Argentum-

FLUCTUATIONS IN THE PRICES OF STOCKS AT NEW YORK DURING 1897.

Name and Location of Company.	Par Value.	January.		February.		March.		April.		May.		June.	
		H.	L.	H.	L.	H.	L.	H.	L.	H.	L.	H.	L.
Alamo (g.), Colo	$1	.08	.05	.06	.05	.07	.04	.06	.02	.04	.02	.04	.03
Alice (g.), Mont	25					.35		.70	.50	.65		.80	.60
Anaconda (g.), Colo	5	.83	.76	.76	.55	.56	.50	.54	.31	.40	.28	.54	.30
Anchoria-Leland, Colo	1	1.35		1.50	1.35	1.10						1.00	
Annetta, Colo	1			.20	.14	.18	.10	.25	.15	.31	.26	.36	.31
Argentum-Juniata (g. s. l.), Colo	2	.40	.39	.43	.35	.38	.19	.28	.13	.15	.13	.35	.30
Barcelona (s. g.), Nev	5											.05	
Belcher (s. g.), Nev	100	.55	.42			.15		.44		.20		.20	.14
Best & Belcher (g. s.), Nev	100	.98	.60	.75	.70	.70	.65			.80	.50	.66	.43
Breece (s. l.), Colo	25			.17	.13	.19	.15	.20				.27	.25
Brunswick Cons. (g.), Cal	1	.21	.17	.18	.15	.15	.06	.11	.07	.09	.06	.08	.06
Bullion-Beck & Champ. (g. s. l. c.), Utah.	10												
Cannon Ball, Colo	1												
Catalpa (s. l.), Colo	10											.08	.06
Chollar (s. g.), Nev	100	.90				1.35				.80		1.00	.73
Chrysolite (s. l.), Colo	100	.12	.09	.10		.10				.12	.09	.14	.09
Colombian (g), Rep. of Col	1					.38	.35	.72	.38	.85	.71	.84	.79
Comstock Tunnel (s. g.), Nev	100	.06	.05			.05		.05		.06	.05	.06	.04
Comstock Tunnel, Bonds	100			.05		.05							
Cons. California & Virginia (s. g.), Nev.	100	2.30	1.20	2.35	2.00	1.40	1.15	1.90	1.10	2.60	1.70	1.80	1.40
Cons. Imperial (g. s.), Nev	100	.02										.02	
Creede & Cripple Creek (g.), Colo	1	.07	.06	.07	.04	.06	.05	.05	.04	.04	.02	.05	.03
Cripple Creek Cons. (g.), Colo	1	.13	.12	.13	.10	.13	.09	.09	.05	.07	.03	.11	.06
Crœsus (g.), Colo	1	.02		.02		.01							
Crown Point (g. s.), Nev	100	.35	.25			.15		.35				.20	.15
Dalton (s.), Utah	25	.20											
Daly (s. l.), Utah	20	4.50											
Deadwood-Terra (g.), So. Dak	25	1.25		1.15	1.10	1.45		1.25		1.15	1.05	1.30	.50
Eagle, Colo	5							.02	.01	.02	.01	.06	.02
Elkton Cons., Colo	1	1.27	1.23	1.46	1.27	1.52	1.21	1.15	1.00	.91	.87	1.05	.91
Fanny B., Colo	1	.08		.08	.07	.10	.07	.09	.07	.18	.05	.10	.08
Father de Smet (g.), So. Dak	100												
Favorite (g.), Colo	1			.07	.06	.07				.05		.10	.08
Fortuna (g.), Mex	10												
Garfield Grouse, Colo	1			.09	.07	.07	.06			.05	.03	.06	.03
Gold Cliff, Colo	1	.37	.34	.36	.35	.13						.18	.17
Gold Coin (g. s.), Colo	5	3.88	3.75	3.63	3.38	5.00	3.38	5.50		4.90	4.50	5.50	4.25
Golden Fleece (g. s.), Colo	1			.33	.35	.38	.27	.28		.29	.19	.26	.20
Gold Exploration (g.), Colo	1	.13		.12	.10	.12	.10						
Gold & Globe (g.), Colo	1	.12	.11			.20	.10						
Gold Magnet (g.), Colo	1												
Golden San Juan (g.), Colo	1			.18	.07	.25	.16	.23	.20			.10	
Gould & Curry (s. g.), Nev	100	.32								.20		.35	.20
Hale & Norcross (g. s.), Nev	100	1.25		1.05	1.00	.80				.85	.80	.75	.70
Homestake (g.), So. Dak	100	40.00								39.00	35.00	40.00	35.00
Horn Silver (s. l.), Utah	25	1.60	1.45	1.80	1.70	1.79	1.60	1.70	1.55	1.60		1.70	1.45
Iron Silver (s. l.), Colo	20	.34	.30	.35		.40	.39	.35	.34	.37	.35	.36	.32
Isabella (g.), Colo	1	.53	.49	.52	.45	.51	.41	.37	.27	.36	.28	.33	.29
Jack Pot (g.), Colo	1	.08		.08	.06	.08	.06	.08	.05	.06	.05	.06	.05
Japan (g.), Colo	10			2.60	2.52	3.00	2.60	5.88	1.50	5.62	1.75		
Jefferson (g.), Colo	1			.15	.12	.15	.13	.10	.08	.09	.07	.10	.06
Justine (g.), Colo	1												
Kingston & Pembrooke (i.), Ont	10	.24		.27	.22	.30	.27			.50	.28	.30	.36
Lacrosse (g.), Colo	10	.09		.08						.09		.13	.09
Leadville Cons. (g.), Colo	10	.10		.10		.11	.09			.08		.14	.12
Little Chief (s. l.), Colo	50	.10		.20	.10	.20	.18			.14		.21	.14
Mercur (g.), Utah	25											8.50	6.75
Mexican (g. s.), Nev	100	.55	.45	.50	.40	.32		.47	.25	.42		.33	.27
Miami, Colo	1											.27	.18
Mollie Gibson (s.), Colo	5			.51	.33	.35	.18	.20	.09	.72	.10	.55	.35
Moulton (s. g.), Mont	5			.20								.09	.07
Mt. Rosa (g.), Colo	1	.15	.11	.18	.10	.11	.10			.09	.04	.10	.06
New Haven (g.), Colo	1	.04	.03	.04	.03	.03	.02	.03	.01	.03	.02	.03	.01
North Star (g.), Cal	10												
Occidental Cons. (g. s.), Nev	100												
Old Dominion (c.), Ariz	25	17.08	17.00			17.75	13.50			15.25		17.50	15.00
Old Gold (g.), Colo	1												
Ontario (s. l.), Utah	100	10.75	10.00			11.00	9.00	8.50		9.25	8.25	8.00	6.25
Ophir (g. s.), Nev	100	1.00		1.00	.80	.95	.80			1.00	.90	.90	
People's (g.), Colo	1			.07	.05	.05							
Pharmacist (g.), Colo	1	.16	.13	.15	.12	.16	.12	.14	.10	.11	.09	.13	.09
Phœnix Cons. (g.), Ariz	100	.05	.04			.06	.04	.04		.06	.03	.05	.04
Plymouth (g.), Cal	10											.18	
Portland (g.), Colo	1	1.27	1.25	1.27	.77	.91	.75	.69	.49	.50		.82	.57
Potosi (g. s.), Nev	100									.60		.60	.40
Quicksilver (q.), Cal. (com.)	100									2.00	1.50	2.00	1.00
Quicksilver (q.), Cal. (pref.)	100	11.75								10.00		10.00	7.00
Red Bird (g.), Colo	1	.05	.02	.15	.09								
Red Mountain (g.), Colo	5	.24	.18	.30	.24	.28	.24	.27	.26	.27	.15	.25	.10
Rocky Mountain (g.), Colo	1												

FLUCTUATIONS IN THE PRICES OF STOCKS AT NEW YORK DURING 1897.—*Continued.*

Name and Location of Company.	July.		August.		Septemb'r		October.		November		December		Sales.
	H.	L.	H.	L.	H.	L.	H.	L.	H.	L.	H.	L.	
Alamo (g.), Colo	.05	.03	.06	.03	.05	.03	.04	.03	.04	.02	.03	.02	369,700
Alice (g.), Mont	....	....	.35	.34	....	....	.40	.30	....	....	....	....	4,700
Anaconda (g.), Colo	.47	.38	.52	.39	.51	.40	.48	.44	.43	.40	.40	.37	56,400
Anchoria-Leland, Colo	1.03	.98	.99	.98	....	....	....	....	1.05	.96	.99	.90	9,800
Annetta, Colo	.46	.37	.47	.44	.48	.41	.47	.45	.46	.43	.46	.44	251,100
Argentum-Juniata (g. s. l.), Colo	.56	.36	.21	.16	.21	.16	.21	.19	.22	.17	.20	.19	54,050
Barcelona (s. g.), Nev	.04	....	....	....	....	....	.05	.03	.04	.03	....	....	2,500
Belcher (s. g.), Nev	.15	....	.36	....	.55	.40	.30	....	.32	....	.24	.15	4,350
Best & Belcher (g. s.), Nev	.56	.37	.67	.59	.90	.78	.85	.47	.48	.36	.57	.44	12,390
Breece (s. l.), Colo	....	....	.38	.33	....	....	....	....	....	....	....	....	3,200
Brunswick Cons. (g.), Cal	.12	.06	.22	.14	.21	.14	.15	.09	.15	.10	.14	.12	178,350
Bullion-Beck & Champ. (g.s.l.c.), Ut.	....	....	....	....	....	....	....	....	.15	....	....	....	270
Cannon Ball, Colo	....	....	.019	.005	.01	.007	.008	.006	.009	.002	.003	.002	1,524,100
Catalpa (s. l.), Colo	.09	.06	....	....	....	....	....	....	....	....	.09	....	4,000
Chollar (s. g.), Nev	.80	.70	.78	....	....	....	....	....	....	....	.37	....	14,450
Chrysolite (s. l.), Colo	....	....	.12	....	.10	....	....	....	....	....	.10	.09	9,900
Colombian (g.), Rep. of Col.	.85	.80	....	....	....	....	....	....	....	....	....	....	55,400
Comstock Tunnel (s. g.), Nev	.06	.04	.05	.01	.05	....	.06	.04	.04	....	.05	....	83,700
Comstock Tunnel, Bonds	....	....	.05	.04	.05	....	....	....	.04	....	....	....	15,000
Con. California & Virginia (s.g.), Nev.	1.50	1.20	1.50	1.10	1.75	1.45	1.70	1.25	1.30	1.05	2.40	1.00	16,960
Cons. Imperial (g. s.), Nev	....	....	....	....	.06	.04	.03	....	.03	....	.03	....	15,100
Creede & Cripple Creek (g.), Colo	.04	.01	.04	.01	.05	.04	.05	.04	.05	....	.04	....	97,850
Cripple Creek Cons. (g.), Colo	.11	.03	.11	.08	.13	.09	.12	.08	.10	.08	.12	.08	482,500
Crœsus (g.), Colo	....	....	.01	....	....	....	....	....	.01	....	.01	....	8,200
Crown Point (g. s.), Nev	....	....	.40	....	.57	.30	.85	.65	.23	.20	.10	....	7,350
Dalton (s.), Utah	....	....	....	....	....	....	....	....	....	....	....	....	500
Daly (s. l.), Utah	....	....	....	....	....	....	....	....	....	....	....	....	10
Deadwood-Terra (g.), So. Dak	....	....	....	....	....	....	....	....	....	....	....	....	13,820
Eagle, Colo	.04	.02	....	....	....	....	....	....	....	....	....	....	56,200
Elkton Cons., Colo	1.50	.99	1.05	.95	1.00	.94	....	....	1.01	.91	.90	.73	33,300
Fanny B., Colo	.06	.04	.06	.04	.05	.04	.05	.03	.07	.03	.07	.04	81,900
Father de Smet (g.), So. Dak	.16	....	....	....	....	....	....	....	....	....	....	....	500
Favorite (g.), Colo	.05	....	....	....	....	....	....	....	....	....	....	....	7,500
Fortuna (g.), Mex	....	....	12.50	10.00	11.75	9.00	11.25	10.88	11.13	11.00	....	....	31,640
Garfield Grouse, Colo	.05	....	.06	.04	.09	.04	.05	.03	.05	.04	.05	.04	242,800
Gold Cliff, Colo	.20	.17	.19	....	....	....	....	....	....	....	....	....	13,850
Gold Coin, (g. s.), Colo	4.75	4.00	4.00	3.75	3.75	2.75	2.75	1.50	....	....	5.50	2.00	6,870
Golden Fleece (g. s.), Colo	.25	.14	.23	.14	.35	.20	.55	.30	.64	.51	.53	.40	87,300
Gold Exploration (g.), Colo	....	....	....	....	....	....	....	....	....	....	....	....	9,300
Gold & Globe (g.), Colo	....	....	....	....	....	....	....	....	....	....	....	....	6,000
Gold Magnet (g.), Colo	....	....	.10	.07	.10	.01	.09	.03	.04	.02	.09	.03	1,138,750
Golden San Juan (g.), Colo	.30	.20	....	....	....	....	....	....	.11	.10	.04	.01	316,800
Gould & Curry (s. g.), Nev	.36	.30	.44	.29	.60	....	.45	....	.28	....	.40	....	17,500
Hale & Norcross (g. s.), Nev	.95	.75	.89	.85	....	....	1.25	1.15	....	....	1.35	1.10	5,900
Homestake (g.), So. Dak	40.00	38.00	35.00	....	39.00	37.00	38.50	37.75	40.25	38.00	40.00	30.00	2,353
Horn Silver (s. l.), Utah	1.50	....	1.50	....	1.10	1.00	1.60	1.25	1.65	1.53	1.55	....	9,530
Iron Silver (s. l.), Colo	....	....	.30	....	.25	....	....	....	.25	....	.50	.30	11,700
Isabella (g.), Colo	.34	.30	.33	.30	.30	.27	.30	.24	.31	.27	.31	.28	244,800
Jack Pot (g.), Colo	.07	.05	.06	.05	.06	.05	.07	.05	....	....	....	....	106,200
Japan (g.), Colo	....	....	....	....	....	....	....	....	....	....	....	....	18,000
Jefferson (g.), Colo	.08	.07	.09	.06	.08	.06	....	....	.06	.05	.05	.04	622,900
Justine (g.), Colo	....	....	....	....	.04	.01	.007	.002	006	.001	.02	.004	1,456,208
Kingston & Pembrooke (i.), Ont	.28	....	.28	....	....	....	.29	....	.25	.24	.23	....	83,773
Lacrosse (g.), Colo	.13	....	.11	.10	.12	....	....	....	....	....	....	....	13,000
Leadville Cons. (g.), Colo	.14	.12	....	....	.10	.09	.10	.08	.25	....	....	....	37.100
Little Chief (s. l.), Colo	....	....	....	....	.17	.13	.13	.12	.14	....	.14	....	7,300
Mercur (g.), Utah	7.50	6.50	....	....	....	....	....	....	....	....	....	....	1,400
Mexican (g. s.), Nev	.44	....	.54	.20	.75	.53	.63	.40	.50	.34	.30	....	13,000
Miami, Colo	.36	.28	.40	.34	.41	.37	.41	.40	.42	.37	40	.37	228,600
Mollie Gibson (s.), Colo	.77	.35	.32	.18	.27	.21	.25	.19	.23	.18	.25	.18	66,770
Moulton (s. g.), Mont	.25	....	....	....	....	....	....	....	....	....	....	....	125
Mt. Rosa (g.), Colo	.10	.07	.10	.07	.11	.08	.10	.08	.09	.09	.15	.09	128,850
New Haven (g.), Colo	.03	.02	.02	.01	.02	.01	....	....	....	....	....	....	196,101
North Star (g.), Cal	....	....	....	....	....	....	....	....	....	....	5.50	....	575
Occidental Cons. (g. s.), Nev	....	....	....	....	2.25	....	....	....	....	....	....	....	400
Old Dominion (c.), Ariz	20.00	....	....	....	....	....	....	....	....	....	....	....	1,700
Old Gold (g.), Colo	....	....	....	....	....	....	.009	.006	.007	....	.008	.006	33,000
Ontario (s. l.), Utah	8.00	5.50	7.00	3.00	5.50	3.00	4.50	....	7.00	3.25	4.13	4.00	3.718
Ophir (g. s.), Nev	.95	.90	.80	.60	1.05	....	.88	....	.83	....	.70	.55	7.080
People's (g.), Colo	....	....	....	....	....	....	....	....	....	....	....	....	5,200
Pharmacist (g.), Colo	.16	.09	.10	.05	.10	.08	.12	.09	.10	.06	.09	.06	270.710
Phœnix Cons. (g.), Ariz	.09	.07	.07	.05	.06	.05	.05	....	.04	....	.12	.04	106,020
Plymouth (g.), Cal	.20	....	....	....	.16	.12	....	....	.11	.09	.10	....	7.200
Portland (g.), Colo	.81	.68	....	....	.80	.57	1.30	.70	.75	.65	.73	.62	31,650
Potosi (g. s.), Nev	.50	.40	....	....	.58	.50	.50	.45	.65	....	.47	....	5,800
Quicksilver (q.), Cal. (com.)	2.50	1.00	4.13	3.50	4.00	2.88	3.50	1.00	3.00	1.00	3.50	1.00	5.850
Quicksilver (q.), Cal. (pref.)	8.00	7.00	11.88	11.00	12.00	8.00	11.00	7.00	11.00	8.00	11.00	....	2.865
Red Bird (g.), Colo	....	....	....	....	....	....	....	....	....	....	....	....	67,190
Red Mountain (g.), Colo	.20	.10	.20	.10	.20	.10	.17	.10	....	....	.14	.11	124,000
Rocky Mountain (g.), Colo	....	....	.12	.09	.16	.13	.17	.14	.14	.10	.16	.14	524,300

FLUCTUATIONS IN THE PRICES OF STOCKS AT NEW YORK DURING 1897.—*Continued.*

Name and Location of Company.	Par Value.	January.		February.		March.		April.		May.		June.	
		H.	L.	H.	L.	H.	L.	H.	L.	H.	L.	H.	L.
Russell (g.), N. C	100	.24	.18	.28	.20	.34	.28	.34	.26	.33	.28	.47	.29
Savage (g. s.), Nev	100	.50	.30	.50	.....	.35	.....	.27	.25	.35	.23	.30	.20
Sentinel (g.), Colo	1	.....	.....	.....	.....	.....	.....	.....	.....	.....	.....	.....	.....
Sierra Nevada (g. s.), Nev	100	.55	.45	.40	.35	.35	.20	.20	.....	.60	.50	.80	.25
Small Hopes (s. l.), Colo	20	.60	.....	.60	.52	.55	.50	.....	.....	.....	.....	.60	.....
Specimen (g.), Colo	1	.06	.....	.07	.06	.08	.06	.....	.....	.03	.03	.04	.02
Standard Cons. (g. s.), Cal	100	1.75	1.45	1.75	1.65	1.80	1.60	1.75	1.65	1.60	1.50	1.50	1.30
St. Francis Cariboo (g.), British Col	5	.....	.....	.....	.....	.....	.....	.....	.....	.....	.....	.....	.....
Syndicate (g.), Cal	100	.06	.04	.05	.04	.04	.....	.....	.....	.....	.....	.....	.....
Union (g.), Colo	1	.....	.....	.....	.....	.26	.19	.....	.....	.11	.10	.16	.08
Union Cons. (g. s.), Nev	100	.45	.....	.35	.25	.30	.....	.30	.....	.30	.....	.41	.25
Utah Cons. (s.), Nev	100	.....	.....	.....	.....	.....	.....	.....	.....	.....	.....	.05	.....
Victor (g.), Colo	5	4.00	.....	.....	.....	.....	.....	.....	.....	.....	.....	2.88	2.00
Waldorf (g.), Colo	1	.....	.....	.....	.....	.....	.....	.....	.....	.....	.....	.....	.....
Work (g.), Colo	1	.08	.07	.10	.08	.09	.07	.07	.04	.07	.03	.06	.04
Yellow Jacket (g. s.), Nev	100	.40	.37	.33	.25	.36	.25	.31	.26	.....	.....	.35	.23
Yukon, Can	1	.....	.....	.....	.....	.....	.....	.....	.....	.....	.....	.....	.....

Juniata of Aspen, Colo., Deadwood-Terra, Elkton, Gold Coin, Golden Fleece, Homestake, Horn Silver, Japan, Mollie Gibson, Miami, Ontario, Portland, Quicksilver, Specimen, and Standard.

Of the high-priced stocks the most noteworthy features were the decline in the value of Ontario from $11 at the beginning of the year to $3 toward the end,

FLUCTUATIONS OF MINING STOCKS AT SAN FRANCISCO DURING 1897.

Name and Location of Company.	Par Value.	January.		February.		March.		April.		May.		June.	
		H.	L.	H.	L.	H.	L.	H.	L.	H.	L.	H.	L.
Alpha Cons., Nev	$1.00	.18	.10	.11	.05	.10	.08	.12	.04	.11	.05	.13	.02
Alta, Nev	1.00	.10	.03	.07	.03	.05	.01	.10	.01	.08	.02	.08	.01
Andes, Nev	1.00	.20	.08	.15	.10	.21	.09	.26	.17	.27	.17	.19	.12
Belcher, Nev	1.00	.56	.33	.30	.20	.23	.10	.42	.18	.40	.18	.24	.15
Benton Cons., Nev	1.00	.17	.05	.20	.13	.16	.10	.16	.13	.10	.09	.14	.09
Best & Belcher, Nev	1.00	.88	.49	.83	.57	.81	.58	.76	.58	.78	.51	.60	.38
Bullion, Nev	1.00	.10	.04	.14	.03	.12	.09	.13	.07	.10	.01	.14	.08
Caledonia, Nev	1.00	.14	.10	.14	.06	.13	.08	.14	.10	.15	.06	.11	.07
Challenge Cons., Nev	1.00	.86	.44	.53	.34	.41	.29	.39	.21	.38	.21	.48	.21
Chollar, Nev	1.00	1.15	.78	1.00	.53	1.25	.85	1.35	.88	1.25	.58	1.45	.72
Confidence, Nev	1.00	1.50	1.00	1.15	.82	1.05	.70	1.20	.80	1.40	.95	1.25	.85
Cons. California & Virginia, Nev	1.00	2.50	1.00	2.20	1.85	2.05	1.05	1.85	1.10	2.65	1.60	1.90	1.30
Cons. Imperial, Nev	1.00	.03	.01	.02	.01	.03	.01	.03	.01	.02	.01	.02	.01
Cons. New York, Nev	1.00	.03	.....	.03	.02	.02	.01	.03	.01	.03	.02	.02	.....
Crown Point, Nev	1.00	.48	.22	.31	.19	.23	.12	.36	.12	.37	.20	.26	.16
Eureka Cons., Nev	1.00	.25	.20	.40	.20	.35	.20	.30	.....	.30	.....	.30	.....
Exchequer, Nev	1.00	.07	.04	.05	.02	.05	.02	.05	.02	.04	.01	.04	.01
Gould & Curry, Nev	1.00	.57	.25	.48	.33	.40	.23	.40	.24	.36	.16	.40	.30
Hale & Norcross, Nev	1.00	1.45	.76	1.30	1.00	1.10	.78	.98	.88	1.00	.73	.90	.70
Julia Cons., Nev	1.00	.07	.03	.06	.02	.06	.04	.05	.03	.05	.04	.06	.02
Justice, Nev	1.00	.06	.04	.....	.....	.06	.03	.05	.03	.04	.01	.09	.02
Kentuck Cons., Nev	1.00	.05	.02	.04	.01	07	.01	.07	.03	.06	.04	.06	.03
Lady Washington, Nev	1.00	.03	.02	.02	.01	.....	.....	.....	.....	.....	.....	.....	.....
Mexican, Nev	1.00	.55	.41	.45	.31	.36	.18	.52	.22	.56	.30	.38	.24
Nevada Queen, Nev	1.00	.04	.....	.....	.....	.14	.04	.06	.....	.06	....	.06	.05
North Gould & Curry, Nev	1.00	.....	.....	.35	.24	.26	.....	.06	.....	.11	.10	.08	....
Occidental Cons., Nev	1.00	.26	.16	.15	.06	.17	.04	.23	.11	.20	.08	.21	.04
Ophir, Nev	1.00	1.35	.93	.96	.75	.96	.61	1.20	.87	1.25	.82	.92	.61
Overman, Nev	1.00	.19	.12	.13	.06	.10	.05	.10	.05	.15	.03	.14	.09
Potosi, Nev	1.00	.75	.50	.52	.38	.44	.28	.71	.31	.70	.37	.72	.36
St. Louis, Nev	1.00	.....	.....	.....	.....	.....	.....	.....	.....	.....	.....	.....	.....
Savage, Nev	1.00	.52	.22	.48	.37	.38	28	.32	.17	.39	.10	.35	.22
Scorpion, Nev	1.00	.05	.02	.04	.02	.04	.....	.04	.....	.04	.....	.05	.03
Seg. Belcher & Mides, Nev	1.00	.13	.09	.10	.04	.06	.02	.06	.01	.12	.02	.10	.05
Sierra Nevada, Nev	1.00	.56	.40	.42	.33	.34	.20	.58	.22	.60	.36	.93	.32
Silver Hill, Nev	1.00	.02	.01	.02	.01	.02	.01	.03	.01	.03	.01	.02	.01
Standard Con., Cal	1.00	1.70	1.25	1.75	1.50	1.70	1.55	1.70	1.55	1.60	1.40	1.50	1.20
Syndicate, Cal	1.00	.04	.02	.04	.02	.04	.02	.03	.02	.03	.01	.03	.01
Union Cons, Nev	1.00	.51	.38	.41	.32	.35	.24	.39	.20	.42	.17	.47	.26
Utah Cons., Nev	1.00	.08	.04	.08	.02	.07	.05	.09	.05	.07	.02	.08	.02
Yellow Jacket, Nev	1.00	.42	.32	.32	.21	.31	.21	.32	.24	.34	.25	.55	.15

FLUCTUATIONS IN THE PRICES OF STOCKS AT NEW YORK DURING 1897.—*Continued.*

Name and Location of Company.	July.		August.		Sept.		October.		Nov.		Dec.		Sales.
	H.	L.	H.	L.	H.	L.	H.	L.	H.	L.	H.	L.	
Russell (g.), N. C.	.55	.49	.....	.....	.....	.....	.....	.....	.....	.....	.....	.....	730,800
Savage (g. s.), Nev	.33	.....	.31	.30	.75	.25	.55	.40	.34	.....	.27	.....	7,700
Sentinel (g.), Colo.	.....	.....	.....	.....	.....	.....	.004	.002	.003	.002	.005	.002	658,100
Sierra Nevada (g. s.), Nev.	1.60	.78	1.20	.65	1.20	.75	1.30	1.25	.63	.59	.....	.....	13,150
Small Hopes (s. l.), Colo.	.....	.....	.65	.60	.....	.....	.50	.....	.....	.....	.....	.....	4,008
Specimen (g.), Colo.	.04	.02	.08	.02	.05	.02	.04	.04	.04	.04	.05	.03	126,200
Standard Cons. (g. s.), Cal.	1.60	1.55	1.80	1.65	2.00	.....	1.80	1.60	1.75	1.70	1.70	1.65	22,549
St. Francis Cariboo (g.), Brit. Col.	.....	.....	.....	.....	.....	.....	.....	.....	.....	.....	3.00	2.50	740
Syndicate (g.), Cal	.....	.....	.06	.....	.06	.05	.05	.....	.....	.....	.06	.05	25,200
Union (g.), Colo.	.17	.14	.25	.17	.22	.19	.19	.18	.16	.12	.13	.11	71,150
Union Cons. (g. s.), Nev.	.50	.40	.45	.....	.50	.24	.....	.....	.40	.20	.....	.....	7,100
Utah Cons. (s.), Nev.	.....	.....	.12	.09	.....	.....	.....	.....	.15	.10	.10	.....	2,600
Victor (g.) Colo.	2.50	.....	.....	.....	.....	.....	.....	.....	.....	.....	.....	.....	100
Waldorf (g.), Colo.	.....	.....	.....	.....	.11	.06	.13	.11	.13	.10	.18	.11	276,800
Work (g.), Colo.	.06	.10	.06	.04	.06	.05	.06	.03	.05	.03	.06	.04	503,300
Yellow Jacket (g. s.), Nev.	.60	.32	.42	.30	.57	.30	.80	.54	.43	.28	.30	.....	25,750
Yukon, Can.	.....	.....	.....	.....	.27	.18	.27	.11	.13	.10	.13	.08	218,700
Total shares sold	.....	.....	.....	.....	.....	.....	.....	.....	.....	.....	.....	.....	12,429,967

owing to the suspension of operations during the summer. Not much of the stock came out, however. In Daly there was only one transaction and that in January, so there was no indication of the effect of the suspension upon its market value. Homestake was quoted as high as $40 and as low as $30, but we

FLUCTUATIONS OF MINING STOCKS AT SAN FRANCISCO DURING 1897.—*Continued.*

Name and Location of Company.	July.		August.		September.		October.		November.		December.	
	H.	L.	H.	L.	H.	L.	H.	L.	H.	L.	H.	L.
Alpha Cons., Nev	.20	.09	.20	.06	.28	.16	.23	.08	.15	.07	.18	.06
Alta, Nev	.08	.04	.19	.04	.21	.08	.29	.10	.16	.07	.14	.02
Andes, Nev	.18	.07	.20	.15	.29	.14	.35	.25	.34	.18	.19	.14
Belcher, Nev	.31	.15	.41	.18	.55	.37	2.10	.40	.51	.18	.37	.13
Benton Cons., Nev	.15	.04	.30	.25	.....	.....	1.00	.90	.50	.....	.....	...
Best & Belcher, Nev	.52	.38	.76	.62	.97	.75	.84	.43	.49	.28	.54	.38
Bullion, Nev	.11	.07	.10	.04	.17	.08	.17	.06	.16	.07	.18	.05
Caledonia, Nev	.10	.07	.26	.07	.27	.20	.55	.19	.26	.15	.25	.15
Challenge Cons., Nev	.45	.36	.41	.29	.60	.30	.75	.34	.44	.22	.31	.23
Chollar, Nev	.86	.70	.80	.65	.88	.69	.77	.53	.64	.31	.56	.32
Confidence, Nev	1.95	1.00	1.05	.85	1.40	.98	1.40	.90	1.00	.77	1.05	.70
Cons. California & Virginia, Nev.	1.55	1.25	1.30	1.10	1.90	1.25	1.70	1.15	1.30	1.05	1.35	1.00
Cons. Imperial, Nev	.02	.01	.03	.01	.05	.02	.04	.01	.03	.01	.02	.01
Cons. New York, Nev	.02	.....	.03	.....	.06	.03	.03	.01	.04	.02	.03	.01
Crown Point, Nev	.29	.16	.38	.17	.50	.32	1.40	.33	.40	.15	.31	.10
Eureka Cons., Nev	.30	.15	.25	.15	.....	.....	.20	.....	.25	.20	.25	.20
Exchequer, Nev	.03	.01	.05	.01	.10	.05	.08	.02	.04	.01	.06	.01
Gould & Curry, Nev.	.54	.31	.52	.35	.85	.49	.70	.30	.36	.18	.45	.28
Hale & Norcross, Nev	1.00	.79	1.10	.82	1.85	.98	1.40	1.10	1.75	1.30	1.65	1.20
Julia Cons., Nev	.05	.03	.06	.03	.06	.04	.05	.01	.04	.01	.03	.01
Justice, Nev	.06	.04	.12	.03	.26	.08	.49	.25	.62	.20	.64	.32
Kentuck Cons., Nev	.07	.04	.07	.03	.14	.05	.11	.08	.06	.01	.06	.03
Lady Washington, Nev	.....	.....	.....	.....	.....	.....	.06	.01	.03	.01	.03	.02
Mexican, Nev	.45	.30	.49	.20	.75	.48	.64	.40	.46	.28	.44	.23
Nevada Queen, Nev	.06	.....	.....	.....	.....	.....	.05	.....	.....	.....	.....	.....
North Gould & Curry, Nev	.14	.13	.25	.15	.26	.....	.25	.15	.20	.15	.21	.16
Occidental Cons., Nev	.19	.08	.....	.....	2.50	.93	1.75	1.10	1.95	1.10	1.80	1.20
Ophir, Nev	.86	.61	.70	.58	1.35	.63	1.25	.83	1.00	.70	.85	.60
Overman, Nev	.12	.08	.14	.04	.39	.12	.29	.12	.15	.06	.12	.03
Potosi, Nev	.52	.36	.41	.28	.57	.35	.83	.39	.72	.40	.48	.35
St. Louis, Nev	.....	.....	.11	.09	.25	.14	.24	.15	.....	.....	.....	.....
Savage, Nev	.39	.21	.83	.25	.75	.29	.63	.40	.48	.25	.38	.19
Scorpion, Nev	.06	.04	.06	.04	.09	.04	1.08	.04	.05	.03	.06	.01
Seg. Belcher & Mides, Nev	.08	.02	.14	.03	.20	.09	.24	.07	.13	06	.12	.05
Sierra Nevada, Nev	1.75	.75	1.25	.53	1.25	.67	1.25	.71	.80	.54	.81	.48
Silver Hill, Nev	.03	.01	.02	.01	.07	.02	.09	.03	.10	.01	.08	.02
Standard Con., Cal	1.70	1.45	2.00	1.60	2.00	1.85	.90	1.60	1.70	1.45	1.65	1.45
Syndicate, Cal	.03	.01	.....	.....	.05	.....	.....	.....	.....	.....	.....	.....
Union Cons., Nev	.60	.37	.50	.34	.77	.41	.66	.40	.46	.23	.36	.20
Utah Cons., Nev	.09	.04	.19	.05	.34	.16	.30	.10	.15	.05	.12	.03
Yellow Jacket, Nev	.57	.47	.52	.30	.57	.31	1.00	.41	.52	.30	.42	.29

PRICES OF INDUSTRIAL AND COAL STOCKS DURING 1897.

Name of Company.	Par Value.	January.		February.		March.		April.		May.		June.	
		H.	L.	H.	L.	H.	L.	H.	L.	H.	L.	H.	L.
American Coal	$25	......	......	......	......	......	......	......	......	125.00	110.00	125.00	110.00
Cambria Iron	50	45.50	42.50	44.00	39.75	42.00	37.50	38.00	30.18	32.00	30.75	36.00	30.75
Choctaw & Gulf Certificates	50	8.25	7.50	8.38	7.50	8.25	7.00	7.25	6.50	6.88	6.00	8.00	6.75
Colorado Coal & Iron Dev	100	......	......	......	......	......	......	......	......	.50	.38	1.50	1.00
Colorado Fuel & Iron	100	27.00	23.00	26.25	20.50	23.00	17.00	18.00	16.00	17.13	15.75	20.50	15.25
Col., H.C.& Iron	100	......	......	......	......	......	......	......	......	5.00	3.50	5.00	3.25
Consolidated Coal	100	......	......	......	......	......	......	......	......	38.00	36.00	38.00	......
Edison E. I. of B	100	......	......	......	......	......	......	......	......	108.00	101.00	109.25	106.00
Edison E. I.N.Y	100	......	......	......	......	......	......	......	......	116.50	106.00	117.50	115.00
General Electric	100	35.88	32.50	36.50	33.25	36.18	30.50	32.13	30.00	31.88	28.63	35.00	30.88
H. & Broad Top	50	23.00	19.50	19.50	17.38	19.00	17.50	17.25	17.00	......	......	15.50	11.75
H. & Broad Top, pref	50	52.00	48.50	48.25	45.00	50.00	46.00	50.00	49.00	49.00	47.75	48.00	47.50
Illinois Steel	100	......	......	......	......	......	......	......	......	35.00	32.00	40.00	33.75
Maryland Coal, pref	100	......	......	......	......	......	......	......	......	60.00	40.00	60.00	40.00
Minnesota Iron	100	......	......	......	......	......	......	......	......	49.00	43.00	51.00	45.00
National Lead	100	26.38	22.00	25.38	21.88	25.88	22.18	24.00	22.50	27.25	22.50	31.38	26.50
National Lead, pref	100	93.25	88.00	92.00	87.25	92.00	90.00	......	......	94.50	90.00	......	......
New Central Coal	100	......	......	......	......	......	......	......	......	6.00	4.00	7.00	4.00
Pennsylvania Coal	100	......	......	......	......	......	......	......	......	340.00	310.00	325.00	320.00
Pennsylvania Salt	50	100.50	100.00	......	......	......	......	......	......	......	......	102.00	101.50
Pennsylvania Steel	50	31.50	29.50	29.00	28.00	25.00	22.50	20.00	......	20.00	......	29.50	25.00
Pennsylvania Steel, pref	50	52.00	50.25	......	......	......	......	40.00	......	40.00	......	50.00	......
Standard Oil	100	......	......	......	......	......	......	......	......	318.00	294.50	325.50	294.50
Tennessee Coal & Iron	100	31.00	25.25	30.88	25.00	29.25	24.00	26.25	19.50	20.88	17.00	25.88	18.50
United Gas Imp	50	73.50	71.00	75.00	72.00	74.25	72.50	72.50	71.00	72.63	70.88	75.00	72.38
Welsbach. Can	5	2.25	1.88	2.18	1.88	1.88	......	1.50	1.25	1.75	1.38	1.75	1.50
Welsbach, com	100	23.00	22.00	23.50	......	20.00	16.00	18.00	13.00	18.00	15.00	25.00	19.00
Welsbach, pref	100	67.00	62.00	66.50	65.00	65.00	59.50	61.25	58.00	61.50	......	69.50	62.00
Welsbach Light	5	47.00	42.00	47.00	40.00	44.00	40.13	45.00	38.50	40.75	39.50	49.00	40.75
Westmoreland Coal	50	48.25	48.00	49.00	......	51.00	......	49.50	......	50.00	49.50	50.00	49.00
Worth, pref	100	......	......	......	......	......	......	......	......	79.00	76.00	79.00	76.00

fancy that very little was sold at the latter figure, and since January 1, 1898, the quotations have been considerably over $40. This stock is very closely held and it is only occasional small lots that appear on the market. The company is paying increased dividends and its ore reserves are known to be large.

The transactions in Comstock shares on the New York exchange were comparatively insignificant. There is very little interest in these shares in New York and quotations follow those of the San Francisco exchange. The Colorado stocks, especially those of Cripple Creek, commanded the most attention. Among these there are several dividend payers. The amounts distributed by them may be found in the general table on a subsequent page.

SAN FRANCISCO STOCK MARKET IN 1897.

The San Francisco stock market was almost dead in 1897, the exchange having been deserted by the heaviest class of dealers, leaving only the small fry to struggle against the lack of interest on the part of the public. There was a mild excitement during the summer caused by a boom in Occidental which rose from $0.10 to $3 per share on the strength of a strike of fair grade of ore in the 550 ft. level; but the speculators in Pine Street no longer have the nerve of those of former days, and the fall was as rapid as the rise. Altogether 1897 was the most uneventful year in the history of the San Francisco exchange.

SALT LAKE MINING STOCK MARKET IN 1897.

Last year was unfortunate for the Utah mining stocks, owing chiefly to the heavy decline in the value of silver, which caused a falling off in the dividend

PRICES OF INDUSTRIAL AND COAL STOCKS DURING 1897.—*Continued.*

Name of Company.	July.		August.		September.		October.		November.		December.		Sales.
	H.	L.	H.	L.	H.	L.	H.	L.	H.	L.	H.	L.	
American Coal	125.00	110.00	120.00	119.00	146.00	120.00	140.00	119.00	140.00	119.00	140.00	119.00	....
Cambria Iron	38.00	33.00	44.25	36.00	44.25	38.00	40.75	35.50	39.00	35.75	40.50	36.75	20,738
Choctaw & Gulf Certif's	9.38	7.50	9.88	8.63	10.25	9.13	9.50	8.00	8.25	7.00	9.88	8.00	56,366
Colorado Coal & Iron Dev.	1.00	.25	2.00	1.25	1.50	.75	1.00	.50	1.00	.25	1.00	.50	2,084
Colorado Fuel & Iron	20.00	15.25	22.00	17.50	27.88	23.00	25.50	21.75	22.00	19.75	24.00	21.25	119,437
Col., H. C. & Iron	5.00	3.50	7.50	5.00	7.38	6.00	6.75	5.75	6.00	4.50	5.75	4.75	11,240
Consolidated Coal	38.00	......	40.00	38.00	50.00	38.00	38.00	......	38.00	......	39.75	......	....
Edison E. I. of B.	110.00	107.00	117.00	115.00	117.00	115.00	110.00	105.00	110.00	105.00	110.00	105.00	1,925
Edison E. I. N. Y.	122.25	113.00	125.25	121.00	132.50	123.00	127.00	123.00	125.00	121.00	125.00	122.00	10,671
General Electric	36.13	33.13	38.38	35.00	41.38	25.63	33.25	32.50	33.63	31.00	34.50	33.00	668,308
H. & Broad Top	......	......	15.00	12.13	18.00	15.00	17.50	16.00	......	......	......	......	1,175
H. & Broad Top, pref.	46.00	44.50	44.75	44.00	48.50	44.13	47.00	45.00	46.00	45.00	45.00	40.00	2,821
Illinois Steel	......	......	50.00	36.50	50.00	44.00	48.50	41.75	43.25	37.50	48.00	41.00	99,333
Maryland Coal, pref.	60.00	40.00	60.00	40.00	60.00	45.00	55.00	40.00	50.00	40.00	55.00	41.00	881
Minnesota Iron	59.00	50.00	60.00	57.00	60.00	57.75	60.00	40.00	60.00	55.50	59.88	45.00	28,974
National Lead	35.88	29.25	37.38	34.00	40.00	36.50	44.00	32.50	35.25	31.50	35.88	34.25	463,095
National Lead, pref.	......	......	......	......	......	......	......	......	......	......	......	......	9,705
New Central Coal	8.00	5.50	9.00	4.00	9.00	7.00	9.00	6.00	8.00	4.00	8.00	6.00	1,300
Pennsylvania Coal	325.00	320.00	370.00	320.00	375.00	114.25	375.00	340.00	370.00	325.00	375.00	330.00	6,446
Pennsylvania Salt	......	......	......	......	......	......	......	......	103.75	101.00	103.00	......	99
Pennsylvania Steel	27.00	24.00	34.50	26.00	33.50	30.00	29.50	10.00	12.00	6.00	11.00	6.00	14,562
Pennsylvania Steel, pref.	......	......	57.00	26.00	57.00	49.50	49.00	22.00	21.00	11.00	17.00	10.00	8,497
Standard Oil	323.50	307.00	319.00	302.00	354.00	317.00	342.00	333.00	345.00	330.00	336.00	333.00	....
Tennessee Coal & Iron	25.88	23.00	32.50	25.50	35.13	27.88	32.13	25.38	26.25	23.25	26.38	24.75	635,410
United Gas Imp.	74.50	73.25	86.50	75.00	88.25	82.50	88.00	82.50	87.88	84.75	98.50	93.00	159,695
Welsbach, Can.	1.75	1.50	2.50	1.88	2.38	2.00	2.00	1.50	1.75	1.50	1.63	1.38	15,204
Welsbach, com.	21.00	......	24.00	22.00	22.00	15.50	19.00	16.00	15.00	......	14.25	12.00	3,586
Welsbach, pref.	69.75	67.00	79.00	69.88	72.00	69.00	69.00	65.25	66.00	65.00	66.00	62.00	4,687
Welsbach Light	47.05	44.88	49.75	48.00	50.25	46.50	48.50	42.50	45.00	42.50	44.50	41.50	28,988
Westmoreland Coal	50.00	49.50	50.00	......	50.00	48.50	49.00	48.50	50.00	48.50	49.00	......	661
Worth, pref.	85.00	77.00	93.00	82.00	95.00	90.00	95.00	85.00	87.00	85.00	87.00	80.00	....
Total sales	......	......	......	......	......	......	......	......	......	......	......	......	,368,8882

record of $479,000 as compared with the previous year. Centennial-Eureka and Bullion-Beck & Champion each suspended dividends in April. Ontario and Daly shares fell heavily upon the closing of the mines in August. The price of Silver King, however, was well maintained and the company had a prosperous year. Of the Mercur stocks the Mercur and Geyser-Marion remained fairly steady. The former company is reported to be in excellent condition.

UTAH MINING SHARES IN 1897.

Stocks.	Jan. 1.	Feb. 1.	Mar. 1.	Apr. 1.	May 1.	Jun. 1.	July 1.	Aug. 1.	Sep. 1.	Oct. 1.	Nov. 1.	Dec. 1.
Ajax	.81	.80	.75	.63	.66	.50	.40	.28	.30	.24	.24	.26
Anchor	1.20	1.25	1.09	1.00	1.25	.80	.60	....	....	.50	.50	.65
Bullion-Beck & Champion	6.95	7.50	9.55	7.05	6.75	5.00	5.25	5.40	3.00	2.75	3.80	5.65
Centennial-Eureka	65.00	65.00	65.05	47.50	40.05	35.00	34.00	31.00	24.00	20.00	18.00	21.00
Dalton & Lark	.20	.00	.15	.16	.15	.10	.09	.09	....	.06	.08	.05
Daly	5.00	5.20	5.23	4.25	3.79	3.25	2.50	1.50	.95	.95	.95	....
Daly West	8.00	7.95	7.95	7.75	7.50	7.25	6.00	3.00	2.75	2.50	2.50	4.00
Dexter	....	....	.95	1.75	1.70	1.70	1.75	1.70	1.40	1.53	1.35	1.54
Four Aces	.19	.14	.10	.11	.00	.08	.05	.05	....	.00	.02	.02
Galena	1.40	1.15	1.10	1.00	.90	.85	.85	.80	....	.50	.55	.65
Geyser-Marion	.80	1.00	1.40	1.35	1.30	1.32	1.27	1.20	1.15	1.07	1.07	.93
Horn Silver	1.50	1.40	1.80	1.65	1.50	1.54	....	....	....	.90	1.25	1.50
Mammoth	2.35	1.90	2.10	1.55	1.52	1.45	1.30	1.30	.85	1.00	1.38	2.27
Mercur	7.05	7.10	6.75	7.38	7.30	7.50	7.75	7.90	7.70	7.55	7.50	8.25
Northern Light	.68	.95	.85	.70	.90	.90	.85	.82	.57	.61	.48	.52
Ontario	9.40	9.50	10.25	8.40	8.25	6.70	6.25	3.00	3.00	3.00	3.75	3.85
Silver King	16.50	16.50	17.00	16.08	14.00	14.00	12.00	12.50	12.00	15.00	14.40	15.50
Sunshine	.70	.80	.65	.20	.30	.28	.25	....	.05	.20	.20	.13
Swansea	3.00	1.70	2.00	2.20	2.40	2.00	2.20	1.90	1.20	1.20	1.45	2.20
South Swansea	2.00	1.45	1.75	1.60	1.70	1.00	....	1.50	1.25	.95	1.10	1.47
Utah	1.00	.90	1.15	1.00	1.10	1.04	.75	.62	....	.45	.45	.68

NOTE.—In this table is given the closing bid quotation on the first day of each month for the more active shares. As near as may be, this affords the best index of the Salt Lake market, and generally is but a small shade below what the shares can be bought for.

FLUCTUATIONS OF MINING STOCKS IN LONDON IN 1897.

Company.	Location.	Shares Issued.	Par Value.	Opening.	Highest.	Lowest.	Closing.
North Americans:			£ s. d.	£ s. d.	£ s. d.	£ s. d.	£ s. d.
Alaska-Mexican, g	Alaska	780,000	1 0 0	1 7 6	1 15 0	1 0 0	1 7 6
Alaska-Treadwell, g	Alaska	200,000	5 0 0	4 10 0	5 17 6	3 17 6	5 7 6
Anaconda, c. s	Montana	1,200,000	5 0 0	6 0 0	6 16 3	5 0 0	5 1 3
Cariboo Goldf., g. (pref.)	British Col.	70,452	1 0 0	1 0 0	1 2 6	15 0	1 0 0
Chiapas, g. s. c	Mexico	211,510	1 0 0	7 0	7 0	5 0	7 0
De Lamar, g. s	Idaho	400,000	1 0 0	15 0	8 0	2 6	3 3
Doric, g	Colorado	402,007	5 0	5 6	7 6	2 0	3 6
Elkhorn Priority, s. (new)	Colorado	87,500	1 0 0	7 6	17 6	5 0	10 0
Golden Feather, g	California	200,000	1 0 0	4 6	10 0	6	1 0
Golden Gate, g	California	79,600	1 0 0	3 0	3 6	2 6	3 0
Golden Leaf, g	Montana	800,259	1 0 0	1 0	1 3	3	9
Grand Central, g. s	Mexico	250,000	1 0 0	12 6	2 2 6	8 9	1 15 0
Hall Mines, c. s	British Col.	168,270	1 0 0	1 8 9	1 18 9	1 0 0	1 13 9
Lillooet F. R. & Car., g	British Col.	250,000	1 0 0	1 18 9	1 18 9	5 0	15 0
Montana, g. s	Montana	657,128	1 0 0	4 0	5 6	2 6	5 0
Palmarejo, g. s	Mexico	300,487	1 0 0	1 3	2 0	3	6
Plumas-Eureka, g	California	140,625	2 0 0	7 6	7 6	1 3	5 0
Richmond, g. s. l	Nevada	54,000	5 0 0	16 3	17 6	5 0	10 0
Sierra Buttes, g	California	122,500	2 0 0	7 6	7 6	1 0	3 9
South Americans:							
Central Chile, c	Chile	225,000	1 0 0	6 3	10 0	1 3	5 0
Colombian Hydraulic, g	Colombia	75,000	1 0 0	10 0	11 3	2 6	7 6
Copiapo, c	Chile	100,000	2 0 0	2 0 0	2 7 6	1 12 6	2 2 6
Frontino & Bolivia, g	Colombia	128,662	1 0 0	1 12 6	2 7 6	1 2 6	2 5 0
Santa Anna, g	Brazil	150,000	1 0 0	3 0	6 6	2 0	6 0
St. John del Rey, g	Brazil	425,480	1 0 0	16 3	1 2 6	12 6	18 0
Tolima A, s. g	Colombia	14,000	5 0 0	5 10 0	5 15 0	2 5 0	2 15 0
Tolima B, s. g	Colombia	6,000	5 0 0	4 5 0	4 15 0	2 0 0	2 10 0
European:							
Libiola, c	Italy	50,400	5 0 0	1 17 6	2 10 0	1 12 6	2 7 6
Mason & Barry, c. sul	Portugal	185,172	3 0 0	2 10 0	3 6 3	2 5 0	3 1 3
Rio Tinto, c	Spain	162,500	5 0 0	25 1 3	27 10 0	19 7 6	24 17 6
Rio Tinto, c. (pref)	Spain	162,500	5 0 0	6 1 3	6 3 9	5 17 6	6 1 3
Tharsis, c	Spain	625,000	2 0 0	6 2 6	7 0 0	5 12 6	6 17 6
Australians:							
Bayley's United, g	W. Austral.	617,744	5 0	4 0	5 6	1 9	4 9
Broken Hill Prop'r, s	N. S. Wales.	960,000	8 0	2 11 3	2 16 3	2 0 0	2 3 9
Great Boulder, g. (old)	W. Austral.	160,000	1 0 0	8 5 0	11 12 6	6 15 0	6 6 3
Harquahala, g. s	W. Austral.	290,000	1 0 0	2 0	3 0	6	1 3
Hauraki, g. s	N. Zealand.	820,000	2 6	16 6	17 6	4 6	6 6
Kapanga, g	N. Zealand.	250,000	1 0 0	10 6	11 0	4 6	4 6
Lake View Consols, g	W. Austral.	250,000	1 0 0	7 3 9	12 12 6	6 3 9	10 15 0
Menzies Gold Reef, g	W. Austral.	178,811	1 0 0	18 9	16 3	3 9	7 6
Mt. Lyell Min. & R., i. c	Tasmania	211,100	3 0 0	8 12 6	16 5 0	7 2 6	14 15 0
Mt. Morgan, g	Queensland	1,000,000	1 0 0	3 11 3	4 2 6	3 5 0	4 1 3
Waihi, g. (old)	N. Zealand.	160,000	1 0 0	7 2 6	8 12 6	4 7 6	4 13 9
Waitekauri, g	N. Zealand.	143,000	1 0 0	4 7 6	4 10 0	1 17 6	1 17 6
Wentworth, g. s	N. S. Wales.	500,000	1 0 0	12 6	15 0	7 6	11 3
White Feather Rew, g	W. Austral.	75,000	1 0 0	1 15 0	1 15 0	6 3	6 3
Indians:							
Champion Reef, g	ColarFields	440,000	10 0	8 11 3	8 13 9	4 2 6	5 0 0
Coromandel, g	ColarFields	120,000	1 0 0	2 6 3	4 1 3	2 6 3	3 11 3
Mysore, g	ColarFields	500,000	10 0	9 0 0	5 16 3	4 2 6	5 3 9
Nundydroog, g	ColarFields	200,000	1 0 0	3 16 3	4 11 3	3 6 3	4 8 9
Ooregum, g	ColarFields	145,000	1 0 0	3 2 6	3 17 6	2 10 0	2 18 9
Ooregum, g. (pref)	ColarFields	108,191	1 0 0	3 12 6	4 8 9	3 0 0	3 8 9
South Africans:							
British S. Africa, lands	So. Africa	3,500,000	1 0 0	2 12 6	4 6 3	1 16 3	2 15 0
Cape Copper, c	So. Africa	300,000	2 0 0	2 8 9	3 18 9	2 3 9	3 18 9
City & Suburban, g	Transvaal	340,000	4 0 0	4 5 0	6 5 0	2 15 0	6 2 6
Con. Deep Level, g	Transvaal	187,250	1 0 0	4 10 0	5 0 0	2 15 0	5 0 0
Crown Reef, g	Transvaal	120,000	1 0 0	10 7 6	12 15 0	8 7 6	12 2 6
De Beers Con., d	Cape Col'y.	790,000	5 0 0	28 17 6	30 0 0	26 3 9	28 18 9
Durban Roodepoort, g	Transvaal	125,000	1 0 0	6 15 0	7 10 0	5 2 6	6 12 6
Ferreira, g	Transvaal	90,000	1 0 0	18 15 0	22 10 0	14 10 0	22 10 0
Geldenhuis Estate, g	Transvaal	200,000	1 0 0	3 7 6	4 17 6	2 2 6	4 6 3
Geldenhuis Main Reef, g	Transvaal	150,000	1 0 0	16 3	1 2 6	10 0	16 3
Goldfields Deep, g	Transvaal	600,000	1 0 0	7 18 9	9 12 6	2 15 0	9 0 0
Henry Nourse, g	Transvaal	125,000	1 0 0	6 10 0	9 7 6	5 0 0	9 7 6
Heriot, g. (new.)	Transvaal	111,864	1 0 0	7 17 6	8 17 6	6 0 0	8 0 0
Jagersfontein, d	OrangeF.S.	200,000	5 0 0	10 3 9	9 18 9	8 0 0	8 7 6
Langlaagte Estate, g	Transvaal	470,000	1 0 0	4 10 0	4 15 0	3 2 6	4 0 0
Matabele Gold Reefs, g	So. Africa	110,000	1 0 0	4 17 6	6 15 0	2 10 0	6 2 6
Namaqua, c	Cape Col'y.	94,331	2 0 0	1 15 0	2 11 3	1 12 6	2 11 3
Primrose, g. (new)	Transvaal	300,000	1 0 0	4 5 0	4 17 6	2 15 0	4 3 9
Rand Mines, g	So. Africa	332,708	1 0 0	25 2 6	32 17 6	15 7 6	32 5 0
Rhodesian Ex., lands	So. Africa	70,607	1 0 0	5 15 0	8 7 6	2 15 0	4 15 0
Robinson, g	Transvaal	550,000	5 0 0	8 10 0	8 15 0	6 10 0	8 5 0
Sheba, g	Transvaal	1,075,000	1 0 0	2 2 6	2 17 6	1 11 3	2 11 3
Simmer & Jack, g. (new)	Transvaal	940,000	5 0 0	4 12 6	5 0 0	2 2 6	3 12 6
Wemmer, g	Transvaal	80,000	1 0 0	7 7 6	9 17 6	5 10 0	9 7 6

Abbreviations: g., gold; s., silver; c., copper; l., lead; sul., sulphur; i., iron; d., diamonds.

DIVIDENDS AND ASSESSMENTS OF AMERICAN MINING COMPANIES.

WE give in the following pages tables showing the dividends paid and assessments levied by American mining companies for a series of years ending with 1897. The tables are as complete as they can be made, but they are necessarily imperfect, because many companies do not make reports, and the facts cannot be ascertained by inquiry. There are many mines also which are operated by private partnerships, and if the profits of these could be given the amount of dividends shown would be very largely increased. With regard to assessments, a few States require the publication of notices by all incorporated companies, but in others no such regulation exists. In many cases companies have willingly aided us and have given all necessary information; if all would do this our work would be very much lightened and our tables made full and complete. The list of dividend-payers has increased during the year and promises to show a continued growth. This table is of especial value in comparison with the quotations for the shares of the various companies which are to be found in the previous pages, showing the rates of interest realized on this class of investment.

DIVIDENDS PAID BY AMERICAN MINES. ($1 — $1000; total, full amount.)

Company.	1888	1889	1890	1891	1892	1893	1894	1895	1896	1897	Totals.
Adams, S., L., Colo				75	8			6			$698,500
Ætna Con., Q., Cal							20	20	40	40	120,000
Alaska-Mexican, G., Alaska							26	80	70	54	227,080
Alaska-Treadwell, G., Alaska (*a*)				450	300	375	375	400	350	225	3,250,000
Alice, S., G., Mont	25	25	95	75						80	1,055,000
Alliance, S., L., Utah										5	5,000
Alma, G., Idaho		15									60,000
Alturas, G., Idaho	113										262,250
Amador Gold, Ltd., G., Cal			31								31,250
American Belle, S., C., Colo				50							50,000
American Coal, Md				90	90	90	90				360,000
Am. Dev. & Mg., G., S., C., Mont							52	24			76,422
American Gold, G., S., L., Colo										42	285,000
American & Nettie, G., Colo		150		45	30						225,000
American Turquoise, T., N. M						60					60,000
Amethyst, G., S., Colo								36			36,000
Anaconda, G., Colo					13						12,500
Anaconda Copper, Mont									2250	3000	5,250,000
Anchoria-Leland, G., Colo									30	72	102,000
Apollo Con., G., Cal										100	100,000
Argentum-Juniata, S., Colo								39			39,000
Argyle, G., Colo					20						20,000
Arizona Copper, C										48	
Aspen, S., L., Colo	80	280	200	100	100	100	40				900,000
Atlantic, C., Mich	120	80	100	40						40	740,000
Aurora, I., Mich				200	100	200			50		700,000
Badger, S., Can			38								37,500
Bald Butte, G., Mont			20	30	20	100	200	128	32	8	512,500
Ballarat Smuggler, G., Colo				6							6,000
Bangkok-Cora Belle, S., Colo		3	42					54	6		107,510
Bannister, S., Mont			24	72	6						102,000
Bates-Hunter, G., Colo				68							67,500
Belden, F. E., M., N. H.					45	60	60	48	4		217,000
Bellevue, S., L., Idaho				13							200,000
Best Friend, S., Colo				70	20						90,000
Big Seven, Cal										8	8,000
Big Six, G., S., Colo									8	5	8,000
Bimetallic, S., G., Mont			290	840	200	190					1,630,000
Boreel, S., Colo						60	23				105,000
Boston & Montana, C., S., Mont	400	500	625	500			275	1050	1500	1800	6,725,000
Brotherton, I., Mich					40	80					120,000
Bull-Domingo, L., S., Colo			20	29	4						53,000
Bullion-Beck & Champion, Utah							425	325	290	170	2,117,000
Bunker Hill & Sullivan, S., L., Ida	20									102	372,000
Buxton, So. Dak					20						25,000
Caledonia, G., So. Dak	16	80	56		56						192,000
California, G., Colo			20								116,500
Calliope, S., Colo		50	85	5							140,000
Calumet & Hecla, C., Mich	2000	2000	2000	2000	2000	2000	1500	2000	2500	5000	50,850,000
Cariboo, G., B. C.								49	76	48	178,965

DIVIDENDS PAID BY AMERICAN MINES—*Continued.*

Company.	1888	1889	1890	1891	1892	1893	1894	1895	1896	1897	Totals.
Carlisle, G., N. M. (*b*)	175										$175,000
Centennial-Eureka, S., G., L., Utah			150	330	90	188	195	510	390	98	2,010,000
Central, C., Mich	70	40	20	20							1,970,000
Central Lead, L., Mo										24	24,000
Champion, G., Cal			27	43	41	41	41	27		51	270,700
Charleston, P., S. C						140				10	150,000
Church, G., Cal								5			5,000
Clay County, G., Colo			8	48							56,000
Cleopatra, G., S., So. Dak						450					450,000
C. O. D., G., Colo								20	5		25,000
Cœur d'Alêne, S., L., Idaho		70	160	80	72	30					340,000
Colorado Central, S., Colo	83	55		14	55	28					502,661
Colorado Fuel and Iron Co., Colo		178	189	252	67	67					752,700
Commodore, Colo										20	120,000
Commonwealth, S., Nev			20								20,000
Confidence, S., Nev	175	25									277,680
Con. Cal. & Va., S., G., Nev. (*c*)	1118	756	162	216			108	108			3,898,800
Con. New York, S., G., Nev						10					10,000
Consolidation Coal. Md					205						205,000
Contention, S., Ariz					50						2,637,500
Cook's Peak, S., L., Colo				55	60						119,532
Copper Bell, S., Mont				14							13,500
Copper Queen, C., S., Ariz	140	70	210		140	300	200	150			1,910,000
Coptis, S., Nev. (*d*)								1			77,000
Coronas, S., G., Mex									5	5	10,000
Cortez, S., Nev			173	250	95	45					735,000
Dalton & Lark, G., S., L., Utah									88		87,500
Daly, S., L., Utah	488	450	450	450	450	188			87	88	2,925,000
Deadwood-Terra, G., So. Dak. (*e*)				50	100				100	80	1,820,000
Deer Creek, S., G., Idaho	10	10									20,000
De Lamar, S., G., Idaho				150	200	450	500	450	500		2,250,000
Della S., Colo							50			10	60,000
Derbec, G., Cal		30	30	20							280,000
Dexter, S., Nev						100					100,000
Dunkin, S., L., Colo	100	40									890,000
Dunstone, G., S., L., Mont	6										6,000
Dutch, Cal										8	22,500
Elkhorn, S., L., Mont			125	300	303	225	142	50			1,265,000
Elkton Con., G., Colo							60		90	260	421,960
El Paso, Colo										5	5,393
Enterprise, S., G., Colo. (*k*)				250	450	125					825,000
Eureka Con., S., L., Nev	88		88	50	13						5,112,500
Evening Star, S., L., Colo	13	25									1,437,500
Florence, S., Mont								85	54	18	107,378
Forepaugh, Colo								16			16,000
Fortuna, G., Mexico										110	150,000
Franklin, C., Mich	160	80	80	80	160	120	80				1,240,000
Galena, S., L., G., Utah								6	49	5	71,000
Garfield, S., G., Nev	25										85,000
Garfield Grouse, G., Colo									24	12	36,000
Geyser-Marion, G., Utah										63	63,000
Glengary, S., G., Mont				10							10,000
Golconda, S., G., Idaho	120										120,000
Gold Coin, G., Colo								15	85	45	150,000
Gold Coin of Victor, Colo										10	10,000
Golden Cycle, Colo										55	60,000
Golden Eagle, G., Colo									10		10,000
Golden Fleece, G., Colo								192	162	6	569,179
Golden Reward, G., So. Dak	20				60	60					140,000
Gold & Globe, G., Colo									11	25	36,000
Gold Rock, G., Colo				29							28,750
Granby, Z., Mo		20									20,000
Granite, S., L., Idaho	8	20									83,400
Granite Mountain, S., G., Mont	1600	2400	2400	1400	520						12,120,000
Great Western, Q., Cal				25	137	25					388,366
Gwin, Cal										12	12,000
Hale & Norcross, S., G., Nev	224										1,822,000
Harquahala, G., Ariz							72				126,000
Hecla Con., S., L., Mont	100	180	123	180	90	60	120	90	45	30	2,175,000
Helena & Frisco, L., S., Idaho			79	190	20		15	10	50		475,000
Helena & Victor, S., Mont				20							70,000
Highland, G., So. Dak								50	140	200	3,424,918
Holmes, S., Nev					25						75,000
Holy Terror, G., So. Dak										86	86,000
Homestake, G., So. Dak	300	188	150	130	150	150	256	344	375	438	6,525,000
Hope of St. Louis, S., Mont	50				100	175	75	10	60	110	742,252
Horn Silver, S., L., Utah		50	200	200	200	230	150	50	50		5,130,000
Hubert, G., Colo	18	5									247,000
Idaho, G., Cal	357	178	29	93	42	105					5,489,000
Idaho, G., B. C									120	120	240,000
Illinois, S., N. M		20	20								65,000
Iowa, G., S., L., Colo									50	25	75,000
Iron Mountain, S., Mont			50	25		30	50	105	82	5	497,500

DIVIDENDS PAID BY AMERICAN MINES—*Continued.*

Company.	1888	1889	1890	1891	1892	1893	1894	1895	1896	1897	Totals.
Iron Silver. S., L., Colo	300	100	....	....	....	....	....	....	....	....	$2,500,000
Isabella, G., Colo	....	....	....	....	....	....	....	23	180	68	270,500
Ivanhoe, G., Colo	....	10	....	....	....	....	....	....	....	....	10,000
Jackson, G., S., Nev	....	5	....	5	....	....	....	2	....	....	80,000
Jay Gould, G., S., Mont	226	74	22	....	....	....	....	....	....	....	459,000
Jay Hawk, S., G., Mont. (*h*)	....	....	....	....	83	....	....	....	....	....	83,375
Kearsarge, C., Mich	....	....	80	....	....	....	....	40	....	40	160,000
Kennedy, G., Cal	....	....	....	360	500	480	540	184	....	....	1,796,000
Lake Superior, I., Mich	....	....	....	....	400	....	....	84	....	....	484,000
Last Chance, G., B. C.	....	....	....	....	....	....	....	....	20	20	40,000
Last Chance, S., Colo	....	....	....	....	650	....	....	....	....	....	650,000
Leadville, S., L., Colo	....	....	....	....	12	12	....	....	....	....	316,000
Le Roi, G., B C.	....	....	....	....	....	....	....	25	225	350	625,000
Lexington, G., Colo	....	....	....	....	36	....	....	....	....	....	36,000
Lexington, S., Mont. (*i*)	....	64	....	....	....	....	....	....	....	....	609,000
Lillie, G., Colo	....	....	....	....	....	....	....	....	....	16	16,200
Little Chief, S., L., Colo	....	....	20	....	....	....	....	....	....	....	820,000
Little Rule, S., Colo	....	....	100	120	....	....	....	....	....	....	220,000
Maid of Erin, S., L., C., Colo. (*j*)	....	....	....	....	....	....	....	60	....	....	740,000
Mammoth, Utah	50	130	470	320	....	....	....	....	60	....	1,150,000
Maxfield, S., L., Utah	....	....	....	36	18	....	....	....	....	....	117,000
May-Mazeppa, S., L., Colo	....	....	70	110	....	....	....	....	....	....	180,000
Mercur, G., Utah	....	....	....	....	....	50	150	175	200	286	920,000
Merrimac, G., Cal	....	....	....	....	....	....	....	....	....	9	9,400
Minas Prietas, S., Mex	....	....	50	....	....	....	....	....	....	....	50,000
Minnesota, L., Minn	....	....	....	840	840	495	....	....	495	....	3,240,000
Mollie Gibson, S., Colo	....	....	....	1000	1700	1230	100	50	....	....	4,080,000
Monitor. G., So. Dak	....	38	7	....	....	....	....	....	....	....	45.000
Montana, G. S., Mont	418	206	178	83	....	....	....	205	....	....	2,890,000
Montana Ore Purchasing, Mont	....	....	....	....	....	....	....	160	320	160	640,000
Moon-Anchor, G., Colo	....	....	....	....	....	....	....	....	24	69	93,000
Moose, G., Colo	....	....	....	....	....	....	108	72	6	....	186,000
Morning Star, S., L., Colo	....	....	....	50	....	....	....	....	....	....	1,025,000
Morning Star Drift, G., Cal	....	....	....	23	83	72	106	154	132	142	606,000
Moulton, S., Mont	....	....	....	....	30	....	20	30	....	....	460,000
Mount Diablo, S., Nev	40	40	20	30	....	30	....	....	....	....	225,000
Mount McClellan, S., Colo	....	....	....	22	....	....	....	....	....	....	21,936
Mount Rosa, G., Colo	....	....	....	....	....	....	5	5	20	10	40,000
Napa Cons., Q., Cal	....	30	40	40	70	70	50	80	70	80	890,000
Navajo, S., G., Nev	....	40	....	....	....	....	....	....	....	....	226,111
New Elkhorn, G., Colo	....	....	....	....	....	....	....	....	72	....	72,000
New Guston, S., Colo	100	188	170	440	124	....	....	....	....	....	1,198,120
New Idria, Q., Cal	....	....	....	....	....	....	....	....	....	10	30.000
N. Y. & Hond. Rosario, S., G., C. A	....	....	....	....	....	....	....	....	....	180	855,000
Newton, G., Cal	....	....	....	10	....	....	....	....	....	....	10,000
North Banner Con., G., Cal	....	....	....	20	....	....	....	....	....	....	20,000
North Belle Isle, S., G., Nev	200	....	....	....	....	....	....	....	....	....	230,000
North Commonwealth, S., G., Nev	....	....	....	25	....	....	....	....	....	....	25,000
North Star, G., Cal	150	100	....	50	50	100	....	....	....	....	450,000
Nugget, G., Colo	....	....	....	....	....	....	5	5	....	....	10,000
Omaha, G., Cal	....	....	18	....	7	48	43	....	....	....	106,100
Ontario, S., Utah	900	900	1650	900	750	....	....	....	180	208	13,557,500
Original, S., C., Mont	6	3	....	....	....	....	....	....	....	....	138.000
Oro, G., S., L., Colo	....	....	95	....	....	....	....	....	....	....	95,000
Osceola, C., Mich	150	50	225	150	150	100	....	100	125	150	2,222,500
Pacific Coast Borax, B., Cal	....	....	....	180	180	63	....	....	....	....	422,500
Pamlico, G., Nev	21	12	....	....	12	....	....	....	....	....	189.000
Pandora, G., Mont	....	....	....	3	3	....	....	....	....	....	6,000
Parrott, C., S., Mont	144	144	252	360	216	138	67	....	....	....	1,666,122
Pennsylvania Con., G., Cal	....	....	....	....	....	....	....	....	....	18	23,325
Petro, S., Utah	....	....	....	18	....	....	....	....	....	....	17,500
Pharmacist, G., Colo	....	....	....	....	36	44	....	....	....	....	80,000
Pittsburg, G., Nev	30	....	....	....	....	....	....	....	....	....	29,850
Pleasant Valley, C., Utah	....	....	....	....	....	20	....	....	....	....	593,056
Plumas Eureka, G., Cal	70	123	....	70	25	53	....	....	....	....	2,696,294
Plymouth Con., G., Cal	80	....	....	....	....	....	....	....	....	....	2,280.000
Poorman, G., Colo	25	15	85	....	....	....	....	....	....	....	125,000
Poorman, S., Idaho (*g*)	....	....	....	....	57	....	....	....	....	....	56,935
Portland, G., Colo	....	....	....	....	....	....	67	556	240	360	1,223,000
Princess, G., Colo	....	....	....	....	....	....	....	....	....	5	45,000
Quicksilver, Q., Cal. (*l*)	283	193	257	118	....	....	....	....	....	....	2,475,062
Quincy, C., Mich	360	280	320	400	350	300	400	600	1000	800	9,470,000
Rambler-Cariboo, G., B. C	....	....	....	....	....	....	....	....	....	40	40,000
Reco, S., L., B. C	....	....	....	....	....	....	....	....	....	250	187,500
Red Cloud, S., L., Idaho	....	....	20	80	70	10	....	....	....	....	180,000
Reed & National, S., G., Colo	....	....	45	....	....	....	....	....	....	....	45,000
Rescue, G., N. M	....	....	....	....	12	....	....	....	....	....	12,000
Retriever, So. Dak	....	....	....	13	....	....	....	....	....	....	12,500
Rialto, G., Colo	....	....	....	32	18	....	....	....	....	....	50,250
Richmond Con., S., L., Nev	....	....	....	34	....	14	....	....	....	....	4,386,780
Rico-Aspen, Colo	....	....	....	....	....	50	300	....	....	....	350,000
Rocky Fork Coal, Mont	....	....	....	100	100	....	....	....	....	....	200,000
Running Lode, G., Colo	....	....	5	15	6	1	....	....	....	....	27,000

DIVIDENDS PAID BY AMERICAN MINES—*Continued.*

Company.	1888	1889	1890	1891	1892	1893	1894	1895	1896	1897	Totals.
Sacramento, G., S., L., Utah	....	....	....	....	....	....	....	....	5	15	$22,000
Saint Joseph, L., Mo	....	....	....	150	150	150	150	150	...	148	2,672,000
Santa Rosalia, G., Cal	....	....	....	....	....	....	....	....	....	20	115,000
Sheridan, S., G., Colo	....	....	....	75	....	....	....	....	....	....	300,000
Sierra Buttes, G., Cal	15	....	....	25	36	31	....	....	....	....	1,584,933
Sierra Nevada, Idaho	20	20	....	....	....	....	....	....	....	....	40,000
Silent Friend, S., L., Colo	....	....	....	60	....	....	....	....	....	....	60,000
Silver Cord, S., L., G., Colo.	....	45	....	....	....	....	....	....	....	....	265,000
Silver King, G., S., L., Utah	....	....	....	....	....	....	..	263	375	450	1,312,500
Silver Mg. of Lake Valley, N. M	25	25	180	80	....	....	....	....	....	....	300,137
Slocan Star, G., B. C	....	....	....	....	....	....	....	50	200	50	350,000
Small Hopes, S., Colo	....	25	25	....	38	25	....	....	27	....	3,275,000
Smuggler-Union, G., S., Colo. (*m*)	....	....	....	....	....	....	....	....	150	....	150,000
South Swansea, S., L., Utah	....	....	....	....	....	....	....	....	....	08	74,960
Standard Con., G., Cal. (*n*)	50	....	....	10	40	20	40	20	....	40	5,637,940
Swansea, G., S., L., Colo	....	....	....	....	....	....	2	....	....	....	39,000
Swansea, Utah	....	....	....	....	....	....	....	1	20	50	71,500
Tamarack, C., Mich	640	560	670	600	600	600	400	400	300	360	5,130,000
Teal & Poe, S., L., N. M	....	....	....	9	....	....	....	....	....	....	9,000
Temonj, G., Colo	....	....	....	....	....	....	....	10	....	....	10,000
Tomboy, G., Colo	....	....	....	....	....	....	....	300	110	....	410,000
Trinity River, G., Colo	....	....	....	....	....	15	....	....	....	....	15,000
Union, G., Colo	....	....	....	....	....	....	27	13	23	....	73,000
United Verde, C., S., Ariz	....	....	30	....	20	435	....	....	....	....	562,500
Utah, Utah	....	....	....	....	15	5	....	17	22	4	177,000
Utah Con., Nev	....	....	....	....	....	....	....	....	3	....	3,000
Victor, G., Colo	....	....	....	....	....	120	105	240	240	90	805,000
Victor L. & M., Colo	....	....	....	....	....	....	....	24	12	....	42,000
Viola Limited, S., L., Idaho	94	....	....	....	....	....	....	....	....	....	337,500
Ward Con., S., Colo	....	20	....	....	....	....	....	....	....	....	20,000
War Eagle, G., B. C	....	....	....	....	....	....	....	133	55	....	187,500
Webb City, Z., Mo	....	4	....	....	....	....	....	....	....	....	4,400
Western Mine Enterprise, Mont	....	....	....	....	....	....	....	....	....	6	38,680
Whale, G., Colo	....	....	....	5	....	....	....	....	....	....	5,000
Whitewater, G., B. C	....	....	....	....	....	....	....	....	....	30	124,000
Woodside, S., Utah	....	25	....	....	....	....	....	....	....	....	25,000
W. Y. O. D., G., Cal	....	....	....	6	36	24	36	24	....	....	108,000
Yankee Girl, S., Colo (*o*)	....	....	125	260	....	....	....	....	....	....	520,000
Yosemite, S., Utah	....	....	....	....	5	....	....	....	....	....	5,000
Young America, G., Cal	10	....	....	....	....	....	....	....	....	....	175,000

(*G*) Gold; (*S*) Silver; (*L*) Lead; (*I*) Iron; (*C*) Copper; (*Q*) Quicksilver; (*B*) Borax; (*Z*) Zinc; (*M*) Mica.

(*a*) Formerly the Alaska Mining and Milling Company, reorganized in 1891 as the Alaska-Treadwell Gold Mining Company; the dividends credited for 1891 and 1892 are the payments of the latter company. The Alaska Mining and Milling Company had paid $700,000 previously.

(*b*) Reconstructed with the Empire into the Golden Leaf, Limited, of Montana.

(*c*) Previous to the consolidation in August, 1884, the California had paid $31,320,000 in dividends and the Consolidated Virginia $42,390,000.

(*d*) Formerly the Young America South Mining Company, reorganized as the Coptis in 1891.

(*e*) Previous to consolidation the Deadwood paid $275,000 and the Terra $75,000.

(*g*) Poorman Mines, Limited, operating the Poorman mine at Silver City, Idaho, which paid large dividends in 1865 and 1866.

(*h*) Jay Hawk & Lone Pine Consolidated Mining Company, Limited.

(*i*) Société Anonyme des Mines de Lexington.

(*j*) Maid of Erin Silver Mines, Limited, formerly Henriette & Maid Consolidated Mining Company. The dividends for 1887, 1888, 1889, and 1890 were paid by the old company, and those for 1891 and 1892 by the new company.

(*k*) Enterprise Mining Company, of Rico, Colo.; there is also an Enterprise Mining Company in Aspen and one in Leadville.

(*l*) Including dividends paid on preferred stock and common stock.

(*m*) Previous to consolidation in 1896 the Smuggler Mining Company had paid $1,140,000 in dividends.

(*n*) Bodie, Bulwer and Mono transferred to Standard Cons., January, 1897. Previous to consolidation the Bodie had paid $1,677,572, Bulwer $190,000, and Mono $12,500.

(*o*) Yankee Girl Silver Mines, Limited, formerly Yankee Girl Mining Company. The above statement includes the payments by both the old and new companies.

ASSESSMENTS LEVIED BY MINING COMPANIES.

Name and Location of Company.	1890.	1891.	1892.	1893.	1894.	1895.	1896.	1897.	Total to Jan. 1, 1898.
Ada Cons., Utah	....	....	....	$330	....	$3,000	....	....	$3,330
Alma, Utah	....	....	....	....	....	....	....	$625	625
Alliance, Utah	....	$40,000	....	....	....	50,000	....	....	200,000
Allouez, Mich	$40,000	40,000	....	....	$16,000	....	....	....	1,440,937
Alpha, Nev	42,250	15,000	$36,750	10,000	6,000	15,750	$15,750	15,750	273,250
Alta, Nev	54,000	30,000	27,000	25,200	50,400	20,160	32,400	25,200	3,604,960

ASSESSMENTS LEVIED BY MINING COMPANIES—*Continued.*

Name and Location of Company.	1890.	1891.	1892.	1893.	1894.	1895.	1896.	1897.	Total to Jan. 1, 1898.
American Quartz, Cal								$1,000	$1,000
Anchor, Utah		150,000		$90,000					560,000
Andes, Nev	$25,000	30,000	$25,000		$25,000	$15,000	$15,000	20,000	280,000
Baliol, Cal								25,000	25,000
Baltimore, Nev	20,000								145,000
Banner, Idaho								10,000	10,000
Beaver Creek, Mont								4,000	4,000
Belcher, Nev	104,000	104,000	78,000		50,200	50,200	50,200	57,200	3,369,620
Belle Isle, Nev	15,000		30,000	20,000			10,000		240,271
Bellevue-Idaho, Idaho	16,037								104,787
Best & Belcher, Nev	149,485	100,800	50,000	75,600	50,400	50,400	25,200	75,600	2,682,025
Bodie Tunnel, Cal	25,000	25,000	25,000						202,906
Bogan Silver, Utah								8,125	26,875
Brunswick Cons., Cal	25,000	20,000	20,000	20,000	10,000	20,000	15,000	30,000	160,000
Buckeye, Utah							3,750	5,000	8,750
Bullion, Nev	25,000	50,000	100,000	25,000	30,000	40,000	20,000	20,000	3,050,000
Bunker Hill, So. Dak						3,750	625		4,375
Burlington, Cal							3,000		3,000
Butte & Boston, Mont						1,500	1,500		3,000
Butte Queen, Cal			4,000						16,000
Butte & Philadelphia, Mont								1,000	1,000
Caledonia Silver, Nev		150,000			50,000		5,000		3,240,000
California, Cal			6,000			4,500		1,000	17,500
Centennial, Mich								120,000	220,000
Central Eureka, Cal								20,000	56,000
Central Gold & Silver, Cal								2,250	7,500
Central North Star, Cal				10,000					10,000
Challenge Cons., Nev	50,000	50,000	45,200	15,000	50,000	5,000	7,500	5,000	305,000
Chollar, Nev		168,000	112,000	61,600	56,000	56,000	28,000	44,800	2,066,400
Commonwealth, Nev			30,000						190,000
Comstock, Utah							25,000		25,000
Confidence, Nev	18,720	18,720	49,920		6,240	14,976	7,488	14,976	1,651,950
Cons. California & Virginia, Nev			108,000	6,220	108,000	54,000	118,800	216,000	5,176,130
Cons. Imperial, Nev	75,000	150,000	26,500			5,000	500	10,000	2,092,000
Cons. New York, Nev	45,000	30,000	20,000	25,000	5,000	10,000	5,000	60,000	225,000
Cons. Pacific, Nev	6,000								198,000
Crocker, Ariz	25,000	20,000	5,000	5,000					180,000
Crown Point, Nev		150,000	100,000	80,000	65,000	25,000	70,000		2,965,000
Dalton, Utah				3,750	5,000	5,000	5,000	2,500	46,250
Del Monte, Nev	20,000	29,050	20,000						120,000
Derbec Blue Gravel, Cal			10,000	5,000					15,000
Dexter, Nev	8,000								8,000
Diana, Nev			8,000						83,000
Eagle, Cal								5,000	5,000
Eagle, Ore								4,500	4,500
East Best & Belcher, Cal	25,000	45,000	20,000		20,000				110,000
East Golden Gate, Utah								3,000	3,000
East Sierra Nevada, Nev		10,000			5,000				25,000
Emerald, Utah								1,000	1,000
Eureka Cons., Nev						12,500			562,500
Eureka Cons., Utah							5,000		5,000
Eureka Cons. Drift, Cal								75,000	165,000
Exchequer, Nev	50,000	25,000	45,000	15,000	10,000	5,000	5,000	5,000	730,000
Far West Gold & Silver, So. Dak								750	12,125
Found Treasure, Nev	45,000		50,000						131,500
Four Aces, Utah								2,500	2,500
Gold Belt, Utah				1,345			1,667		3,012
Gold Flat, Cal			11,000	2,000					13,000
Gold Ridge, Ore								4,000	4,000
Golden Fleece, Cal								260	56,260
Goodyear, Mont			2,000	4,183					17,183
Gould & Curry, Nev	60,400	64,800	76,400	80,200	32,400	48,600	48,600	59,400	4,909,800
Grand Prize, Nev	25,000								785,000
Gray Eagle, Cal								10,000	10,000
Hale & Norcross, Nev	56,000	168,000	168,000	56,000	56,000	39,200	61,600	39,200	5,798,000
Hartery Cons., Cal	5,000	5,000			2,000	2,000	2,000		33,000
Hartshorn, So. Dak	6,250								8,750
Haywood Group, So. Dak	2,000								2,000
Hidden Treasure, Cal				1,000					1,000
Himalaya, Utah		1,800	1,800						10,000
Holmes, Nev	25,000								845,000
Honorine, Utah		12,500							50,000
Homestake, Utah								4,000	4,000
Horsefly, B. C								18,000	18,000
Horseshoe Bar Cons., Cal								24,000	70,800
Hudson Bay, Cal				10,000					10,000
Independence, Nev			5,000						345,000
Iron Hill, So. Dak	20,000	15,000							169,375
Jack Rabbit, Cal			15,000	13,000	5,000				118,000
Jackson, Nev				10,000					247,500
Julia Cons., Nev		11,000		5,000		5,500	5,500	5,500	1,495,500
Jupiter Gravel, Cal								40,000	40,000

ASSESSMENTS LEVIED BY MINING COMPANIES—*Continued.*

Name and Location of Company.	1890.	1891.	1892.	1893.	1894.	1895.	1896.	1897.	Total to Jan. 1, 1898.
Justice, Nev		$26,250	$42,000	$30,000	$75,000	$20,000	$15,750		3,665,750
Kentuck Cons., Nev		36,750	31,500	10,500	26,250	10,500	5,250	$10,500	180,000
Kingman Silver, Ariz		5,000							5,000
Lady Washington, Nev		21,400					5,400		157,800
Larkin, Cal								18,000	28,000
Leo, Mont							10,000		52,500
Little Pittsburg, Utah						4,000	6,000	4,000	14,000
Locomotive, Ariz	$5,000								115,000
Lone Hill, Cal								1,125	1,125
Lone Star Cons., Cal			5,000						12,500
Lucky Bill, Utah							7,200	6,600	54,600
Marguerite, Cal								20,000	55,000
Martin White, Nev	50,000	50,000	50,000	25,000	25,000				1,350,000
Mexican, Nev	25,200	50,400	75,600	75,600	75,600	75,600	40,320	20,000	3,104,080
Michigan Gold, Mich			10,000						40,000
Milwaukee, Mont		2,500							12,500
Mineral Hill, Cal								2,500	2,500
Modoc Chief, Idaho			4,375						4,375
Mollie Gibson, Colo			10,000						20,000
Montreal, Utah			750			375		375	5,250
Mount Diablo, Nev							7,500		145,000
Mount Terry, So. Dak	750								750
Navajo, Nev	15,000	15,251	20,000	20,000					555,521
Nevada Queen, Nev		15,000	25,000	25,000		5,000			270,000
North Banner, Cal							10,000		21,794
North Belle Isle, Nev	20,000	50,000	20,000	38,075			10,000		523,075
North Commonwealth, Nev	25,000	25,000		10,000					120,000
North Eureka, Utah							1,500		1,500
North Gould & Curry, Nev		30,000	10,000	10,000	20,000		10,000		320,000
North Occidental, Nev	6,000								18,000
North Peer, Ariz	5,000								21,000
Occidental Cons., Nev	75,000	25,000	50,000	55,000	30,000	30,000	65,000	30,000	483,652
Ophir, Nev	50,000	50,000	50,000	100,000	100,000	100,000	25,200	25,200	4,661,040
Opohongo, Utah								500	500
Original Keystone, Nev			10,000						250,000
Osceola, Cons., Cal								1,000	4,000
Overman, Nev	28,800	79,340	126,720	60,000	34,560	23,040	34,560	17,280	4,205,840
Penn. Cons., Cal		2,750							36,050
Peer, Nev	10,000	15,000	20,000	10,000	5,000				215,000
Peerless, Nev	25,000	10,000	5,000	5,000	5,000				410,000
Phœnix, Utah								1,000	1,000
Pine Hill, Cal				3,000	3,000	5,000	5,000	10,000	30,000
Potosi, Nev	55,400	112,000	56,000	84,000	112,000	56,000	28,000	50,400	2,072,000
Queen Bee, So. Dak	3,000								3,000
Rainbow, So. Dak			1,250			438	425	100	5,213
Rescue Gold, Nev								3,000	3,000
Reward Gold, Cal								7,040	7,040
Ridge Copper, Mich								50,000	50,000
Ropes, Mich				20,000					20,000
St. Mary's Copper, Mich				2,000		2,000			4,000
Savage, Nev		112,000	122,000	112,000	100,805	67,200	67,200	67,200	1,096,210
Scorpion, Nev	90,000		5,000		5,000			5,000	420,000
Seg. Belcher & Mides, Nev	80,000	50,000	25,000	35,000	20,000	20 000	10,000	10,000	350,000
Sevier, Utah								22,500	50,000
Sheep Rock, Utah								5,250	5,250
Sierra Nevada, Nev	71,910	80,000	55,000	45,000	50,000	50,000	50,000	400,000	4,955,910
Silver Hill, Nev	43,200	30,000	16,200	5,400	5,400			5,400	1,998,000
Silver King, Ariz	30,000	60,000	25,000		100,000		75,000	50,000	390,000
Silver King, Utah								3,000	3,000
Silver State, Utah								1,000	1,000
Soulsby Cons., Utah								13,125	17,500
Siskiyou Cons., Cal		8,000	7,000	9,000	14,000	4,000	2,000		44,000
Standard Cons., Cal	50,000								99,887
Sunbeam Cons., Utah								11,250	16,250
Taylor Plumas, Cal		10,000							20,000
Telegraph, Cal			975						3,575
Teresa, Mex			20,000	60,000		15,000		10,000	165,000
Tetro, Utah							8,000	6,000	15,000
Troy, Alaska								2,000	4,250
Union Cons., Nev	50,000	30,000	50,000	45,000	35,000	20,000	40,000	20,000	2,565,000
Utah Cons., Utah				25,000	5,000	5,000	10,000	30,000	445,722
Valenzuela, Mex						2,000			6,000
Victory, So. Dak							875		2,625
Wall Street, Mont			900						1,500
Waterloo, Cal				30,000					30,000
Weldon, Ariz	10,000	10,000	5,000	10,000					65,000
Wolverine, Mich						60,000			60,000
Wood River, Idaho		3,000							3,000
W. Y. O. D., Cal		22,500							22,500
Ybarra Gold, Mex								22,500	195,000
Yellow Jacket, Nev			156,000	90,000	90,000	90,000	90,000		6,144,000
Yellow Jacket, Utah								1,500	1,500

AUSTRALASIA.

The most important articles of mineral production in the seven colonies of Australasia are gold, silver, lead, copper, tin, iron, and coal. These industries are referred to specifically under the respective captions elsewhere in this volume. The statistics of production, imports, and exports as reported in the official statistics are summarized in the following tables:

MINERAL PRODUCTION OF NEW SOUTH WALES. (*a*) (IN METRIC TONS AND DOLLARS; £1 — $5.)

Year.	Alunite.		Antimony and Ore.		Bismuth		Chrome Ore		Coal.		Coke.		Cobalt Ore.		Copper Ingot.	
1892....	834	$16,420	740	$73,400	14	$5,400	.....	....	3,841,842	$7,311,945	8,026	$44,260	77	$5,550	3,592	$802,865
1893....	834	16,420	1,802	125,460	..	......	.....	....	3,307,812	5,858,610	18,144	101,165	26	1,525	1,068	221,175
1894....	876	17,240	1,270	93,720	..	......	3,067	$61,800	3,730,829	5,777,865	35,009	166,045	3	50	1,582	305,170
1895....	845	16,640	486	36,235	..	.....	4,677	65,240	3,798,825	5,476,335	28,072	123,415	6	130	2,838	596,500
1896....	1,393	20,580	185	9,170	41	2,450	3,913	56,400	3,972,068	5,627,305	26,773	109,255	..	......	4,524	1,001,180

Year.	Copper Ore and Regulus		Fire-clay.		Gold—Kg.		Iron.		Iron Oxide		Lead, Argentiferous. Ore.	Lead, Argentiferous. Metal	Lead, Argentiferous. Value.	Limestone Flux.	
1892....	1,320	$136,165	36	$400	4,879.1	$2,845,889	2,827	$113,025	460	$4,345	88,905	46,583	$12,104,760	105,032	$465,155
1893....	1,032	70,955	21	240	5,576.5	3,256,430	2,226	73,930	1,280	7,630	158,353	59,335	14,767,945	132,625	555,205
1894....	590	62,235	24	300	10,102.2	5,783,585	2,406	85,850	440	3,350	140,018	43,225	10,976,695	91,430	346,445
1895....	1,075	107,925	20	275	11,202.6	6,579,646	2,442	78,100	155	1,740	193,266	30,162	7,805,050	105,861	340,800
1896....	15	375	35	345	9,221.2	5,366,800	4,798	166,415	381	4,005	271,640	19,886	8,794,665	90,346	271,305

Year.	Manganese		Opal—Kg.		Shale, Kerosene.		Silver—Kg.		Tin Ingot.		Tin Ore.		Zinc.		Sundry Minerals
1892....	16	$235	19.5	$10,000	75,384	$680,397	10,907	$284,420	3,305	$1,507,705	243	$62,865	452	$25,275	$5,790
1893....	..	.....	206.8	61,575	56,551	506,105	16,546	390,655	2,679	1,115,695	150	33,020	....	....	2,785
1894....	14	220	91.2	28,420	21,510	158,905	26,339	470,750	2,653	897,225	193	38,760	....	....	4,460
1895....	3	50	138.3	30,000	60,377	376,095	17,112	409,290	2,235	680,400	78	12,715	....	....	23,185
1896....	..	.....	630.4	125,000	32,348	171,010	9,198	132,590	1,737	496,060	98	14,525	....	....	4,620

(*a*) From the *Annual Report of the Department of Mines and Agriculture*, New South Wales, 1896.

MINERAL IMPORTS OF NEW SOUTH WALES. (*a*) (IN METRIC TONS AND DOLLARS; £1—$5.)

Year.	Cement—Barrels.		Chrome Ore.		Coal.		Coke.		Copper. In Matte and Regulus.		Copper. Ingot.	
1893....	127,691	$330,225	174	$2,620	475	$1,865	62,863	$322,975	56	$11,725	93	$16,070
1894....	145,662	361,115	895	16,835	379	1,225	48,347	183,420	187	29,225	353	71,040
1895....	162,621	380,760	3,840	66,705	378	1,870	43,206	134,160	94	19,155	246	50,480
1896....	126,242	239,025	5,537	109,920	807	4,870	48,824	675,535	93	19,380	5	1,085

Year.	Copper—*Continued.*			Gold.		Iron and Steel.			Iron.			
	Ore.		Rod, Sheet, and Wire.	Coin.	Bullion.	Certain Manufactures of. (*c*)		All Other.	Pig.		Ore.	
1893....	1,851	$90,320	$15,730	$7,508,555	$12,533,865	57,399	$3,459,205	$177,645	7,218	$117,945	3,168	$15,360
1894....	669	32,535	16,070	1,493,790	13,133,480	50,987	2,654,950	162,660	3,744	59,880	1,409	7,275
1895....	879	20,620	11,400	279,225	10,051,195	55,004	2,642,300	142,035	6,568	98,055	1,522	6,945
1896....	315	12,875	27,895	2,407,100	9,943,070	67,978	3,626,075	....	8,195	124,255	103	555

Year.	Lead.				Nickel Ore.		Quicksilver. (*d*)		Salt.			
	Pig.		Pipe and Sheet.						Rock.		In Bags.	
1893....	1,123	$55,750	316	$21,075	800	$19,010	2,332	$81,620	18,314	$93,965	26,451	$258,750
1894....	7,016	334,545	53	4,445	1,432	39,690	1,078	33,535	5,900	35,245	26,099	230,045
1895....	4,775	224,330	18	1,955	317	9,865	797	29,595	10,811	70,515	26,956	223,810
1896....	7,440	362,720	268	19,720	8	120	261	9,250	7,275	39,825	25,784	207,560

Year.	Saltpeter.		Silver.							Slate.			
			Ingot—Kg.		Ore.		In Matte—Kg.		Coin.	Roofing—Number		Slabs. Number.	
1893....	47	$5,530	10	$300	1,940	$146,095	(*b*)	....	$177,645	2,946,659	$98,860	1,907	$5,720
1894....	181	12,480	415	8,850	2,958	270,140	(*b*)	....	50,000	1,077,501	41,555	2,755	5,525
1895....	188	15,410	95	1,945	922	63,275	503	$10,110	109,470	954,449	30,635	2,150	7,405
1896....	162	19,905	180	3,900	15,078	672,770	3,958	79,245	49,000	2,219,681	90,595	3,602	11,675

Year.	Soda Ash.		Soda.						Stone, All Kinds, Excepting Marble.	Sulphur.	
			Bicarbonate.		Caustic.		Crystals.				
1893....	503	$19,925	508	$18,625	1,052	$60,700	876	$17,305	$22,950	481	$14,815
1894....	1,057	30,120	488	17,070	1,598	96,550	1,577	28,445	11,425	2,067	43,340
1895....	1,068	27,370	636	24,520	850	46,985	1,164	24,895	69,740	1,728	32,800
1896....	1,749	60,300	611	25,080	1,010	48,465	745	18,305	40,925	1,330	22,235

Year.	Tin.					Yellow Metal.	Zinc.			
	Ingot.		Ore.		Plates.		Slabs.		Sheet and Manufactures.	
1893....	1,150	$455,385	2,517	$598,815	$193,845	$36,890	777	$58,345	316	$35,670
1894....	1,097	379,760	2,203	513,480	299,665	63,930	683	57,610	278	29,060
1895....	946	272,700	1,493	270,980	372,870	80,525	693	53,880	320	28,110
1896....	910	265,505	1,073	169,875	353,345	92,895	1,416	116,115	368	35,500

(*a*) From the *New South Wales Statistical Register*. Figures for 1892 not available. (*b*) No returns given. (*c*) The figures for "certain manufactures" of iron and steel in the years 1893, 1894, and 1895 include only those articles the weight of which is given in the official returns. The figures for 1896 include all manufactures of iron and steel. "All other" manufactures comprise the values of those articles for which no weights are given in the reports. (*d*) Number of flasks.

MINERAL EXPORTS OF NEW SOUTH WALES. (*a*) (IN METRIC TONS AND DOLLARS; £1 = $5.)

Year.	Antimony						Acid, Sulphuric.		Bismuth Ore.		Cement. Barrels.		Coal.	
	Ore.		Auriferous.		Metal.									
1893....	1,631	$104,730	135	$15,750	36	$7,010	(*e*)	....	......	....	8,335	$19,035	1,864,451	$4,074,645
1894....	679	32,240	561	56,945	30	4,535	140	$20,720	2.0	$50	6,927	16,060	2,159,127	4,023,845
1895....	225	9,945	209	19,850	44	6,460	247	19,430	0.6	210	10,279	23,275	2,200,890	3,869,770
1896....	87	2,810	25	3,160	23	3,200	100	5,535	45.0	3,850	33,987	74,650	2,514,506	4,501,380

Year.	Coke.		Chrome Ore.		Cobalt Ore.		Copper.								
							Ingot.		In Matte.		Regulus.		Ore.		Rod, Sheet, Wire.
1893....	6,433	$29,375	323	$5,465	28	$1,550	*b*1,974	$413,445	(*c*)	....	897	$65,540	137	$5,565	$3,030
1894....	11,858	53,330	3,977	80,855	590	15,415	1,932	373,195	373	$70,640	(*e*)	....	301	7,050	3,670
1895....	8,948	42,625	8,151	140,535	235	7,265	2,926	619,730	194	37,710	1,086	115,925	55	1,730	3,370
1896....	5,521	22,615	9,465	145,165	284	145,165	4,026	904,540	595	117,595	(*e*)	....	15	375	3,000

Year.	Gold.				Iron and Steel.				Lead.					
	Ore.	Coin.	Bullion.		Pig.		Manufactures. (*d*)		Pig.		Pipe and Sheet.		Argentiferous.	
1893....	$78,720	$598,978	209	$5,177	209	$3,670	9,912	$133,196	524	$26,040	230	$15,610	59,426	$403,999
1894....	237,315	9,877,865	2,848	1,663,455	400	6,585	9,646	587,685	3,386	165,020	326	21,060	43,193	7,716,065
1895....	946,845	13,552,800	3,758	2,174,985	201	3,825	14,504	726,680	2,737	131,400	577	39,945	30,162	4,798,680
1896....	488,425	18,014,930	(*e*)	....	1,470	26,350	17,289	1,039,875	3,150	167,425	750	52,535	19,897	3,974,335

Year.	Nickel Ore.		Saltpeter.		Salt.				Silver.				
					Rock.		Other, in Bags.		Ore.		In Matte—Kg.		Coin.
1893....	269	$6,530	6	$755	97	$965	2,193	$29,605	159,929	$4,794,955	20,125	$19,026	$45,830
1894....	2,148	53,545	5	770	199	1,855	2,660	34,795	143,200	3,416,820	7,019	133,575	63,820
1895....	343	9,175	17	2,480	855	7,995	3,999	46,035	194,158	3,068,985	5,855	118,190	38,330
1896....	(*e*)	....	6	790	457	3,605	2,820	32,440	284,524	5,447,925	7,550	152,960	66,450

Year.	Soda Ash.		Soda.				Stone.	Sulphur.		Tin.				
			Bicarbonate.		Caustic.					Ore.		Ingot.		Plate.
1893....	141	$5,760	29	$1,460	140	$9,775	$6,520	6	$310	150	$33,020	4,024	$1,651,750	$36,660
1894....	178	6,560	50	2,400	214	14,675	4,665	34	1,305	214	42,835	3,749	1,276,725	51,585
1895....	175	5,800	56	2,500	67	4,000	4,705	42	2,105	80	12,955	3,181	970,410	87,445
1896....	207	7,010	39	1,790	143	7,545	7,015	139	4,240	99	14,525	2,646	763,595	79,100

(*a*) From the *New South Wales Statistical Register.* (*b*) Inclusive of "copper matte." (*c*) Included under "ingot." (*d*) Values including those of manufactures for which no quantity is stated, as follows: In 1893, $4,695; 1894, $5,955; 1895, $17,735; 1896, $17,970. (*e*) Not stated in the reports.

MINERAL PRODUCTION OF NEW ZEALAND. (*a*) (*b*) (IN METRIC TONS: £1 = $5.)

Year.	Antimony Ore.		Coal.		Coke.		Gold—Kg.		Manganese Ore.	
1892............	370	$24,500	684,088	$1,887,135	4,375	$28,455	7,405	$4,773,720	529	$6,195
1893............	336	17,335	702,613	1,919,525	52	265	7,054	4,565,690	324	4,715
1894............	45	3,805	731,059	1,978,545	109	800	6,893	4,439,195	544	5,780
1895............	55	7,430	752,680	2,053,810	293	3,575	9,129	5,810,820	213	2,625
1896............	21	2,250	805,537	2,143,240	107	1,315	8,202	5,207,140	66	1,025

MINERAL PRODUCTION—*Continued.*

Year.	Mixed Ores.		Silver—Kg.	
1892............	85	$3,155	686	$19,980
1893............	88	3,250	1,962	48,715
1894............	25	1,765	1,685	33,485
1895............	63	4,400	2,644	53,395
1896............	38	6,675	2,933	....

MINERAL IMPORTS. (*c*) (IN METRIC TONS; £1 = $5.)

Year.	Coal.		Iron.	Machinery.	Railway Materials	Tools and Implements.
1892............	127,460	$582,765	$2,316,765	$1,025,485	$187,965	$353,635
1893............	119,823	559,780	2,040,680	1,060,220	274,705	337,900
1894............	114,768	525,955	1,903,210	889,980	213,985	309,685
1895............	109,929	488,105	1,739,640	770,045	234,940	299,325
1896............	....	....	....	....	....	....

(*a*) From *New Zealand Mines Statements*, by the Hon. A. J. Cadman, Minister of Mines, Wellington. (*b*) The exports are stated to be identical with the production, except in the case of coal, of which substance the exports were as follows: in 1892, 80,174 metric tons, value $401,125; in 1893, 70,242 tons, value $363,495; in 1894, 76,204 tons, value $367,190; in 1895, 87,368 tons, value $416,710; in 1896, 87,660 tons. (*c*) From *British Statistical Abstracts.*

MINERAL PRODUCTION OF QUEENSLAND. (*a*) (IN METRIC TONS; £1 = $5.)

Year.	Antimony Ore.		Bismuth Ore.		Building Stone. (*b*)		Coal.		Copper Ore.		Gems.	Gold—Kg.		Lead.	
1892........	26	$1,390	132	$80,000	30,146	$35,511	269,327	$616,540	82	$12,305	$22,185	19,146	$10,772,265	(*c*)	....
1893........	30	1,440	75	53,380	27,510	21,820	268,632	626,700	302	19,110	22,500	19,189	10,796,450	*c*127	$4,600
1894........	28	1,400	66	31,350	42,997	53,115	275,036	572,965	422	47,910	*b*12,085	21,135	11,891,442	458	21,850
1895........	(*c*)	....	60	16,290	52,206	58,305	328,237	662,650	441	65,485	*b*29,575	19,647	11,054,435	369	18,170
1896........	(*c*)	....	(*c*)	....	(*c*)	....	377,332	774,935	589	105,210	(*c*)	19,917	11,206,737	628	30,900

Year.	Manganese Ore		Opal.	Silver Ore.		Silver—Kg.		Tin Ore.		Wolfram Ore	
1892........	(c)	....	$50,000	(c)	....	6,992	$182,180	2,427	$615,490	(c)	....
1893........	(c)	....	(c)	696	$86,545	10,552	212,040	2,473	534,765	e4	$240
1894........	142	$2,000	60,000	188	9,375	5,697	110,885	2,917	511,885	107	3,550
1895........	361	5,515	163,750	77	10,060	6,999	150,210	2,148	340,665	25	2,710
1896........	305	4,500	116,500	(c)	....	8,687	160,810	1,579	245,090	3	300

MINERAL IMPORTS OF QUEENSLAND. (*d*) (IN METRIC TONS; £1 — $5.)

Year.	Cement and Plaster of Paris—Barrels.		Coal.		Coke.		Glass and Glassware.	Iron and Steel.
1892..........	16,419	$31,100	18,670	$52,950	11	$95	$96,975	$1,094,040
1893..........	27,358	45,215	14,688	38,080	74	455	74,175	749,070
1894..........	25,715	49,085	18,166	44,980	50	565	99,675	1,030,590
1895..........	47,244	116,620	18,028	91,575	(c)	....	147,615	1,468,785
1896.	68,607	168,860	18,748	88,225	5	20	176,330	1,519,595

Year.	Petroleum—Gallons.		Rails, Track Material.	Gold Bullion—Kg.		Gold Specie.	Silver Bullion. Kg.		Silver Specie.
1892..........	1,175,833	$141,735	$17,885	28.8	$17,450	$1,000,000	7.4	$210	$24,535
1893..........	1,375,836	172,690	16,060	15.1	9,330	4,342,435	(c)	....	10,580
1894..........	1,811,129	201,890	110,805	24.0	12,925	1,452,930	1.5	45	2,955
1895..........	1,638,975	282,530	189,980	56.3	33,375	3,001,000	7.1	210	1,750
1896	1,271,910	265,645	188,230	189.2	108,405	400,000	5.0	120	13,380

MINERAL EXPORTS OF QUEENSLAND. (*a*) (IN METRIC TONS; £1 — $5.)

Year.	Antimony Ore.		Bismuth Ore.		Copper Ore.		Copper Ingot.		Copper Regulus.		Copper Matte.		Gold—Kg.		Gold Ore.	
1892....	(c)	....	(c)	....	*b*54	$4,470	*b*255	$57,445	(c)	....	(c)	....	*b*18,491	$10,364,350	(c)	......
1893....	204	$17,080	68	$40,105	106	6,420	29	6,225	22	$1,775	289	$26,480	19,335	10,821,885	25	$8,060
1894....	109	9,055	37	23,510	64	4,900	148	25,400	376	41,870	127	18,500	20,030	11,909,580	33	2,160
1895....	44	1,935	44	24,760	102	10,840	315	62,695	211	51,885	225	31,200	21,529	11,360,545	199	9,955
1896....	(c)	....	0.7	750	209	21,590	377	71,045	237	56,970	142	12,400	19,496	10,571,285	68	5,390

Year.	Silver Ore.		Silver-Lead Bullion.		Silver Precipitate.		Doré Silver Bullion. Kg.		Mundic Ore.		Precious Stones	Tin Ore.		Tin.		Wolfram Ore.	
1892....	*b*388	$74,060	*b*1,191	$358,690	(c)	......	(c)	....	(c)	....	(c)	*b*1,876	$577,145	*b*426	$198,675	(c)	.....
1893....	670	80,545	2,560	783,875	(c)	......	(c)	....	7	$45	$24,370	1,744	445,520	245	119,615	4	$240
1894....	133	9,875	1,008	478,085	(c)	......	(c)	....	6	855	12,085	1,783	365,745	473	173,400	69	6,570
1895....	77	10,060	561	198,710	1	$6,785	489	$26,840	(c)	....	29,575	1,180	224,175	459	146,760	34	2,985
1896....	181	46,850	174	108,630	0.8	1,500	3,163	144,460	5	770	11,730	751	136,410	355	97,485	23	2,365

(*a*) From the *Annual Reports of the Under Secretary for Mines*, Queensland, when not otherwise stated. (*b*) From *Mineral Statistics of the United Kingdom*. (*c*) Not reported. (*d*) From *Statistical Abstracts for the Several Colonial and Other Possessions of the United Kingdom*. (*e*) Quantity exported.

MINERAL IMPORTS OF SOUTH AUSTRALIA. (*a*) (IN METRIC TONS; £1 — $5.)

Year.	Coal.		Coke.		Iron.				Silver-Lead.				Silver, Bullion and Specie.
					Bar, Sheet, Hoop, and Rod.		Galvanized, Plain, and Corrugated.		Metal.		Ore.		
1892....	223,005	$688,525	101,491	$872,356	8,472	$318,385	3,987	$331,365	40,761	$8,173,535	85,567	$3,038,315	$267,765
1893....	244,589	745,860	68,112	446,790	5,394	194,475	4,831	347,680	57,735	10,056,205	149,018	4,321,140	3,805,735
1894....	259,695	768,670	119,557	751,525	4,848	175,620	6,236	450,995	38,018	6,750,430	109,386	2,511,160	307,670
1895....	261,117	675,450	91,293	531,875	5,158	163,205	4,153	286,970	25,079	4,293,305	134,878	1,989,950	978,140
1896....	348,583	895,480	68,454	315,600	7,656	263,610	7,110	527,475	25,806	4,379,645	234,297	4,143,515	1,782,730

(*a*) From *British Statistical Abstracts*, except the figures for 1896, which are from the *Statistical Register of South Australia*.

MINERAL EXPORTS OF SOUTH AUSTRALIA. (a) (IN METRIC TONS AND DOLLARS, £1 = $5.)

Year.	Coal.		Copper.		Copper Ore.		Gold—Kg.		Gold Ore.		Lead Ore.	
1892........	(g)	....	2,696	$660,200	10,674	$217,425	204.3	$180,485	(g)	....	29	$1,670
1893........	(g)	....	4,389	1,044,835	1,279	29,040	1,051.9	642,580	(g)	....	20	925
1894........	19	$55	5,023	1,043,195	314	9,815	1,051.9	642,580	(g)	....	4	170
1895........	876	1,725	5,251	1,132,470	268	10,085	1,152.5	643,960	7	$420	4	195
1896........	37,423	110,480	b4,689	1,097,320	354	15,750	265.1	157,905	8	200	24,352	1,183,620

Year.	Manganese Ore.		Matte.		Mica.	Silver-Lead Ore		Salt.		Slate, Roofing. Number.	
1892........	715	$7,680	(g)	....	$990	75	$2,605	6,475	$34,220	60,000	$1,155
1893........	2,467	31,795	(g)	....	(g)	85	2,100	7,229	46,705	(g)	....
1894........	177	2,585	87	$14,605	12,650	(g)	....	7,747	55,235	(g)	....
1895........	49	730	(g)	....	(g)	2	55	(g)	....	(g)	....
1896........	(g)	....	3,385	465,910	1,660	c129,438	3,652,360	d19,332	127,280	(g)	4,923

Year.	Spelter.		Tin Ore.		Various.	
1892........	26	$1,835	(g)	....	15	$240
1893........	73	4,630	(g)	....	21	950
1894........	46	2,895	(g)	....	......	2,155
1895........	26	1,610	70	$9,075	6	360
1896........	36	2,020	(e)	....	2	90

(a) From the *Mineral Statistics of the United Kingdom*, except the figures for 1896, which are from the *Statistical Register of South Australia*, Part IV. (b) Includes yellow metal. (c) There was exported in 1896 also silver-lead metal, 13,869 metric tons ($1,416,555). (d) Exported in 1896 also rock salt, 8 metric tons ($50). (e) No tin ore exported in 1896; but tin, block and sheet, 5 metric tons ($1,795). (g) Not reported.

MINERAL PRODUCTION OF TASMANIA. (a) (IN METRIC TONS AND DOLLARS, £1 = $5.)

Year.	Coal.		Copper Ore.		Gold—Kg.		Iron Ore.		Lead-Silver Ore.		Stone.				
											Bluestone.			Limestone.	
											Cubic Yards.	Tons.	Total Value.	Tons	Total Value
1892....	36,240	$178,345	....	....	1,403	$870,350	(b)	.....	9,475	$227,510	(b)	(b)	....	2,253	$5,750
1893....	34,587	170,210	59	$12,255	1,158	729,375	(b)	.....	14,581	998,050	(b)	(b)	....	1,546	3,965
1894....	31,417	65,920	127	25,000	1,816	1,127,425	(b)	.....	21,401	1,465,215	(b)	(b)	....	1,433	5,270
1895....	33,703	70,145	34	2,600	1,709	1,061,645	(b)	.....	18,194	879,785	7,144	7,961	$13,540	1,419	7,500
1896....	44,286	86,770	52	7,450	1,947	1,187,870	203	$250	46,844	1,425,435	4,256	(b)	3,435	2,621	3,101

Year.	Stone—*Continued.*						Tin Ore.					
	Freestone, Flagstones, and Building Stones.			Rubble or Metal.			Quantity.			Value.		
	Cubic Feet.	Loads	Total Value.	Cubic Feet.	Tons.	Total Value.	Alluvial.	Lode.	Total.	Alluvial.	Lode.	Total.
1892....	89,058	780	$21,120	116,262	(b)	$8,460	4,494	244	4,738	$1,208,335	$72,080	$1,280,415
1893....	87,470	(b)	3,965	517,860	700	16,405	4,491	291	4,782	968,570	63,485	1,032,055
1894....	48,019	506	5,895	103,050	(b)	11,770	4,352	1	4,353	784,125	200	784,325
1895....	21,470	(b)	6,170	1,140	6,200	5,175	3,887	39	3,926	726,230	180	766,410
1896....	13,575	4,220	7,590	4,556	(b)	1,635	3,867	(b)	3,867	804,395	(b)	804,395

(a) From *Statistics of the Colony of Tasmania*, Part V., "Production." (b) Not reported.

MINERAL IMPORTS OF TASMANIA. (a)

Year.	Cement and Whiting. Metric Tons.		Coal and Coke. Metric Tons.		Copper and Lead.	Earthen and Glassware	Glass, Sheet, Crown, and Plate.	Gold Specie.	Iron and Tin.	Muntz Metal.	Railway Material	Silver Specie and Bullion.
1892....	(b)	......	43,853	$227,940	$8,875	$93,355	$13,540	$10,000	$128,875	(b)	$31,055	$6,750
1893....	(b)	......	32,167	121,840	8,205	51,175	10,860	91,750	121,100	(b)	57,000	2,230
1894....	1,038	$8,480	39,881	60,320	5,090	55,605	8,220	170,000	115,050	$508,785	26,715	5,000
1895....	1,605	14,855	36,139	58,615	5,590	36,140	8,125	485,000	151,120	851,665	58,465	15,065
1896....	897	8,775	28,145	11,838	5,105	69,010	10,525	(b)	179,335	517,260	148,960	11,100

(a) From *Statistics of the Colony of Tasmania*. (b) Not reported.

MINERAL EXPORTS OF TASMANIA. (*a*) (IN METRIC TONS AND DOLLARS; £1 = $5.)

Year.	Bismuth Ore.		Coal and Coke.		Copper Ore.		Earthen and Glassware	Galena. Quantity.	Gold.				
									Ore.		Bullion.		Coin.
1892 (*b*).	(*c*)	....	(*c*)	....	(*c*)	....	(*c*)	164	(*c*)	....	1,164	$728,685	(*c*)
1893 (*b*).	(*c*)	....	(*c*)	....	(*c*)	$229,830	(*c*)	40	(*c*)	....	1,029	655,520	$2,120
1894....	3.5	$4,115	391	$5,555	571	553,035	$345	(*c*)	547.5	$29,380	1,644	1,035,265	28,500
1895....	(*c*)	....	101	705	205	48,365	40	(*c*)	395.0	28,890	1,664	1,062,650	58,950
1896....	1.0	400	380	680	86	8,295	545	(*c*)	1,032.0	42,835	1,759	1,118,065	(*c*)

Year.	Iron.						Lead.		Nickel Ore.		Silver.			
	Oxide.		Old Metal.		Rails.						Ore.		Bullion.	
1892 (*b*).	(*c*)	....	(*c*)	....	(*c*)	$16,470	(*c*)	....	(*c*)	....	3,061	$396,765	(*c*)	....
1893 (*b*).	(*c*)	....	(*c*)	....	(*c*)	12,960	(*c*)	....	(*c*)	....	13,261	769,260	(*c*)	....
1894....	29	$170	1	$15	(*c*)	9,670	(*c*)	....	110	$3,560	20,018	1,076,970	109	$12,250
1895....	66	325	96	670	117	1,395	7.0	$380	(*c*)	....	20,575	1,139,580	(*c*)	....
1896....	29	145	300	2,710	61	900	2.5	100	(*c*)	....	21,150	1,114,740	(*c*)	....

Year.	Tin.				Zinc.	
	Ore.		Metal.			
1892 (*b*).	29	....	3,225	$1,453,970	(*c*)	....
1893 (*b*).	140	....	3,178	1,330,795	(*c*)	....
1894....	121	$20,780	2,981	991,490	8.0	$345
1895....	13	1,465	2,771	837,305	9.0	500
1896....	2	10	2,743	795,180	10.4	380

(*a*) From *Statistics of the Colony of Tasmania*. (*b*) The complete data for 1892 and 1893 are not available, and the values of the exports stated for those years represent aggregate valuations, viz.: Under gold, the value given is that of ore, pyrites, and metal; under silver, that of ore and bullion; under copper, that of ore and pyrites; under iron, that of ore, oxide, old metal, and rails; and under tin, the value is that of ore and metal. (*c*) Not stated in the reports

MINERAL PRODUCTION OF VICTORIA. (*a*) (IN METRIC TONS AND DOLLARS, £1 = $5.)

Year.	Antimony Ore.		Coal.		Lignite.		Copper Ore		Gold—Kg. (*b*)		Lead Ore.		Slate and Flagging.		Tin Ore.	
1892..	299	$11,890	23,737	$100,220	6,706	$18,625	(*d*)	....	20,356	$13,089,120	(*d*)	......	626	$900	414	$5,195
1893..	90	2,155	93,194	245,835	4,572	11,035	(*d*)	....	20,874	13,422,520	(*d*)	......	171	225	54	10,850
1894..	36	875	174,406	474,995	3,571	10,040	492	$73,810	22,299	14,339,080	(*d*)	......	315	425	61	11,430
1895..	(*d*)	....	197,334	592,000	1,988	5,239	7	1,050	23,019	14,801,720	20	$500	366	450	76	15,662
1896..	(*d*)	....	230,187	565,060	5,908	10,705	(*d*)	....	25,041	16,101,740	(*d*)	......	386	485	47	8,925

MINERAL IMPORTS OF VICTORIA. (*c*)

Year.	Coal.		Iron and Steel.	
1892..	751,538	$3,375,235	61,827	$3,687,405
1893..	611,826	2,092,420	23,141	1,753,310
1894..	550,709	977,075	22,795	1,073,520
1895..	553,343	1,005,235	42,788	1,422,400
1896*d*.	....	....	....	....

MINERAL EXPORTS OF VICTORIA. (*c*)

Year.	Coal.		Coke and Charcoal.		Gold.		Silver (Specie)
					Bullion.	Specie.	
1892..	525	$2,585	490	$12,620	$22,800	$9,221,940	$56,210
1893..	452	2,115	456	7,290	479,960	13,775,935	56,915
1894..	495	1,555	198	1,485	178,990	16,414,385	76,090
1895..	161	600	210	2,060	612,505	18,141,180	41,990
1896*d*.	......	......	......	....	....	....	....

(*a*) From *Annual Reports of the Secretary for Mines of the Colony*. (*b*) The values are not separately stated in the report, and are estimated at $20 per oz. = $643.02 per kg. (*c*) From *British Statistical Abstracts*. (*d*) Not stated in the reports.

MINERAL IMPORTS OF WESTERN AUSTRALIA. (*a*) (IN METRIC TONS AND DOLLARS; £1 = $5.)

Year.	Alkali.				Bluestone.	Brassware.	Bricks. Number.		Cement. Barrels.		Coal.	
	Soda Crystals.		Caustic Soda.	Soda Ash, Nitrate of Potash, etc.								
1892......	77	$1,235	$845	$3,090	$230	$2,700	(*g*)	b$3,560	5,363	$16,085	25,607	[illegible]
1893......	86	570	1,745	1,575	440	4,765	44,838	1,175	6,902	20,690	19,117	[illegible]
1894......	(*g*)	....	2,505	2,920	775	1,530	5,714	325	7,650	18,035	26,348	108,910
1895......	(*g*)	1,270	2,460	1,240	455	9,220	941,041	6,305	15,048	30,290	39,125	147,835
1896......	(*g*)	2,150	2,420	4,940	735	18,980	(*g*)	19,340	(*g*)	70,845	(*g*)	197,515

Year.	Coin.			Coke and Patent Fuel. Sacks.		Copper.		Earthen and Chinaware.	Glass and Glassware	Gold and Silver Leaf.
	Copper.	Silver.	Gold.			Ingot.	Rod, Sheet, and Wire.			
1892......	$600	$6,500	$50,000	1,752	$910	$90	$1,535	$37,525	$31,290	(g)
1893......	(g)	21,500	675,000	2,162	1,440	(g)	2,015	22,465	25,510	(g)
1894......	1,500	58,500	1,189,500	44	80	(g)	4,095	33,575	31,385	$475
1895......	1,850	92,000	4,540,000	c368	510	(g)	4,335	68,220	64,410	2,765
1896......	4,250	147,095	4,751,850	(g)	2,485	8,375	9,440	87,485	108,210	2,565

Year.	Iron.					Iron and Steel Wire.		Lead—Sheet, Pig and Pipe.		Marble and Stone, Wrought.	Metal Sheathing.
	Pig.		Galvanized (Corrugated Sheet).		Other Manufactures.						
1892......	294	$4,595	1,418	$104,670	$113,190	1,829	$90,012	79	$5,820	$2,540	$3,360
1893......	381	4,440	1,618	119,465	99,965	1,209	59,475	66	4,875	4,280	3,520
1894......	36	1,100	2,135	164,835	172,465	(g)	69,095	34	2,255	d1,895	(g)
1895......	c284	3,870	3,848	289,935	230,670	(g)	53,995	96	6,040	d7,140	(g)
1896......	(g)	12,455	(g)	525,050	771,945	(g)	67,715	(g)	20,250	d22,070	(g)

Year.	Mineral Oil and Turpentine. Gallons.		Nails.	Paints and Colors.	Paraffine Wax.	Plaster of Paris.		Quicksilver. Flasks.		Salt.			
										Rock. Sacks.		Other Kinds.	
1892......	239,336	$59,835	$11,840	$14,495	$4,080	(g)	....	35	$1,685	9	$20	307	$3,020
1893......	208,555	52,135	16,260	15,750	3,945	(g)	....	56	2,750	14	215	414	4,070
1894......	277,968	48,630	31,960	14,050	1,050	58	$1,035	c165	6,435	c157	90	649	8,020
1895......	495,024	82,730	47,840	17,750	2,640	52	1,050	c323	9,880	c212	595	833	9,710
1896......	(g)	159,765	120,790	45,140	3,780	(g)	3,545	(g)	20,235	(g)	260	(g)	10,690

Year.	Steel.	Stone.			Sulphur. Casks.		Tiles.	Tin.		Whiting.	Zinc, Sheet.
		Grindstones. Number.		Other Kinds.				Ingot.	Block, Foil, Plate, and Wares.		
1892......	$4,365	716	$475	$1,645	477	$2,160	(e)	$1,565	$7,595	$855	$2,610
1893......	5,610	2,006	1,780	1,325	49	380	$925	530	5,810	595	3,445
1894......	18,470	c718	680	615	c537	1,715	100	(g)	16,125	970	795
1895......	21,765	c700	660	265	c344	1,230	2,815	(g)	15,900	f1,065	3,970
1896......	82,935	(g)	2,055	1,490	(g)	720	7,585	4,090	34,395	1,950	6,295

(a) From the *Blue Books for Western Australia*, except the figures for 1896, which are from the *Annual Report of the Collector of Customs*, wherein the values only of the imports are stated. (b) Representing the values of "bricks" and "tiles." (c) Stated as number of "packages." (d) Includes "marble in the rough." (e) Value included under "bricks." (f) Corresponding to 96 metric tons. (g) Not stated in the reports.

MINERAL EXPORTS OF WESTERN AUSTRALIA. (a) (IN METRIC TONS AND DOLLARS; £1 = $5.)

Year.	Coal.		Gold.			Iron.		Mica.	Ores.						Quartz.
			Bullion—Kg.		Coin.				Copper.		Lead.		Tin.		
1892......	(d)	....	1,852	$1,131,420	(d)	10	$100	$125	576	$43,480	30	$750	269	$69,215	$31,100
1893......	6,343	$43,750	3,449	2,106,925	$100,300	(d)	.....	b20	51	3,030	(d)	.....	282	55,670	2,075
1894......	8,322	45,030	6,446	3,935,495	22,500	(d)	.....	(d)	(d)	....	(d)	.....	396	76,370	2,425
1895......	15,095	92,675	7,201	4,898,740	460	(d)	.....	b15	839	64,760	(d)	....	381	48,515	(d)
1896......	(d)	75,205	8,748	5,344,040	(d)	(d)	130	(d)	(d)	500	(d)	.....	(d)	21,690	(d)

(a) From the *Blue Books for Western Australia*, except the figures for 1896, which are from the *Annual Report of the Collector of Customs*, Perth. In 1896 there were also exported brassware, $320; silver plate, $85; and salt, $80. (b) Corresponding in 1893 to 190 kg., and in 1895 to 79 kg., respectively. (d) Not stated in the reports.

AUSTRIA-HUNGARY.

The latest official statistics of the mineral production, imports, and exports of Austria-Hungary are summarized in the following tables:

MINERAL PRODUCTION OF AUSTRIA. (a) (IN METRIC TONS AND FLORINS.)

(1 florin = 40.52 cents.)

Year.	Alum and Alum Shale.		Antimony Ore.		Arsenic Ore.		Asphalt.		Bismuth Ore.		Coal.		Lignite.	
1891......	34,394	20,750	333	42,574	4	300	180	2,808	1,083	25,476	9,192,885	32,684,692	16,183,076	30,769,036
1892......	20,480	12,863	97	11,765	*Nil.*	....	78	1,407	856	22,308	9,241,126	31,680,086	16,190,273	30,096,891
1893......	13,370	10.862	441	50,708	*Nil.*	....	88	1,301	797	21,818	9,732,651	33,549,863	16,815,955	34,048,957
1894......	10,854	13,495	696	68,632	2	100	116	1,907	570	15,194	9,572,952	33,182,691	17,332,538	32,290,005
1895......	5,716	9,955	695	55,600	*Nil.*	....	404	8,118	185	....	9,722,679	34,104,407	18,389,147	34,923,523
1896......	25,184	20,066	905	80,630	*Nil.*	....	890	11,842	*Nil.*	....	9,899,522	35,254,925	18,882,537	36,227,808

Year.	Copper Ore.		Gold Ore.		Graphite.		Iron Ore.		Iron Pyrites		Lead Ore.		Manganese Ore.	
1891......	9,316	354,574	440	14,440	21,346	693,326	1,231,244	2,854,888	2,831	48,522	18,361	1,068,512	5,279	70,742
1892......	8,636	329,824	164	14,886	20,978	637,012	998,290	2,825,088	1,210	25,292	18,265	922,260	4.558	54,830
1893......	8,576	316,282	477	43,787	23,807	637,870	1,109,111	2,482,191	1,221	25,199	10,696	849,869	5,411	58,556
1894......	7,235	278,849	86	9,907	24,121	881,980	1,214,763	2,676,114	(b)	......	12,060	836,744	5,055	55,417
1895......	7,435	286,397	104	38,997	28,443	985,771	1,884,911	2,971,884	(b)	......	12,919	863,244	4,352	41,600
1896......	6,823	273,269	416	48,412	35,972	1,216,458	1,448,615	3,446,479	(b)	......	14,563	1,058,564	3,950	34,258

Year.	Nickel and Cobalt Ore		Petroleum.		Quicksilver Ore		Salt.		Silver Ore.		Sulphur, Crude Rock		Tin Ore.	
1891......	*Nil.*	.....	122,006	492,150	70,633	1,085,560	301,422	22,639,125	14,538	3,180,882	3,088	37,204	720	3,600
1892......	0.27	.....	120,000	482,000	79,447	1,007,829	288,424	20,796,030	14,171	2,672,606	1,804	20,987	33	2,900
1893......	*Nil.*	.....	122,000	488,000	76,215	785,493	305,586	20,440,426	18,018	3,415,704	1,950	20,485	26	2,741
1894......	0.55	.....	131,930	527,720	84,127	968,754	311,597	24,281,350	18,338	3,000,171	2,485	34,484	24	2,465
1895......	*Nil.*	.....	(b)	....	86,683	797,218	278,875	23,901,782	18,118	2,294,043	839	8,298	24	2,556
1896......	*Nil.*	.....	(b)	....	83,305	778,455	308,933	22,985,858	18,701	1,921,533	643	8,271	15	2,473

Year.	Uranium Ore.		Wolfram Ore.		Zinc Ore.	
1891......	22	19,314	57	21,380	28,878	575,557
1892......	18	24,889	72	19,806	33,944	580.365
1893......	21	28,647	43	10.066	30,531	465.230
1894......	26	59,404	40	10,908	28,491	489,780
1895......	31	51,761	35	9,154	25,862	384,330
1896......	30	28,435	21	6,980	26,887	474,033

METALLURGICAL PRODUCTION. (a)

Year.	Alum.		Antimony.		Bismuth.		Copper.		Copperas.	
1891......	1,127	74,840	115	45,118	0.68	5.606	1,033	584,720	1,184	30,152
1892......	1,096	69,902	114	44,489	0.55	4,765	837	502,593	1,085	31,686
1893......	837	54,344	175	74,090	0.58	5,327	944	568,221	1,220	25,190
1894......	1,150	73,656	279	107.841	0.02	2,023	1,341	744,772	1,480	27,800
1895......	885	54,935	296	92,031	*Nil.*	......	865	460.990	160	3,393
1896......	919	56,555	422	130,532	*Nil.*	......	1,001	552,954	170	4,173

Year.	Copper Sulphate.		Gold—Kg.		Iron, Pig.		Lead.		Litharge.		Nickel and Cobalt Products.		Mineral Paint.	
1891......	198	42,286	14.0	19,272	617,145	24,881,094	7,583	1,206,104	2,267	253,058	1.05	450	838	25,350
1892......	133	24,587	13.0	17,580	630,790	24,417,266	7,252	1,125,493	2,520	393,356	0.15	196	2,022	57,429
1893......	177	35,275	35.0	52,506	663,345	24,186,083	7,212	1,103,840	2,411	352,648	0.12	163	3,020	75,329
1894......	140	28,832	61.0	96,779	742,372	26,750,603	7,570	1,113,088	2,057	301,514	0.01	156	3,002	76,379
1895......	246	49,231	75.0	116,753	660,549	22,858,237	8,085	1,204,980	2,084	297,708	*Nil.*	.....	3,164	73,632
1896......	265	52,557	69.8	98,913	698,188	23,737,250	9,769	1,527,216	1,738	271,508	*Nil.*	.....	3,979	83,760

Year.	Quicksilver.		Silver—Kg.		Sulphur.		Sulphuric Acid.		Tin.		Uranium Salts.		Zinc.	
1891......	570	1,383,682	36,037	3,219,048	45	3,416	12,268	374,576	56	63,718	4.0	45,244	5,006	1,375,076
1892......	542	1,148,320	36,658	3,293,746	53	4,338	11,038	315,433	72	85,184	2.0	28,298	5,237	1,264,587
1893......	512	1,068,515	37,344	3,330,265	44	3,618	10,248	336,509	66	76,717	5.0	74,267	5,870	1,212,709
1894......	519	1,056,718	38,246	3,031,631	76	536	9,938	264,280	80	80,860	5.0	69,742	6,810	1,268,940
1895......	535	1,168,512	40,081	2,524,998	*Nil.*	....	7,431	204,485	60	50,536	4.5	64,009	6,456	1,096,008
1896......	564	1,149,695	39,904	2,140,918	*Nil.*	....	7,972	221,182	54	45,650	4.2	47,059	6,888	1,285,391

(*a*) From *Statistisches Jahrbuch des K. K. Ackerbau Ministeriums* and *Bergwerksbetrieb Oesterreichs*, except the figures for 1896, which are from *Oesterreichische Zeitschrift für Berg- und Hüttenwesen*, No. 6, Feb. 5, 1898.
(*b*) Not stated in the report.

MINERAL AND METALLURGICAL PRODUCTION OF HUNGARY. (*a*) (IN METRIC TONS AND FLORINS.

(1 florin = 40.52 cents.)

Year.	Alum Ore.		Antimony.				Asphaltum and Asphalt Oil.		Briquettes.		Carbon Bisulphide.	
			Ore. (*b*)		Crude and Regulus.							
1891......	1,407	2,060	1,535	140,500	1,370	268,745	7,649	9,518	35,446	275,086	174	31,329
1892......	1,069	1,560	853	72,788	343	138,008	(*c*)	200,000	34,882	262,663	116	20,208
1893......	934	1,400	881	67,000	361	144,700	(*c*)	....	34,190	269,800	249	44,800
1894......	634	1,141	1,265	68,733	385	124,642	4,432	223,791	30,057	233,247	248	44,568
1895......	634	1,141	1,240	66,330	465	141,922	4,370	186,150	29,421	234,783	237	42,714
1896......	20	240	862	30,706	650	189,129	(*c*)	....	31,179	247,314	352	63,324

Year.	Coal.		Coke.		Copper.		Copperas.		Copper Sulphate.		Galena.	
1891......	1,019,352	4,990,356	17,124	167,298	247	156,552	540	10,212	19.3	10,100	218	36,200
1892......	1,052,214	5,174,772	2,129	18,951	317	165,215	595	10,233	5.3	1,871	238	40,500
1893......	982,798	5,161,900	3,188	29,300	343	174,400	762	12,300	2.3	300	214	40,500
1894......	1,037,322	5,447,201	10,250	88,767	271	135,367	795	7,950	0.8	8,000	224	38,700
1895......	1,068,046	5,640,514	12,033	11,302	286	144,240	521	2,086	(*c*)	....	80	13,600
1896......	1,132,625	5,845,791	25,550	145,396	160	77,260	522	2,086	(*c*)	....	(*c*)	....

Year.	Gold—Kg.		Iron, Pig.		Iron Pyrites.		Lead.		Lignite.	
1891......	2,183.92	3,046,440	304,701	11,525,357	57,715	250,349	2,178	350,230	2,427,126	7,713,443
1892......	2,246.77	3,134,437	309,494	11,690,952	56,050	236,097	2,335	412,558	2,741,391	8,085,417
1893......	2,000.00	2,790,200	319,362	12,103,200	68,189	277,900	2,514	348,600	2,917,899	9,394,300
1894......	2,687.07	4,497,627	312,148	11,216,865	76,870	334,000	2,113	295,015	3,181,071	10,301,700
1895......	3,187.27	4,869,959	322,206	11,802,398	69,195	280,400	2,277	323,174	3,517,901	11,214,391
1896......	3,208.04	5,259,855	384,345	11,942,008	(*c*)	....	1,911	246,520	3,773,728	12,472,766

Year.	Litharge.		Manganese Ore.		Mineral Paints.		Nickel and Cobalt.				Petroleum.	
							Ore.		Products.			
1891......	351	60,988	2,233	2,357	221	8,820	....	....	58	29,240	726	23,800
1892......	507	93,884	786	8,340	263	10,508	340	29,240	58	20,272	14	690
1893......	227	39,600	1,238	1,800	321	8,600	202	18,700	202	18,700	20	690
1894......	689	117,512	3,748	6,700	608	13,858	25	8,106	23	9,374	2,061	66,100
1895......	615	119,592	3,381	1,500	371	11,211	55	21,182	18	5,429	2,083	70,300
1896......	466	77,096	(*c*)	....	334	6,010	46	45,152	18	7,333	2,168	54,011

Year.	Quicksilver—Kg.		Salt.		Silver—Kg.		Sulphur.		Sulphuric Acid.		Zinc Blende	
1891......	8,631	19,385	162,891	14,169,212	16,736.6	1,506,294	40	3,392	2,230	60,387	127	2,650
1892......	7,853	15,641	176,368	15,706,027	18,423.8	1,658,143	42	3,778	3,340	54,968	116	2,825
1893......	2,500	4,800	167,209	14,605,000	23,631.0	2,120,000	70	5,900	2,337	36,700	77	1,050
1894......	1,337	4,699	169,282	14,908,000	20,155.0	1,217,186	98	7,809	4,018	57,046	(c)	......
1895......	1,129	2,400	169,395	13,451,000	20,432.3	1,231,584	102	7,826	4,228	91,500	(c)	......
1896......	1,100	2,236	(c)	....	19,839.3	1,173,625	138	7,331	4,337	63,324	(c)	......

(a) From *Magyar Statisztikai Evkönyv*, except the figures for 1896, which are from *Oesterreichische Zeitschrift für Berg- und Hüttenwesen*. (b) This does not include the ore produced in Hungary from which the metallurgical products given in the table were derived. It gives only the amount of ore which was sold, and presumably was not smelted in the country. (c) Not stated in the report.

MINERAL IMPORTS OF AUSTRIA-HUNGARY. (a) (IN METRIC TONS AND FLORINS.)

(1 florin = 40.52 cents.)

Ye ır.	Alum.		Aluminum and Alloys.		Amber.		Ammonia.				Ammoniacal Liquor.		Antimony.			
							Muriate and Sulphate of.		Caustic.				Ore.		Regulus. Kg.	
1892......	159.4	15,940	48.3	209,754	54.5	815,800	231.6	74,658	34.4	5,160	476.1	7,142	24.1	6,748	2,100	1,092
1893......	229.0	20,610	48.3	163,509	63.2	986.840	230.4	70,928	53.9	6,468	856.3	12,845	36.2	4,344	2,400	1,128
1894......	404.0	40,400	32.2	74,760	65.7	990,010	227.1	78,016	69.6	9,048	1,048.0	15,720	71.6	8,592	1,300	481
1895......	338.5	30,465	47.8	98,330	81.8	1,379,270	305.1	100,797	103.4	13,442	876.7	13,151	15.0	3,150	2,100	777
1896......	359.5	32,355	50.3	94,790	63.6	862,400	322.7	116,866	71.1	9,243	506.9	7,604	15.5	3,255	700	231

Year.	Arsenic, Arsenious Acid, and Sulphide.		Asbestos.				Asphalt.				Barytes and Baryta-White.	
			Crude.		Manufactured.		Crude, Rock.		Mastic and Bitumen.			
1892......	267.1	60,684	111.9	11,992	154.5	151,116	3,264	145,721	594	41,559	4,606	116,478
1893......	287.8	67,144	196.5	26,430	150.8	157,680	3,156	130,391	1 140	79,821	4,468	114,692
1894......	320.0	74,516	555.8	63,541	108.7	158,090	3,918	72,256	768	53,060	4,876	92,350
1895	292.5	67,369	431.6	56,550	108.3	110,175	2,410	44,878	872	52,326	5,096	134,565
1896......	309.2	76,318	185.2	29,526	165.1	167,615	4,715	77,952	1,621	89,145	5,377	142,125

Year.	Borax.				Brass, German Silver and Tombac				Brass.			
	Crude, and Boracic Acid.		Refined.		Crude, Old, and Remnants.		Bars, Sheets, Wire, etc.		Crude and Old.		Bars, Sheets, etc.	
1892......	852	99,017	48.5	16,005	2,018	871,000	52.5	34,090	1,696	678,320	36.6	24,725
1893......	1,451	183,004	34.4	11,008	2,081	894,210	52.6	50,909	1,750	700,120	35.4	23,969
1894......	1,320	158,364	64.1	17,948	2,286	894,698	72.7	34,686	1,955	723,461	52.8	34,576
1895......	1,908	282,883	61.9	14,237	2,742	1,166,927	131.4	63,425	2,246	909,673	112.3	67,420
1896......	1,363	208,055	76.5	17,595	3,118	1,345,163	113.4	58,398	2,417	966,960	89.9	53,266

Year.	Calamine and Other Zinc Ores.		Cement.		Chloride of Lime.		Chrome Ore.		Coal and Briquettes.		Coke and Briquettes.	
1892......	3,481	159,933	25,439	458,315	1,015.7	91,413	1	35	3,352,181	21,664,013	254,000	2,478,090
1893......	3,739	93,604	36,874	665,939	702.4	56,192	570	19,950	3,840,874	25,556,342	309,861	3,144,396
1894......	6,760	214,663	33,286	599,832	53.9	4,312	1,081	51,624	4,048,477	26,185,871	437,299	4,389,109
1895......	7,691	312,891	32,012	514,413	27.7	2,216	1,827	94,905	4,503,003	27,790,484	533,402	5,605,287
1896......	9,022	297,946	35,290	566,240	1.3	104	1,891	104,005	5,174,321	31,390,639	491,028	5,110,035

Year.	Colored Earths.		Copper.						Copperas.		Copper Sulphate.		Copper and Iron Vitriol, Mixed.	
			Ore.		Crude and Old.		Bars, Sheets, Wire, etc.							
1892......	3,461	119,920	909.3	345,534	8,644	5,177,895	166.9	121,691	1,424.4	42,732	648.7	123,253	55.2	5,520
1893......	4,827	167,892	637.9	210,507	11,822	7,014,931	113.8	84,926	799.8	21,596	1,862.6	335,268	81.3	7,317
1894......	4,205	144,696	24.8	2,976	13,383	7,286,434	97.2	66,375	717.8	18,663	1,916.4	325,788	85.6	7,704
1895......	4,244	145,183	81.0	3,720	11,747	6,922,160	97.9	72,106	871.1	18,068	895.3	170,107	56.2	5,058
1896......	4,362	145,840	0.7	56	13,666	8,372,122	126.2	98,256	575.5	8,633	2,084.4	449,987	40.0	3,600

Year.	Cryolite.		Double Sulphate of Sodium.		Fertilizers, Mineral.		Fluorspar.		Glass.					
									Enamel and Glazed Ware.		Remnants.		Manufactures.	
1892......	201.2	55,660	90.7	12,698	8,100	244,029	3,112	49,198	183.2	78,445	4,848	76,099	3,469	1,771,000
1893......	230.8	55,552	114.6	16,044	8,958	768,731	3,010	43,908	186.5	74,690	4,719	82,592	3,422	1,570,000
1894......	219.0	54,196	140.5	16,860	10,217	306,519	3,618	88,745	198.4	79,636	4,736	82,892	4,177	1,754,000
1895......	229.4	120,485	137.2	6,860	8,929	267,858	3,528	86,886	236.1	94,440	4,218	73,727	4,088	1,976,000
1896......	265.5	139,300	144.1	7,205	9,658	289,728	3,821	94,267	255.8	102,320	3,744	65,515	3,989	2,119,000

Year.	Glauber Salt.		·Gold.						Gold and Silver Coin.	Graphite.	
			Bullion—Kg.		Old and Dross. Kg.		Coin—Kg.				
1892......	5,889.4	134,736	21,808	32,599,910	8,978	522,600	29,290	41,080,770	1,120	730.7	34,277
1893......	6,687.6	167,191	48,255	74,181,800	10,621	946,036	47,856	68,397,640	1,300	854.5	39,541
1894......	8,508.4	217,723	3,827	5,950,830	122	50,200	17,407	25,409,812	2,184	732.9	36,645
1895......	6,617.5	132,350	5,223	8,053,617	608	190,725	29,271	41,378,667	6,264	639.6	26,066
1896......	4,678.1	81,867	13,053	19,398,565	101	43,150	29,620	41,018,288	3,002	1,008.6	34,403

Year.	Gypsum.				Iron.							
	Crude.		Burned.		Ore.		Pyrites.		Pig and Old.		Manufactures.	
1892......	1,441	15,851	7,925	161,140	71,679	720,082	32,261	387,132	66,097	2,185,000	16,010	7,442,000
1893......	862	9,478	8,074	161,486	73,248	814,996	45,530	546,360	75,622	2,491,000	23,323	8,982,000
1894......	1,375	15,130	10,629	265,725	88,252	927,746	59,685	634,338	133,849	3,957,000	20,171	9,334,000
1895......	850	9,350	10,916	272,909	117,600	1,345,728	54,610	655,314	175,400	5,127,000	23,078	9,976,000
1896......	821	9,032	11,736	258,181	107,018	1,327,983	50,691	608,289	148,217	5,143,000	21,910	10,646,000

Year.	Iron and Steel. Bars, Sheets, Wire, etc.		Jet—Kg.		Lead.							
					Red Oxide and Yellow.		White.		Ore.		Alloys, Crude.	
1892......	18,275	1,754,000	750	12,000	420.4	92,488	333.6	106,752	354.8	26,433	7,121	924,118
1893......	22,725	2,009,000	850	12,240	283.7	56,740	304.4	91,320	298.7	21,507	5,925	725,790
1894......	24,318	2,058,000	550	6,875	470.2	94,040	243.4	68,152	290.4	19,602	8,842	1,038,914
1895......	30,909	2,556,000	600	7,500	371.3	74,260	187.5	46,406	416.4	32,479	8,974	1,166,607
1896......	27,809	2,685,000	940	11,750	431.7	82,023	156.1	34,734	540.2	39,485	7,221	974,849

Year.	Lead—*Continued.*				Lignite, Brown Coal, and Briquettes.		Lime, Crude and Burned, Inclusive of Caustic and Hydraulic.		Litharge.		Lithographic Stone.	
	Bars.		Ash—Kg.									
1892......	232.5	39,525	700	35	18,378	96,093	27,499	251,079	316.1	60,059	470.9	44,736
1893......	262.8	40,078	3,200	160	20,111	108,905	26,218	233,652	316.1	60,059	751.2	71,364
1894......	200.3	30,045	500	25	17,453	94,247	26,571	234,825	358.7	64,644	670.8	63,726
1895......	207.9	41,580	900	45	16,797	90,702	19,726	145,087	355.5	63,990	683.9	67,707
1896......	218.3	39,294	2,500	200	19,981	107,898	23,455	197,098	233.4	44,346	647.3	64,083

Year.	Magnesium.				Manganese Ore.		Marble.		Meerschaum.		Millstones.	
	Sulphate.		Chloride.									
1892......	23.2	928	872.1	43,605	518.9	18,162	1,989	58,176	175.5	466,305	807.8	113,092
1893......	53.8	2,152	1,333.9	66,666	354.2	11,866	1,816	54,480	200.5	529,850	1,147.7	160,678
1894......	47.7	1,908	1,147.8	55,095	2,444.5	95,011	1,888	56,634	229.1	620,250	1,160.4	162,456
1895......	48.7	1,948	1,353.4	54,136	2,772.3	98,329	1,886	56,592	185.1	522,700	1,229.5	172,130
1896......	53.7	2,148	1,333.0	53,320	7,371.3	264,044	2,347	70,398	202.1	454,520	1,204.9	168,686

Year.	Mineral Oil.				Muriatic Acid.		Nickel.				Nitrate of Soda.	
	Crude.		Refined.				Crude and Old.		Sheet, Wire, etc.			
1892......	185,568	4,130,545	14,466	1,013,242	459.8	9,196	29.9	71,760	5.3	13,984	28,071	3,067,821
1893......	147,061	4,832,842	16,764	1,222,298	437.6	8,752	29.6	69,443	11.0	28,561	37,627	4,327,049
1894......	126,159	4,430,006	17,019	1,289,322	498.0	9,952	130.5	261,000	2.8	7,250	39,522	4,149,791
1895.	120,479	6,078,067	16,876	1,416,150	466.7	9,334	168.4	255,968	4.9	14,240	43,059	4,521,176
1896......	69,018	2,822,506	17,943	1,308,280	528.8	10,576	160.7	252,299	5.2	13,360	33,086	3,308,630

Year.	Nitric Acid.		Non-Precious Metals, Manufactures of.		Ozokerite.		Phosphorus and Phosphoric Acid.		Polishing Stones, Whetstones, etc.		Porcelain Earth and Feldspar.	
1892......	19.6	3,332	1,398	2,812,000	(b)	....	199.7	229,550	3,767	277,233	3,777	121,407
1893......	19.0	3,230	1,579	3,065,000	10.0	3,200	238.1	285,720	3,487	257,713	4,146	133,755
1894......	19.3	3,281	1,732	3,205,000	(b)	....	334.8	401,760	3,678	269,816	5,798	172,913
1895......	16.0	2,240	1,890	3,626,000	2.2	688	206.1	247,320	3,559	265,978	6,532	190,383
1896......	20.7	2,898	1,979	3,708,000	2.0	600	223.9	268,680	3,851	289,022	7,425	206,653

Year.	Potash.		Potassium.				Potters' and Other Clays.		Quartz and Quartz Sand.		Quicksilver. Kg.	
			Chloride.		Chromate.							
1892......	164.2	31,763	1,944	155,560	86.7	32,946	27,776	277,758	45,479	315,235	2,050	3,608
1893......	208.3	41,727	1,869	144,824	199.1	71,676	25,149	251,487	50,464	347,874	3,400	7,820
1894......	102.1	18,679	2,406	186,426	75.9	34,155	24,981	249,818	61,544	436,737	11,100	18,426
1895......	285.4	58,590	2,679	200,888	29.5	12,685	27,498	249,254	58,494	411,225	4,200	8,316
1896......	987.3	164,863	2,475	185,608	34.1	14,663	30,072	270,645	59,150	449,831	1,300	2,418

Year.	Salt.		Silver.						Slag and Slag Wool.		Slate, Roofing and Other.	
			Bullion—Kg.		Old and Dross—Kg		Coin—Kg.					
1892......	27,896	278,892	82,058	5,572,755	6,071	19,590	60,340	3,523,400	3,622	17,021	16,335	991,000
1893......	26,610	268,088	57,340	3,497,965	400	4,150	58,550	3,362,823	1,659	7,799	18,887	1,147,000
1894......	32,829	333,828	73,140	3,705,004	4,210	73,620	56,010	2,359,440	1,065	5,008	17,607	1,069,000
1895......	40,396	405,859	49,870	2,482,147	60	1,740	4,260	212,582	981	4,612	15,667	952,000
1896......	53,680	537,367	138,420	7,219,890	550	2,150	5,320	304,160	240	1,129	15,932	970,000

Year.	Soda.				Sodium Chromate.		Stone.				Sulphur.	
	Caustic.		Crude and Crystallized.				Paving.		Not Elsewhere Specified.			
1892......	1,413	185,042	197.0	6,896	147.3	48,609	18,564	222,768	64,074	967,880	13,900	799,263
1893......	1,447	173,586	94.6	3,312	183.6	56,916	10,607	127,285	71,302	1,141,767	13,090	621,776
1894......	1,668	166,974	258.2	9,038	248.4	94,392	24,860	248,598	97,609	1,161,016	14,410	684,482
1895......	1,155	112,567	39.9	1,197	152.7	53,445	5,459	54,590	79,869	822,608	14,709	661,902
1896......	632	61,659	57.5	1,725	40.3	14,105	8,476	84,759	87,796	726,818	15,221	684,945

Year.	Sulphuric Acid.		Tin.				Tombac.		Zinc.			
			Ingot, Crude, Old, etc.		Salt.				Metal.		Bars, Sheets, Wire, etc.	
1892......	1,908.7	58,401	2,406	2,869,862	34.5	26,015	4.0	2,000	13,870	3,396,691	713.8	201,360
1893......	2,090.4	62,712	2,929	3,281,272	72.1	54,075	40.9	20,450	15,088	3,318,348	452.3	122,979
1894......	1,530.4	46,656	3,136	2,823,456	84.7	59,290	13.5	6,345	15,815	3,189,519	979.0	245,517
1895......	1,566.0	43,053	3,038	2,430,745	46.0	28,520	15.4	7,238	17,156	3,053,715	611.0	148,097
1896......	3,521.8	96,850	3,344	2,455,002	27.7	15,789	324.4	152,468	17,539	3,507,720	551.6	144,236

(a) From *Statistik des Auswärtigen Handels des Oesterreichisch-Ungarischen Zollgebiets im Jahre.* Wien, 1896. Although the present monetary system of Austria-Hungary, inaugurated in 1892, has for its unit the crown, the florin of the former system still continues in use during the transitional period, and the imports, exports, and production are stated in florins in the Austrian and Hungarian statistical publications. Since 1892 the florin is accepted as equivalent in value to two crowns, the value of the gold crown being 20.26 cents in United States money, while the silver crown is equal to 17.4 cents at the United States coining rate. The present value of the florin in gold is therefore equal to 40.52 cents in United States money, which equivalent should be used for converting the values in the table into United States currency. (b) Not reported.

MINERAL EXPORTS OF AUSTRIA-HUNGARY. (*a*) (IN METRIC TONS AND FLORINS.)

(1 florin = 40.52 cents.)

Year.	Alum.		Aluminum and Alloys.		Amber.		Ammoniacal Liquor.		Antimony.				Arsenic, Arsenious Acid, and Orpiment.	
									Ore.		Regulus.			
1892......	79.3	6,344	8.3	23,403	8.0	240,000	361.9	5,429	106.9	33,139	305.9	152,950	3.7	994
1893......	105.1	7,885	19.5	34,920	6.7	206,700	386.2	5,793	100.3	22,066	230.4	106,680	5.3	1,416
1894......	107.0	8,829	1.4	3,010	5.7	181,200	323.0	4,845	87.9	19,338	354.6	130,564	3.5	941
1895......	59.6	5,068	0.2	350	6.9	144,000	412.6	6,189	193.5	42,570	368.9	129,115	6.4	1,655
1896......	47.0	3,995	(b)	....	6.7	185,400	603.7	9,056	218.0	47,960	440.7	143,228	26.1	6,616

Year.	Asbestos.				Asphalt.				Barium Sulphate.		Borax.			
	Crude.		Manufactured.		Rock and Earth.		Mastic and Bitumen.				Crude, and Boracic Acid.		Refined.	
1892......	77.9	5,105	8.8	7,000	287.0	9,339	327.8	32,780	178.0	16,857	29.8	13,410	195.8	66,442
1893......	234.4	17,996	5.8	8,000	245.7	8,084	594.9	59,490	224.1	19,808	67.7	20,310	47.6	16,184
1894......	118.2	8,416	6.8	14,000	376.1	11,858	985.6	98,560	277.7	25,879	28.1	8,430	26.7	8,010
1895......	122.2	12,569	9.7	15,000	145.8	2,915	1,183.1	29,579	391.6	21,522	30.9	9,270	14.1	3,948
1896......	48.5	4,988	9.8	20,000	134.1	2,642	1,692.2	42,304	202.7	16,733	5.7	1,767	1.5	405

Year.	Brass, German Silver, and Tombac.		Calamine and Other Zinc Ores.		Cement.		Chloride of Lime.		Chrome Ore.		Clay Wares.	
1892......	970.4	1,072,000	12,578	363,677	21,187	308,186	38.4	3,840	292.8	15,079	39,435	7,764,000
1893......	935.0	922,000	7,578	200,344	21,262	303,217	216.4	19,476	326.8	19,608	44,460	8,841,000
1894......	966.2	926,000	6,979	187,680	16,856	274,866	314.3	26,244	240.8	15,582	50,339	7,980,000
1895......	1,286.8	920,000	7,491	269,676	12,804	180,492	266.7	22,136	384.6	24,999	51,767	8,014,000
1896......	1,580.5	1,102,000	9,453	378,104	16,721	238,228	113.8	9,559	142.1	9,237	67,270	8,591,000

Year.	Coal and Briquettes.		Cobalt and Nickel Ores.		Coin.				Coke and Briquettes.		Colored Earths.	
					Gold—Kg.		Silver—Kg.					
1892......	653,667	4,997,163	194.4	19,440	8,540	12,232,360	79,420	4,280,738	87,745	1,125,329	2,401	87,862
1893......	648,424	4,980,779	304.9	30,490	9,450	13,840,205	86,979	4,314,772	108,576	1,482,878	2,330	88,155
1894......	629,670	4,843,901	129.1	12,007	15,266	22,455,120	102,010	4,228,926	110,460	1,504,569	2,580	95,952
1895......	640,963	4,888,839	138.6	27,720	15,452	21,886,245	47,275	2,014,565	119,051	1,618,155	2,244	86,453
1896......	658,368	5,001,742	113.1	23,186	23,926	33,388,428	182,950	7,688,706	116,608	1,550,016	1,700	64,565

Year.	Copper.								Cryolite.		Fluorspar.	
	Ore.		Crude and Old.		Bars, Sheets, Plates, etc.		Sulphate.					
1892......	1.9	57	343.0	185,220	241.4	183,975	21.9	4,601	13.9	2,598	35,209	880.786
1893......	13.7	411	434.5	234,630	248.0	180,127	28.7	5,740	2.9	660	221	6,463
1894......	15.3	459	254.8	129,948	469.1	319,266	48.7	9,499	15.9	2,520	70	1,829
1895......	16.6	1,328	151.1	86,127	353.8	250,426	61.9	33,999	10.9	5,585	44	1,252
1896......	12.4	992	227.8	134,402	199.2	148,717	46.9	10,553	2.3	1,235	40	1,272

Year.	Glass.				Glauber Salt.		Gold.					
	Remnants.		Manufactures.				Ore.		Bullion—Kg.		Old, Remnants, and Dross—Kg	
1892......	1,670	29,393	44,007	18,305,000	77.0	2,850	66.4	5,312	80	76,000	43,714	708,410
1893......	1,604	28,070	45,040	18,296,000	570.5	17,400	73.2	5,856	847	1,278,970	44,667	224,790
1894......	1,568	27,445	47,507	19,276,000	692.1	20,097	(*b*)	....	85	82,450	38,478	227,680
1895......	1,070	18,725	50,843	23,048,000	660.8	19,163	1.1	440	306	338,620	116,911	582,480
1896......	1,638	28,669	52,752	24,293,000	2,290.8	51,543	45.5	7,280	381	445,770	131,942	581,120

Year.	Graphite.		Gypsum.		Iron.							
					Pyrites.		Sulphate.		Ore.		Pig, Old, etc.	
1892......	11,985	645,421	2,736	50,400	6,833	79,011	416.5	19,992	108,120	864,959	11,569	517,000
1893......	11,536	627,916	2,360	41,933	3,042	36,500	476.2	20,240	106,259	743,814	12,461	487,000
1894......	11,536	442,374	2,430	42,781	597	8,062	256.3	7,049	144,309	1,010,164	11,583	467,000
1895......	11,928	500,262	5,069	163,014	383	5,178	300.6	6.915	165,402	1,488,615	9,786	441,000
1896......	13,091	549,190	2,275	40,157	341	4,605	391.6	7,832	214,390	1,929,509	11,712	510,000

Year.	Iron—*Continued*		Iron and Steel. Bars, Sheets, Wire, etc.		Lead.						Lignite and Briquettes.	
	Manufactures.				Ore.		Metal and Alloys.		White.			
1892......	16,010	7,442,000	8,700	952,000	3,784	120,565	174.9	27,132	168.9	64,182	6,748,844	23,180,147
1893......	23,323	8,982,000	13,699	1,298,000	1,606	112,589	232.6	35,499	180.5	64,980	6,763,181	23,844,949
1894......	20,171	9,384,000	10,963	989,000	1,232	86,219	242.4	35,512	132.2	47,592	6,902,494	23,412,076
1895......	23,078	9,976,000	9,993	1,732,000	3,758	225,618	207.8	33,197	232.7	79,118	7,143,234	23,902,409
1896......	21,910	10,646,000	12,423	2,175,000	3,076	215,318	272.3	47,006	171.0	54,720	7,562,721	24,320,812

Year.	Lime.				Litharge.		Manganese Ore.		Marble.		Meerschaum.	
	Crude, Unburned (Limestone).		Hydraulic, Burned, etc.									
1892......	14,432	72,161	59,784	668,287	1,333.7	280,078	3,768	108,729	2,389	71,682	50.8	187,661
1893......	28,019	140,098	66,543	741,966	1,310.7	275,247	3,697	91,750	2,638	79,152	74.3	272,450
1894......	38,318	191,592	63,526	698,789	1,466.3	309,030	2,099	52,509	2,823	84,684	53.6	223,050
1895......	33,479	167,398	34,698	381,675	781.7	156,340	425	14,888	2,737	82,113	45.6	196,555
1896......	23,249	116,245	44,642	491,060	597.0	119,400	701	21,740	3,595	107,838	52.1	186,018

Year.	Millstones.		Mineral Oil.				Muriatic Acid.		Nitric Acid.		Non-Precious Metals, Manufactures of (Exclusive of Iron).	
			Crude.		Refined.							
1892......	1,724	275,888	576.0	20,161	388.4	24,278	1,876	53,783	479.3	92,149	3,304	6,604,000
1893......	2,076	332,112	613.0	21,456	306.6	17,632	1,841	53,047	387.7	74,647	3,436	6,761,000
1894......	1,858	296,400	974.7	34,117	207.7	13.505	1,908	51,196	400.7	64,926	3,686	7,107,000
1895......	1,977	296,490	1,454.3	54.344	3,362.7	280,123	1,460	31,832	418.1	69,188	3,807	6,854,000
1896......	1,831	274,605	1,814.7	51,811	23,106.2	993,567	1,246	25,090	359.8	59,520	4,362	7,360,000

Year.	Other Earths and Mineral Substances.		Other Non-Precious Metals, in Bars, Sheets, Wire, etc		Other Ores, Not Specified.		Ozokerite.		Peat and Peat Coke.		Porcelain Earth and Feldspar.	
1892......	35,019	1,400,756	109.2	113,000	905.0	136,482	6,444	1,868,731	5,101	35,704	47,174	1,483,921
1893......	32,616	1,304,624	92.3	109,000	619.3	81,438	4,660	1,351,400	5,441	39,718	49,816	1,623,429
1894......	28,172	1,126,880	171.0	162,000	1,041.1	136,773	5,166	1,483,678	3,823	27,906	53,698	1,304,979
1895......	58,853	2,354,108	112.7	116,000	1.007.8	132,526	5,054	1,498,942	3,753	27,395	56,908	1,606,557
1896......	25,803	1,032,108	101.9	100,000	702.8	56,224	5.722	1,916,708	2,701	19,715	67,381	2,241,422

Year.	Potash.		Potassium Chlorate.		Potters' and Other Clays.		Precious Metals, in Wire and Sheets. Kg.		Quartz and Quartz Gravel and Sand.		Quicksilver.	
1892......	6,001	1,094,145	924.7	92,470	30,882	308,815	75	33,750	12,256	89,959	465.4	1,000,610
1893......	7,300	1,355,166	1,118.0	111,800	31,307	313,066	44	17,600	9,882	72,304	414.4	953,120
1894......	8,189	1,363,074	627.4	48,987	33,008	330,075	16	6,400	26,748	199,799	509.5	881.435
1895......	5,665	966,586	1,073.9	75,173	37,667	376,665	150	39,000	30,218	226,082	498.3	976,734
1896......	4,164	706,084	1,026.2	71,834	41,276	417,759	129	38,540	32,844	246,818	569.4	1,059,084

Year.	Salt.		Saltpeter.				Silver.					
			Crude.		Refined.		Ore.		Bullion—Kg.		Old and Dross Kg.	
1892......	10,088	151,326	10.6	1,272	17.3	4,498	23.1	2,772	842	21,888	126,550	466,250
1893......	7,678	115,175	15.4	1,926	69.6	16,704	14.4	1,152	584	34,166	115,684	264,366
1894......	6,811	102,167	121.1	13.019	52.0	11,960	0.1	7	1,660	74,980	151,740	220,800
1895......	6,554	98,318	148.7	17,102	224.1	56,025	....	....	2,180	96,915	88,770	133,730
1896......	11,811	177,170	54.9	5,765	159.7	39,925	16.0	2,080	2,360	107,380	123,220	192,380

Year.	Slag and Slag Wool.		Soda.		Stone.						Sulphur.	
					Paving.		Lithographic		Not Elsewhere Specified.			
1892......	49,647	337,597	1,319.0	92,142	38,948	564,750	18.1	2,264	210,127	1,812,046	473.6	35,524
1893......	45,478	309,253	931.5	55,702	36,728	532,559	9.0	1,127	226,555	1,998,965	1,507.8	79,159
1894......	58,219	395,891	666.5	39, 61	41,328	599,260	27.8	3,477	321,167	2,660,915	1,231.6	64,660
1895......	52,688	421,504	1,781.2	90,874	29,392	426,187	3.6	452	241,040	1,455,482	989.3	50,136
1896......	83,187	665,500	2,914.1	16,270	30,577	443,369	5.7	718	216,666	1,324,424	1,230.9	62,056

Year.	Sulphuric Acid.		Tin.				Zinc.					
			Ingot and Old.		Bars, Plates, Sheets, etc.		White.		Metal.		Sheets, etc.	
1892......	2,855.0	238,047	90.2	185,220	53.6	69,144	1,510.3	392,678	591.2	162,693	850.7	254,309
1893......	3,906.1	324,105	78.7	234,630	71.6	87,352	2,148.4	515,616	717.6	182,969	1,225.3	325,890
1894......	8,209.8	360,307	78.0	129,948	104.2	102,116	1,626.2	390,288	446.7	89,340	1,201.7	312,425
1895......	6,465.5	219,637	53.2	86,127	90.4	76,840	1,688.1	371,382	503.8	94,463	1,157.7	293,069
1896......	6,211.7	197,449	130.2	134,402	77.7	63,714	1,825.3	383,313	1,256.2	238,678	1,139.2	315,473

(a) From *Statistik des Auswärtigen Handels des Oesterreichisch-Ungarischen Zollgebeits im Jahre*, Wien, 1896. (b) Not reported.

MINERAL PRODUCTION OF BOSNIA. (*a*) (IN METRIC TONS AND FLORINS.)

Year.	Antimony, Crude.		Chrome Ore.		Copper.		Iron, Pig.		Lead-Silver Ore.		Lignite.	
1891......	27	2,720	918	10,030	160	32,000	987	11,200	109	2,280	77,266	66,160
1892......	91	6,240	1,296	14,411	140	26,602	3,178	41,860	41	1,680	85,449	76,049
1893......	3	198	965	19,996	101	19,796	2,816	36,613	(*b*)	....	118,268	113,434
1894......	(*b*)	....	1,808	30,890	270	135,197	3,287	107,477	(*b*)	....	160,800	414,100
1895......	(*b*)	....	707	(*b*)	105	(*b*)	2,569	(*b*)	(*b*)	....	195,422	(*b*)
1896......	(*b*)	....	443	13,566	206	(*b*)	10,120	295,158	(*b*)	....	222,724	469,674

Year.	Manganese Ore.		Quicksilver.		Salt.		Zinc Ore.	
1891......	8,847	58,000	5.2	5,560	5,970	167,660	47	188
1892......	7,944	51,203	0.3	281	8,006	224,000	16	64
1893......	7,403	44,265	0.2	600	8,517	238,476	(*b*)	......
1894......	6,588	104,085	(*b*)	......	10,250	779,000	(*b*)	......
1895......	8,145	(*b*)	(*b*)	......	12,758	(*b*)	(*b*)	......
1896......	68,211	112,548	(*b*)	......	137,199	(*b*)	(*b*)	......

(*a*) From *Oesterr. Zeits. für Berg-, Hütten-, und Salinenwesen.* Besides the substances specified in the table there was also produced: Antimony ore, in 1891, 108 tons; 1892, 276 tons; quicksilver ore, in 1891, 88 tons; 1892, 3.5 tons. In 1893: Quicksilver ore, 0.886 tons; copper ore, 2,865 tons; iron ore, 6,874 tons; antimony ore, 0.089 tons; fahl ore, 0.318 tons; iron pyrites, 0.700 tons; coal, 122,396 tons; iron (pig), 45.16 tons; and salt, 85.51 tons. (*b*) Not reported.

BELGIUM.

The most important articles of mineral production in Belgium are coal, iron, lead, zinc, manganese ore, and phosphate of lime. Developments in these industries are described specifically under the respective captions elsewhere in this volume. The official statistics of production, imports and exports are summarized in the following tables:

MINERAL PRODUCTION OF BELGIUM. (*a*) (IN METRIC TONS AND DOLLARS; 5 f. — $1.)

Year.	Blende.		Calamine.		Iron Ore.		Iron Pyrites.		Lead Ore.		Manganese Ore.		Totals.
1892........	8,250	$126,880	4,010	$49,440	209,943	$218,620	2,570	$5,480	60	$1,640	16,775	$41,660	$443,720
1893........	7,300	83,720	4,010	43,440	284,465	295,580	6,301	9,800	67	1,520	16,690	40,100	474,160
1894........	7,570	76,000	4,015	39,700	311,222	316,440	3,050	5,980	160	3,380	22,048	55,540	497,040
1895........	8,080	72,510	4,150	40,340	312,687	296,090	3,510	7,230	220	5,100	22,478	57,254	478,524
1896........	7,070	71,280	4,560	48,970	307,031	283,564	2,560	5,370	70	1,610	23,265	69,004	479,730

PRODUCTION OF MINERAL FUEL IN BELGIUM.

Year.	Coal.							Coke.		
	Quantity. Metric Tons.	Value.		Profit.		Number of Workmen.	Average Annual Wages.	Ovens. Active.	Number of Workmen.	Consumption of Coal. Metric Tons
		Total.	Per Ton	Total.	Per Ton					
1892........	19,583,173	$40,257,600	$2.06	$2,352,400	$0.124	118,578	$191	3,576	2.280	2,497,421
1893........	19,410,519	36,281,180	1.87	1,279,000	.066	116,861	177	3,310	2,251	2,284,796
1894........	20,534,501	38,258,420	1.86	1,619,560	.078	117.103	188	3,201	2,108	2,381,896
1895........	20,457,604	38,671,540	1.89	1,659.480	.082	118,957	189	3,233	2,130	2,358,653
1896........	21,252,370	40,402,020	1.90	2,179,400	.102	119,246	196	3,555	2,415	2,709,720

Year.	Coke—*Continued.*			Briquettes from Coal.					
	Quantity. Metric Tons.	Value.		Number of Works, Active.	Number of Workmen.	Consumption of Coal. Metric Tons	Quantity. Metric Tons.	Value.	
		Total.	Per Ton					Total.	Per Ton
1892........	1,832,257	$5,372,177	$2.84	34	(*b*)	(*b*)	1,146,480	$2,827,220	$2.47
1893........	1,683,702	4,488,750	2.67	36	(*b*)	(*b*)	1,256,265	2,836,566	2.26
1894........	1,756,622	4,546,138	2.59	37	(*b*)	(*b*)	1,326,226	3,095,411	2.33
1895........	1,749,109	4,810,050	2.75	38	(*b*)	(*b*)	1,217,795	2,956,806	2.43
1896........	2,004,480	5,700,599	2.84	36	1,334	1,092,340	1,213,760	2,910,596	2.40

METALLURGICAL PRODUCTION OF BELGIUM. (*a*) **(IN METRIC TONS AND DOLLARS; 5 f. = $1.)**

Year.	Iron.								
	Forge Pig.			Foundry Pig.			Bessemer Pig.		
	Quantity.	Value.		Quantity.	Value.		Quantity.	Value.	
		Total.	Per Ton		Total.	Per Ton		Total.	Per Ton
1892........	442,009	$4,045,800	$9.15	67,296	$647,600	$9.62	190,599	$2,494,800	$13.09
1893........	428,480	3,855,460	9.00	74,630	711,760	9.54	165,077	1,913,620	11.59
1894........	378,045	3,525,100	9.32	80,110	757,200	9.45	170,420	1,948,440	11.43
1895........	329,750	2,949,180	8.94	85,450	747,560	8.75	161,606	1,809,020	11.07
1896........	362,451	3,734,840	10.30	84,275	805,880	9.56	193,518	2,284,720	11.81

Year.	Iron, Crude—*Continued.*						Iron, Manufactures of.			
	Thomas Pig.			Total Pig.			Bar, Crude.		Rails.	
	Quantity.	Value.		Quantity.	Value.					
		Total.	Per Ton		Total.	Per Ton				
1892........	53,424	$555,000	$10.39	753,268	$7,743,200	$10.28	143,154	$3,416,000	1,791	$43,800
1893........	77,077	729,660	9.47	745,264	7,210,500	9.68	135,193	3,072,320	1,616	39,560
1894........	190,022	1,934,880	10.18	818,597	8,165,620	9.97	107,881	2,508,080	1,285	32,300
1895........	252,428	2,536,020	10.05	829,234	8,041,780	9.65	76,101	1,718,760	525	12,820
1896........	307,779	3,336,580	10.84	959,414	10,316,180	10.75	81,394	2,080,500	1,027	27,720

Year.	Iron, Manufactures of—*Continued.*						Lead, Crude.		Silver—Kg.	
	Sheet and Plate.		Wrought.		Other Manufactures.					
1892........	115,236	$3,693,000	3,273	$180,400	215,554	$5,636,600	10,146	$538,000	30,267	$876,000
1893........	111,986	3,423,180	2,448	140,680	233,778	5,693,880	12,006	615,120	26,717	691,080
1894........	118,596	3,545,520	1,236	70,420	224,292	5,361,540	14,120	704,620	28,961	605,220
1895........	109,209	3,189,728	741	56,390	259,323	6,168,140	15,578	840,760	31,543	686,000
1896........	112,597	3,365,698	851	50,240	298,163	7,326,770	17,222	1,029,980	28,509	637,900

Year.	Steel.									
	Ingots, Cast and Blooms.		Rails.		Tires.		Sheet.		Forge.	
1892........	260,037	$4,655,400	125,648	$2,834,200	9,103	$346,200	40,478	$1,232,200	7,523	$245,800
1893........	273,113	4,585,740	104,496	2,250,480	7,648	303,360	64,782	1,704,520	6,132	209,320
1894........	405,661	6,602,140	113,661	2,326,300	9,769	328,360	166,981	3,829,680	5,627	170,060
1895........	454,619	6,885,200	122,357	2,508,160	7,359	259,790	179,249	3,916,260	4,551	141,830
1896........	598,974	10,102,490	147,183	3,174,780	10,497	367,670	268,009	6,070,020	6,702	204,910

Year.	Steel—*Continued.*						Zinc.			
	Plates.		Wire.		Total.		Crude.		Sheet.	
1892........	16,355	$604,400	9,174	$257,400	208,231	$5,520,200	91,546	$9,613,600	29,102	$3,291,000
1893........	30,614	1,032,900	10,249	273,080	224,922	5,773,660	95,665	7,920,420	32,388	3,030,140
1894........	37,980	1,166,280	8,300	211,420	341,318	8,040,100	97,041	7,233,360	31,724	2,560,260
1895........	42,444	1,349,144	11,987	308,670	367,947	8,483,854	107,664	7,699,340	34,081	2,688,400
1896........	64,653	2,216,640	22,267	591,820	519,311	12,625,840	113,361	9,182,440	36,238	3,244,610

QUARRY PRODUCTION OF BELGIUM. (*a*) **(VALUES IN DOLLARS; 5 f. = $1.)**

Year.	Building Stone—Cubic Meters.						Chalk, Marl. Cubic Meters.		Dolomite. Cubic Meters.		Feldspar. Cubic Meters.		Flagstones. Square Meters	
	Conglomerate.		Freestone.		Limestone.									
1892....	(*b*)	....	139,014	$2,125,600	2,363,678	$1,855,200	32,610	$26,600	3,100	$1,800	(*b*)	......	105,798	$67,400
1893....	(*b*)	....	144,795	2,386,800	2,500,827	1,898,200	46,295	28,400	3,500	1,400	1,800	$3,200	90,780	53,800
1894....	(*b*)	....	135,094	2,049,100	2,586,305	2,089,000	33,700	25,140	(*b*)	......	2,150	3,560	96,109	52,800
1895....	245	$6,680	137,353	2,385,660	2,488,840	2,135,940	100,160	31,200	(*b*)	......	1,900	1,560	95,137	29,640
1896....	160	4,000	152,420	2,742,800	2,646,305	2,143,500	191,100	66,400	21,500	7,200	2,000	3,200	131,400	91,720

Year.	Flint for Earthenware. Cubic Meters		Flint and Gravel for Ballast. Cubic Meters.		Limestone for Flux. Cubic Meters.		Marble. Cubic Meters.		Ochers. Cubic Meters.		Paving Stones. Pieces.		Phosphate of Lime. Cubic Meters.	
1892....	38,370	$48,800	18,100	$10,400	140,800	$55,800	11,750	$455,400	(*b*)	......	88,048,700	$1,497,800	268,210	$756,000
1893....	32,850	40,400	7,280	3,800	166,425	70,200	13,147	506,800	800	$1,400	96,041,650	1,714,000	331,230	881,000
1894....	28,625	34,860	6,640	3,180	77,900	44,980	11,849	383,760	250	1,000	84,309,000	1,441,660	371,776	879,300
1895....	24,870	20,000	202,590	103,200	163,800	87,400	12,790	424,240	500	2,000	92,378,800	1,575,160	506,730	683,140
1896....	23,450	19,160	244,050	123,140	164,900	75,360	16,815	544,680	700	2,800	102,295,950	1,798,720	297,470	537,320

Year.	Plastic Earth. Metric Tons.		Sand. Cubic Meters.		Slate.			Sulphate of Baryta. Metric Tons.		Whetstones and Hones—Pieces.	
					Pieces.	Cubic Meters	Total Value.				
1892....	276,855	$341,800	383,545	$163,600	33,903,500	415	$224,400	42,000	$16,800	153,000	$38,000
1893....	192,202	287,200	389,970	130,800	32,508,500	615	212,800	41,500	58,200	100,000	9,200
1894....	172,010	241,160	374,700	141,640	32,011,000	475	221,540	40,000	56,000	87,000	7,360
1895....	195,485	272,940	381,170	158,120	33,652,000	690	251,720	32,750	45,860	70,000	11,120
1896....	83,020	84,500	418,720	162,960	35,980,000	1,150	269,500	25,000	35,000	45,850	6,820

(*a*) From *Statistiques des Mines, Minières, Carrières, et Usines Métallurgiques*, by Emil Harzé. Belgium also produced, in 1892, grindstones, 17,100 cu. m., $1,400; kaolin, 750 cu. m., $1,600; and in 1896, manganese pig iron, 11,891 tons, $154,160; kaolin, 130,960 cu. m., $213,560. (*b*) Not stated in the report.

MINERAL IMPORTS OF BELGIUM. (*a*) (IN METRIC TONS AND DOLLARS; 5 f. = $1.)

Year.	Ashes.		Cement.		Chemical Products.			Coal.		Coal Briquettes.	
					Soda Salts.		Not Specified.				
1892........	4,582	$18,327	....	....	150,170	$10,988,861	$3,911,958	1,486,212	$4,607,257	5,542	$17,734
1893........	4,285	17,139	....	....	147,254	10,594,780	3,927,768	1,288,640	3,865,920	5,545	17,467
1894........	4,650	18,599	23,786	$142,418	175,704	13,521,762	4,269,520	1,377,099	4,227,418	4,317	13,814
1895........	6,173	24,694	23,198	139,190	184,306	14,630,218	4,390,884	1,530,364	4,713,521	3,452	11,046
1896........	6,747	26,988	30,565	183,392	194,202	11,969,011	5,438,285	1,698,376	5,249,466	1,561	5,151

Year.	Coke.		Copper and Nickel.					Glass and Glassware.		
			Crude.		Hammered, Drawn or Rolled.		Wrought.	Common (Bottles, Broken Glass, etc.)		All Other Kinds.
1892........	191,054	$668,689	7,460	$1,820,189	762	$296,941	$283,747	3,897	$101,984	$325,716
1893........	287,560	983,455	6,422	1,541,285	1,009	308,892	118,586	4,150	106,726	380,834
1894........	326,188	1,154,706	9,600	2,112,060	926	268,497	155,098	4,728	126,810	429,615
1895........	362,834	1,327,972	10,480	2,431,424	926	268,462	168,720	6,078	187,085	441,358
1896........	260,273	976,024	15,506	3,597,466	1,109	321,718	188,981	6,980	213,380	541,225

Year.	Gold (Including Platinum).						Guano.		Iron and Steel Filings.	
	Ore—Kg.		Unwrought—Kg.		Coin.	Jewelry, etc.				
1892........	....	....	4,648	$3,195,035	$2,300,820	$421,577	13,154	$605,092	42.1	$337
1893........	2,037	$13,444	1,090	750,792	1,241,860	562,970	31,790	1,462,329	263.3	2,106
1894........	....	....	1,389	956,743	2,310,740	522,884	27,810	1,223,650	23.9	191
1895........	65	429	2,714	1,869,408	616,280	523,491	43,017	1,806,725	61.6	492
1896........	93	614	4,923	3,390,962	599,540	757,507	25,946	1,037,846	11.1	93

Year.	Iron.									
	Ore.		Pig.		Old.		Hammered, Drawn or Rolled.		Wrought.	
1892........	1,679,443	$3,190,942	150,878	$1,722,444	24,614	$295,366	18,661	$514,986	4,344	$332,761
1893........	1,684,679	3,200,891	161,767	1,882,635	27,537	330,447	20,826	553,078	4,473	327,432
1894........	1,942,883	3,691,478	228,593	2,404,880	24,704	296,443	21,007	566,201	4,542	336,025
1895........	1,857,624	3,529,485	225,037	2,326,123	22,817	273,809	17,616	462,134	4,982	362,557
1896........	2,069,676	3,932,385	324,389	3,897,069	53,802	688,666	22,812	646,150	6,118	469,651

Year.	Lead.			Lime.		Petroleum.			
	Pig.		Manufactures.			Crude.		Refined.	
1892........	31,054	$1,614,783	$24,268	25,884	$56,944	876	$12,257	140,942	$3,946,383
1893........	38,028	1,901,421	37,963	29,460	58,920	6,327	88,574	145,139	4,063,881
1894........	43,491	2,087,566	97,081	19,209	37,458	3,718	52,055	142,429	3,708,151
1895........	45,594	2,370,874	21,097	9,083	17,893	1,824	25,540	159,980	5,759,266
1896........	35,221	1,987,173	17,231	11,522	22,699	95	1,336	158,979	5,405,275

Year.	Pottery.						Resins and Bitumens, Not Specified.		Salt.			
	Terra Cotta. Pieces.		Common.		Earthenware.	Porcelain			Crude.		Refined.	
1892........	27,991	$123,160	2,165	$64,958	$210,808	$122,055	171,737	$9,617,269	86,330	$517,981	34,162	$341,625
1893........	33,339	200,032	2,418	120,896	206,809	131,167	185,466	9,278,289	84,524	507,145	39,561	395,612
1894........	39,113	234,677	2,243	112,169	237,008	145,262	194,015	9,700,769	92,215	553,288	44,414	444,143
1895........	40,531	243,185	2,344	117,216	254,547	155,283	236,133	11,806,672	81,188	487,126	40,625	406,245
1896........	*b*85,486	629,221	2,065	103,231	*c*272,894	*d*177,207	216,278	10,818,881	92,408	554,449	38,785	387,852

Year.	Silver.						Steel.					
	Ore—Kg.		Bullion—Kg.		Coin.	Jewelry, etc.	Ingot.		Bars, Sheets, and Wire.		Wrought.	
1892........	119,508	$19,120	7,146	$242,964	$174,040	$343,636	8,816	$176,319	8,856	$277,835	1,476	$383,702
1893........	1,269,590	152,351	8,482	220,532	8,321,760	311,596	18,859	339,459	9,210	269,080	1,750	437,513
1894........	1,300,333	156,040	17,471	454,246	40,920	323,802	18,518	296,287	12,040	352,063	1,028	257,119
1895........	1,297,070	155,648	7,936	206,336	2,798,680	343,840	18,405	294,478	17,582	538,880	1,136	283,031
1896........	1,476,583	177,190	8,980	233,480	6,461,840	415,967	28,435	561,744	15,263	479,841	936	233,924

Year.	Stone.									Sulphur.	
	Roofing Slate. 1,000 Pieces.		Building Stone, Including Marble and Alabaster.		Cut, Polished, etc.	Paving.		All Other Kinds.			
1892........	37,536	$150,145	25,788	$515,770	$96,452	3,862	$11,585	46,840	$515,244	24,978	$899,033
1893........	37,326	149,305	29,230	584,591	112,814	7,660	22,980	12,759	140,345	17,838	642,156
1894........	39,504	158,018	29,546	590,916	59,684	2,281	6,843	75,502	830,525	24,982	899,337
1895........	37,720	150,879	31,156	623,114	53,450	4,249	14,023	83,569	919,263	18,438	590,029
1896........	38,209	152,834	40,511	891,237	61,769	6,163	22,187	81,360	894,964	14,399	403,177

Year.	Tin.			Tin Plate.			Zinc.			Ores, Crude, Not Elsewhere Specified.
	Ingot.		Manufactures.	Unwrought.		Wrought.	Ingot.		Manufactures.	
1892........	3,302	$1,552,072	$1,531	1,798	$143,879	$21,357	5,936	$617,318	$9,170	$9,979,868
1893........	3,100	1,456,839	1,426	2,411	188,251	18,897	5,833	501,632	9,237	8,480,860
1894........	4,724	2,220,258	4,245	1,919	145,819	18,781	9,130	675,633	10,554	9,801,923
1895........	3,216	1,286,230	3,501	2,046	151,511	23,712	8,551	615,643	13,095	8,361,581
1896........	4,617	1,662,044	2,845	3,203	243,403	27,425	20,182	1,614,588	11,230	10,227,349

(*a*) From *Statistique de la Belgique; Tableau Général du Commerce avec les Pays Etrangers*, Brussels. (*b*) In metric tons. (*c*) Corresponding to 3,668 metric tons. (*d*) Corresponding to 824 metric tons.

MINERAL EXPORTS OF BELGIUM. (*a*) (IN METRIC TONS AND DOLLARS; 5 f. — $1.)

Year.	Ashes.		Cement.		Chemical Products.			Coal.		Coal Briquettes.	
					Soda Salts.		Not Specified.				
1892........	487	$1,947	....	....	34,354	$2,210,402	$5,809,465	4,539,485	$14,072,403	351,570	$1,125,024
1893........	255	1,020	....	....	38,668	2,767,447	5,915,821	4,849,887	14,549,661	489,225	1,541,059
1894........	776	3,105	195,533	$1,173,197	44,678	3,470,711	6,235,984	4,539,525	13,986,342	573,463	1,835,082
1895........	1,030	4,121	273,807	1,642,845	55,089	3,965,041	5,555,916	4,661,477	14,357,349	459,702	1,471,046
1896........	1,084	4,338	277,615	1,665,690	42,857	2,298,603	6,819,396	4,649,799	14,414,377	459,974	1,517,914

Year.	Coke.		Copper and Nickel.								Glass and Glassware.		
			Crude.		Hammered, Drawn or Rolled.		Wrought.	Foreign Coin. Kg.			Common (Bottles, Broken Glass, etc.).		Plate.
1892........	991,028	$3,468,598	3,905	$952,723	755	$233,948	$125,184	3,106	$3,106		17,613	$491,608	$2,444,869
1893........	941,663	3,220,487	3,473	833,449	2,007	614,140	109,640	2,326	2,326		3,824	55,565	2,361,418
1894........	879,278	3,112,644	4,936	1,085,995	1,856	538,237	164,448	494,422	494,422		3,020	33,066	2,582,004
1895........	870,983	3,187,798	5,205	1,207,508	2,558	741,944	129,892	676	676		4,181	42,923	2,768,243
1896........	863,067	3,236,501	11,700	2,714,477	2,073	601,277	168,521	94	94		3,647	26,574	3,468,668

Year.	Glass—*Continued.*		Gold (Including Platinum).				Guano.		Iron and Steel Filings.	
	All Other Kinds.		Unwrought—Kg.		Coin.	Jewelry, etc.				
1892........	141,334	$5,951,248	68	$46,748	$32,860	$10,833	20,162	$927,446	3,154	$25,236
1893........	158,496	7,485,843	714	491,803	591,480	32,479	22,359	1,028,502	1,847	14,774
1894........	160,319	7,468,692	375	258,300	29,760	45,569	17,820	784,068	2,217	17,738
1895........	156,304	7,400,444	893	615,098	3,547,640	77,426	18,968	796,644	1,488	11,904
1896........	178,611	12,194,484	3,713	2,557,514	2,666,620	75,570	14,633	585,308	7,025	59,007

Year.	Iron.									
	Ore.		Pig.		Old.		Hammered, Drawn or Rolled.		Wrought.	
1892........	225,650	$428,735	41,320	$1,071,348	9,494	$113,929	276,482	$7,097,547	61,518	$3,654,303
1893........	171,120	672,127	33,330	918,445	9,436	113,229	271,743	6,758,620	45,792	2,467,668
1894........	258,529	491,205	34,336	906,266	8,491	101,894	279,891	7,043,968	33,375	2,349,299
1895........	325,809	619,086	33,237	912,801	12,519	150,228	271,066	6,697,454	39,985	2,963,007
1896........	339,235	739,546	33,465	1,132,480	18,416	235,725	343,072	9,072,611	44,962	3,497,257

Year.	Lead.			Lime.		Petroleum.			
	Pig.		Wrought.			Crude.		Refined.	
1892........	24,709	$1,284,845	$13,754	385,399	$847,879	598.0	$8,377	31,893	$893,018
1893........	29,947	1,497,358	11,086	404,039	812,247	1,345.0	18,835	25,761	721,316
1894........	34,690	1,665,122	16,087	411,808	808,017	1,408.0	19,689	26,500	689,006
1895........	39,996	2,079,800	18,192	436,685	860,172	2,812.0	32,364	29,239	1,052,591
1896........	31,366	1,725,144	36,821	477,218	940,110	1.6	23	29,321	996,913

Year.	Pottery.								Resins and Bitumens, not Specified.	
	Terra Cotta. Pieces.		Common.		Earthenware.		Porcelain.			
1892........	125,478	$552,102	2,962	$88,857	4,326	$865,252	428.5	$377,085	48,636	$2,723,591
1893........	125,358	752,150	3,731	186,527	4,636	927,144	338.9	298,226	58,447	2,922,338
1894........	101,149	606,891	3,833	191,664	5,724	1,144,827	565.5	497,647	62,197	3,251,887
1895........	127,413	764,481	3,463	173,140	4,048	809,509	400.7	352,589	76,087	3,804,331
1896........	*b* 302,526	1,913,054	2,628	131,394	4,692	513,950	586.7	54,832	86,906	4,345,315

Year.	Salt.				Silver.						
	Crude.		Refined.		Ore—Kg.		Bullion—Kg.		Coin.		Jewelry, etc.
1892........	1,118	$6,709	228	$2,283	58,163	$9,306	76,736	$2,609,024	42,482	$1,699,280	$18,746
1893........	556	3,339	149	1,484	....	....	45,486	1,182,636	37,623	1,504,920	48,658
1894........	871	5,224	158	1,579	47,260	5,671	70,145	1,823,770	32,244	1,289,760	35,597
1895........	2,136	12,814	117	1,172	19,400	2,328	45,299	1,177,774	48,326	1,933,040	51,452
1896........	1,434	8,604	129	1,287	19,400	2,328	40,118	1,043,068	16,696	667,840	137,137

Year.	Steel.						Stone.				
	Ingot.		Bars, Sheets, and Wire.		Wrought.		Roofing Slate. 1,000 Pieces.		Building Stone, Including Marble and Alabaster.		Cut, Polished, etc.
1892........	914	$18,281	86,576	$2,212,972	11,376	$2,957,886	14,726	$114,866	264,329	$1,797,437	$760,237
1893........	1,332	23,983	91,290	2,132,521	21,908	5,476,943	13,882	108,280	237,378	1,614,168	727,617
1894........	659	10,541	120,768	2,604,402	34,839	8,709,782	11,395	88,880	130,754	889,130	687,325
1895........	1,315	21,038	170,328	4,052,108	27,438	5,508,067	15,237	106,657	147,679	1,004,216	645,690
1896........	1,145	23,272	179,873	4,597,877	38,306	7,843,777	15,435	111,130	161,298	1,290,387	922,147

Year.	Stone—*Continued.*				Sulphur.		Tin.		
	Paving.		All Other Kinds.				Ingot.		Manufactures.
1892........	146,879	$878,275	517,069	$2,068,277	3,868	$139,255	954	$448,416	$128
1893........	153,112	918,672	721,783	2,887,133	4,609	165,916	247	116,051	574
1894........	152,720	916,323	736,611	2,946,445	3,550	127,811	1,194	561,288	2,566
1895........	134,838	869,930	730,863	2,923,451	4,576	146,423	1,051	420,453	1,176
1896........	154,737	1,145,032	796,231	3,184,926	5,335	149,371	1,055	379,738	373

Year.	Tin Plate.			Zinc.			Ores Not Specified.
	Unwrought.		Wrought.	Ingot.		Manufactures.	
1892........	236.5	$18,917	$5,497	76,823	$7,989,600	$48,533	$5,446,617
1893........	662.1	50,317	213,295	75,828	6,521,191	93,573	6,125,735
1894........	473.4	35,975	210,987	81,248	6,012,364	54,486	3,717,273
1895........	1,750.2	133,016	21,693	88,316	6,358,748	54,210	4,161,023
1896........	3,952.3	309,625	11,750	100,369	8,029,501	56,349	4,236,703

(*a*) From *Statistique de la Belgique; Tableau Général du Commerce avec les Pays Etrangers.* (*b*) Metric tons.

CANADA.

The mineral statistics of the Dominion of Canada as collected by the Geological Survey and the Bureau of Mines of the various provinces, are summarized in the following tables:

MINERAL PRODUCTION OF THE DOMINION OF CANADA. (*a*) (IN METRIC TONS.)

Year.	Arsenic.		Asbestos.		Barytes.		Bricks. Thousands. (*b*)		Building Material.			
									Stone—Cu. Yds. (*b*)		Flagstones. Sq. Ft.	
1892....	*Nil.*	....	5,518	$390,462	286	$1,260	202,147	$1,251,934	219,747	$609,827	13,700	$1,869
1893....	*Nil.*	....	5,743	310,156	*Nil.*	....	290,000	c1,800,000	(*q*)	c1,100,000	40,500	3,487
1894....	6.4	$420	6,922	420,825	980	2,830	(*q*)	1,800,000	(*q*)	1,200,000	152,700	5,298
1895....	*Nil.*	....	7,943	368,175	(*q*)	....	c308,836	1,670,000	(*q*)	1,095,000	80,005	6,687
1896....	*Nil.*	....	11,113	429,856	131	715	(*q*)	1,600,000	(*q*)	c1,000,000	(*q*)	6,710
1897....	*Nil.*	....	22,918	324,700	518	3,060	(*q*)	....	(*q*)	....	(*q*)	7,190

Year.	Building Material—*Continued.*				Cement. Barrels.		Fireclay.		Pottery	Tiles and Sewer Pipes. (*d*)	Coal.		Coke. (*e*)	
	Granite.		Marble.											
1892....	22,047	$89,326	308	$3,600	117,408	$147,663	1,806	$4,467	$265,811	$558,517	2,982,622	$6,363,757	50,925	$160,349
1893....	20,431	94,393	535	5,100	158,597	194,015	490	700	218,186	550,000	3,432,368	7,359,080	55,409	161,790
1894....	14,877	109,936	*Nil.*	......	108,142	144,637	489	2,167	162,144	450,325	3,490,039	7,429,468	52,657	148,551
1895....	17,453	84,838	181	2,000	128,294	173,675	1,206	3,492	151,588	467,045	3,155,533	6,739,153	48,404	143,047
1896....	16,980	106,709	203	2,405	149,090	201,651	764	1,805	163,427	378,875	3,398,091	7,226,462	45,014	110,257
1897....	(*q*)	75,000	(*q*)	......	205,213	275,273	1,744	5,759	125,000	164,250	3,516,466	7,286,257	71,497	209,920

Year.	Copper, Fine. (*f*)		Feldspar. (*g*)		Gold—Kg. (*h*)		Graphite.		Grindstones.		Gypsum.	
1892....	3,215	$818,580	159	$525	1,366	$907,601	151	$3,763	4,792	$51,187	218,677	$241,127
1893....	3,679	871,809	612	5,025	1,469	976,603	*Nil.*	....	4,173	38,379	174,697	196,150
1894....	3,509	739,659	*Nil.*	....	1,698	1,128,688	63	223	3,408	32,717	202,877	202,031
1895....	3,987	945,714	......	*i*2,545	2,877	1,911,676	199	6,150	3,153	31,982	205,187	202,608
1896....	4,260	1,021,960	890	*i*2,633	4,183	2,780,086	126	9,455	3,368	33,310	187,818	178,061
1897....	6,033	1,501,660	1,157	3,506	(*q*)	6,190,000	(*q*)	....	......	40,000	217,392	244,531

Year.	Iron Ore.		Chrome Iron Ore.		Pyrites.		Iron, Pig. (*j*)		Lead (in Ore). (*k*)	
1892....	93,666	$263,866	*Nil.*	....	54,223	$179,310	38,504	$637,421	367	$33,064
1893....	113,945	299,368	*Nil.*	....	53,109	175,626	50,754	790,283	968	79,696
1894....	99,783	226,611	907	$20,000	36,766	121,581	45,327	646,447	2,587	187,936
1895....	93,257	238,070	2,882	41,301	31,024	102,594	47,586	696,440	7,467	531,716
1896....	83,377	191,557	2,124	27,004	30,586	101,155	(*q*)	(*q*)	10,977	721,159
1897....	64,820	178,716	2,392	32,474	35,299	116,730	(*q*)	(*q*)	17,698	1,396,853

Year.	Lime—Bushels. (*b*)		Limestone for Flux.		Manganese Ore.		Mica.	Nickel—Kg.		Ochers.	
1892....	2,260,640	$411,270	20,836	$21,492	104	$10,250	*l*$104,745	1,094,855	$1,399,956	354	$5,800
1893....	6,750,000	*c*900,000	25,217	27,519	193	14,578	*l*75,719	1,806,669	2,071,151	971	17,710
1894....	(*q*)	900,000	31,843	34,347	67	4,180	*l*45,581	2,225,995	1,870,958	554	8,690
1895....	5,225,000	*c*700,000	31,370	32,916	113	8,464	65,000	1,763,823	1,360,984	1,215	14,600
1896....	(*q*)	650,000	33,965	36,140	112	13,975	60,000	1,540,920	1,188,990	2,043	16,045
1897....	(*q*)	....	(*q*)	40,000	(*q*)	....	75,000	1,818,321	1,399,176	3,542	23,560

Year.	Petroleum, Crude. Barrels. (*m*)		Phosphate.		Platinum.	Precious Stones.	Roofing Cement.		Sand and Gravel (Exports).		Molding Sand.	
1892....	779,753	$984,438	10,825	$157,424	$3,500	$1,000	726	$12,000	270,233	$85,829	313	$1,380
1893....	798,406	874,255	7,437	70,942	1,800	1,500	863	5,441	298,572	121,795	3,964	9,086
1894 ...	829,104	835,322	6,224	41,166	950	1,500	739	3,978	294,526	86,940	5,687	12,428
1895....	726,138	1,086,738	1,653	9,565	3,800	(*q*)	(*q*)	3,153	251,440	118,359	6,137	13,580
1896....	726,822	1,155,647	517	3,420	750	(*q*)	78	430	203,909	80,110	5,207	11,478
1897....	709,857	1,011,546	824	3,984	6,600	(*q*)	(*q*)	....	(*q*)	....	4,976	10,931

Year.	Salt.		Silver—Kg. (*n*)		Slate.		Soapstone.		Terra Cotta. (*o*)	Various Products. (*p*)	Whiting. Barrels.	
1892....	41,233	$162,041	9,662	$272,130	4,699	$69,070	1,246	$6,240	$97,239	$475,348	(*q*)	....
1893....	56,525	195,926	13,130	330,128	6,452	90,825	650	1,920	55,704	724,580	(*q*)	....
1894....	51,890	170,687	26,366	534,049	(*q*)	75,550	881	1,640	65,600	708,794	500	$750
1895....	47,515	160,455	55,229	1,159,166	(*q*)	58,900	431	2,138	195,123	801.060	(*q*)	....
1896....	39,880	169,693	99,696	2,149,503	(*q*)	53,370	372	1,230	83,855	647,997	(*q*)	....
1897....	(*q*)	190,000	172,886	3,322,905	(*q*)	42,800	(*q*)	....	155,595	836,197	(*q*)	....

(*a*) From *Reports Compiled by the Geological Survey of Canada.* (*b*) Returns incomplete. (*c*) Estimated. (*d*) Contains in 1892, 15,689 M. tiles, value $190,857; sewer pipe, value $367,660; in 1893. 100,000 M. tiles, estimated value $200,000; sewer pipe, $350,000; in 1894, tiles, $200,000; sewer pipe, $250,825; in 1895, 19,200 M. tiles (estimated), value $210.000; sewer pipe, $257,045; in 1896, tiles, $225,000; sewer pipe, $153,875. (*e*) Oven coke, nearly all the production of Nova Scotia. (*f*) Copper contents of ore, matte, etc.; values per lb.: 1892, 11⅛c.; 1893, 10¾c.; 1894, 9⅜c.; 1895, 10⅛c.; 1896, 10$\frac{3}{10}$c. (*g*) In 1893, includes quartz, 91 metric tons, $500; in 1896, 9 tons, $50. (*h*) Fine ounces calculated at $20.67 per oz., or $664.56 per kgm. (*i*) Export returns. (*j*) Native iron ore converted into pig iron in 1892, 87,950 metric tons, value $250,966; in 1893, 112.539 metric tons, value $296,979; in 1894, 98,766 metric tons, value $223,861; in 1895, 84,558 metric tons, value $218,836. (*k*) Lead contents of ores in 1892 at 4.1c. per lb., in 1893 at 3.7c. per lb., in 1894 at 3.3c. per lb., in 1895 at 3¼c. per lb., and in 1896 at 3c. per lb. (*l*) Exports, plus quantity sold to Canadian electrical and stove manufacturers. (*m*) Calculated from the inspection returns at 100 gals. crude to 38 gals. refined oil. The value of the crude was in 1892, $1.13⅛ per bbl. of 35 imperial gals.; in 1893, $1.09½; in 1894, $1.00¾; in 1895, $1.49⅝; in 1896, $1.59 per bbl. 1 barrel refined = 42 imperial gals. (*n*) Silver contents of ore, values for production and exports: 1892, $0.87⅜; 1893, $0.78½; 1894, $0.63; 1895, 0.65\frac{3}{10}$; 1896, $0.67 per oz. (*o*) In 1893, includes porous fireproof terra cotta; in 1894, includes porous fireproof terra cotta and other structural and ornamental forms. (*p*) Includes in 1892, natural gas, value $150,000, and mineral waters, 640,380 gals., value $75,348; in 1893, natural gas, value $366,233, and mineral waters, 725,096 gals., value $108,847; in 1894, natural gas, value $313,754; mineral waters, 767,460 gals., value $110,040, and lithographic stone, 163 metric tons, value $30,000; in 1895, natural gas, value $423,032; mineral waters, 739,362 gals., value $126,048, and lithographic stone, value $2,000; in 1896, natural gas, value $276,301; mineral waters, 706,372 gals.. value $111,736, and tripoli, 602 metric tons, value $9,960; in 1897, mercury, 312 kg., value $324; natural gas, $325,873, and sundry minerals partly estimated, including actinolite, graphite, manganese, soapstone, and tripolite; and $250,000 each year as the estimated value of products not reported. (*q*) Not reported.

MINERAL IMPORTS OF THE DOMINION OF CANADA. (*a*) (IN METRIC TONS AND DOLLARS.)

Year. (*h*)	Aluminum.		Asphalt.		Brass. (*f*)	Bricks and Tiles.	Brimstone.		Buhrstones. Number.		Cement.	Chalk.
1892..	(*i*)	$1,159	11,099	$152,136	$537,105	$189,063	2,159	$67,095	584	$1,434	$287,729	$9,558
1893..	15	1,700	3,100	86,308	514,171	192,032	2,770	77,216	2,664	3,552	327,148	8,856
1894..	(*i*)	1,686	8,215	111.441	453,671	186,727	2,647	61,558	2.042	3,029	284,471	11.308
1895..	33	3,248	2,769	41,817	427,454	123,461	2,222	56,965	1,612	2,172	251.926	10,267
1896..	7	7,587	3,843	33,875	477,279	198,594	3,145	63,978	1,572	2,049	255,029	9.075

Year. (*h*)	Chloride of Lime.		Cryolite.		Clays.	Coal, Anthracite. (*b*)		Coal and Coke.		Coal Tar. Barrels.		Coin and Bullion.
1892..	1,409	$58,205	(*i*)	......	$82,619	1,341,836	$5,640,346	1.579,253	$4,833,490	14,731	$34,471	$1,818,590
1893..	1,883	81,059	33	$612	70,565	1,361,228	6,355,285	1,591,726	4,168,515	11,568	21,392	6,534,307
1894..	1,236	54,182	16	94	70,731	1,389,387	6,354,040	1,405,656	3,515,845	9,609	17,239	4,023,072
1895..	1,649	63,486	3	386	62,730	1,274,019	5,350,627	1,515,309	3,523,042	19,200	36,581	4,576,620
1896..	1,565	58,994	21	2,699	63,984	1,428,255	5,667,096	1,642,462	3,556,593	18,467	31,209	5,226,319

Year. (*h*)	Copper. (*f*)	Earthenware and China.	Emery (Wheels and Ground).	Flint and Stones.		Fuller's Earth.		Glass.	Gold and Silver. (*f*)	Gravel and Sand.		Gunpowder.
1892..	$431,427	$748,810	$24,274	593	$2,590	97	$2,453	$1,257,858	$261,471	23,105	$27,890	$136,171
1893..	475,714	709,737	23,368	135	2,707	98	3,118	1,219,543	298,439	23,646	31,739	143,028
1894..	281,801	695,514	19,553	254	3,263	58	1,566	1,209,208	283,645	37,723	33,506	112,781
1895..	258,214	547,935	22,344	235	2,705	108	1,904	1,120,986	341,476	17,789	24,779	142,305
1896..	294,410	575,493	18,840	287	3,027	(*i*)	1,834	1,104,481	340,241	17,198	24,604	136,318

Year. (*h*)	Gypsum.		Iron Sand.		Iron and Steel. (*f*)	Lead. (*f*)	Lime—Barrels.		Litharge.		Lithographic Stones.	Metal Manufactures.
1892..	558	$1,182	9	$908	$12,625,422	$317,142	6,133	$6,241	470	$34,348	$5,047	$373,819
1893..	449	1,165	22	1,790	13,199,528	288,636	6,879	4,917	348	24,401	4,449	353,225
1894..	(*i*)	1,660	11	868	11,310,771	208,644	6,766	4,907	1,753	28,685	4,665	317,115
1895..	947	960	10	1,300	9,249,749	192,046	12,008	5,748	542	32,953	10,078	301,921
1896..	547	848	15	3,008	10,952,607	239,109	10,289	7,331	481	32,817	4,964	307,991

Year. (*h*)	Mineral Oils. Gallons.		Ochers.		Ores (Including Cobalt).		Paints and Colors.	Phosphorus.		Plaster.		Potash.		Precious Stones and Jewelry.
1892..	5,793,636	$494,004	775	$22,906	1,778	$7,898	$194,290	9	$6,415	*g*670	$3,144	349	$39,781	$344,827
1893..	6,222,297	463,709	898	23,184	912	3,422	218,888	9	7,826	*g*314	3,585	424	53,956	354,278
1894..	6,666,323	446,492	616	18,955	16	165	182,270	10	9,367	*g*202	2,584	448	45,345	427,796
1895..	6,852,425	442,402	73	2,077	10	261	161,726	8	8,085	*g*958	1,707	344	34,595	301,150
1896..	7,130,061	628,871	158	2,995	......	24,088	204,568	10	9,525	*g*1,205	2,190	292	41,037	675,420

Year. (*h*)	Pumice Stone.	Quicksilver.		Kainite.		Sal Ammonia		Salt.		Saltpeter.		Silex.		Slate.
1892..	$3,282	14	$15,306	37	$1,041	61	$6,580	100,006	$380,958	44	$4,270	65	$1,244	$50,441
1893..	3,798	23	22,996	(*i*)	....	95	6,828	96,505	361,300	110	10,615	110	1,301	51,179
1894..	4,160	17	14,463	87	1,642	130	10,126	96,406	381,636	87	8,881	111	1,521	29,267
1895..	3,609	29	25,703	294	4,459	83	7,083	95,342	362,592	350	32,282	130	1,881	19,471
1896..	3,721	35	32,343	180	1,978	52	7,876	96,467	363,438	596	55,628	149	2,174	24,176

Year. (*h*)	Soda.		Spelter.		Stone and Marble. (*f*)	Sulphate of Copper.		Tin. (*f*)	Ultramarine.		White and Red Lead.		Whiting.	Zinc.
1892..	12,862	$438,063	630	$62,550	$276,005	451	$33,283	$1,594,205	118	$14,723	4,667	$350,686	$96,867	$127,302
1893..	13,725	451,621	486	49,822	231,497	581	40,747	1,274,866	122	16,264	4,928	364,680	25,563	124,360
1894..	11,689	339,703	372	35,615	223,930	408	29,035	1,310,889	119	15,978	4,925	353,053	26,649	96,882
1895..	14,775	347,806	419	30,245	200,786	377	62,777	972,078	112	15,252	3,984	282,353	24,441	68,954
1896..	12,396	376,910	494	40,548	219,298	710	57,380	1,236,640	108	14,079	5,312	367,569	27,322	87,074

MINERAL EXPORTS OF DOMESTIC PRODUCE FROM THE DOMINION OF CANADA. (*a*) (IN METRIC TONS AND DOLLARS.)

Year. (*h*)	Agric. Implements.	Antimony.		Asbestos.		Barytes	Brick. Thousands		Cement	Charcoal.	Cinders.	Clay, M'f's of.	Coal.		Coin and Bullion	Coke.	
1892..	$402,778	4	$60	6,637	$514,412	......	504	$2,750	$1,495	$46,817	$5,451	$120	857,411	$3,195,467	$306,447	(*i*)	....
1893..	462,253	(*i*)	....	5,351	396,718	......	3,625	24,560	894	48,700	4,118	118	823,926	3,114,558	309,459	(*i*)	....
1894..	465,682	(*i*)	....	5,651	339,756	......	4,502	33,018	1,268	33,191	3,941	67	903,563	3,321,565	310,006	2	$10
1895..	663,718	(*i*)	....	7,796	493,075	$900	1,417	6,774	443	21,823	3,163	671	1,007,506	3,578,195	256,571	24	108
1896..	593,464	(*i*)	....	8,696	482,679	168	1,216	7,768	1,035	36,086	2,125	496	1,929,918	3,249,069	207,532	17	[illegible]

Year. (*h*)	Copper Ore.		Copper Matte, Regulus, etc.		Copper, Fine.		Explosives.		Fertilizers.	Glass and Glassware.	Grindstones	Gypsum, Crude.		Gypsum, Ground.	Iron and Steel, M'f's of	Lime.
1892..	306	$30,755	(*i*)	....	1,723	$185,848	75	$61,763	$8,763	$1,964	$23,465	161,941	$194,804	$1,372	$243,857	$124,153
1893..	64	3,850	326	$391,969	(*c*)	....	58	56,764	7,706	4,648	25,702	160,082	178,979	29,457	316,454	106,105
1894..	(*c*)	....	(*c*)	....	(*c*)	....	35	29,050	31,418	4,433	19,330	147,337	160,082	14,616	295,924	71,171
1895..	(*c*)	....	(*c*)	....	(*c*)	....	173	98,083	32,174	4,788	12,042	145,875	156,897	24,556	308,711	83,586
1896..	(*c*)	....	(*c*)	....	(*c*)	....	120	92,763	36,187	6,881	18,853	182,217	205,641	23,332	506,946	76,451

Year. (*h*)	Metals Not Iron and Steel, M'f'es of	Mica, Crude and Cut.		Mica, Ground.	Mineral Oils. Gallons.		Nickel, in Ore.		Ores.						
									Gold Quartz, etc.	Iron.		Lead.		Manganese.	
1892..	$17,495	618	$63,708	$4,758	440,906	$18,217	6,911	$617,639	$316,177	6,977	$36,935	27	$5,900	150	$6,106
1893..	24,113	292	92,529	4,871	178,101	6,814	4,048	427,557	247,868	7,086	26,114	68	2,329	132	13,596
1894..	24,169	155	26,553	(*i*)	68,740	2,722	3,315	808,790	318,258	1,686	9,026	1,503	65,337	53	4.353
1895..	18,932	335	46,894	575	63,543	3,572	3,647	599,568	612.729	4,290	43,088	8,191	333,763	116	7,698
1896..	31,308	251	55,514	113	18,241	2,971	3,173	486,651	1,099,053	2,666	39,999	9,209	408,625	79	1,988

Year. (*h*)	Ores. *Continued*.		Phosphates.		Plumbago.		Pyrites.		Salt.		Sand and Gravel.		Slate.		Stone.	Tin, M'f'es	Various Minerals.
	Silver.																
1892..	295	$193,441	15,643	$380,462	58	$438	(*i*)	....	83	$763	208,446	$60,285	57	$1,507	$50,589	$5,115	$29,400
1893..	375	65,406	10,786	132,475	227	*e*3,586	15,156	$39,582	102	955	308,031	117,760	131	2,654	44,738	6,160	15,487
1894..	*d*20	423,707	4,488	40,400	(*i*)	38	12,867	46,788	127	1,280	274,664	96,153	67	1,890	46,883	6,157	9,580
1895..	*d*35	651,787	3,800	33,810	4	291	7,604	35,452	137	1,136	273.924	90,098	201	3,964	60,405	9,531	26,488
1896..	*d*78	1,595,548	479	5,280	94	10,771	6,706	32,898	76	767	259,585	119,847	275	8,988	49,679	5,777	12,568

(*a*) From the tables of the *Trade and Navigation of the Dominion of Canada*. The imports figures are for home consumption only. The exports are those of domestic produce. (*b*) Including anthracite coal dust. (*c*) In 1893, included under copper matte, regulus, etc.; in 1894, copper contents of ores, matte and regulus, and fine copper exported were 541 tons, value $88,352; in 1895, 1722 tons, value $222,657; in 1896, 1788 tons, value $194,771. (*d*) Silver contents of ores. (*e*) Also exported in 1893, plumbago, manufactures, value $198. (*f*) And manufactures thereof. (*g*) Represents barrels. (*h*) Fiscal years ending June 30. (*i*) Not reported.

MINERAL PRODUCTION OF BRITISH COLUMBIA. (*a*) (IN METRIC TONS.)

Year.	Coal. (*b*)		Coke.		Copper.		Gold—Kg.				Lead. (*c*)		Silver—Kg.	
							Lode.		Placer.					
1893..	998,947	$2,984,882	......	......	......	....	36	$23,404	....	$356,131	968	$78,996	7,060	$195,000
1894..	1,029,160	3,088,859	......	......	147	$16,234	194	125,014	....	405,516	2,568	169,875	23,214	470,219
1895..	954,688	2,818,962	459	$2,260	432	47,642	1,221	785,271	749	481,683	7,478	532,255	46,546	977,229
1896..	859,775	2,327,145	625	3,075	1,732	190,926	1,936	1,244,180	846	544,026	10,977	721,384	97,519	2,100,689
1897..	896,980	2,648,562	18,117	89,155	2,415	266,258	3,301	2,122,820	798	518,520	17,618	1,390,517	170,227	3,272,836

(*a*) From the *Annual Report of the Minister of Mines*. (*b*) The figures of production of coal from 1867 to 1892 are to be found in THE MINERAL INDUSTRY, Vol. II., p. 220. (*c*) Attention should be called to the discrepancy between certain of these figures and those of the Canadian Geological Survey; practically the total production of lead in the Dominion is from British Columbian ore.

MINERAL PRODUCTION OF NOVA SCOTIA. (*a*) (*b*) (IN METRIC TONS.)

Year.	Ankerite.	Antimony Ore.		Barytes.		Building Stone.		Coal. (*d*)	Coke.	Copper.		Gold. Kg. (*f*)	Grindstones.	
1872....	(*b*)	(*b*)	....	236	$2,080	......	(*b*)	....	(*b*)	(*b*)	......	(*b*)	(*b*)	....
1873....	(*b*)	(*b*)	....	(*b*)	(*b*)	2,558	$34,532	....	(*b*)	(*b*)	......	(*b*)	(*b*)	....
1874....	(*b*)	(*b*)	....	189	2,680	*c*7,646	40,318	....	(*b*)	(*b*)	......	(*b*)	(*b*)	....
1875....	(*b*)	(*b*)	....	158	1,750	5,242	39,639	....	(*b*)	(*b*)	......	(*b*)	(*b*)	....
1876....	(*b*)	(*b*)	....	(*b*)	......	5,357	(*b*)	....	(*b*)	39	(*b*)	(*b*)	(*b*)	....
1877....	(*b*)	(*b*)	....	20	(*b*)	8,476	(*b*)	....	(*b*)	258	(*b*)	(*b*)	(*b*)	....
1878....	2,814	(*b*)	....	(*b*)	......	2,880	11,390	....	(*b*)	(*b*)	......	(*b*)	(*b*)	....
1879....	(*b*)	(*b*)	....	435	2,400	5,045	21,638	....	9,800	(*b*)	......	(*b*)	1,519	$20,090
1880....	(*b*)	(*b*)	....	(*b*)	......	3,211	16,020	....	18,385	(*b*)	......	(*b*)	1,360	18,200
1881....	(*b*)	(*b*)	....	36	(*b*)	3,952	29,881	....	28,316	(*b*)	......	(*b*)	1,524	20,160
1882....	4,158	(*b*)	....	(*b*)	......	164	18,534	....	27,158	(*b*)	......	(*b*)	2,222	28,850
1883....	6,959	(*b*)	....	(*b*)	......	707	1,332	....	44,896	*e*54	(*b*)	(*b*)	140	1,085
1884....	5,260	553	....	(*b*)	......	3,473	1,650	....	40,726	*e*99	(*b*)	(*b*)	1,996	26,400
1885....	2,116	687	$33,095	272	(*b*)	7,260	17,949	....	30,667	(*b*)	......	(*b*)	2,004	28,962
1886....	859	585	26,370	208	(*b*)	8,410	(*b*)	....	32,109	(*b*)	......	(*b*)	1,451	22,400
1887....	72	364	(*b*)	3,630	(*b*)	4,446	24,397	....	29,207	(*b*)	......	(*b*)	(*b*)	32,669
1888....	18	279	(*b*)	997	(*b*)	3,563	(*b*)	....	30,284	(*b*)	......	(*b*)	(*b*)	17,225
1889....	(*b*)	48	695	(*b*)	......	*c*4,446	35,916	....	36,134	454	(*b*)	(*b*)	(*b*)	18,000
1890....	(*b*)	23	625	(*b*)	......	3,506	16,740	....	37,325	907	(*b*)	(*b*)	(*b*)	8,385
1891....	(*b*)	9	(*b*)	(*b*)	......	(*b*)	....	....	34,694	816	(*b*)	(*b*)	(*b*)	19,800
1892....	(*b*)	(*b*)	(*b*)	(*b*)	......	(*b*)	15,841	1,973,864	55,880	23	$100	622	119	11,793
1893....	(*b*)	(*b*)	....	(*b*)	......	(*b*)	....	1,709,636	52,437	1,134	(*b*)	436	(*b*)	6,971
1884....	(*b*)	(*b*)	....	(*b*)	......	(*b*)	....	2,235,438	60,592	(*b*)	......	621	(*b*)	6,581
1895....	(*b*)	(*b*)	....	(*b*)	......	(*b*)	....	2,122,672	42,160	(*b*)	......	625	(*b*)	17,189
1896....	(*b*)	(*b*)	....	(*b*)	......	(*b*)	....	2,259,168	59,680	9	(*b*)	796	(*b*)	30,317

Year.	Gypsum.		Iron Ore.		Limestone.		Manganese Ore.		Molding Sand		Scythestones.	
1872....	90,239	$89,523	5,442	(b)	(b)	....	36	$1,400	(b)	....	(b)	....
1873....	109,491	120,693	3,162	$10,455	(b)	....	118	(b)	118	260	(b)	....
1874....	94,475	104,140	2,230	7,407	406	$537	(b)	(b)	272	600	(b)	....
1875....	86,328	95,907	4,052	13,401	4,390	3,372	6	(b)	91	200	(b)	....
1876....	73,415	(b)	13,856	(b)	922	(b)	15	(b)	206	(b)	(b)	....
1877....	97,529	(b)	16,876	(b)	6,100	(b)	88	(b)	145	(b)	(b)	....
1878....	76,205	71,635	33,208	(b)	....	(b)	115	6,505	503	555	(b)	....
1879....	g86,297	74,923	27,115	(b)	8,566	(b)	131	7,170	(b)	....	907	$1,000
1880....	116,509	84,181	46,442	(b)	10,671	(b)	202	7,981	(b)	....	j1,814	2,000
1881....	97,190	97,133	36,145	(b)	....	(b)	209	(b)	(b)	....	3,628	4,000
1882....	121,048	120,990	38,224	(b)	10,094	(b)	186	(b)	362	600	3,168	3,500
1883....	131,241	132,052	47,536	(b)	17,097	i3,805	136	12,462	(b)	....	(b)	....
1884....	100,760	103,444	49,791	(b)	17,983	(b)	275	11,860	(b)	....	1,814	2,000
1885....	79,511	81,796	43,671	(b)	12,786	(b)	320	19,255	(b)	....	(b)	....
1886....	112,268	114,120	40,268	(b)	17,525	(b)	387	14,814	182	200	(b)	....
1887....	105,548	110,635	39,492	(b)	21,837	(b)	626	23,493	145	800	(b)	....
1888....	113,217	121,579	37,749	(b)	13,995	(b)	96	6,460	153	338	(b)	....
1889....	133,669	143,750	41,646	(b)	10,151	(b)	60	2,178	154	680	(b)	....
1890....	132,453	140,003	46,440	(b)	32,659	(b)	241	(b)	154	750	(b)	....
1891....	146,816	138,735	51,919	(b)	....	(b)	38	(b)	208	(b)	(b)	....
1892....	147,223	156,108	68,963	(b)	10,651	7,384	100	8,691	159	700	(b)	....
1893....	89,129	95,509	60,634	(b)	h16,904	(b)	108	10,538	(b)	....	(b)	....
1894....	96,317	97,529	75,761	(b)	27,215	(b)	22	1,876	68	725	(b)	....
1895....	120,929	(b)	72,236	(b)	27,375	(b)	99	(b)	(b)	(b)	(b)	....
1896....	118,378	122,614	51,105	(b)	28,187	(b)	117	8,798	(b)	(b)	(b)	....

(a) From the *Annual Reports of the Department of Mines of Nova Scotia.* (b) Not stated in the official reports. (c) Includes grindstones. (d) The figures of the coal production of Nova Scotia from 1880 to 1896 are published in THE MINERAL INDUSTRY, Vol. II. (e) Represents ore. (f) The figures of the gold production of Nova Scotia from 1821 to 1891 inclusive are to be found in THE MINERAL INDUSTRY, Vol. I. (g) Includes 50 tons ground gypsum, value $225. (h) There was also produced 2,050 barrels, value $2,050. (i) Includes value of ankerite. (j) Includes whetstones.

MINERAL PRODUCTION OF ONTARIO. (a)

Year.	Brick—Number and Value.						Building Stone.					
	Common.		Pressed.				Dimension Stone. Cubic Feet.		Heads and Sills—Cu. Ft.		Coursing Stone—Sq. Yds	
			Plain.		Fancy.							
1892 ...	175,000,000	$980,000	20,842,000	$198,850	1,323,000	$32,253	2,600,000	$680,000	50,000	$26,000	64,000	$42,000
1893....	162,350,000	932,500	20,208,000	b217,873	1,373,700	(c)	1,400,000	260,000	44,700	21,000	170,000	180,000
1894....	131,500,000	690,000	22,460,000	198,510	2,896,000	34,160	1,340,000	360,470	47,070	15,900	22,000	36,000
1895....	126,245,000	705,000	15,253,370	115,695	2,312,497	24,075	(d)	....	(d)	....	(d)	....
1896....	105,000,000	577,000	10,774,400	88,945	1,256,600	9,900	(d)	....	(d)	....	(d)	....
1897....	(g)	....	7,148,908	53,727	895,000	9,350	(g)	....	(g)	....	(g)	....

Year.	Building Stone. *Continued.*			Calcined Plaster, etc. Metric Tons.		Cement—Barrels.				Cobalt. Metric Tons		Copper. Metric Tons.	
	Rubble, etc. Cubic Yards.		Total Value.			Natural Rock.		Portland.					
1892....	730,000	$132,000	$880,000	e2,258	$35,690	54,155	$38,580	20,247	$47,417	7.7	$3,713	1,756	$232,135
1893....	410,000	260,000	721,000	f 145	15,000	74,853	63,567	31,924	63,848	17.2	9,400	1,298	115,200
1894....	228,000	142,000	554,370	1,036	22,697	55,323	48,774	30,580	61,060	2.9	1,500	2,493	195,750
1895....	(d)	....	438,000	402	13,095	55,219	45,145	58,699	114,332	(g)	....	2,146	160,913
1896....	(d)	....	394,000	685	10,250	60,705	44,100	77,760	188,280	(g)	....	1,095	190,660
1897....	(g)	....	....	(g)	....	84,670	76,123	96,825	170,302	(g)	....	2,495	200,067

Year.	Gold.			Gypsum. Metric Tons.		Lime—Bushels.		Mica. Metric Tons.		Natural Gas. 1,000 Cubic Feet.		Nickel. Metric Tons.	
	Ore. Met. Tons.	Metal.											
		Kg.	Value.										
1892....	3,865	(g)	$86,900	3,510	$14,100	2,600,000	$350,000	6.8	$1,500	(g)	$160,000	1,888	$590,902
1893....	5,044	52.7	32,960	2,556	7,363	2,700,000	364,000	63.5	8,600	2,342,900	238,200	1,489	454,702
1894....	2,202	62.9	32,776	2,951	9,760	2,150,000	280,000	(g)	....	1,653,500	204,179	2,332	612,724
1895....	5,896	94.2	50,281	3,059	7,471	2,090,000	280,000	22.6	2,900	3,320,000	282,986	2,100	404,861
1896....	12,059	222.5	121,848	3,175	10,500	1,880,000	220,000	2.2	2,425	(g)	276,710	1,768	357,000
1897....	(g)	354.9	190,244	1,568	17,905	(g)	....	(g)	....	(g)	308,448	1,813	359,651

Year.	Petroleum.										
	Crude. Imperial Gallons. (h)		Refined Products. (h)								
			Illuminating Oils. Imp. Gals.		Lubricating Oils. Imp. Gals.		All Other Oils. Imp. Gals.		Paraffine Wax. Metric Tons.		Fuel Products
1892....	28,000,000	$1,000,000	10,862,894	$919,815	3,457,570	$138,304	7,654,723	$272,577	29.4	$70,239	(g)
1893....	34,055,000	1,099,868	13,322,320	1,372,209	4,289,847	277,500	11,220,705	323,156	102.0	143,325	$72,500
1894....	34,912,360	1,094,852	14,349,472	1,337,040	3,817,181	242,688	10,632,141	343,416	1,249.0	152,467	71,326
1895....	33,351,997	1,403,960	10,924,826	1,237,328	2,400,404	205,591	7,081,717	285,306	891.0	86,608	79,589
1896....	27,880,588	1,222,307	11,342,880	1,263,230	2,288,047	204,946	7,821,262	340,054	695.2	76,250	70,815
1897....	25,556,591	(g)	10,891,337	1,131,083	1,959,810	199,755	8,970,974	358,875	970.4	83,378	(g)

Year.	Pottery.	Salt. Metric Tons.		Sewer Pipe.	Silver Ore. Metric Tons.		Terra Cotta.	Tiles—Thousands.				Total Value.
								Drain.		Roofing.		
1892....	$80,000	39,360	$162,700	(g)	9.07	$732	$20,119	10,000	$100,000	333	$3,613	$5,874,139
1893....	115,000	43,953	149,850	$230,000	453.6	2,500	(c)	17,300	190,000	53	(c)	6,120,753
1894....	134,000	31,947	115,551	207,000	*Nil.*	....	52,360	25,000	260,000	100	1,200	6,086,758
1895....	108,000	46,275	188,101	133,159	*Nil.*	....	38,500	14,330	157,000	375	6,200	5,170,138
1896....	104,000	40,657	204,910	49,875	*Nil.*	....	24,190	13,200	144,000	170	6,800	5,235,009
1897....	(g)	49,611	249,880	78,551	*Nil.*	....	35,800	(g)	....	(g)	78,551	3,899,821

(a) From the *Annual Reports of the Bureau of Mines of Ontario*, Toronto. In 1894 there was also produced sand and gravel 733,500 cubic yards, value $203,450. (b) Comprising the values of plain and fancy pressed brick, roofing tile, and a quantity of ornamental and porous terra cotta. (c) Value included with that of plain pressed brick. (d) Quantity not stated, and value included in the total of building stone. (e) Comprising 2,160 metric tons of phosphate of lime, value $23,810, and 98 metric tons of alabastine and plastico, value $11,880. (f) Comprising 127 metric tons of alabastine and plastico, value $14,800, and 18 metric tons of phosphate of lime, value $200. (g) Not reported. (h) One barrel of crude oil is reckoned at 35 imperial gallons, and 1 barrel refined at 42 imperial gallons.

CHILE.

THERE are no offical statistics of mineral production in Chile. The exports and imports are summarized in the subjoined table. With respect to the most important articles of mineral production, namely, copper and nitrate of soda, the exports practically represent the production. This is also the case with respect to iodine and borate of lime.

MINERAL EXPORTS OF CHILE. (*a*) (IN METRIC TONS AND CHILEAN DOLLARS.)

Year.	Borate of Lime.		Borax.		Clay.		Coal.		Cobalt Ore.		Copper Matte.	
1890....	3,536	$176,810	87	$5,565	(*b*)	....	194,675	$1,674,394	(*b*)	....	1,490	$230,619
1891....	6,342	318,080	708	106,969	(*b*)	....	149,462	2,053,988	(*b*)	....	2,339	338,556
1892....	2,908	163,633	108	16,140	6	$120	215,140	1,535,059	(*b*)	....	298	32,304
1893....	4,587	229,328	(*b*)	....	1	10	209,711	1,677,904	(*b*)	....	2,966	296,579
1894....	6,700	335,008	(*b*)	....	(*b*)	....	205,201	1,641,608	4.6	$230	342	34,230
1895....	4,425	221,263	107	21,380	(*b*)	....	195,115	1,560,920	13.4	915	417	41,673
1896....	7,486	....	......	....	......	....	208,136	....	....	....	....	....

Year.	Copper and Silver Matte.		Copper, Silver and Gold Matte		Copper Ore.		Copper and Silver Ore.		Copper, Silver and Gold Ore—Kg.		Copper, in Bars.	
1890....	2,510	$879,978	(*b*)	....	1,176	$58,793	(*b*)	....	(*b*)	....	24,288	$7,718,840
1891....	1,681	682,276	(*b*)	....	5,874	210,259	(*b*)	....	(*b*)	....	17,464	4,872,964
1892....	1,719	841,276	(*b*)	....	5,239	261,954	(*b*)	....	(*b*)	....	19,144	5,076,922
1893....	1,813	822,034	(*b*)	....	8,299	414,950	(*b*)	....	(*b*)	....	19,328	4,844,353
1894....	1,508	245,223	2.5	$503	11,106	444,227	90.3	$11,027	460	$58	19,640	4,372,238
1895....	664	184,424	15.3	3,060	6,963	278,515	84.4	8,849	2,012	402	20,042	4,602,114
1896....	......	....	....	....	6,159	....	....	....	....	....	20,592	....

Year.	Earth for Smelting Furnaces. Kg.		Gold Bullion. Kg.		Gold Ore.		Iodine.		Iron Ore.		Lead, Argentiferous, in Bars.	
1890....	(*b*)	....	665.2	$532,145	1,818	$418,199	420	$4,197,420	(*b*)	....	114	$48,752
1891....	(*b*)	....	599.7	479,789	284	69,142	424	4,240,190	(*b*)	....	116	8,108
1892....	1,100	$22	954.5	763,638	97	19,010	514	5,138,460	(*b*)	....	128	8,777
1893....	5,800	116	758.4	602,761	168	33,596	595	5,953,420	(*b*)	....	73	4,912
1894....	53,155	1,066	1,475.4	1,172,355	192	39,243	323	3,332,780	(*b*)	....	87	6,072
1895....	(*b*)	....	1,184.5	247,749	270	54,063	144	1,442,580	305	$15,255	98	4,637
1896....	....	....	....	....	....	....	206	....	....	....	....	....

Year.	Lime.		Manganese Ore.		Other Ores.	Saltpeter.		Silver Ore.		Silver and Gold Ore.	
1890....	3.2	$64	50,997	$509,975	$2,400	1,026,298	$36,950,339	1,676	$926,375	1,231	$275,554
1891....	1.0	20	35,610	356,106	2,800	891,727	32,418,491	611	174,289	87	65,343
1892....	36.2	771	51,685	516,851	3,500	797,827	31,785,060	920	419,301	3	961
1893....	0.8	16	36,741	367,410	70	947,023	39,211,918	330	206,996	38	9,225
1894....	7.4	148	47,994	479,939	1,150	1,081,337	44,327,518	370	401,449	56	12,383
1895....	1.2	26	24,075	241,383	2,800	1,220,427	45,528,510	2,137	1,051,084	113	28,255
1896....	....	....	26,152	....	....	1,116,757	....	2,750	....	....	....

Year.	Silver, in Bars, etc. Kg.		Silver, Old. Kg.		Silver-Lead Ore.		Silver Sulphuret Ore.		Tin.	
1890....	(*b*)	....	254	$7,630	630	$94,449	39	$48,779	(*b*)	....
1891....	(*b*)	....	584	17,519	124	74,238	131	166,023	(*b*)	....
1892....	(*b*)	....	1,148	34,535	184	33,420	103	117,030	(*b*)	....
1893....	(*b*)	....	2,353	70,587	28	1,982	140	175,337	(*b*)	....
1894....	153,723	$3,857,481	2,175	43,556	15	1,000	127	165,093	4.2	$1,266
1895....	148,747	3,367,412	375	7,494	21	2,050	99	123,155	(*b*)	....
1896....	151,384	....	....	....	....	....	....	....	....	....

(*a*) From the *Estadística Comercial de la República de Chile.* Valparaiso, 1895, excepting the figures for 1896, which are from *British Consular Report No. 1991.* (*b*) Not reported.

MINERAL IMPORTS OF CHILE. (*a*) (IN METRIC TONS AND CHILEAN DOLLARS.)

Year.	Bitumen for Pavements.		Brass.		Cement, Roman.		Coal.		Copper.			
									Sheets.		For Various Uses	
1894....	118	$25,600	86	$41,914	12,302	$252,314	595,639	$4,752,966	37	$20,151	81	$18,366
1895....	190	38,901	82	36,776	18,236	365,550	574,068	4,578,067	18	9,780	57	15,478

Year.	Earth for Smelting Furnaces.		Gold Coin.		Iron.								Lead, Bars and Sheets.	
					Bars and Ingots		Hoops.		Sheets, Ungalv.		Sheets, Galv.			
1894....	88	$2,422	....	$179,595	14,397	$678,305	959	$62,012	4,113	$333,082	10,451	$1,260,622	96	$15,117
1895....	177	3,980	....	392,900	16,506	772.723	1,198	84,794	4,714	375,848	5,972	719,721	194	27,750

Year.	Quicksilver.		Salt.				Silver.						Soda, Caustic.	
			Common.		Refined.		Bars—Kg.		Coin.		Ore.			
1894....	142	$144,564	5.417	$39,789	109	$8,353	......	....	.....	$89,241	66	$15,557	1,433	$85,475
1895....	106	106,277	3,192	23,042	246	12,116	17.3	$954,255	.....	112,430	58	21,383	2,111	123,102

Year.	Steel, Bars and Sheets.		Sulphate of Copper.		Sulphur.		Tin.		Whiting and Gypsum.		Zinc.			
											Bars.		Sheets.	
1894....	3,198	$332,223	253	$36,275	2,291	$136,596	447	$61,936	522	$11,973	74	$9,714	352	$45,714
1895....	7,142	857,400	134	18,855	1,679	100,961	804	118,046	796	20.674	7	944	309	55,830

(*a*) From the *Estadística Comercial de la República de Chile*, Valparaiso, 1895.

CHINA.

THERE are no official statistics of mineral production in China. The exports and imports as reported by the Imperial Maritime Customs officials are summarized in the following tables:

MINERAL IMPORTS OF CHINA. (a) (IN METRIC TONS AND DOLLARS.)

Year.	Brass Wire.		Cement.		Chinaware, Fine and Coarse.		Coal.		Colors.		Copper. Bar, Rod, Sheets, Plates, Nails.	
1892....	191.2	$61,587	(b)	....	(b)	....	404,602	$2,148,223	958.2	$74,402	554.4	$152,744
1893....	142.2	41,060	(b)	....	(b)	....	435,803	2,012,220	914.9	63,429	569.1	133,292
1894....	217.6	50,060	9,950.5	$123,604	514.0	$70,586	494,075	2,480,484	1,529.5	124,010	811.7	178,633
1895....	159.8	38,343	(b)	105,943	203.3	37,518	581,590	2,715,416	2,675.6	122,542	539.5	105,414
1896....	192.5	46,780	(b)	170,041	408.1	53,083	684,912	2,867,241	3,153.7	233,470	589.3	123,741

Year.	Copper—*Continued.*						Flint Stones.		Glass.		
	Slabs and Ore, Unmanufactured		Wire.		Wares, Unclassified.				Window—Boxes.		Wares.
1892....	1,886.5	$467,764	85.6	$30,008	30.9	$14,058	2,397.9	$22,595	64,734	$170,389	....
1893....	2,092.1	491,033	82.8	26,318	98.5	81,290	732.6	6,663	111,812	267,684	....
1894....	1,596.9	296,917	91.8	21,994	73.5	21,702	1,642.8	12,011	103,470	194,996	$162,117
1895....	980.8	224,237	69.9	18,915	102.4	27,930	2,261.7	17,367	80,881	165,335	185,748
1896....	2,285.4	511,674	113.8	29,985	99.4	40,589	2,585.4	33,123	111,586	281,963	278,652

Year.	Iron.											
	Bar.		Hoop.		Nail-Rod.		Old.		Pig and Kentledge.		Sheets and Plates.	
1892....	8,069.9	$314,202	738.8	$26,450	18,159	$604,014	42,574	$869,908	5,869.3	$19,037	2,678.9	$140,707
1893....	6,512.4	251,580	930.8	37,605	17,950	623,115	30,318	596,626	3,753.4	77,049	2,818.2	142,673
1894....	7,565.4	234,472	1,455.4	52,775	20,856	573,825	30,810	540,846	5,453.4	102,694	3,442.7	157,716
1895....	8,745.9	309,540	1,401.2	48,544	16,358	480,478	25,009	419,298	7,378.5	138,497	3,664.4	184,394
1896....	9,881.5	314,737	1,949.4	81,797	26,677	761,381	52,485	946,837	8,752.3	155,860	4,861.1	229,416

Year.	Iron—*Continued.*			Jadestone.		Lead.				Machinery
	Wire.		Wares, Unclassified			Pig.		Tea and Sheet.		
1892....	4,065.7	$279,294	$363,965	240.0	$120,962	13,383	$833,800	133.2	$11,721	$634,990
1893....	3,717.7	205,575	266,793	253.8	147,660	10,694	648,536	141.9	12,247	893,425
1894....	2,078.1	114,532	123,185	152.8	90,402	12,799	720,873	120.5	9,110	862,228
1895....	2,214.3	133,506	115,700	272.0	225,497	10,858	646,258	122.8	8,199	1,908,164
1896....	2,991.3	173,474	421,083	264.2	216,728	10,114	622,690	248.1	17,323	1,672,197

Year.	Metals, Unclassed.	Nickel.		Paints.		Petroleum—Liters.		Quicksilver.		Spelter.	
1892....	$315,063	(b)	....	1,384.6	$361,084	184,144,301	$4,497,115	156.7	$173,085	2,698.4	$294,551
1893....	288,006	(b)	....	2,501.8	614,522	227,181,608	5,348,347	78.1	79,469	4,734.0	470,781
1894....	253,727	38.6	$29,855	2,025.0	398,839	316,674,095	6,164,092	67.5	59,543	570.5	42,231
1895....	322,425	120.3	93,220	(b)	420,138	236,319,349	5,220,238	73.7	69,792	190.3	14,095
1896....	278,153	104.1	67,634	(b)	624,690	304,190,319	7,357,490	91.0	101,680	1,116.0	97,020

Year.	Steel.				Tin.				White Metal. (German Silver)		Yellow Metal. Bar, Rod, Sheets, and Nails.	
	Common.		Mild, or Iron Ingots.		Plates.		Slabs.					
1892....	3,230.8	$186,904	(b)	....	1,086.3	$87,093	4,048.3	$1,881,118	(b)	....	1.592.1	$327,787
1893....	7,382.2	334,965	(b)	....	940.7	66,909	4,080.6	1,798,956	(b)	....	1,705.7	350,532
1894....	3,575.7	212,699	3,115.9	$95,251	1,429.0	81,105	4,485.2	1,495,009	172.3	$83,125	1,537.4	248,724
1895....	2,766.0	168,062	3,573.4	118,324	3,318.0	195,276	4,590.3	1,540,592	139.7	74,793	1,569.4	236,978
1896....	5,181.9	369,762	9,758.9	220,547	1,880.7	123,901	5,516.4	1,785,541	182.1	82,958	1,719.3	305,514

RE-EXPORT OF FOREIGN GOODS FROM CHINA. (a) (IN METRIC TONS AND DOLLARS.)

Year.	Brass Wire.		Cement.		Chinaware.		Coal.		Colors.		Copper Ore and Manufactures.	
1892....	0.078	$48	(b)	....	(b)	....	67,711	$356,840	4.4	$330	4.388	$10,064
1893....	0.477	174	(b)	....	(b)	....	61,381	290,116	(b)	....	0.125	87
1894....	(b)	....	(b)	....	(b)	....	47,950	254,081	10.8	2,906	14.33	883
1895....	(b)	....	(b)	....	(b)	....	48,889	234,380	143.7	18,265	47.8	8,663
1896....	(b)	....	11.6	$156	1.3	$203	42,082	271,957	31.8	7,989	193.4	41,782

Year.	Glass.			Iron.							Lead.	
	Window. Boxes.		Wares.	Bar, Hoop, Nail-Rod, Sheets, Plates, and Wire.		Old.		Pig and Kentledge.		Unclassed.		
1892....	361	$890	(b)	554.2	$27,968	209.6	$4,840	1.0	$20	$868	48.3	$2,949
1893....	444	1,023	(b)	755.4	30,803	140.3	3.188	178.4	3,684	2,192	280.6	16,045
1894....	758	1,854	(b)	704.0	29,738	170.1	2,604	150.6	2,878	3,351	18.7	1.071
1895....	1,046	2,018	$1,894	1,628.8	64.041	210.1	3,743	152.0	2,815	484	80.5	4,806
1896....	222	580	2,252	1,412.3	58,733	334.5	7,197	154.4	2,524	4,544	98.4	6,890

Year.	Metals, Unclassed.	Nickel.		Paints.		Petroleum—Liters.		Quicksilver.		Spelter.	
1892....	$868	(b)	....	9.2	$1,519	454	$10	(b)	....	59.4	$6,304
1893....	2,186	(b)	....	19.7	9,323	4,770	93	(b)	....	(b)	....
1894....	3,351	(b)	....	34.4	11,925	500	8	(b)	....	(b)	....
1895....	14,790	1.269	$1,005	(b)	5,506	3,262,668	72,576	8.6	$7,709	(b)	....
1896....	10,825	1.330	936	(b)	11,985	2,302,730	61,587	3.7	4,048	(b)	....

RE-EXPORT OF FOREIGN GOODS FROM CHINA. *Concluded.*

Year.	Steel.		White Metal. (German Silver)		Yellow Metal.	
1892....	23.0	$1,393	(b)	....	4.0	$684
1893....	29.7	2,262	(b)	....	4.8	912
1894....	29.3	1,761	(b)	....	24.6	4,261
1895....	173.6	7,608	7.1	$3,596	18.2	2,946
1896....	377.7	15,733	(b)	....	2.1	446

EXPORT OF NATIVE GOODS FROM CHINA. (a) (IN METRIC TONS AND DOLLARS.)

Year.	Chinaware, Earthenware, and Pottery.		Glassware, Bangles, etc.		Gold and Silver Ware.	
1892...	16,297	$1.159,889	1,311.7	$373,171	1.787	$83,046
1893...	19,195	1,181,681	1,397.2	378,278	2.087	85,412
1894...	18,668	947,975	1,347.8	304,160	2.176	74,840
1895...	32.783	1,232.906	1,510.6	353,929	3.148	95,697
1896...	21,766	1,318,955	1,111.9	316,891	3.083	120,149

(a) From the *Returns of Trade and Trade Reports of the Imperial Maritime Customs*, Shanghai, China. In these reports the unit of quantity is chiefly the "picul," and that of value the "Haikwan-tael." In converting the original data to metric tons and dollars, the following relations were used: 1 picul = 0.060453 metric ton; in 1892, 1 Haikwan-tael = $1.07 American gold; in 1893, 96c.; in 1894, 77c.; in 1895, 80c.; in 1896, 81c., at the average sight exchange on New York, London, Paris, Berlin, Calcutta, and Hong-Kong respectively. (b) Not reported.

FRANCE.

THE official statistics of mineral production in France and her Colonies are summarized in the subjoined tables. With respect to the most important substances, reference should be made to the respective captions elsewhere in this volume.

MINERAL PRODUCTION OF FRANCE. (*a*) (IN METRIC TONS; 5f. — $1.)

Year.	Alunite.		Antimony Ore.		Asphaltum.		Bauxite.		Bituminous Substances. (*c*)		Copper Ore.	
1891..	(*b*)	....	5,316	$183,518	15,070	$132,407	22,260	$38,156	260,626	$338,889	16	$1,625
1892..	(*b*)	....	5,108	185,299	14,690	128,702	23,296	39,305	224,311	335,649	251	6,078
1893..	253	$2,530	7,171	180,069	13,608	123,165	33,923	52,249	221,663	322,441	(*b*)	....
1894..	354	3,540	6.144	81,281	14,336	129,550	26,032	32,588	230,603	351,561	(*b*)	....
1895..	330	3,300	5,396	68,004	e15,705	138,065	2,530	10,938	266,660	368,632	(*b*)	....
1896..	171	1,710	5,675	68,544	17,717	150,263	33,820	48,833	225,784	348,187	106	704

Year.	Iron Ore.		Iron Pyrites.		Lead-Silver Ore.		Manganese Ore.		Mineral Fuel.	
									Coal.	
1891..	3,579,286	$2,557,064	246,827	$682,412	25,897	$946,324	15,343	$90,316	25,501,595	$68,004,835
1892..	3,706,748	2,516,168	230,480	572,656	21,656	673,164	32,406	205,074	25,697,233	64,038,768
1893..	3,517,438	2,339,169	231,025	561,284	24,599	530,742	38,060	290,073	25,173,792	58,105,463
1894..	3,772,101	2,459,461	283,439	684,908	29,055	473,920	32,751	200,275	26,964.125	60,747,709
1895..	3,679,767	2,341,711	253,416	639,414	21,503	448,835	30,871	184,143	27,582,819	60,930,290
1896..	4,069,390	2,565,205	282,064	712,986	19,042	450,709	31,318	185,717	18,750,452	62,516,753

Year.	Mineral Fuel—*Continued.*				Petroleum, Crude.		Salt.		Sulphur Ore. (*d*)		Zinc Ore.	
	Lignite.		Peat.									
1891..	523,298	$979,048	168,365	$387,454	9,926	$239,460	810,675	$2,827,777	6,749	$20,072	56,338	$1,285,504
1892..	481,468	896,665	168,445	394,251	8,008	191,160	978,747	3,353,390	7,231	20,972	69,209	1,481,111
1893..	478,189	852,720	174,290	460,974	8,710	189,580	1,114,827	3,317,471	3,733	13,028	77,466	1,061,964
1894..	452.780	804,321	131,717	356,606	8,762	192,573	890,607	2,787,624	851	2,747	80.065	825,867
1895..	437,074	779.554	131,547	366.439	9,446	215,002	871,812	2,406,155	4,213	14,077	72,989	873,765
1896..	439,448	776,938	130,207	379,047	9,292	209,184	1,042,614	2,473,568	9,720	25,660	81,346	1,160,021

METALLURGICAL PRODUCTION OF FRANCE. (*a*) (IN METRIC TONS; 5f. — $1.)

Year.	Aluminum.		Antimony.		Copper.		Iron, Pig.		Iron, Wrought.		Steel.	
1891....	36	$85,520	880	$177,153	2,125	$635,471	1,897,387	$24,827,169	833,409	$29,546,016	638,530	$33,497,538
1892....	75	125,580	754	148,362	2,163	566,894	2,057,258	24,978,706	828,519	29,533.129	682.527	36,823.618
1893....	137	194,900	868	157,300	6,587	1,507,700	2,003,096	23,346,911	808,171	28,047,473	664,032	33,366.862
1894....	270	274,400	1,012	136,024	6,415	1,353,574	2,069,714	23,600,457	785,781	25,794,576	674,190	33,895,860
1895....	360	360.000	779	98,734	8,245	1,872,740	2,003,868	22,264,312	756,793	23,443,660	714,523	36.645,671
1896....	370	259,000	969	130,217	6,544	1,641,876	2,339,537	26,476,584	828,758	25,343,590	916,817	41,896,067

Year.	Lead. (*f*)		Litharge.		Nickel.		Gold—Kg.		Silver—Kg.		Zinc.	
1891........	6,680	$417,116	68	$3,906	330	$336,000	220	$140,800	71,308	$2,281,696	20,596	$2,070,333
1892........	8,776	510,478	49	2,619	1,244	1,236,400	210	144,060	108,247	2,994,168	20,609	1,998,956
1893........	8,119	404,187	33	1,617	2,045	1,237,500	300	192,000	98,077	2,550,002	22,419	1,848,649
1894........	8,696	362,688	62	2,994	1,545	1,237,500	376	240,640	96,955	2,133,010	28,887	1,815,439
1895........	7,627	365,422	(*b*)	....	1,545	1,087,500	380	261,744	71,073	1,563,606	24,230	1,781,515
1896........	8,232	444,371	(*b*)	....	1,545	921,500	327	225,637	70,479	1,592,825	35,585	2,922,628

(*a*) From *Statistique de l'Industrie Minérale.* (*b*) Not reported. (*c*) Includes pure bitumen, bituminous schist, bituminous sand, and asphaltic limestone. (*d*) Sulphur and limestone impregnated with sulphur. (*e*) Including briquettes. (*f*) Lead produced from native ores only, and does not include the metal produced from foreign ores and bullion.

MINERAL IMPORTS OF FRANCE. (*a*) (IN METRIC TONS; 5f. = $1.)

Year.	Bituminous Substances. (*b*)		Coal. (*c*)		Copper.		Gold.	Silver.	Iron and Steel.		Cast Iron, Crude.	
1892..	312,000	$10,509,600	10,357,000	$36,921,000	24,384	$6,796,600	$77,520,000	$24,000,000	57,790	$1,902,200	84,520	1,835,600
1893..	360,000	11,689,600	11,401,000	36,464,800	29,880	7,276,200	61,094,356	31,743,279	82,529	2,000,600	98,616	2,262,800
1894..	59,980	1,439,600	11,644,000	34,335,400	30,300	6,863,800	92,308,712	17,719,346	50,034	1,867,800	47,118	714,600
1895..	43,975	679,600	10,261,069	42,953,250	33,196	8,859,400	50,775,089	28,230,595	66,240	1,619,400	36,247	581,200
1896..	30,954	619,080	10,179,320	34,587,600	47,125	10,888,800	59,767,860	31,150,154	48,423	1,661,400	18,323	369,000
1897..	29,930	(*d*)	10,457,270	(*d*)	55,953	(*d*)	(*d*)	(*d*)	60,804	(*d*)	35,633	(*d*)

Year.	Lead.		Nickel.		Nitrate of Soda.	Stone.	Sulphur.		Tin.		Zinc.	
1892..	72,721	$5,166,200	2,703	$1,456,400	$9,013,600	$4,456,000	98,721	$2,321,600	7,085	$3,382,600	29,884	$3,305,400
1893..	77,679	5,262,800	1,866	1,046,200	6,034,400	4,925,800	98,750	2,329,200	8,890	3,683,000	35,200	3,781,200
1894..	84,167	5,236,800	267	269,400	7,609,400	4,989,000	112,536	1,689,200	8,137	2,969,400	33,652	2,787,400
1895..	66,241	4,626,800	252	300,600	8,624,200	3,144,200	110,989	1,598,400	7,691	2,645,800	25,652	1,988,000
1896..	79,749	5,482,000	421	374,600	9,455,200	2,983,000	111,515	1,607,800	8,434	2,921,800	33,459	2,576,900
1897..	86,586	(*d*)	315	(*d*)	(*d*)	(*d*)	136,111	(*d*)	7,541	(*d*)	30,210	(*d*)

Year.	Alum.	Antimony Ore.	Borax.	Bromides.	Carbonate of Lead.	Cement	Chlorhydric Acid.	Chloride of Lime.	Chloride of Potash.	Chromate of Potash.	Copper Ore.	Gold Ore. Kg.
1892..	....	123	....	....	....	....	....	....	....	....	16,850	13,277
1893..	....	175	....	....	....	....	....	....	....	....	20,527	2,606
1894..	....	153	....	....	....	....	....	....	....	....	10,191	*e*24,824
1895..	109	....	442	12	1,077	13,441	2,777	1,047	3,524	2,875	10,450	*b*8,811
1896..	40	....	255	13	891	14,395	2,468	2,032	11,496	2,838	8,584	*e*101,499
1897..	63	(*d*)	263	18	1,328	15,141	2,119	1,713	11,624	2,851	11,960	(*d*)

Year.	Iron.		Kaolin.	Lead Ore.	Lime.	Manganese Ore.	Marble.	Mercury	Nitrate of Potash.	Nickel Ore.	Nitric Acid.
	Ore.	Pyrites.									
1892..	1,684,000	47,502	....	7,281	....	43,888	....	....	....	11,927	....
1893..	1,630,000	56,505	....	5,261	....	35,531	....	....	....	18,236	....
1894..	1,636,458	56,672	....	5,825	....	43,345	....	....	....	14,941	....
1895..	1,651,369	67,980	359	5,032	246,677	41,403	366	178	775	10,303	702
1896..	1,862,065	45,788	387	5,570	283,707	61,585	394	233	2,614	15,756	684
1897..	2,137,903	69,470	423	13,961	331,647	85,518	366	237	1,309	17,450	774

Year.	Oxides.						Petroleum.	Phosphates.	Plaster.	Platinum. Kg.	Potash and Carbonate of.	Sal Ammoniac.	Salt.
	Cobalt	Copper.	Iron.	Lead.	Uranium.	Zinc.							
1892..	....	....	....	....	....	....	....	....	....	....	....	....	....
1893..	....	....	....	....	....	....	....	....	....	....	....	....	....
1894..	....	....	....	....	....	....	....	....	....	....	....	....	....
1895..	5	24	855	1,981	2	802	2,587	1,396	2,412	926	796	9,923	17,528
1896..	5	22	897	1,984	4	987	2,706	1,176	1,774	2,117	1,526	15,255	17,191
1897..	8	28	1,126	2,671	5	1,118	2,886	1,601	1,994	1,065	1,768	27,454	27,300

Year.	Silver Ore. Kg.	Slates.	Soda, Caustic	Stone.		Sulphates.		Sulphide of Mercury.	Sulphuric Acid.	Superphosphate of Lime.	Tin Ore.	Zinc Ore.
				Building.	Paving.	Copper.	Iron.					
1892..	3,539	....	....	....	....	....	....	....	....	....	523	41,931
1893..	4,092,000	....	....	....	....	....	....	....	....	....	78	34,221
1894..	3,159.514	....	....	....	....	....	....	....	....	....	123	34,955
1895..	*f*524,394	8	1,021	95,461	49,762	94,404	3,882	23	3,461	150,758	104	41,622
1896..	*f*1,818,650	12	1,109	72,919	59,164	33,808	3,086	25	3,994	185.602	7	50,899
1897 .	(*d*)	11	1,378	92,936	66,741	30,180	1,363	24	3,147	199,823	149	58,073

(*a*) The figures for 1892–4 inclusive are from *Annales du Commerce Extérieur*, Paris, and for the remaining years from *L'Economiste francais*, March 5, 1898. (*b*) Includes bitumen, bituminous schist and sand, and asphaltic limestone. (*c*) Including coke. (*d*) Not reported. (*e*) Gold and platinum, in ore, sheets, leaves, or threads. (*f*) Silver in ore, sheets, leaves, or threads.

MINERAL AND METALLURGICAL EXPORTS OF FRANCE. (IN METRIC TONS.)

Year.	Aluminum.	Antimony.		Copper.		Gold.		Iron.				Iron Pyrites	Lead.	
		Ore.	Metal	Ore.	Metal	Ore.	Metal	Ore.	Pig.	Cast.	Steel.		Ore.	Metal
1891....	....	1,153	78.0	11.802	6,528	......	6,045	299,000	196,271	145,412	54,019	12,120	13.280	10,657
1892....	42	1,338	90.0	12,387	8,526	......	4,222	305,000	161,173	159,453	30,323	22.455	10,923	10.057
1893....	43	492	165.0	10,198	7,601	5,211	4,222	302,000	130,098	143,652	28,426	38,060	14,082	9,243
1894. .	81	1,173	20.0	4,536	6,598	966	4.448	247,519	140,718	156,638	37,361	48,627	11,868	8,133
1895....	110	832	68.2	1,772	8,829	......	1,853	236,923	15,054	10,755	29,074	37,968	8,670	8,087
1896....	793	736	73.8	1,261	10,494	......	2,201	233,075	25,900	13,944	63,367	14,232	8,607	10,129

Year.	Manganese Ore.	Nickel.		Quicksilver.	Silver—Kg.		Tin.		Zinc.	
		Ore.	Metal.		Ore.	Metal.	Ore.	Metal.	Ore.	Metal.
1891....	1,494	26	210	6	108,222	17,800	88	1,014	31,662	5,177
1892....	8,541	455	319	5	195	18,950	292	918	32,023	7,034
1893 ...	12,123	701	191	5	61,219	21,642	....	973	47,496	8,819
1894....	8,069	241	354	25	51,272	11,472	4	816	58,281	6,595
1895....	16,193	....	408	....	....	13,567	....	650	61,291	5,849
1896....	10,912	....	490	....	....	9,849	....	745	62,415	10,485

MINERAL PRODUCTION OF ALGERIA. (IN METRIC TONS AND DOLLARS; 5f.=$1.)

Year.	Antimony Ore.		Cement.		Clays.		Copper.				Gypsum, for Fertilizing.		Iron.			
							Ore.		Matte.				Ore.		Cast, 2d Fusion.	
1892..	48	$2,470	...	.....	......	....	8,144	$33,800	448	$53,505	......	....	452,608	$807,141	445	$36.074
1893..	79	4.740	...	.....	......	....	6,002	42,808	619	64,160	......	....	398,921	702,368	517	34,916
1894..	175	5,200	...	.....	......	....	......	....	702	64,584	23,900	$114,900	343,880	527,782	536	32,499
1895..	307	7,365	...	.....	......	....	......	....	364	30,800	2,800	1,248	318,416	508,946	537	35,894
1896..	658	18,957	60	$300	48,297	$42,526	......	....	427	39,028	300	138	374,476	583,946	577	35,430

Year.	Lead-Silver Ore.		Lime.				Marble.		Onyx.		Phosphate Rock.		Plaster, Building.	
			Hydraulic.		White.									
1892..	349	$7,463	....	....	....	....	......	....	......	....	....	....	....	....
1893..	212	4,181	....	....	....	....	......	....	......	....	....	....	....	....
1894..	276	4,045	....	....	....	....	......	....	......	....	64,260	$230,888	....	....
1895..	178	2,959	20.000	$120,000	11,890	$39,840	1,112	$32,248	1,764	$182,800	157,836	634,328	34,136	$131,978
1896..	117	2.188	20,000	120,000	9,450	36,480	900	26,100	900	25,530	165,738	500,905	29,870	114,133

Year.	Quicksilver Ore.		Road-Making Material.		Salt.		Sand and Gravel.		Stone, All Kinds.		Zinc Ore.	
1892..	178	$1,323	....	....	24,784	$104,086	....	....	....	....	21,907	$281,022
1893..	757	9,806	... .	....	19,008	93,416	....	....	....	....	24,390	197,966
1894..	866	11,602	....	....	17,830	74,763	....	....	....	....	29,703	163,392
1895..	86	6,210	348,210	$136,137	25,758	102,990	20,400	$2,400	341,494	$146,070	13,967	93,486
1896..	8	500	376,000	147,000	19,658	85,122	41,400	3,280	453,810	167,000	17,587	163,768

Algeria exported in 1891, 13,928 tons of lead and copper ore, and 9,748 tons of zinc ore; in 1892, 12,959 of lead and copper ore, and 21,486 of zinc ore; in 1893, 6762 of lead and copper ore, and 27,344 of zinc ore; in 1894, 2,673 of lead and copper ore, 23,788 of zinc ore, and 71 tons of antimony ore.

MINERAL PRODUCTION OF NEW CALEDONIA. (*a*) (IN METRIC TONS.)

Mineral Substance.	1889.	1890.	1891.	1892.	1893.	1894.		1895.	1896.
Chrome iron ore.....	2,254	3,325	4,343	512	242	2,927	$35,124	8,079	20,086
Cobalt ore............	2,185	3,740	1,343	2,200	2,200	4,112	57,568	4,277	*c*4,823
Copper ore...........	9,500	(*b*)	199	(*b*)	(*b*)	(*b*)	....	....	....
Copper regulus......	(*b*)	259	152	(*b*)	(*b*)	(*b*)	....	....	....
Lead ore.............	2,500	881	236	(*b*)	(*b*)	(*b*)	....	....	....
Nickel ore...........	19,741	22,689	60,921	83,114	69,614	61,24	857,400	29,623	6,417

(*a*) From *Statistique de l'Industrie Minéralé.* (*b*) Not stated in the reports. (*c*) Exports.

MINERAL PRODUCTION OF TUNIS. (*a*) (IN METRIC TONS AND DOLLARS.)

Year.	Salt.		Silver-Lead.		Zinc Ore.			
					Picked.		Calcined.	
1892....	......	....	......	....	....	....	....	....
1893....	7,000	$21,000	10	....	1,100	$18,467	3,300	$43,560
1894....	7,000	(*b*)	(*b*)	....	31,000	(*b*)	(*b*)	....
1895....	8,000	7,200	(*b*)	....	14,800	*c*112,600	(*b*)	....
1896....	5,500	(*b*)	(*b*)	....	9,590	94,100	(*b*)	....

(*a*) From *Annual General Reports on the Mineral Industry of the United Kingdom*, by C. Le Nevé Foster.

(*b*) Not reported.

(*c*) Value corresponding to only 10,800 tons.

GERMANY.

The mineral statistics of the German Empire, together with those of Baden, Bavaria, Prussia, and Saxony are summarized in the subjoined tables.

MINERAL PRODUCTION OF GERMANY. (*a*) (*b*) (IN METRIC TONS AND DOLLARS; 4 marks—$1.)

Year.	Antimony Ore.		Arsenic Ore		Asphaltum.		Boracite.		Coal.		Cobalt, Nickel, & Bismuth Ores		Copper Ore.	
1893...	15	$75	2,758	$25,391	47,238	$89,245	162	$11,662	73,852,330	$124,598,755	4,490	$188,713	584,950	$4,530,794
1894...	(c)	......	2,906	30,006	55,981	112,762	176	11,065	76,741,127	127,275,053	4,524	194,645	588,196	4,060,089
1895...	24	218	3,546	35,311	59,563	113,606	150	8,781	79,169,276	134,723,786	5,180	163,450	638,354	3,844,961
1896...	(c)	......	3,691	46,960	61,552	113,348	184	10,620	85,689,861	148,263,717	4,087	129,688	717,306	4,239,362
1897...	(c)	......	.....	....	......	....	....	....	91,007,624	162,225,494	3,356	291,519	700,619	4,752,573

Year.	Epsomite.		Graphite.		Iron Ore.		Iron Pyrites.		Other Vitriol and Alum Ores.		Kainite.	
1893...	8,818	$17,062	3,140	$52,010	11,457,533	$9,950,266	121,329	$218,687	791	$1,250	646,755	$2,352,284
1894...	8,252	17,999	3,133	45,732	12,392,065	10,544,385	134,787	244,864	465	977	726,524	2,578,208
1895...	7,828	14,856	3,751	50,612	12,349,600	10,268,935	127,036	243,878	351	525	680,174	2,403,339
1896...	2,476	5,478	5,248	72,108	14,162,315	12,849,650	124,950	231,579	369	512	856,290	2,989,736
1897...	....	....	......	....	15,448,212	15,004,045	132,302	291,519	....	....	995,821	3,496,204

Year.	Other Potash Salts.		Lead Ore.		Lignite.		Manganese Ore.		Petroleum.	
1893...	879,477	$2,815,838	168,418	$3,536,042	21,573,823	$13,755,744	40,798	$122,968	18,974	$195,733
1894........	917,049	2,992,149	162,675	3,025,884	22,064,575	13,287,909	43,702	116,412	17,232	243,112
1895........	841,748	2,776,504	161,614	3,234,902	24,788,363	14,502,821	41,327	124,534	17,051	240,614
1896........	924,140	2,997,667	154,660	3,093,214	26,797,880	15,233,273	45,062	120,155	20,395	297,123
1897........	950,367	3,019,848	150,179	3,253,884	29,423,432	16,579,102	....	....	23,303	349,111

Year.	Salt, Rock.		Silver and Gold Ore.		Tin Ore.		Uranium and Wolfram Ores.		Zinc Ore.	
1893........	669,043	$736,029	18,778	$774,617	53	$21,918	44	$10,778	787,911	$3,572,711
1894........	734,937	784,923	19,080	629,672	211	16,309	40	6,194	728,616	2,569,514
1895........	686,940	777,095	10,845	427,047	154	15,197	29	4,449	706,423	2,644,314
1896........	755,833	755,888	18,487	596,604	88	5,881	41	7,081	729,872	4,255,473
1897........	763,412	402,879	9,708	363,271	....	....	....	....	663,850	4,220,339

(*a*) Including Luxemburg. (*b*) From *Vierteljahrs- und Monats-hefte zur Statistik des Deutschen Reichs*; (*c*) Not reported.

METALLURGICAL PRODUCTION OF GERMANY. (*a*) (IN METRIC TONS AND DOLLARS; 4 marks—$1.)

Year.	Antimony and Manganese.		Arsenical Products.		Cadmium—Kg.		Copper Matte & Black Copper.		Copper, Ingot.		Gold—Kg.	
1892........	249	$44,931	1,667	$109,127	3,200	$2,850	626	$24,630	24,781	$6,189,532	2,549	$1,773,602
1893........	407	64.486	1,794	119,588	5,284	5,461	842	65,735	24,011	5,860,517	2,547	1,771,571
1894........	424	65,244	2,389	166,798	6,472	6,886	676	26,921	25,722	5,467,554	3,199	2,226,947
1895........	989	107,960	3,014	207,416	7,047	9,809	789	49,890	25,777	5,818,903	3,547	2,469,379
1896........	1,326	156,111	2,637	221,337	10,000	19,117	598	39,083	29,319	7,293,887	2,487	1,728,936
1897........	1,665	210,744	2,989	270,949	....	....	315	14,380	29,408	7,545,376	2,781	1,934,371

Year.	Iron, Pig.		Lead.		Litharge.		Mineral Paints.		Nickel & Various By-Products. (*b*)		Silver—Kg.		Sulphur.	
1892	4,987,461	$57,394,072	97,742	$5,136,861	3,468	$201,765	2,629	$68,318	1,230	$1,718,561	487,964	$14,268,816	2,155	$54,460
1893	4,986,003	54,081,575	94,659	4,609,353	3,551	198,181	2,993	84,008	1,402	1,708,265	448,092	11,736,868	2,161	51,808
1894	5,380,039	57,892,412	100,751	4,762,392	3,646	192,048	2,834	72,802	997	1,154,757	442,822	9,625,876	2,168	50,209
1895	5,417,548	58,667,695	111,058	5,569,475	3,493	190,806	2,655	72,448	1,143	1,111,074	391,979	8,600,828	2,061	40,094
1896	6,296,272	78,930,749	118,792	6,258,097	3,930	235,698	2,668	75,818	1,391	1,365,330	428,429	9,718,000	2,263	47,181
1897	6,879,541	87,515,168	118,881	7,160,188	3,341	213,699	.....	....	1,464	1,492,337	448,068	9,092,865	.....	....

Year.	Sulphuric Acid.		Sulphates. (*c*)								Tin.		Zinc.	
			Copper.		Iron.		Zinc.		Mixed.					
1892	488,047	$3,716,014	4,024	$281,284	9,491	$56,901	4,390	$65,369	217	$7,684	684	$309,978	139,988	$18,765,510
1893	522,822	3,940,784	4,778	353,377	8,491	42,064	4,527	60,138	232	8,535	951	349,185	142,956	11,821,580
1894	557,908	4,029,659	4,809	363,034	8,922	39,658	4,249	56,815	202	7,436	896	271,804	143,577	10,453,272
1895	537,928	3,713,673	4,688	341,600	9,890	40,579	4,018	55,950	170	6,492	884	266,292	150,286	10,409,160
1896	590,888	3,781,092	6,046	466,478	9,788	39,072	4,811	67,171	165	6,218	459	135,784	153,100	11,777,005
1897	608,767	3,716,509	5,549	470,016	......	....	....	....	....	....	929	287,829	150,789	12,619,181

EXTRACTION OF SALTS FROM AQUEOUS SOLUTION. (*a*)

Year.	Alum.		Aluminum Sulphate.		Common Salt.		Glauber Salt.		Magnesium Chloride	
1892.....	4,370	$117,465	29,588	$570,785	504,687	$3,460.869	74,184	$504,277	14,886	$50,828
1893.....	4,102	115,076	27,082	505,166	504,522	3,494,221	77,145	498,539	12,764	44,444
1894.....	3,914	107,092	26,804	480,174	522,590	3,574,655	71,929	423,218	17,422	50,913
1895.....	3,358	87,372	18,347	316,588	525,396	3,563,226	71,411	406,872	17,039	52,850
1896.....	2,889	69,449	20,553	363,146	547,486	3,661,084	71,958	448,915	17,525	57,386

Year.	Magnesium Sulphate.		Potassium Chloride.		Potassium Sulphate.		Sulphate of Potassium and Magnesium.	
1892..........	23,879	$84,008	123,962	$4,106,579	26,267	$1,072,096	11,593	$228,172
1893..........	27,548	79,240	137,216	4,326,285	27,308	1,119,835	14,199	280,792
1894..........	28,628	88,814	149,775	4,722,049	23,281	958,786	14,156	274,694
1895..........	26,028	107,183	154,427	4,921,179	19,452	805,098	9,877	198,939
1896..........	27,161	107,835	174.515	5,718,559	19,682	813,381	4,623	85,977

(*a*) From *Vierteljahrs- und Monats-hefte zur Statistik des Deutschen Reichs.* (*b*) Including metallic bismuth, cobalt products, and uranium salts. (*c*) There was also produced nickel sulphate and tin chloride as follows: 1891, 143 metric tons, $43,401; 1892, 89 tons, $27,003; 1893, 81 tons, $24,172; 1894, 107 tons, $31,398; 1895, 131 tons, $34,511; 1896, 176 tons, $42,986.

MINERAL IMPORTS OF GERMANY. (*a*) (IN METRIC TONS; unit of value, $1,000; $1 = 4 marks.)

Year.	Alabaster and Marble, Crude.		Aluminum, Nickel Wares, etc.		Ammonia, Sulphate of.		Cement.		Coal.		Cobalt and Nickel.		Coke.	
1892..	21,298	$950	289	$375	34,207	$1,875	22,753	$175	4,436,983	$14,875	1,356	$1,600	465,726	$2,150
1893..	21,520	650	294	300	42,596	2,550	26,854	175	4,664,048	14,925	1,006	950	439,182	1,725
1894..	24,784	750	291	300	36,635	2,375	24,868	175	4,805,971	15,075	431	350	404,179	1,425
1895..	23,785	725	299	300	29,208	1,600	27,351	200	5,117,356	15,825	621	425	461,779	1,675
1896..	26,655	800	335	350	32,061	1,450	32,394	275	5,476,753	15,275	*d* 951	600	393,881	1,625

Year.	Copper and Alloys.				Copper and Brass Manufactures.						Glass Manufactures, All Kinds.		Gold.		
	Crude. (*b*)		Bars and Sheets, Unplated.		Fine.		Wire, Unplated.		Cartridge Cases, Coarse Wares, etc.				Coin.	Bullion.	
1892..	32,498	$7,950	694	$225	555	$450	218	$750	630	$300	2,354	$800	$28,050	24	$16,575
1893..	38,455	8,850	448	125	560	450	151	500	613	300	3,008	925	16,050	27	18,975
1894..	37,032	7,900	495	125	565	450	131	500	539	225	3,008	1,100	50,350	37	25,775
1895..	44,365	10,050	426	125	625	525	171	500	563	250	3,119	1,100	12,475	17	11,875
1896..	56,115	13,675	401	125	797	675	127	500	582	275	2,823	1,050	23,475	45	31,600

Year.	Gold and Silver.				Gold, Silver, and Platinum Ores.		Guano.		Iodide of Potassium, etc.		Iodine.		Iron.			
	Broken, Pagament		Manufactures.										Ore.		Pig.	
1892..	35	$4,225	30	$1,250	19,308	$5,550	58,346	$2,350	2	$25	169	$1,125	1,655,843	$5,600	209,306	$2,525
1893..	41	4,900	32	1,300	20,516	5,125	52,411	2,125	2	(*d*)	394	2,150	1,578,202	5,250	218,998	2,475
1894..	66	5,800	37	1,350	13,935	3,000	47,230	1,850	24	150	431	2,850	2,098,007	6,850	203,948	2,375
1895..	45	4,125	35	975	6,184	1,350	39,638	1,325	22	125	113	750	2,017,136	6,825	188,217	2,250
1896..	39	3,700	34	825	6,024	3,950	38,120	1,150	29	150	94	625	2,586,706	8,700	322,502	4,000

Year.	Iron—*Continued.*																	
	Scrap.		Hoops, Bars, and Ingots.		Angle.		Wrought, in Bars.		Rails.		Wire.		Cast, Crude.		All Other Manufactures.		Pyrites.	
1892..	6,419	$75	440	(*d*)	282	(*d*)	21,085	$825	7,186	$150	4,675	$875	16,758	$2,175	7,219	$1,150	218,272	$975
1893..	8,178	100	511	(*d*)	146	(*d*)	17,054	625	6,310	125	4,946	400	17,711	1,850	7,119	1,000	274,766	1,300
1894..	7,900	100	719	$25	245	(*d*)	19,966	700	3,542	75	4,888	400	14,997	1,800	9,793	1,100	315,115	1,550
1895..	11,339	125	757	25	124	(*d*)	19,777	700	1,831	25	5,583	450	13,749	1,675	11,654	1,225	293,446	1,450
1896..	14,679	175	1,054	25	176	(*d*)	23,770	875	140	(*d*)	6,398	450	19,600	2,450	12,933	1,650	342,852	1,650

Year.	Lead, White.		Lignite.		Lime, Phosphate of.		Manganese Ore.		Mineral Oil.			
									Petroleum.		Lubricating Oil.	
1892..	712	$50	6,701,309	$6,875	169,798	$2,975	9,662	$200	748,488	$15,175	68,150	$2,675
1893..	932	75	6,705,672	6,375	226,923	2,825	12,093	250	765,100	11,825	70,576	4,400
1894..	646	50	6,868,162	6,175	286,812	3,575	14,255	225	785,102	11,375	65,708	2,800
1895..	479	25	7,181,050	9,875	278,046	3,475	22,576	275	811,058	15,400	75,041	3,275
1896..	579	50	7,637,503	11,275	216,950	2,700	63,870	750	858,642	14,950	81,256	3,425

Year.	Porcelain.		Potash.		Potassium Compounds.						Precious Stones, Pearls and Corals, Crude and Set.	
					Chlorate.		Cyanide.		Sulphate.			
1892..	658	$200	1,989	$175	662	$25	....	(*d*)	1,548	$500	95	$1,775
1893..	646	175	2,168	200	828	25	1	(*d*)	1,665	500	77	1,325
1894..	698	200	2,296	200	478	25	1	(*d*)	1,306	25	35	950
1895..	748	200	1,634	125	1,334	50	5	(*d*)	895	25	60	1.125
1896..	806	325	1,430	100	1,058	50	3	(*d*)	708	25	42	1,175

Year.	Roofing Tile, Building Stone, Glazed and Unglazed.		Salt, Common, Rock, etc.		Saltpeter.		Silver.				Slag and Slag Wool.		Slate.	
							Bullion.		Coin.					
1892..	98.346	$350	24,534	$225	924	$100	64	$1,875	30	$775	410,631	$1,275	65,597	$1.125
1893..	98,984	350	23,645	100	647	75	78	2,025	24	575	477,183	1,675	61,543	1,075
1894..	118,010	400	23,440	100	1,135	125	190	4,075	20	375	632,878	2,200	61,401	1,050
1895..	114,020	375	24,286	100	1,005	100	98	2,150	18	350	537,542	1,825	52,418	950
1896..	140,333	475	22,908	100	1,380	125	128	2,900	21	425	680,251	2,525	53,563	1,050

Year.	Soda.				Stassfurt Salts.		Stones.				Superphosphate.		Thomas Slag, Ground.	
	Calcined.		Nitrate.				Crude or Simply Hewn.		Grindstones, Polishing and Whetstones.					
1892..	148	(*d*)	379,899	$16,150	2,010	$25	685,592	$5,150	2,497	$175	86,851	$1,950	69,924	$525
1893..	420	$25	384,710	16,350	1,061	(*d*)	697,448	4,800	2,922	225	110,876	1,800	78,458	1,050
1894..	753	25	404.561	17,200	770	50	859,459	5,375	2,578	200	124,873	2,025	88,443	550
1895..	1,008	25	459,514	17,800	910	50	760,433	3,800	2,734	350	96,099	1,450	92,251	550
1896..	1,295	25	449,028	16,850	143	(*d*)	767,908	3,850	2.869	275	81,740	1,025	83,765	525

Year.	Tin.				Zinc.								Zinc-White, Zinc-Gray, and Lithophone.	
	Crude.		Manufactures		Ore.		Crude.		Drawn and Rolled.		Manufactures			
1892..	8,765	$275	68	$75	41,558	$875	13,021	$1,400	49	....	84	$50	3,008	$350
1893..	10,538	250	69	75	23,883	425	13,211	1,200	74	....	100	50	2,633	250
1894..	10,775	225	64	75	14.712	175	17,988	1,375	275	$25	112	75	2,518	200
1895..	10,581	225	79	75	25,818	300	17,542	1,250	128	....	114	75	2,906	225
1896..	13,798	275	75	75	21,493	325	16,343	1,350	180	....	139	75	2,899	250

(*a*) From *Statistisches Jahrbuch für das Deutsche Reich*, 1897. (*b*) Previous to 1896 includes copper scrap. (*c*) Previous to 1896 includes alum ore. (*d*) Not reported.

MINERAL EXPORTS OF GERMANY. (*a*) (IN METRIC TONS; unit of value, $1,000; $1 = 4 marks.)

Year.	Alabaster and Marble, Crude.		Aluminum, Nickel Wares, etc.		Ammonia, Sulphate of.		Cement.		Coal.		Cobalt and Nickel.		Coke.	
1892..	412	$25	1,317	$1,650	385	$25	432,153	$2,775	8,971,055	$24,975	348	$500	1,717,898	$7,300
1893..	538	25	1,463	1,475	422	25	423,892	2,450	9,677,305	26,125	115	125	1,902,424	7,325
1894..	1,042	50	1,374	1,350	332	25	406,369	2,575	9,739,085	25,300	101	100	2,261,924	8,875
1895..	1,645	75	1,669	1,675	1,836	75	471,124	3,000	10,360,838	26,750	176	125	2,293,328	8,900
1896..	2,174	100	1,977	2,050	2,210	100	478,340	4,100	11,598,757	30,475	143	100	2,216,395	9,000

Year.	Copper and Alloys.				Copper and Brass Manufactures.						Glass Manufactures, All Kinds.		Gold.			
	Crude. (*b*)		Bars and Sheets, Unplated.		Fine.		Wire, Unplated.		Cartridge Cases, Coarse Wares, etc.				Coin.		Crude and in Bars.	
1892..	6,598	$1,675	4,507	$1,350	3,234	$2,500	2,566	$950	4,276	$3,375	91,846	$7,925	48	$30,025	11	$7,425
1893..	7,497	1,775	4,890	1,350	3,860	2,950	3,058	950	5,733	3,550	107,509	8,925	35	21,725	5	3,650
1894..	6,609	1,450	5,007	1,300	4,117	3,100	3,433	1,050	5,870	3,475	110,623	9,225	17	10,875	4	2,450
1895..	6,829	1,425	4,700	1,300	4,912	3,800	3,975	1,250	7,098	4,425	118,199	10,150	25	15,525	7	5,050
1896..	5,996	1,500	5,406	1,700	5,961	4,950	5,910	1,950	6,806	4,875	108,892	9,175	40	25,150	35	24,225

Year.	Gold and Silver Manufactures.		Gold, Silver, and Platinum Ores.		Guano.		Iodide of Potassium, etc.		Iodine.		Iron.					
											Ore.		Pig.		Scrap.	
1892..	85	$6,875	1	......	3,999	$175	109	$750	9	$75	2,276,155	$1,700	113,391	$1,575	64,377	$875
1893..	87	5,975	23	......	6,448	275	105	700	8	50	2,353,398	1,750	108,675	1,475	62,954	775
1894..	84	6,350	12	......	3,347	150	107	725	18	75	2,558,729	1,925	154,647	2,000	77,723	1,025
1895..	88	5,950	359	$50	2,207	75	128	875	23	150	2,480,136	1,850	135,289	1,775	84,814	1,150
1896..	97	7,525	14	25	1,600	50	142	950	26	175	2,642,294	1,975	140,449	1,925	52,466	750

Year.	Iron—*Continued.*														Pyrites. (*c*)	
	Hoops, Bars, and Ingots.		Angle.		Wrought, in Bars.		Rails.		Wire.		Cast, Crude.		Man'factures, All Other.			
1892..	37,184	$750	84,055	$2,425	199,064	$5,350	113,712	$2,550	187,376	$6,400	105,056	$15,900	207,274	$16,300	9,951	$25
1893..	55,565	1,050	107,383	2,775	231,297	5,900	87,360	1,850	191,518	6,525	113,867	17,125	232,948	18,050	15,889	50
1894..	41,992	850	130,458	3,225	300,559	7,375	119,410	2,475	209,818	6,575	125,057	17,450	379,862	20,450	17,510	100
1895..	61,808	1,200	172,863	4,075	277,991	7,000	116,627	2,550	205,331	6,500	135,383	20,450	248,355	18,750	14,223	75
1896..	49,529	1,125	178,887	4,675	259,461	7,175	129,418	3,100	207,116	6,875	153,652	24,325	309,882	23,200	16,838	75

Year.	Lead, White.		Lignite.		Lime.		Manganese Ore.		Porcelain, White and Variegated.		Potash.		Potassium Compounds.					
													Chlorate.		Cyanide.		Sulphate.	
1892..	10,595	$950	18,582	$25	1,497	$25	3,194	$125	14,376	$3,725	12,233	$125	63,242	$2,250	37	$75	20,391	$6,750
1893..	12,343	1,000	22,757	25	4,652	75	2,688	100	15,753	3,375	10,865	1,125	85,858	3,050	38	75	31.855	1,025
1894..	14,437	1,075	20,444	25	3,761	75	2,787	75	15,532	3,325	12,105	1,175	93,913	3,375	36	125	25,357	850
1895..	15,539	1,125	18,814	25	5,813	100	4,461	125	19,441	4,550	13,443	1,100	78,718	2,825	48	150	23,132	775
1896..	16,969	1,325	15,703	25	5,548	100	7,178	150	21,624	3,975	12,673	1,050	85,862	3,075	55	125	16,019	575

Year.	Precious Stones, Pearls and Corals, Crude and Set		Roofing Tile, Building Stone, Glazed and Unglazed.		Salt, Common, Rock, etc.		Saltpeter.		Silver.				Slag and Slag Wool.		Slate.	
									Crude and in Bars.		Coin.					
1892..	10	$1,300	154,960	$950	197,371	$775	8,874	$925	353	$10,350	38	$100	17,273	$50	3,136	$50
1893..	5	775	162,586	1,125	196,095	825	9,652	925	451	11,800	29	700	17,418	50	3,798	50
1894..	5	725	169,110	1.125	237,058	650	13,218	1,325	406	8,725	8	150	21.504	75	4,056	50
1895..	2	425	188,046	1,350	196,344	600	12,928	1,250	259	5,750	4	75	20,432	50	4,489	75
1896..	6	475	287,811	1,775	214,060	625	11,323	1,750	306	6,975	32	650	17,214	50	5,796	100

Year.	Soda.				Stassfurt Salts.		Stones.				Superphosphate.		Thomas Slag, Ground.	
	Calcined.		Nitrate.				Crude or Simply Hewn.		Grindstones, Polishing and Whetstones.					
1892..	34,579	$125	9,846	$450	115,994	$725	537,220	$2,675	11,292	$575	56,075	$1,400	96,707	$850
1893..	30,433	950	13,541	600	212,289	1,825	483,104	2,425	11,516	575	62,800	1,175	80,922	1,100
1894..	33,556	875	14,217	700	228,765	1,425	578,451	2,900	10,909	550	60,569	1,125	85,630	850
1895..	31,418	775	13,437	800	221,184	1,375	505,163	2,525	10,465	650	55,742	975	80,056	525
1896..	41,106	925	9,078	400	285,023	1,575	620,394	3,100	11,914	900	57,391	850	134,257	875

Year.	Tin.				Zinc.								Zinc-White, Zinc-Gray, and Lithophone.	
	Crude.		Manufactures		Ore.		Crude.		Drawn and Rolled.		Manufactures			
1892..	566	$275	714	$700	24,475	$525	53,287	$5,525	16,304	$1,875	789	$550	10,595	$950
1893..	565	250	731	700	25,059	450	62,592	5,325	17,459	1,675	898	625	12,348	1,000
1894..	618	225	819	725	35,682	425	61,800	4,525	16,088	1,350	842	575	14,437	1,750
1895..	700	225	975	825	31,031	350	56,983	4,025	15,921	1,275	1,032	700	15,589	1,125
1896..	868	275	1,010	850	37,959	575	58,082	4,750	16,227	1,500	1,206	825	16,969	1,325

(*a*) From *Statistisches Jahrbuch für das Deutsche Reich*, 1897. (*b*) Previous to 1896 includes copper scrap. (*c*) Previous to 1896 includes alum ore. The following table of the imports and exports in 1897, based on data published in *Chemiker Zeitung*, is given separately as unofficial.

MINERAL IMPORTS AND EXPORTS OF GERMANY FOR THE YEAR 1897. (IN METRIC TONS.)

Substances.	Imports.	Exports.
Alum, and aluminate of sodium and alumina, including hydrate.	207	22,434
Aluminum	942	38
Ammonium carbonate	1,549	2,643
Ammonium sulphate	33,113	2,628
Ammoniacal liquor	8,237	12,969
Antimony	1,537	67
Antimony and arsenic ore	818	332
Arsenic	0.1	87
Arsenic, white	337	1,839
Arsenical compounds	8	547
Asbestos and asbestic mastic	3,380	295
Asphalt, pitch, and wood cement	39,438	24,235
Barium chloride	1,894	3,815
Barium salts, N. E. S	58	919
Baryta-white	6	1,814
Barytes	1,977	40,882
Borax and boracic acid	2,512	2,066
Brass and tombac	1,628	4,214
Bromide of potash and other bromine preparations	5	331
Bromine	0.2	97
Calcium chloride	56	890
Carbon bisulphide	200	113
Carbonic acid	42	2,478
Cement	42,364	424,557
Chloride of lime	182	13,638
Chloride of magnesium	24	13,230
Chrome alum	0.4	1,002
Chrome ore	16,941	18
Coal	6,072,029	12,889,907
Coal-tar oil, light	10,185	1,271
Coal-tar oil, heavy	2,486	3,864
Cobalt and nickel ore	9,726	32
Coke	485,161	2,161,886
Copper, crude	67,578	7,182
Copper, in bars and sheets	133	1,745
Copper alloys, in bars, sheets, etc.	267	3,967
Cinnabar	15	250
Cryolite and bauxite	19,184	219
Explosives	33	3,632
Fluorspar	97	10,423
Gold, silver, and platinum ores	8,927	30
Gold preparations and salts	0.2	4.9
Graphite, amorphous	17,366	2,422
Gunpowder	8	2,403
Gypsum	7,972	25,935
Iodine	164	25
Iron, crude, all kinds	423,127	90,885
Iron, wrought, in bars	29,467	246,772
Iron alum and iron mordant	1,142	665
Iron ores	3,185,644	3,230,391
Iron oxide, red	2,284	951
Kaolin, feldspar, and refractory clay	207,155	121,545
Lead and copper ores	90,114	26,817
Lead	35,092	24,075

Substances.	Imports.	Exports
Lead, white	696	14.786
Lignite	8,111,076	19,112
Litharge	637	3,973
Magnesium, artificial carbonate	24	91
Magnesium, natural carbonate	5,785	1.516
Manganese ore	86,911	8,615
Manganese preparations	5	747
Mineral oil for use in the arts	3,105	....
Muriatic acid	2,961	13,134
Nickel	1,390	169
Nitric acid	3,113	26.439
Ozokerite, crude	3,238	1,073
Ozokerite, refined	163	1,905
Petroleum, crude	15,144	2
Petroleum, distilled	5,292	66
Petroleum, refined	874,175	38
Phosphorus	260	72
Pitch, except asphalt	48,248	7,099
Potash, all kinds	1,734	13,100
Potash, caustic	162	5,568
Potassium chlorate	715	80,391
Potassium chloride and sodium chloride	715	80,391
Potassium chromate	512	782
Potassium cyanide	7	1,086
Potassium iodide and other iodine preparations	17	194
Potassium sulphate	912	20,971
Quicksilver	643	111
Salt	21,982	213,859
Saltpeter, Chile	465,493	11,364
Saltpeter, potassium	2,889	8,986
Soda, calcined	916	45,672
Soda, caustic	905	4,785
Soda, crude and crystallized	106	1,786
Soda chromate	254	1,881
Soda, double carbonate	320	678
Sodium sulphide	7,631	29,161
Stone, refractory, from clay	36,097	94,180
Strontia	7,734	961
Strontia preparations	1,468	85
Sulphur	25,305	489
Sulphate of potassium and sulphate of sodium	215	1,294
Superphosphate	110,782	62.700
Thomas slag, ground	110,216	169.336
Tin	12,395	861
Tin salts	118	297
Ultramarine	57	3,976
Vitriol, all kinds	2,328	7,170
Waterglass	134	4,798
Witherite	4,141	539
Zinc, ingot	19,734	51,362
Zinc ores	24,735	30.047
Zinc, sheet	130	17,461
Zinc white, zinc gray, and zinc sulphide	3,532	17,631

MINERAL PRODUCTION OF BADEN. (*a*) (IN METRIC TONS AND DOLLARS; 4 marks — $1.)

Year.	Coal.		Glauber Salt.		Gypsum.		Iron.					
							Ore.		Cast, Second Fusion.		Ingot.	
1892	4,500	$1,300	(*b*)	....	22,130	$14,729	10	$116	24,911	$1,138,148	8	$1,062
1893	3,200	9,200	3,718	$13,941	28,905	16,217	(*b*)	....	24,940	1,167,990	189	23,562
1894	3,768	10,728	3,975	9,937	40,652	21,407	(*b*)	....	31,195	1,502,847	2,391	89,252
1895	4,189	12,657	(*b*)	....	29,805	19,504	(*b*)	....	31,356	1,400,720	4,126	158,077
1896	4,001	11,003	(*b*)	....	32,801	24,651	(*b*)	....	36,235	1,730,776	3,418	143,371

Year.	Iron—*Continued* Wrought.		Lead and Copper Ores.		Limestone. (*d*)		Manganese Ore.		Quartzsand.		Refractory Earths.	
1892........	2,733	$123,202	6.0	....	4,441	$1,181	6	$15	3,027	$1,609	8,189	$7,760
1893........	644	33,876	5.0	$454	4,170	1,122	5	13	1,924	1,048	8,475	6,647
1894........	1,265	58,539	*c*2.0	415	107,139	16,218	(*b*)	....	2,211	1,382	8,772	8,346
1895........	1,047	50,238	*c*2.5	105	40,188	6,332	(*b*)	....	3,319	1,901	7,453	4,130
1896........	1,118	51,954	(*b*)	103	116,913	16,496	130	325	1,193	602	6,819	4,267

Year.	Salt, Common.		Sandstone. (*e*)		Sulphate of Alumina.		Sulphuric Acid.		Tripoli.		Zinc Ore.	
1892........	29,464	$208,984	5	$125	3,476	$82,564	12,332	$123,316	10.0	$1,005	1,530	$6,120
1893........	28,473	211,486	8	200	1,498	33,705	12,573	94,926	8.0	763	484	1,451
1894........	27,867	211,226	1,592	1,775	1,863	31,671	11,955	76,203	12.0	976	723	1,446
1895........	28,188	214,031	443	1,000	2,136	31,779	11,944	65,692	8.5	650	21	198
1896........	29,227	191,252	(*b*)	....	1,824	27,188	14,226	78,243	9.0	1,125	(*b*)	....

(*a*) Compiled for THE MINERAL INDUSTRY by the *Grossherzogliche Badische Domänendirektion*, Carlsruhe. (*b*) Not reported. (*c*) Lead ore only. (*d*) Including cement stone and bituminous slate. (*e*) Including millstones.

MINERAL PRODUCTION OF BAVARIA. (*a*) (IN METRIC TONS; 4 marks = $1.)

Year.	Barytes.		Building Stone.		Cement.		Coal.		Lignite.	
1892..	4,765	$9,543	582,784	$883,062	87,571	$78,798	718,052	$1,815,415	13,367	$15,662
1893..	2,607	3,973	568,410	837,190	79,779	80,336	802,537	2,000,357	17,167	14,518
1894..	4,550	5,425	627,116	844,769	81,723	83,426	806,389	1,972,941	20,687	17,079
1895..	3,587	4,388	612,969	854,209	85,089	85,864	903,340	2,147,045	26,531	23,304
1896..	3,397	3,404	658,581	856,753	94,481	99,929	900,080	2,129,069	35,934	33,581

Year.	Copper Ore.		Emery.		Feldspar.		Fireclay.		Flagstones.		Fluorspar.		Graphite.	
1892..	1,831	$7,706	170	$1,710	1,200	$2,400	108,312	$237,056	19,588	$79,931	4,594	$5,907	4,036	$63,240
1893..	650	2,762	172	1,498	1,200	2,400	110,970	217,859	26,873	110,493	3,988	4,478	3,140	52,010
1894..	(*b*)	....	148	1,583	1,720	3,540	121,950	219,154	18,083	77,932	3,616	6,015	3,183	45,732
1895..	(*b*)	....	229	2,353	1,115	3,075	106,925	180,188	18,909	84,635	3,940	5,986	3,751	50,612
1896..	(*b*)	....	249	2,527	1,315	3,145	110,174	251,899	20,559	86,620	5,218	8,280	5,248	72,108

Year.	Gypsum.		Iron Ore.		Iron Pyrites.		Kaolin. (China Clay.)		Limestone.		Lithographic Stone.		Manganese Ore.	
1892..	24,517	$12,765	146,392	$149,005	1,945	$4,862	18,085	$17,232	233,417	$64,716	8,650	$216,262	137	$275
1893..	25,540	13,275	149,271	147,110	2,108	5,269	17,835	22,117	283,488	76,374	8,885	234,637	180	440
1894..	25,267	13,219	138,977	140,944	1,928	4,748	15,944	22,121	229,784	60,943	9,286	185,730	80	270
1895..	21,773	11,597	145,191	148,282	1,955	14,616	13,250	19,042	271,196	69,596	8,788	175,770	150	113
1896..	28,799	15,334	161,279	164,262	1,997	14,930	19,060	26,368	238,434	74,962	10,868	163,020	70	35

Year.	Ocher and Mineral Paints.		Quartz-sand.		Salt, Rock.		Sandstone.		Slate.		Soapstone.		Whetstone.	
1892..	8,877	$20,773	32,381	$10,963	955	$6,115	246,193	$319,562	1,463	$13,005	1,271	$20,344	148	$2,802
1893..	10,317	31,168	30,400	10,053	1,214	7,564	238,405	314,290	1,485	12,886	1,911	29,376	57	1,300
1894..	9,195	22,721	29,775	9,632	630	4,122	221,642	291,924	1,146	10,562	1,900	22,918	66	1,456
1895..	8,579	25,945	33,457	10,513	1,321	8,443	210,450	281,893	1,278	11,766	2,421	37,979	215	9,000
1896..	8,667	26,496	29,868	8,441	708	4,572	235,518	321,591	1,565	14,252	3,051	52,458	88	3,740

Year.	Iron, Bar.		Iron, Cast, 1st Fusion.		Iron, Cast, 2d Fusion.		Iron, Pig.		Iron, Sheet.		Iron, Wire.	
1892..	64,646	$2,020,865	334	$12,521	48,212	$2,249,683	77,598	$898,302	592	$22,349	1,008	$28,036
1893..	49,908	1,488,411	206	6,960	49,614	2,307,051	75,209	856,182	1,482	57,766	308	8,211
1894..	46,860	1,351,169	196	6,606	53,342	2,490,670	75,669	865,543	268	10,087	279	7,426
1895..	48,596	1,368,013	293	9,898	62,131	2,868,070	77,114	884,615	150	5,250	100	2,551
1896..	53,573	1,587,338	114	3,993	71,006	3,378,247	79,621	907,306	(*b*)	....	243	6,282

Year.	Steel.		Salt.		Sulphate of Soda.		Other Sulphates, Including Alum.		Sulphuric Acid.	
1892	70,790	$1,887,678	41,352	$414,192	516	$4,617	612	$29,598	6,566	$62,192
1893	60,824	1,645,074	42,154	459,596	1,230	6,975	628	29,623	7,355	64,692
1894	86,594	2,022,824	42,183	459,146	568	3,250	668	34,526	6,979	59,693
1895	96,829	2,336,689	41,106	446,628	494	2,875	637	34,170	6,515	52,800
1896	101,954	2,497,814	40,400	438,379	663	3,067	601	32,209	7,064	61,214

(*a*) From the *Uebersicht der Production des Bergwerks-, Hütten-, und Salinen-Betriebes in dem Bayerischen Staate.* (*b*) Not reported.

MINERAL PRODUCTION OF PRUSSIA. (*a*) (IN METRIC TONS; 4 marks = $1.)

Year.	Alum Shale		Antimony Ore.		Arsenic Ore		Asphalt.		Boracite.		Coal.		Lignite.	
1892..	2,460	$1,087	(*b*)	......	1,202	$12,229	12,665	$35,956	168	$12,953	65,442,558	$117,677,458	17,219,033	$11,913,033
1893..	302	418	15	$75	1,684	16,359	11,290	34,730	139	10,587	67,657,844	110,084,144	17,553,482	11,113,291
1894..	126	189	(*b*)	......	2,222	22,220	14,108	44,537	164	10,490	70,643,979	113,518,107	17,791,062	10,512,840
1895..	125	188	24	218	3,046	30,460	14,391	44,659	140	8,256	72,621,509	119,888,605	20,114,877	11,527,852
1896..	154	231	(*b*)	......	3,247	41,196	16,204	43,715	171	9,896	78,993,655	132,782,104	21,981,201	12,195,391

Year.	Cobalt Ore.		Copper Ore.		Epsom Salt.		Iron Ore.		Iron Pyrites.		Kainite.	
1892..	534	$14,550	557,172	$5,073,704	8,518	$18,423	4,081,306	$6,388,537	104,346	$184,851	448,095	$1,562,839
1893..	203	8,492	573,721	4,471,014	7,721	14,656	4,007,898	6,086,567	110,072	192,987	531,560	1,904,822
1894..	203	5,741	579,132	4,012,585	7,734	16,833	4,012,446	6,141,224	123,149	215,597	529,169	1,814,585
1895..	120	6,208	623,420	3,799,452	6,789	13,701	3,726,725	5,700,009	115,051	201,660	513,097	1,804,950
1896..	181	9,868	707,395	4,186,321	1,793	3,971	4,053,109	7,101,832	117,545	203,745	616,462	2,424,132

Year.	Other Potash Salts.		Lead Ore.		Manganese Ore		Nickel Ore.		Petroleum.		Quicksilver Ore.		Salt, Rock.	
1892..	501,748	$1,489,801	141,660	$3,462,955	31,888	$106,087	529	$4,500	1,585	$41,925	*Nil.*	......	245,551	$253,628
1893..	596,063	1,744,353	148,442	3,364,366	39,132	97,830	652	8,095	1,365	36,592	1.2	$25	260,727	280,259
1894..	625,662	1,897,079	144,724	2,900,092	42,526	98,950	1,341	13,413	1,600	39,791	*Nil.*	......	305,810	329,326
1895..	558,846	1,707,929	140,991	2,911,948	39,882	105,916	2,058	4,190	1,612	46,446	*Nil.*	......	278,326	327,861
1896..	587,306	1,786,786	138,398	2,998,488	48,614	102,384	738	4,540	1,512	46,867	*Nil.*	......	305,227	346,952

MINERAL PRODUCTION—*Cont.*

Year.	Silver and Gold Ore.		Zinc Ore.	
1892..	4	$11,498	797,698	$5,294,549
1893..	12	18,665	787,048	3,570,105
1894..	6	9,281	727,645	2,567,053
1895..	12	23,626	706,179	2,643,282
1896..	15	18,748	729,725	4,254,351

METALLURGICAL PRODUCTION OF PRUSSIA. (*a*)

Year.	Antimony and Alloys.		Arsenic Products.		Bismuth.		Cadmium. Kg.		Cobalt Works' Products.	
1892..	210	$23,106	592	$27,740	(*b*)	......	3,200	$2,850	54	$239,909
1893..	362	39,898	710	31,939	0.048	$174	5,284	5,461	44	190,315
1894..	376	40,034	1,147	57,377	3.092	7,117	6,052	6,335	46	142,675
1895..	924	73,660	1,788	98,363	1.000	1,750	7,047	9,809	45	144,103
1896..	1,239	113,886	1,750	130,589	(*b*)	......	10,667	20,435	69	220,694

Year.	Copper Matte		Copper.		Gold—Kg.		Iron.		Lead.		Litharge.	
1892..	625	$24,630	21,559	$5,383,722	115.82	$81,067	3,489,081	$42,515,551	87,988	$4,607,369	2,634	$153,148
1893..	831	65,666	20.707	5,045,292	739.09	513,707	3,539,702	41,118,869	85,866	4,166,992	2,548	139,304
1894..	670	26,228	21,966	4,670,025	687.88	479,215	3,744,116	43,048,291	92,379	4,357,085	2,647	141,079
1895..	766	48,548	22,069	4,080,829	653.15	455,159	3,778,775	43,961,347	99,586	4,983,733	2,458	137,408
1896..	369	27,098	25,683	6,398,780	755.19	524,958	4,470,551	55,144,390	102,418	5,621,335	2,544	153,432

Year.	Manganese and Alloys.		Nickel. (*c*)		Paint, Mineral.		Salt, Common.		Silver—Kg.		Sulphur.		Sulphuric Acid.	
1892..	39	$21,825	747	$747,812	2,082	$40,320	264,896	$1,695,904	301,374	$8,786,415	1,850	$49,828	360,156	$2,732,789
1893..	45	24,588	893	828,750	2,415	55,171	266,478	1,707,265	276,645	7,274,252	1,871	47,659	387,306	2,977,760
1894..	48	25,210	522	480,675	2,250	39,375	280,511	1,777,592	279,781	6,102,001	1,888	42,912	420,965	3,098,586
1895..	66	34,300	698	616,143	2,059	38,863	278,962	1,757,837	245,527	5,376,046	1,819	34,085	416,239	3,394,871
1896..	86	42,225	822	713,455	3,110	43,750	288,300	1,848,166	288,467	6,534,058	2,011	41,041	456,781	2,934,098

Year.	Sulphates.										Tin.		Zinc.	
	Copper.		Iron.		Nickel.		Zinc.		Mixed.					
1892..	1,338	$95,056	7,778	$41,692	44	$14,000	2,748	$40,886	167	$5,506	644	$290,720	139,725	$13,743,287
1893..	1,873	135,231	7,134	30,765	37	11.237	2,704	37,111	187	6,296	909	320,790	142,773	11,806,066
1894..	1,858	137,956	7,600	27,788	46	13,975	2,746	38,914	148	4,818	842	252,600	148,354	10,435,118
1895..	1,922	138,905	8,627	30,185	91	24,325	2,641	39,266	112	3,596	849	254,592	150,123	10,397,219
1896..	2,568	196,592	8,618	29,383	128	31,360	3,102	46,723	126	4,266	437	128,828	153,082	11,775,566

(*a*) From *Zeitschrift für das Berg-, Hütten-, und Salinenwesen.* (*b*) Not reported. (*c*) In 1892, also nickel speiss, 21 metric tons, $57,221, and in 1893, 3 metric tons, $1587.

MINERAL PRODUCTION OF SAXONY. (*a*) (IN METRIC TONS AND DOLLARS; 4 marks = $1.)

Year.	Arsenical, Sulphur, and Copper Pyrites.		Barytes.		Bismuth, and Bismuth, Cobalt, and Nickel Ores.		Coal. (Not Including Lignite.)		Feldspar.		Galena.	
1892....	8,704.0	$26,606	354.3	$852	476.3	$179,561	4,212,875	$9,939,670	2,350	$4,406	3,043.0	$174,247
1893....	12,617.7	31,521	488.9	1,223	3,634.8	174,917	4,274,064	10,128,936	2,425	4,547	2,917.8	156,019
1894....	13,045.2	33,491	291.3	815	2,980.4	175,518	4,128,227	9,435,934	1,880	3,525	3,412.6	175,745
1895....	8,900.3	26,573	284.5	1,045	3,001.1	158,056	4,435,328	10,224,100	995	1,866	3,346.7	172,617
1896....	8,834.9	27,080	574.2	1,554	3,168.7	141,785	4,536,603	10,778,005	805	1,509	2,844.5	155,848

Year.	Iron Ocher, Swabian and Colored Earths		Ironstone.		Lignite.		Limestone and Various Products. (*b*)		Manganese Ore.		Quartz, Mica, and Uranium Ore.	
1892....	122.8	$928	12,895.5	$23,945	927,860	$674,682	(*j*)	$5,044	1,537.7	$3,700	384.6	$3,323
1893....	113.4	1,021	1,650.7	2,972	940,968	663,831	(*j*)	5,994	2.6	31	408.4	3,208
1894....	213.9	776	1,048.0	1,833	918,589	641,836	379.9	5,917	15.0	187	735.0	2,653
1895....	415.0	628	20.2	107	1,018,486	670,274	(*j*)	6,051	8.4	105	26.5	501
1896....	333.4	1,054	3,499.4	4,314	1,085,825	666,590	10.0	6,967	10.4	130	20.1	327

Year.	Silver Ores. (*c*)		Tin and Tinstone		Wolfram.		Zinc-Blende.		Specimens	Totals.	
1892....	17,651.0	$821,083	48.7	$18,705	37.5	$8,108	332.2	$3,198	$702	5,189,273.1	$11,888,706
1893 ...	15,657.5	681,743	44.2	18,908	42.3	7,866	374.2	1,200	1,401	5,255,429.1	11,885,340
1894....	14,628.2	499,778	211.4	23,697	38.7	5,747	155.1	621	512	5,080,845.7	11,008,582
1895....	14,431.6	493,431	154.4	14,942	29.1	4,289	134.6	567	775	5,485,561.4	11,770,917
1896....	13,315.3	455,183	88.2	8,555	40.8	7,149	72.2	373	706	5,606,044.5	12,257,580

Year.	Manufactured Products.							
	From a Part of the Coal.				From a Part of the Lignite.			
	Briquettes—M.		Coke.		Briquettes—M.		Lignite Bricks—M.	
1892............	1,338	$6,587	82,256	$338,556	63,772	$45,477	62,376	$110,366
1893............	1,478	6,981	73,829	290,677	31,210	19,801	64,698	115,687
1894............	1,166	5,711	66,742	237,555	64,500	40,590	61,084	107,466
1895............	1,412	6,917	70,449	252,420	99,228	68,245	65,353	115,255
1896............	1,981	7,997	77,086	299,248	123,571	81,983	58,374	104,506

METALLIC CONTENTS OF THE MIXED ORES INCLUDED IN THE PRECEDING TABLE WHICH WERE DELIVERED TO THE FISCAL SMELTING WORKS AT FREIBERG. (*a*) (IN METRIC TONS; 4 marks = $1.)

Year.	Total Mixed Ores.		Arsenic. Tons.	Bismuth. Kg.	Copper. Tons.	Gold. Kg.	Lead. Tons.	Nickel and Cobalt. Kg.	Silver. Kg.	Sulphur. Tons.	Zinc. Tons.
1892....	30,015.0	$1,023,215	415.0	25.9	13.5	0.0496	4,163.2	553.0	34,908.3	4,207.8	338.0
1893....	31,335.6	869,041	406.6	(*j*)	20.1	(*j*)	4,361.9	655.5	33,253.7	4,841.6	188.6
1894....	31,099.1	709,397	424.7	(*j*)	20.8	(*j*)	4,619.5	558.0	31,635.6	5,354.2	134.9
1895....	26,679.5	694,131	350.1	(*j*)	14.9	0.1314	4,739.8	60.3	29,383.3	3,905.0	81.9
1896....	24,923.3	638,237	308.2	(*j*)	20.0	0.1786	3,887.5	130.1	26,268.0	3,784.9	122.6

PRODUCTS SOLD BY THE FISCAL SMELTING WORKS AT FREIBERG AND THE COBALT WORKS AT SCHNEEBERG, GERMANY. (*a*) (IN METRIC TONS AND DOLLARS; 4 marks = $1.)

Year.	Arsenical Products. (*d*)		Bismuth. Kg.		Cobalt Products.		Copper Sulphate.		Fine Gold. Kg.		Lead.			
											Products. (*e*)		Sheet.	
1892....	1,075	$81,887	1,961	$8,022	407	$684,726	1,975	$134,436	778	$542,335	6,054	$341,419	565	$34,522
1893....	1,084	87,648	2,101	8,446	445	639,878	2,024	154,222	954	664,853	5,456	291,292	643	35,444
1894....	1,229	109,118	2,402	9,725	404	442,737	2,140	164,553	957	667,141	4,608	286,044	1,160	63,414
1895....	1,217	108,846	2,529	4,738	406	353,768	1,883	187,557	850	592,497	6,608	345,129	592	32,622
1896....	882	90,626	1,112	1,765	599	431,818	2,547	197,421	847	590,227	5,810	333,744	830	50,953

Year.	Lead—*Continued.*				Nickel, Speiss.		Fine Silver—Kg.		Sulphuric Acid. (*g*)		Other Chemicals. (*h*)	
	Shot.		Other Manufactures of. (*f*)									
1892....	187	$12,891	356	$22,834	49	$4,850	94,880	$2,775,689	10,860	$127,920	982	$9,584
1893....	194	12,809	454	26,830	54	3,575	95,103	2,467,555	14,409	144,368	690	7,321
1894....	161	10,055	198	11,981	75	3,656	81,828	1,745,831	12,679	132,171	699	6,995
1895....	288	14,618	218	18,568	26	1,052	54,770	1,211,118	10,205	118,419	624	6,744
1896....	149	10,001	218	14,874	83	7,195	46,577	1,068,337	9,288	97,812	499	5,768

Year.	Zinc and Zinc Dust.		Clay and Chamotte Manufactures. (*i*)	Total Value.
1892....	212	$22,008	$12,998	$4,815,112
1893....	188	15,864	12,634	4,571,743
1894....	222	18,056	13,507	3,634,962
1895....	168	11,886	11,729	2,959,268
1896....	16	1,347	12,598	2,909,008

(*a*) From *Jahrbücher für das Berg- und Hüttenwesen im Königreiche Sachsen.* (*b*) Including arsenic powder, slags, washing-sand, granular ore, refuse stones, and chippings. (*c*) Including silver-bearing lead, copper, arsenic, zinc, and sulphur ores. (*d*) Including arsenious acid, red, yellow, and white glass, and metallic arsenic. (*e*) Including assay lead, soft lead, antimonial lead, litharge, lead fume, and tin-lead. (*f*) Including lead pipes, lead wire, and various lead apparatus. (*g*) Including sulphuric acid of all kinds. (*h*) Including copperas and glauber salt. (*i*) Including tiles, plates, figured stone, muffles, clay and graphite crucibles, and assaying utensils. (*j*) Not reported.

GREECE.

The statistics of mineral production in Greece and the imports and exports are summarized in the following tables:

MINERAL PRODUCTION OF GREECE. (*a*) (METRIC TONS AND DOLLARS; 1 drachma—20 cents.)

Year.	Blende.		Calamine, Calcined.		Chrome Ore.		Emery.		Gypsum.		Iron Ore.		Iron Ore, Manganiferous.	
1892..	2,595	(*b*)	23,300	$624,160	1,470	$17,934	1,479	$19,227	100	$1,800	244,408	(*b*)	157,756	$871,190
1893..	2,727	$47,480	19,862	385.300	1,820	20,800	2,449	31,837	133	2,180	67,670	$81,200	121,352	281,540
1894..	1,030	16,700	19,800	348.480	6.000	72,000	3,570	46,410	85	1.540	149,623	157,000	76,277	(*b*)
1895..	2,710	45.230	21,321	396,250	2,740	34,120	3,055	45,825	113	2,030	150,210	179,250	152,123	342,670
1896..	1,750	31,520	20,950	301,680	1,600	22,400	3,650	77,745	120	2,150	225,600	314,700	166,850	417,120
1897..	3,118	58,826	22,817	489,357	563	8,087	3,024	64,411	51	918	260,828	375,592	182,850	499,180

Year.	Lead, Soft.		Lead Ore, Argentiferous.		Lead, Argentiferous.		Lead Fume.		Lignite.		Magnesite, Crude.	
1892..	(*b*)	(*b*)	3,550	(*b*)	14,426	(*b*)	1,129	$9,800	6,550	(*b*)	10,100	$28,400
1893..	(*b*)	(*b*)	4,625	$97,122	14,534	$1,156,900	1,918	17,800	12,134	$24,268	8,815	24,680
1894..	479	$24,910	*c*4,876	117,726	18,955	1,073,500	1,680	13,700	122,117	181,471	18,262	59.340
1895..	7	490	1,580	147,400	19,838	1,656,500	1,406	12,020	17,748	55,500	11,096	33,288
1896 .	480	28,900	3,200	137,600	14,700	1,325,095	1,550	10,510	14,000	28,000	11,600	34,800
1897..	520	33,904	2,815	125,174	15,946	1,524,977	2,785	26,333	20,018	40,000	11,311	39,500

Year.	Magnesite, Bricks.		Magnesite, Calcined.		Manganese Ore.		Millstones. Number.		Puzzolan.		Sea Salt.		Sulphur.	
1892..	......	....	......	....	11,716	$84,120	10,290	$5,200	10,809	(*b*)	21,600	$345,600	1,525	(*b*)
1893..	1,275	$25,500	......	....	5,250	36,760	(*b*)	8,000	32,348	$29,100	18,329	293,264	2,400	$67,380
1894..	873	17,460	602	$6,020	50,578	133,954	11,448	5,535	28,550	25,700	21.310	332,436	1,946	(*b*)
1895..	......	....	......	....	7,250	42,750	(*b*)	10.020	29,810	26,830	22,238	335,800	1,480	31.970
1896..	......	....	......	....	15,500	93,600	(*b*)	8,200	31.300	30,100	22,800	344,280	1,540	35.500
1897..	896	18,172	686	7,550	11,868	73,580	6,975	3,785	42,600	38,340	20,421	308,357	358	7,518

(*a*) The figures for 1892 are from *L'Industrie Minerale en Grèce Rapport Pour L'Exposition de Chicago;* those for 1894 were furnished by the Bureau of Mines, Athens, for the *Second General Report of the Mineral Industry in the United Kingdom;* those for 1893, 1895, 1896, and 1897 were communicated to THE MINERAL INDUSTRY by E. Grohmann, Seriphos. The irregularity of certain of the figures for 1894 as compared with the preceding and following years indicates that they were reckoned in an entirely different manner, especially the figures for manganiferous iron ore, manganese ore, and lignite. (*b*) Not stated in the original sources. (*c*) In addition, 14,939 tons of undressed lead ore were reported.

MINERAL IMPORTS OF GREECE. (*a*) (IN METRIC TONS AND DOLLARS.)

(1 okâ = .00128 metric tons; 5 drachmas = $1.)

Year.	Acids.		Alum and Chalk.		Bricks of Cement, Glazed.		Bronze.			
							Bars and Sheets.		Manufactures.	
1891........	260.5	$85,865	253.9	$7,988	(*b*)	....	18.0	$5,636	18.1	$45.102
1892........	838.5	58,330	256.6	8,019	(*b*)	....	16.0	5,033	57.5	63.500
1893........	189.8	43,079	221.9	6,954	23.2	$3,080	13.6	4,260	37.0	39.027
1894........	252.6	41,657	222.7	6,958	42.9	5,696	10.0	3,120	37.3	40,857
1895........	385.7	49,346	208.3	6,509	24.5	3,260	9.7	3,026	50.8	61,243

Year.	Copper.						Fire-Brick.		Glass.			
	Ore and Alloys.		Plates, Alloyed		Manufactures.				Broken and in Bulk.		Manufactures.	
1891	253.7	$91,162	12.6	$3,548	23.1	$11,736	(b)	....	91.3	$2,139	1,703.9	$199,023
1892	242.5	87,155	12.7	2,978	13.1	6,633	(b)	....	52.8	1,328	1,892.3	199,516
1893	171.1	61,495	13.4	3,152	62.4	33,126	68.7	$10,195	186.3	4,366	1,040.1	119,562
1894	234.1	84,117	21.3	5,015	24.9	14,936	67.6	10,031	189.8	4,448	1,317.1	141,287
1895	158.1	56,818	5.7	1,334	18.3	30,093	132.3	19,645	84.9	1,991	1,304.5	142,975

Year.	Gold Ore and Gold in Alloys. Kg.		Gold and Platinum Manufactures.		Gypsum.		Iron.					
							Cast, Crude.		Bars, Sheets, etc.		Manufactures.	
1891	(b)	....	22.2	$57,136	28.1	$879	599.4	$5,620	7,469.2	$256,754	4,548.7	$689,797
1892	(b)	....	13.4	35,389	26.8	839	1,732.6	16,243	5,168.9	177,681	2,027.6	542,053
1893	(b)	....	11.8	30,347	10.3	324	1,330.7	12,475	5,606.2	192,714	2,270.0	365,561
1894	11.52	$7,517	6.3	16,118	16.9	528	1,431.2	13,418	5,536.9	186,333	2,694.4	426,834
1895	(b)	....	6.1	15,757	16.5	516	1,363.7	12,786	4,204.4	144,527	2,801.2	444,539

Year.	Lead Ore and Lead in Alloys.		Marble Slabs and Manufactures.		Metal and Alloys, Manufactured. (c)		Mineral Oils. (c)		Ochers.		Petroleum. Barrels.	
1891	96.1	$6,008	62.5	$7,315	8.2	$39,156	1.2	$484	105.3	$2,468	180,633	$186,839
1892	32.8	2,048	53.8	5,067	2.8	35,392	21.2	8,277	68.1	1,595	198,168	157,359
1893	45.8	2,863	22.3	3,683	2.6	33,040	142.3	55,601	53.7	1,258	131,192	110,715
1894	36.4	2,274	31.6	3,354	4.6	45,088	24.4	9,523	67.2	1,515	166,197	159,537
1895	30.3	1,912	39.5	1,032	4.9	61,276	45.5	17,764	67.7	1,575	225,000	225,000

Year.	Porcelain, Manufactures.		Potash, Soda, and Caustic Soda.		Pottery, Artistic. Kg.		Puzzuolana Cement, Hydraulic Lime, and Venetian and Marseilles Earth.		Railway Bars and Girders (Iron).	
1891	646.9	$86,412	4,155.6	$206,118	691	$3,024	2,552.0	$19,975	946.6	$44,372
1892	521.8	67,282	2,168.1	189,011	452	1,977	7,675.7	23,986	1,510.7	62,129
1893	407.6	63,052	2,184.5	191,145	363	1,590	2,373.0	7,416	389.0	18,235
1894	474.1	74,246	2,686.0	235,162	298	1,305	1,240.8	3,878	577.6	27,076
1895	557.2	64,801	2,441.4	218,822	392	1,714	903.0	2,222	259.6	12,167

Year.	Silver.				Slate, Manufactures.		Steel.					
	Ore and Alloys—Kg.		Manufactures. Kg.				Railway Bars and Frogs.		Bars and Sheets.		Manufactures.	
1891	(b)	....	2,597.1	$15,350	27.2	$4,667	170.2	$21,271	239.8	$52,452	128.2	$26,348
1892	102	$2,440	1,955.4	10,565	29.0	4,976	267.2	33,396	128.4	28,886	109.1	21,976
1893	(b)	....	1,018.7	6,019	6.3	1,079	271.6	33,945	278.0	79,038	39.3	10,439
1894	(b)	....	422.8	2,497	14.2	2,444	353.1	44,134	275.7	79,185	44.5	12,721
1895	(b)	....	1,927.0	11,519	16.8	2,833	51.6	6,446	458.1	100,201	39.9	14,753

Year.	Stone, Paving.		Sulphates of Iron and Copper.		Talc.		Telegraph Wire, Iron and Steel.		Terra Cotta, Manufactures.		Tile, Brick, and Pipes, Unglazed.	
1891	....	....	234.4	$10,988	6.1	$1,912	759.5	$296,679	922.4	$27,655	573.6	$3,585
1892	122.2	$6,684	376.8	17,662	97.3	30,425	665.0	253,766	2,210.5	33,824	3,199.2	23,995
1893	78.4	4,288	258.5	12,118	0.2	72	360.6	140,873	365.3	12,420	339.6	2,388
1894	72.4	3,959	117.6	5,510	2.7	881	507.5	248,244	374.7	13,613	268.9	1,680
1895	73.0	3,793	92.7	4,343	1.2	389	727.0	283,767	314.1	11,446	109.3	523

Year.	Tin.				Whetstone, Crude Stone, Coal, Chalk, Sulphur & Various Other Substances.		Zinc.					
	Ore and Alloys		Manufactures.				Ore and Alloys		Sheets.		Manufactures.	
1891	55.3	$25,937	104.1	$15,643	255,576	$1,996,683	99.0	$7,735	6.6	$516	13.4	$8,351
1892	65.6	30,766	8.6	7,044	222,385	1,737,385	87.0	6,800	24.1	1,487	7.4	6,429
1893	64.7	30,338	11.3	8,545	191,543	1,496,429	83.7	6,537	23.8	1,858	5.0	2,730
1894	81.6	38,244	13.0	9,516	195,588	1,528,028	97.3	7,604	20.0	1,564	3.0	1,784
1895	54.2	24,817	13.7	12,722	198,118	1,547,780	95.8	7,543	62.9	4,912	11.4	7,687

(a) From the *Emporion tês Hellados*, Athens, 1896. (b) Not reported. (c) Not elsewhere stated.

MINERAL EXPORTS OF GREECE. (*a*) (IN METRIC TONS AND DOLLARS.)

(1 okâ = .00128 metric tons; 5 drachmas = $1.)

Year.	Galena.		Glassware.		Gold Coin.	Grindstones and Millstones.	Iron, Manganiferous.		Lead, Argentiferous.		Machinery
1891........	3,946	$356,718	64	$9	$521,072	(*b*)	78,733	$251,946	14,528	$1,586,458	$9,180
1892........	2,645	243,108	2,563	383	574,838	$6,069	161,706	517,747	16,512	1,808,110	7,868
1893........	4,175	377,420	230	86	663,512	1,347	109,869	351,581	15,430	1,684,956	17,496
1894........	4,868	450,192	5,696	825	734,138	(*b*)	167,750	536,800	15,432	1,685,174	188
1895........	3,629	328,062	256	95	513,740	10,073	193,284	618,509	16,692	1,846,776	3,410

Year.	Marble.				Naphtha, Crude. Kg.		Other Ores and Metals, Crude and Worked.	Pottery.		Silver Coin.
	Crude—Cubic Meters.		Cut—Cubic Meters.							
1891........	220	$5,720	12	$600	35,858	$5,042	$17,698	27.1	$2,120	$2,542
1892........	40	1,040	5	250	22,685	3,190	28,878	(*b*)	....	16,013
1893........	30	780	10	500	5,120	720	56,755	12.8	1,003	8,163
1894........	128	3,328	(*b*)	....	576	81	163,290	122.7	9,589	1,472
1895........	833	21,658	(*b*)	....	1,362	1,872	141,457	36.3	2,835	2,720

(*a*) From the *Emporion tês Hellados*, Athens, 1896. (*b*) Not reported.

ITALY.

THE official statistics of mineral and metal production in Italy, together with the imports and exports as reported in the official statistics of the Kingdom, are summarized in the following tables:

MINERAL PRODUCTION OF ITALY. (*a*) (IN METRIC TONS AND DOLLARS; 5 lire — $1.)

Year.	Alum.		Alunite.		Antimony Ore.		Asphaltum.		Boracic Acid, Crude.		Copper Ore.		Gold Ore.		Graphite.	
1891	1,029	$20,060	4,000	$3,840	782	$64,644	28,180	$135.780	1,775	$177,500	53,059	$565,867	7,729	$93,276	2,415	$6,593
1892	1,695	36,050	4,000	3,840	621	45,672	34,580	168,184	1,069	130,680	102,427	552,288	6,612	94,696	1,645	3,778
1893	1.545	32,485	4,200	4,082	1,198	40,402	25,980	113,160	2.847	313,170	96,299	509,509	7,393	132.746	1,465	3,060
1894	1,065	20,680	6,000	4,800	1,504	45,059	60,493	280,678	2,746	236,156	92,886	445,629	7,748	132,782	1,575	2,520
1895	*b*1,115	21,000	7,000	5,600	2,241	40,254	46,713	204,750	2,633	184,810	88,670	367.516	7,099	129,887	2,657	8,599
1896	850	16,260	6,000	6,000	5,086	60,590	45,456	177,728	2,616	167,424	90,408	424,719	7,659	170,602	3,148	10,193

Year.	Iron Ore.		Iron and Copper Pyrites.		Lead Ore.		Mineral Fuel. (*c*)		Manganese Ore.		Manganiferous Iron Ore.		Mercury Ore.	
1891	216,486	$553,437	19,868	$54,118	30,238	$1,196,846	289,286	$441,170	2,429	$12,919	(*f*)	....	(*f*)	....
1892	214,487	554.431	27,670	71,987	38,810	1,189.098	295,718	496,078	1,348	8,359	4,622	$8,320	(*f*)	....
1893	191,305	356,533	29,460	72,227	29,004	818,107	317.249	484,701	810	6,549	8,805	14,968	19,450	$221,069
1894	187,728	417,831	22,638	59,269	29,822	758,422	271.295	378,792	760	4,700	5,810	9,296	15,022	208,443
1895	183.871	405,711	38,586	85,741	30,632	813,324	305,321	483.555	1,569	14,128	5,860	9,376	10,504	166,690
1896	203,966	507,973	45,728	108,825	33,545	892,865	276,197	396,372	1,890	20,450	10,000	20,000	14,305	147,570

Year.	Petroleum.		Salt, Rock.		Salt from Brine.		Silver Ore.		Sulphur, Crude.				Zinc Ore.	
									Ground.		Fused.			
1891	1,155	$69,620	31,285	$75,890	9,258	$53.390	2,006	$394,697	(*d*)	....	(*d*)	....	120,685	$2,544,121
1892	2,548	150,900	15,504	49,619	8,217	38.455	1,680	345,898	15,500	$164,800	403,055	$7,680,033	129,731	2.722,099
1893	2,652	159,010	16,790	56,910	8,602	39,811	1,236	235,595	16,300	136,920	401,371	5,786,415	182.767	2,093,415
1894	2,854	169,452	19,467	56,974	11,326	57,861	1,108	169.444	13,850	96,950	391,931	4,956,641	131,777	1,839,791
1895	3,594	186,099	18.710	56,019	10,605	54,171	870	128,273	(*f*)	....	370,766	4,134,588	121.197	1,542.905
1896	2,524	128,894	17,300	52,024	11,974	61,298	640	107,251	(*f*)	....	....	....	118,171	1,498,129

REFINED PRODUCTS OF ITALY. (*a*) (IN METRIC TONS AND DOLLARS; 5 lire — $1.)

Year.	Antimony.		Asphalt, Mastic and Bitumen.		Boracic Acid, Refined.		Borax, Refined.		Briquettes.		Copper and Alloys.	
1891....	218	$37,714	9,375	$66,020	....	....	*e*2,056	$267,280	644,005	$4,099,570	5,977	$2,943,229
1892....	315	53,822	9.270	78,570	....	....	*e*1,471	191.230	612,069	3,883,631	6,039	2,159,469
1893....	376	59,560	8,905	65,712	87	$11,745	1,099	131,916	559,990	3,614,530	6,911	2,336,247
1894....	351	57,626	7,820	49,826	170	22,100	1,141	136,872	527,904	3,207,265	7,048	2,466,927
1895....	423	56,986	14,491	75,920	253	29,807	944	101,930	451,470	2,527,564	8,506	2,675,064
1896....	538	72,440	12,490	75,280	2,526	32,838	9,438	79,279	422,409	2,081,645	10,319	3,423,050

Year.	Gold—Kg.		Iron, Cast.		Iron, Pig.		Iron, Sheet, Tinned.		Lead.		Mercury.		Petroleum, Benzine, etc.	
1891....	284.0	$166,840	11,930	$315,209	152,668	$7,870,859	(*f*)	....	16,500	$1,139,600	330	$356,400	818	$74,448
1892....	330.0	204,579	12,729	411,246	124,278	6,278,691	320	$32,000	22,000	1,144,000	325	305,500	1,578	154,495
1893....	362.0	224,203	8,088	230,921	138,046	6,826,843	2,500	250,000	19,898	994,900	273	264,737	2,613	258,676
1894....	349.0	252,057	10,329	301,389	141,729	6,648,615	5,750	563,000	19,605	968,446	258	227.040	1,640	198,520
1895....	280.0	199,453	19,500	539,423	163,824	6,962,837	5,860	555,360	20,358	1,078,920	199	189,308	4,191	440,953
1896....	274.7	189,024	15,321	592.034	139.991	6,606,951	2,918	256,784	20,786	1,162,469	186	174,840	2,734	296,147

Year.	Salt, Sea.		Silver—Kg.		Steel.		Sulphate of Aluminum.		Sulphur.			
									Refined.		Ground.	
1891....	347,274	$613,555	37,600	$1,208,200	75,925	$3,950,766	1,777	$39,140	59,396	$167,929	95,215	$2,719,329
1892....	395,269	800.831	43,000	1,281,400	56,543	2,756,499	1,890	40,450	59,370	1,521,265	123,260	3,074,019
1893....	397,506	929,522	40,095	1,130,679	71,380	3,397,426	2,050	43,120	70,707	1,806,120	94,624	1,912,478
1894....	402,515	830,382	58,626	1,289,772	54,614	3,353,852	2,480	45,960	71.295	1,152,576	90,561	1,654,465
1895 ...	418,335	957,529	44,189	1,007,460	50,314	3,794,256	2,950	58,760	75,329	1,125,494	91,517	1,473,068
1896....	422,555	856,072	38,075	882,228	65,955	4,874,539	2,390	41,020	71,072	1,198,447	89,292	1,602,797

(*a*) From *Rivista del Servizio Minerario.* (*b*) Including 120 tons of soda alum. (*c*) Includes anthracite lignite, fossil-wood, and bituminous schist. (*d*) In 1891 there were produced 395,528 tons of crude sulphur, value $8,905,091. (*e*) Crude borax. (*f*) Not reported.

MINERAL IMPORTS OF ITALY. (*a*) (IN METRIC TONS AND DOLLARS; 5 lire = $1.)

Year.	Antimony.		Arsenic.		Asbestos.		Bitumen, Solid.		Brick, Tile, etc.		Building Stone.	
1892........	36.8	$8,832	1,200	$1,152	96.5	$15,440	5,135	$82,157	13,611	$95,072	*b* 123,592	$509,704
1893........	39.2	8,389	1,000	300	193.0	27,020	4,023	64,371	14,723	103,595	*b* 114,097	474,316
1894........	30.4	5,715	1,200	348	856.7	102,804	9,380	150.080	15,336	107,640	58.875	250,940
1895........	41.6	7,238	1,200	348	530.8	47,772	6,075	97,205	14,623	103,193	49,775	218,764
1896........	38.2	6,112	(*h*)	....	850.8	76,572	11,893	190,277	18,504	129,528	73,345	310,344

Year.	Carbonate of Sodium.		Cement and Hydraulic Lime.		Chalk.		Coal.		Colored Earths		Copper and Brass.	
1892........	17,026	$510,792	19,764	$177,876	17,750	(*c*)	3,877,571	$19,000,098	764.3	$18,343	41.3	$41,300
1893........	18,602	483,655	19,555	175,995	24,843	(*c*)	3,724,401	18,622,005	907.2	21,773	39.5	40,685
1894........	19,122	458,830	14,100	126,900	14,866	(*c*)	4,696,258	22,072,413	1,149.6	27,590	43.1	43,100
1895........	19,949	359,078	15,120	136,080	17,102	$119,714	4,304,787	17,219,148	933.6	22,406	45.5	45.500
1896........	18,927	329,335	12,810	115,290	15,716	110,012	4,081,218	17,141,116	851.7	20,441	66.4	66,400

Year.	Copper Ore.		Glass and Manufactures.		Gold, Manufactures. Kg.		Graphite.		Iron Ore.		Iron, Cast.			
											Pig.		Worked.	
1892........	2,458	$41.786	15,749	$1,350,031	1,609	$675,060	190.1	$9,505	2,210	$4,862	100,935	$1,514,020	7,490	$390,046
1893........	3,166	50,656	15,063	1,168,546	1,066	514,249	153.6	9,216	1,809	3,437	114,343	1,829,486	9,867	511,247
1894........	903	72,240	12,274	914,911	1.371	628,050	152.6	9,156	1,008	1,906	119,267	1,908,272	6,263	368,390
1895........	1,600	160,000	11,237	924,776	1,851	775,990	216.3	12,978	1,742	3,484	131,870	2.109,920	5,399	326,064
1896........	484	67,760	9,322	813,134	1,515	570,446	204.4	12,264	594	1,425	119,491	1,911,854	4,880	327,418

Year.	Iron and Steel. Plates, Rods and Manufactures.		Kaolin.		Lead.						Limestone. (*e*)	
					Ore. (*d*)		Pigs and Fragments.		Manufactures.			
1892........	231,510	$6,886,065	1,176	(*c*)	10,880	$391,680	2,166	$121,285	170	$35,820	57,331	*f* $610,056
1893........	264,230	7,139,218	1,914	(*c*)	10,047	321,504	1,657	89,489	105	44,067	58.002	*f* 593,313
1894........	244,903	6,704,733	2,417	(*c*)	18,379	387,991	1,499	80,924	131	34,463	85,975	*f* 722,806
1895........	263,672	6,880,541	2.924	$23,392	8,901	284,832	947	53,043	233	42,639	73,220	512,540
1896........	252,202	6,919,787	3,775	30,200	9,730	408,660	1,166	69,978	192	39,524	100,522	708,654

Year.	Lithographic Stone.		Marble, Crude.		Marble and Alabaster.		Majolica Wares.		Mercury.		Millstones.	
1892........	30.8	$1,848	216	$2,808	379.0	$31,380	422.5	$18,865	27.5	$24,200	(*g*)	....
1893........	186.5	13.055	550	7,150	244.6	31,260	340.6	16.916	13.1	11,345	(*g*)	....
1894........	204.8	14.336	350	4,200	294.7	50,799	359.7	16.532	11.4	9,576	320	$20.480
1895........	158.4	10,888	344	4,128	202.6	28.434	416.3	18,109	10.3	9,373	275	17,600
1896........	208.9	14,623	710	8,520	252.8	29,262	438.7	20,293	30.2	27,180	329	21,056

Year.	Nickel and Manufactures of.		Nitrate of Soda.				Porcelain.		Potash, Ammonia and Caustic Soda.		Potters' Clay and Manufactures.	
			Crude.		Refined, and Potassium Nitrate.							
1892........	158.7	$287,860	11,809	$542,827	419	$31,852	527.6	$162,952	8,630.4	$518,234	045.4	$153,760
1893........	296.8	430,787	11,281	609,152	618	46,580	499.1	155,096	8,496.7	476,064	865.4	129,080
1894........	672.1	742,215	6,128	306,425	601	45,653	496.1	148,630	9,665.7	541,499	715.9	106,540
1895........	248.6	804,826	12,670	582,825	569	39,865	484.4	132,181	9,906.7	439,140	748.5	117,060
1896........	411.3	473,139	11,685	537,501	541	40,320	441.0	128,128	9,840.7	458,087	786.6	120,820

Year.	Precious Stones, Manufactures. Kg.		Slag.		Silver.				Sulphate of Baryta.		Sulphate of Copper and of Zinc.	
					Bars, etc. Kg.		Manufactures. Kg.					
1892........	561.7	$1,274,288	9,660	$96,602	1,146	$29,796	4,955	$91,424	778.9	$9,346	3,453	$276,240
1893........	392.6	1,833,771	8,700	87,004	1,128	26,952	4,676	82,290	734.4	8,813	9,026	722,072
1894........	467.5	1,434,655	9,454	94,539	3,529	70,580	4,128	66,061	689.1	16,857	17,467	1,397,392
1895........	454.1	1,897,948	11,316	113,156	2,845	56,900	6,070	102,867	507.9	18,206	14,112	1,128,992
1896........	478.9	1,505,464	30,275	368,294	2,201	48,111	6,533	125,212	549.4	14,284	24,257	2,037,550

Year.	Sulphate of Potassium.		Sulphur, Crude and Refined.		Tin.				Terra Cotta.	
					Bars.		Manufactures.			
1892........	110.6	$7,300	49.8	$996	1,009.7	$484,656	101.9	$54,545	3,866	$119,998
1893........	158.0	9,480	24.8	397	1,156.2	531,852	88.3	45,878	3,762	116,907
1894........	346.4	19,396	267.4	3,851	1,297.6	508,469	77.3	84,558	2,274	71,922
1895........	262.2	14,688	255.2	8,318	1,484.0	516,482	87.3	35,520	2,583	79,194
1896........	431.1	24,142	4.7	72	1,763.5	581,965	90.6	85,156	2,675	84,622

Year.	Zinc.								All Other Ores.		Metals Not Specified.			
	Ore.		Oxide.		Bars.		Manufactures.				Crude.		Manufactures.	
1892........	350	$8,400	346.4	$31,176	1,583.2	$170,986	3,136.3	$443,742	455	$10,920	451.4	$31,598	2.8	$1,400
1893........	(*h*)	......	509.2	45,828	1,681.8	164,816	3,029.5	399,957	2,204	52,896	876.2	64,839	3.5	1,820
1894........	13	221	598.2	59,820	2,229.9	196,231	3,248.9	385,087	108	2,160	947.5	70,115	4.2	2,184
1895........	22	330	576.4	57,640	2,378.0	190,240	3,136.4	344,390	297	5,940	983.3	69,064	17.9	9,306
1896........	(*h*)	......	540.2	54,020	2,596.0	233,640	3,482.4	421,918	1,894	75,760	1,134.6	90,768	21.1	10,972

(*a*) From the *Movimento Commerciale del Regno d'Italia*. (*b*) Including millstones. (*c*) Value included under limestone. (*d*) Includes argentiferous lead ore. (*e*) Including other stones and non-metallic minerals. (*f*) Representing the values of chalk, kaolin, limestone, and other stones and non-metallic minerals. (*g*) Included under building stones. (*h*) Not reported.

MINERAL EXPORTS OF ITALY. (*a*) (IN METRIC TONS AND DOLLARS; 5 lire = $1.)

Year.	Alabaster, Crude.		Ammonia, Potash and Caustic Soda.		Antimony.		Asbestos.		Bitumen, Solid.		Brick, Tile, etc.	
1892........	65.8	$1,698	54.7	$3,557	329.1	$78,984	9.6	$1,536	3,254.6	$19,528	71,623	$506,075
1893........	42.0	1,092	74.2	4,649	258.1	55,233	3.6	504	5,059.6	30,358	89,826	547,824
1894........	114.0	2,964	72.4	4,408	278.6	52,378	70.3	8,436	6,091.3	36,548	107,197	610,273
1895........	176.1	4,579	42.7	3,125	254.1	44,213	29.3	2,637	9,535.5	57,213	127,177	727,210
1896........	289.0	7,514	88.2	7,453	361.0	57,760	129.7	11,673	13,729.2	82,375	143,648	809,823

Year.	Building Stone.		Carbonate of Sodium.		Cement and Hydraulic Lime.		Chalk.		Coal.		Colored Earths.	
1892........	*b*56,302	$181,918	282.8	$8,484	1,154	$10,386	4,969	(*c*)	12,919	$63,308	1,817.0	$43,608
1893........	*b*29,175	100,200	241.5	6,279	1,518	12,114	4,183	(*c*)	12,655	63,275	2,566.6	56,465
1894........	39,288	140,427	232.7	5,585	2,416	19,328	5,002	(*c*)	13,692	64,352	1,704.5	37,499
1895........	26,722	89,905	280.2	5,206	4,534	36,272	3,719	$18,595	16,497	65,988	1,923.3	42,313
1896........	23,580	93,699	279.0	4,855	3,871	30,968	5,593	27,965	18,924	71,481	2,411.6	53,055

Year.	Copper Ore.		Glass and Manufactures of.		Graphite.		Iron Ore.		Iron, Cast. Pig.		Iron, Cast. Worked.	
1892........	12,719	$216,223	4,701	$775,339	1,552.1	$15,521	124,755	$274,461	2,216.0	$33,241	142.9	$9,484
1893........	12,697	203,152	5,341	1,026,899	2,158.6	21,586	156,273	296,919	456.7	7,307	163.7	8,157
1894.......	7,789	112,162	5,551	1,069,004	2,285.1	18,281	159,205	302,489	1,052.9	16,846	264.2	13,241
1895........	5,859	87,885	6,327	1,198,147	3,153.3	25,226	164,367	328,734	965.9	15,454	430.1	27,510
1896........	3,603	61,251	5,867	1,066,612	3,727.1	29,817	187,059	448,941	1,378.5	22,056	427.3	26,006

Year.	Iron and Steel. Plates, Rods and Manufactures.		Kaolin.		Lead Ore, Including Argentiferous.		Lead and Lead Alloys, in Pigs.		Lead Manufactures.		Limestone.	
1892........	1,912.3	$226,763	1.9	(*c*)	6,695	$241,020	1,377	$77,134	1,289	$100,227	47,553	*d*$262,705
1893........	1,704.1	215,066	20.0	(*c*)	5,561	177,952	1,570	84,796	1,831	148,303	40,203	*d*222,030
1894........	1,345.9	164,411	18.0	(*c*)	6,354	184,266	1,157	62,505	1,762	135,687	55,677	*d*303,485
1895........	2,467.6	266,465	23.0	$184	6,622	211,904	2,153	120,596	1,492	125,716	45,139	225,695
1896........	1,819.5	227,305	49.0	392	4,731	151,392	1,419	85,140	1,441	141,019	37,676	188,380

Year.	Marble, Crude.		Marble and Alabaster.		Mercury.		Millstones.		Nickel, Alloys, and Manufactures of.		Nitrate of Soda, Crude.	
1892........	77,751	$1,010,763	57,917	$2,046,234	262.2	$230,736	(*e*)	....	0.5	$1,000	88.5	$4,248
1893........	72,845	946,985	56,448	2,084,587	235.0	203,510	(*e*)	....	5.6	15,264	32.5	1,755
1894........	72,812	873,744	51,211	1,827,062	337.0	283,080	56	$3,584	14.0	20,665	24.6	1,230
1895........	75,462	905,544	58,371	1,796,680	213.1	193,921	30	2,496	1.7	3,422	26.9	1,287
1896........	80,750	969,000	68,639	1,987,828	155.1	189,590	156	9,984	34.7	34,229	51.1	2,351

Year.	Nitrate of Soda and Potash, Refined.		Porcelain.		Potters' Clay and Manufactures.		Salt, Sea and Rock.		Slag.		Silver—Kg.	
1892........	266.2	$20,231	114.3	$27,962	476.3	$69,610	178,039	$391,686	6,997	$6,997	73,390	$2,123,810
1893........	187.2	14,227	90.8	22,793	556.1	79,800	157,362	346,196	3,599	3,590	51,856	1,400,112
1894........	292.7	22,245	102.0	26,024	471.4	72,700	172,819	379,102	2,454	2,454	134,305	3,035,298
1895........	378.4	26,488	161.1	35,566	590.7	90,010	209,395	460,669	2,469	2,469	37,013	836,494
1896........	306.5	23,751	98.8	24,912	1,142.5	157,100	171,741	360,656	4,753	4,753	26,854	644,496

Year.	Sulphate of Baryta.		Sulphate of Copper and of Zinc.		Sulphur, Crude and Refined.		Tin. Pigs, Bars, etc.		Tin. Manufactures.		Terra Cotta.	
1892........	57.3	$698	46.0	$3,680	291,081	$5,821,614	8.1	$3,888	30.2	$16,060	3,295	$112,686
1893........	24.8	298	17.4	1,392	310,867	4,973,878	13.5	6,210	31.7	16,307	2,202	72,252
1894........	24.6	639	18.3	1,464	299,090	4,306,890	8.5	3,298	62.6	27,592	1,857	61,593
1895........	1,053.8	27,399	12.0	960	317,566	4,128,359	7.2	2,506	74.4	29,822	2,509	79,737
1896........	65.6	1,705	71.4	5,998	356,370	5,452,461	9.9	3,267	89.1	33,994	2,852	97,548

Year.	Zinc. Ore.		Zinc. Oxide.		Zinc. Pigs, Bars, etc.		Zinc. Manufactures.		Other Ores.	
1892........	119,286	$2,862,864	67.2	$6,448	7.9	$845	1.4	$560	8,823	$105,876
1893........	113,218	2,264,360	36.7	3,303	(*f*)	....	7.2	2,223	7,334	88,008
1894........	123 268	2.095.556	34.3	3,430	(*f*)	....	5.9	1,561	6,939	69,390
1895........	111,227	1,668,405	19.3	1,930	3.9	312	9.4	2,165	2,072	20,720
1896........	115,454	1,847,264	48.4	4,840	33.1	2,979	8.4	2,644	15,296	152,960

(*a*) From the *Movimento Commerciale del Regno d'Italia.* (*b*) Includes millstones. (*c*) Values included under limestone. (*d*) Representing the values of chalk, kaolin, and other non-metallic minerals. (*e*) Included under "Building Stone." (*f*) Not reported.

JAPAN.

The mineral production of Japan is reported in the subjoined tables. The Japanese are rather backward in publishing their mineral statistics, those for 1895 being the latest that have been issued.

MINERAL PRODUCTION OF MINES IN JAPAN WORKED BY THE GOVERNMENT. (*a*)

(In metric tons.)

Fiscal Year.	Coal.	Copper.	Copper Sulphate.	Gold—Kg.	Lead.	Pig Iron.	Silver.
1890-91	6,699	24	347	260.49	(*f*)	2,192	7,026.1
1891-92	14,925	17	853	217.72	(*f*)	1,969	5,980.1
1892-93	21,945	275	63	278.77	70	1,417	8,584.1
1893-94	20,123	149	(*f*)	306.12	162	1,186	10,422.9
1894-95	22,506	277	(*f*)	372.15	50	1,210	10,991.1
1895-96	24,947	321	(*f*)	334.11	20	1,189	8,528.1

MINERAL PRODUCTION OF JAPANESE PRIVATE MINES. (*a*) (IN METRIC TONS). (*b*)

Year.	Alum, Refined	Antimony.		Arsenic Kg.	Asphalt, Refined.	Coal.	Copper.	Copperas	Gold.	Graphite.	Iron.
		Ore.	Metal.								
1890	11.8	1,798.5	96.5	289.0	4.7	2,616,740	18,221	948.9	474.54	4,573	18,857
1891	4.8	2,205.0	62.6	7.5	5.1	3,184,838	19,008	569.2	483.59	2,464	15,373
1892	(*f*)	1,343.5	42.2	1,025.0	(*f*)	3,185,860	20,521	(*f*)	396.19	601	17,583
1893	(*f*)	1,526.2	122.2	3,324.0	(*f*)	3,329,313	17,874	766.5	445.03	26	15,851
1894	(*f*)	1,170.6	403.3	5,387.0	(*f*)	4,280,247	19,665	904.4	499.83	1,091	18,258
1895	(*f*)	1,060.7	(*f*)	7,343.0	(*f*)	4,747,707	18,826	(*f*)	563.31	77	24,653

Year.	Lead.	Lignite	Manganese.	Mercury. Kg.	Ocher, Red.	Petroleum, Refined.	Salt—Hectoliters.		Silver. Kg.	Sulphate of Copper	Sulphur, Refined	Tin.
1890	776.1	18,933	2,596	357	4.8	1,680	8,778,391	$4,521,481	45,970.0	27.2	20,736	47.6
1891	802.9	15,119	3,229	169	17.0	1,955	9,934,252	4,075,742	52,805.3	22.7	21,956	44.4
1892	819.7	(*f*)	5,027	14,855	(*f*)	2,018	10,202,488	3,584,098	51,026.8	(*f*)	20,511	41.4
1893	940.7	(*f*)	14,169	2,141	1.6	1,644	12,006,374	3,666,349	58,934.3	(*f*)	23,930	38.1
1894	1,414.8	(*f*)	13,368	*e*1,547	(*f*)	*c*22,837	11,411,275	3,483,078	68,798.9	(*f*)	18,787	38.7
1895	1,927.9	(*f*)	17,142	481	(*f*)	*d*26,965,764	(*f*)	(*f*)	63,824.1	(*f*)	15,557	48.3

(*a*) From *Résumé Statistique de l'Empire du Japon*, Tokio. The data contained in the table of production of the Government mines are nearly exact, but those contained in the table of private mines, being the figures furnished by the mine owners themselves, are only an approximation and considerably less than the actual figures. Besides the ores named in this table, there was produced in 1891, iron pyrites, 5,162 metric tons. (*b*) In making the conversions from the Japanese units to metric tons, hectoliters and dollars, the following relations were employed: 1 kwan = .0037565 metric tons; 1 koku = 1.8039 hectoliters; 1 yen = $1; 1 troy ounce = 32.151 kg. (*c*) Crude product. (*d*) Number of liters. (*e*) Refined product. (*f*) Not reported.

MEXICO.

The Mexican government collects no statistics of production; those compiled by **The Mineral Industry**, which represent all the important substances, will be found under the respective captions "Lead," "Copper," "Coal," etc.

MINERAL EXPORTS OF MEXICO (*a*) (IN METRIC TONS AND MEXICAN DOLLARS.) (*d*)

Year.	Antimony Ore.		Asphalt.		Building Material.		Coal.		Copper.				
									Ore.		Ingot. (*c*)		Argentiferous.
1893......	9	$300	10	$422	190	1,653	30,593	$135,128	1,746	$50,471	14,637	$2,756,347	$276,842
1894......	80	2,836	17	434	263	3,605	45,911	189,824	1,904	63,921	8,454	1,288,699	102,862
1895......	600	14,281	(*b*)	....	1,355	5,774	61,686	255,355	3,006	523,650	20,429	3,387,586	(*b*)
1896......	3,231	32,093	17	2,134	9,934	45,418	75,541	312,738	144	5,210	20,659	4,008,404	(*b*)
1897......	5,873	71,835	10	282	1,808	7,858	105,298	434,624	1,094	176,391	16,858	3,829,331	(*b*)

Year.	Gold.						Guano.		Gypsum.		Iron Ore.	
	Coin.	Ore.	Bullion.	Mixed.	Cyanide	Sulphide.						
1893......	$114,167	$3,996,780	$247,934	$471,915	(*b*)	(*b*)	1.6	$144	1,616	$17,180	(*b*)	......
1894......	243,532	40,460	1,857,563	233,728	(*b*)	(*b*)	(*b*)	....	1,488	13,762	27	$750
1895......	175,093	103,773	4,920,504	(*b*)	$31.231	$3,026	1,179	34,037	1.340	4,270	1,012	2,572
1896......	261,078	206,874	5,533,789	(*b*)	161,784	44.890	1,001	15,663	2.050	10,250	1	30
1897......	202,223	365,226	6,220,765	(*b*)	226,986	33,916	1,098	14,615	2,095	7,775	(*b*)	......

Year.	Jewels and Precious Stones. Grams.		Lead.					Marble.		Pearls—Carats.		Plumbago.	
			Ore.		Bullion.		Argentiferous						
1893......	126	$6,911	(*b*)	....	1,194	$284,955	$8,899	3,097	$293,155	650	$3,280	55	$18,000
1894......	18,489	36,173	294.0	$9,382	16,606	773,133	5.247	1,220	110,202	846	19,230	663	9.171
1895......	81,396	54,891	528.0	30,165	50,122	2,371,574	(*b*)	1,810	229,495	304	9,500	794	9.121
1896......	1,357	1,113	167.0	4,820	48,663	1.340,785	(*b*)	2,258	210,836	225	5,500	795	7.290
1897......	3,880	5,628	1.9	87	60,029	3,006,821	(*b*)	2,176	185,004	1,420	6,000	759	6,698

Year.	Quicksilver. Kg.		Silver.							Tin.	
			Coin.	Ore.	Slag.	Bullion.	Sulphide.	Cyanide	Mixed.		
1893......	......	......	$22.541,480	$9,870,286	$22,100	$4,154,272	$1,296.481	(*b*)	$4,219,748	19.0	$4.636
1894......	410	$600	16,251,832	10,265,625	65.008	10,431,573	749,512	(*b*)	2,169,664	42.0	10,015
1895......	2,378	3,910	18.300,553	10.977,079	72,590	22,178,294	555.475	14,649	(*b*)	39.0	22,911
1896......	450	770	18,737,331	9,971,053	64,121	28,565,843	1,495,306	38,049	(*b*)	5.0	2,265
1897......	1,845	3,150	21,925,847	11,401,176	39.800	35,775,125	1,663,581	123,246	(*b*)	0.6	40

(*a*) From the *Estadistica Fiscal*. The figures for the calendar years were arrived at by combining those of the successive semesters of the different fiscal years. (*b*) Not reported. (*c*) The Mexican statisticians have probably reckoned a considerable amount of copper matte as ingot. (*d*) The average value of the Mexican dollar in New York in 1893 was $0.5000; in 1894, $0.5000; in 1895, $0.5218; in 1896, $0.5228; and in 1897, $0.4671.

MINERAL IMPORTS OF MEXICO. (a) (IN METRIC TONS AND MEXICAN DOLLARS.) (d)

Year.	Aluminum. Kg.		Alabaster and Marble.		Antimony Regulus.		Arsenic. Kg.		Asphalt.		Cadmium. Kg.		Carbonates of Barium, Magnesium, and Strontium.	
1893......	27	$22	141	$6,021	2.8	$1,717	95	$50	653	$18,963	(b)	$91	7	$1,489
1894......	4	26	196	7,647	1.2	855	14,634	8,554	241	10,651	(b)	55	6	1,343
1895......	3,027	455	400	6,657	9.3	1,085	12,391	2,578	402	11,447	(b)	158	18	2,381
1896......	76	82	411	7,427	9.9	2,786	229	12	106	8,065	(b)	24	14	3,003
1897......	7,373	5,943	623	10,305	9.7	2,027	21,441	100	999	15,228	146	118	12	1,785

Year.	Carbonate of Lime.		Caustic Soda and Potash.		Coal.		Coal Tar.		Coke.		Copper.		
											Ores	Manufactures.	
1893......	43	$1,112	1,312	$79,954	198,950	$1,058,245	73	$3,765	73,765	$428,828	$76	99	$28,649
1894......	67	1,846	3,063	144,786	209,064	604,388	119	3,346	68,185	282,746	191	106	31,666
1895......	49	2,386	4,684	208,545	194,274	576,177	109	3,808	96,726	349,458	899	161	37,105
1896......	66	1,560	4,091	178,675	236,124	666,774	125	3,268	109,315	528,410	287	146	48,885
1897......	45	1,886	3,157	282,033	363,387	958,230	138	5,168	104,130	470,300	41,158	236	75,025

Year.	Copper Alloys.				Emery. Kg.		Fire Brick.		Gold and Silver Coin.	Gold, Silver, and Platinum.		
	Ingot.		Manufactures.							Bullion.	Manufactures.	
1893......	159	$41,516	899	$415,922	1,042	$191	2,897	$26,335	$128,470	$1,493	1,443	$151,190
1894......	305	88,495	404	399,381	9,127	1,182	3,042	27,518	717,345	68,596	7,208	176,025
1895......	967	78,058	757	556,880	2,497	1,183	4,983	25,300	30,467	140,562	2,051	215,409
1896......	245	72,708	678	649,024	2,680	324	5.550	18,932	68,922	158	1,102	161,263
1897......	287	75,348	658	518,908	1,429	196	2,681	22,636	68,103	452	494	71,688

Year.	Gypsum and Stucco.		Iodine—Kg.		Iron and Steel.		Iron and Steel Manufactures.		Jet—Kg.		Lead.	
1893......	20	$620	438	$2,359	19,678	$1,353,233	28,480	$1,384,753	380	$40	81	$8,963
1894......	7	466	522	2,393	c98,453	1,350,698	24,998	1,209,799	14	55	61	6,338
1895......	17	651	538	2,747	32,510	1,688,290	14,086	1,277,487	11,101	534	79	6.510
1896......	22	1,632	848	4,045	40,174	1,199,984	60,783	2,787,887	16	52	84	6,625
1897......	13	641	773	3,392	81,425	3,357,965	6,531	1,099,153	18,100	150	93	7.613

Year.	Lime and Cement.		Magnesium. Kg.		Millstones.		Mineral Wax.		Nickel- Kg.		Ochers.	
1893......	7,130	$77,815	83.0	$183	14	$2,099	51	$9,680	63	$7	8	$654
1894......	8,881	69,218	5.0	44	23	2,280	42	10,450	11	10	18	1,105
1895......	7,345	70,690	(b)	141	25	2,920	47	9,594	26	30	829	16,047
1896......	9,787	93,051	16.0	108	21	1,188	134	19,102	29	41	28	1,015
1897......	20,739	192,629	3.1	48	562	8,513	72	14,629	298	49	19	1,142

Year.	Precious Stones.	Pumice.		Plumbago.		Petroleum.		Potassium. Kg.		Quicksilver.		Refractory Clay, Rotten Stone, and Tripoli.	
1893......	$1,080	6	$577	25	$1,619	18,222	$357,563	9	$37	682	$567,963	331	$3,999
1894......	6,500	3	298	12	1,424	15,891	299,184	(b)	862	631	422,123	238	3,086
1895......	14,183	4	970	38	5.083	22,419	487.176	7	3	1,004	619.561	397	4,338
1896......	1,891	10	1,043	75	7,104	22,006	469,674	44	54	425	501,168	542	11,299
1897......	1,786	2	155	27	2,507	26,900	438,501	228	173	814	486,272	553	4,897

Year.	Spar.		Sodium. Kg.		Sulphates of Copper, Iron, and Ammonium.		Type Metal. Kg.		Tin, Lead, and Zinc Ores.		Tin, in Bars and Granules.		Zinc.	
1893......	1,057	$128	(b)	$95	977	$74,496	888	$500	13	$3,385	17	$6,557	4	$449
1894......	180	98	12	15	1,694	118.111	1,633	286	20	3,922	27	9,226	4	417
1895......	397	976	23	25	2,619	172,248	2	2	20	5,131	38	10,639	53	4.165
1896......	415	11	104	240	1,921	136,377	84	34	25	4,851	62	18,060	9	1,036
1897......	239	18	18	16	2,976	211,642	6	1	20	3,695	34	11,046	19	2,081

(a) From the *Estadistica Fiscal*; computed for calendar years. In 1893 there were imported also platinum manufactures, $87, and in 1894, iron ore, 353 kg., $18. (b) The Mexican statistics are here obviously incorrect, and quantities are not, therefore, reproduced.

NORWAY.

THE official statistics of mineral production, imports and exports, are summarized in the following tables:

MINERAL PRODUCTION OF NORWAY. (*a*) (IN METRIC TONS AND DOLLARS; 1 krone — 27 cents.)

Year.	Apatite. (*b*)		Cobalt Ore.		Copper Ore.		Feldspar. (*b*)		Iron Ore.	
1890........	11,119	$270,189	213	$20,250	18,769	$193,860	11,850	$57,591	1,300	$2,430
1891........	4,258	96,718	187	13,500	20,939	192,240	12,257	57,915	1,464	2,700
1892........	2,427	45,873	123	8,910	18,888	140,130	5,936	28,836	860	1,485
1893........	1,513	26,541	123	12,150	21,907	175,208	3,506	17,037	800	1,485
1894........	2,086	36,720	89	8,100	20,226	192,240	7,836	35,910	....	....

Year.	Nickel Ore.		Pyrites, Iron and Copper.		Silver Ore.		Zinc and Lead Ore.		Cobalt—Kg.	
1890........	8,181	$50,220	58,669	$272,700	1,811	$167,670	3,941	$36,990	2,600	$7,290
1891........	12,839	33,885	49,048	217,755	1,277	155,655	498	4,725	7,000	18,900
1892........	6,959	19,575	58,570	208,440	1,121	132,300	576	5,400	4,500	13,500
1893........	2,397	6,480	53,574	190,080	890	117,045	....	....	5,000	16,200
1894........	2,355	5,400	70,859	268,110	750	100,710	200	1,890	....	....

Year.	Copper.		Gold.	Iron, Pig and Cast.		Iron, Bar and Steel.		Nickel.		Rutile.		Silver—Kg.	
1890........	466	$125,550	$11,691	517	$6,966	691	$39,960	71	$47,250	....	....	5,080	$168,102
1891........	677	181,710	6,480	421	5,454	593	37,152	136	100,710	....	....	4,677	151,200
1892........	631	143,370	9,855	610	7,020	488	25,110	97	54,810	....	....	4,811	130,680
1893........	786	168,750	5,940	336	3,510	439	23,760	113	70,605	7,000	$1,620	4,778	117,855
1894........	907	151,200	1,080	287	3,240	433	19,980	103	63,450	19,000	4,050	4,760	102,600

(*a*) From *Tabeller vedkommende Norges Bergvaerksdrift*, and from *Statistisk Aarbog for Kongeriget Norge*, 1896, published by Det Statistike Centralbureau, Christiania. There were also produced in 1894, 7,000 kg. of molybdenite, value $3,780. (*b*) Export returns, which approximately represent the production.

MINERAL IMPORTS OF NORWAY. (*a*) (IN METRIC TONS AND DOLLARS; 1 krone — 27 cents.)

Year.	Borax and Boracic Acid. Kg.		Bricks. Thousands.		Cement and Hydraulic Lime. Hektoliters.		Coal, Coke, and Cinders—Hectoliters.		Copper and Brass.			
									Plates, Bolts, and Bars.		Wares.	
1891....	33,536	$5,427	1,261	$47,898	89,825	$145,530	11,143,160	$3,459,942	1,652	$490,617	364	$293,787
1892....	33,103	5,346	1,521	43,578	103,380	152,037	11,291,486	3,353,562	1,478	399,087	337	272,565
1893....	40,372	6,534	1,178	37,854	91,838	130,167	11,251,929	3,402,594	1,331	348,597	342	252,936
1894....	32,814	4,428	887	41,148	81,013	112,644	13,259,415	3,938,058	1,362	338,337	358	257,877
1895....	40,154	5,427	644	38,988	80,861	109,161	14,012,194	3,783,294	1,262	523,595	417	293,841
1896....	38,305	4,671	......	....	....	....	....	....	....	....	......	....

Year.	Earthenware.		Porcelain, Glazed and Unglazed.		Tiles. Thousands.		Glass and Glassware.		Iron.					
									Pig and Cast.		Bars, Hoops, Ships' Knees, etc.		Ships' Anchors and Cables.	
1891....	833	$123,714	124	$53,433	1,261	$17,766	4,337	$372,654	22,255	$324,486	27,271	$990,954	1,681	$122,526
1892....	790	123,660	108	46,575	1,521	21,681	3,881	354,457	15,206	201,177	24,936	845,424	1,389	89,991
1893....	797	120,447	106	44,280	1,178	16,956	3,910	389,799	17,070	218,916	22,974	765,045	1,271	82,323
1894....	1,043	157,653	116	48,627	887	12,852	3,729	407,268	20,876	270,540	23,559	742,500	1,246	77,409
1895....	1,087	156,816	108	45,036	644	9,261	3,343	407,592	19,654	254,718	24,985	790,695	1,152	71,523
1896....	.....	....	122	9,801	......	....	3,729	449,577	20,201	252,801	26,552	890,573	.....	....

Year.	Iron—*Continued.*						Steel.		Locomotives and Machines.	Lead, in Pigs and Sheets.		Lead White and Zinc Oxide.	
	Rails.		Nails, Spikes, Bolts, Screws, etc.		Other Manufactures of Iron.								
1891....	8,678	$109,080	1,282	$83,160	8,162	$1,195,479	1,738	$122,018	$1,322,271	651	$45,684	791	$89,567
1892....	8,364	248,400	1,281	88,025	10,763	1,438,479	1,383	82,161	1,133,838	587	36,477	746	84,591
1893....	8,482	251,910	1,144	71,087	11,809	1,496,178	1,897	107,595	1,207,035	729	43,281	808	75,924
1894....	10,878	293,706	1,482	80,028	14,486	1,554,768	3,058	165,105	1,388,907	797	45,225	981	80,406
1895....	10,337	279,099	1,796	96,984	15,588	1,805,652	3,654	197,289	1,963,488	657	38,988	1,068	89,424
1896....	......	....	......	....	......	....	2,754	·157,541	....	233	13,894	.....	....

Year.	Paraffine Oil, Petroleum, etc.		Potash.		Salt. Hectoliters.		Saltpeter.		Soda.		Sulphur. (*b*)		Tin, in Blocks, etc		Zinc, in Plates, Bars, etc.	
1891....	15,818	$512,514	629	$54,851	1,802,081	$580,955	320	$25,920	5,095	$82,424	5,165	$202,176	91	$44,307	921	116,910
1892....	23,418	695,250	717	58,104	1,447,438	547,128	197	15,957	4,291	72,981	6,866	223,452	59	38,620	901	104,652
1893....	24,232	654,264	662	53,649	1,680,184	635,121	290	23,490	5,878	87,291	5,415	146,205	87	40,095	1,027	108,189
1894....	29,324	791,748	780	63,207	1,611,769	609,255	404	32,697	5,002	67,527	5,991	145,584	85	32,130	864	81,675
1895....	27,978	982,044	562	47,034	1,289,334	468,477	227	17,199	5,234	56,511	7,271	176,688	99	34,884	978	87,129
1897....	......	....	945	79,083	....	....	308	23,247	5,156	55,674	9,847	227,124	65	21,816	1,101	107,055

MINERAL EXPORTS OF NORWAY. (*a*) (IN METRIC TONS AND DOLLARS; 1 krone — 27 cents.)

Year.	Apatite.		Bricks—Number.		Cobalt Ore—Kg.		Copper.					
							Ore.		Ingot.		Old Metal.	
1890........	11,119	$270,189	2,794,962	$11,691	96,470	$32,562	1,233	$19,980	557	$150,417	761	$137,598
1891........	4,258	97,713	58,496	270	43,880	13,041	1,649	26,703	597	153,063	849	144,450
1892........	2,427	45,878	446,472	1,917	98,670	26,649	1,845	24,921	350	80,352	729	112,212
1893........	1,518	26,541	3,510,772	14,229	35,200	9,504	11,874	144,261	378	81,702	961	137,511
1894........	2,086	36,612	3,650,552	12,825	68,700	18,549	14,811	151,956	397	80,325	814	98,955
1895........	1,601	23,760	5,016,158	20,304	30,000	8,910	20,283	219,051	705	142,722	810	109,404

Year.	Feldspar.		Glassware.		Iodine—Kg.		Iron.					
							Ore.		Pig and Old.		Bars and Hoops.	
1890........	11,850	$57,591	1,885	$157,680	6,300	$37,422	369	$702	3,610	$48,735	23	$999
1891........	12,257	57,915	2,091	129,789	7,621	45,279	752	1,431	2,091	27,108	118	4,779
1892........	5,936	28,836	1,858	119,664	6,298	35,721	69	135	2,980	34,614	155	6,264
1893........	3,506	17,037	1,495	101,115	4,015	22,761	510	972	4,767	54,054	62	2,430
1894........	7,836	35,964	1,159	107,892	10,074	57,132	1,607	3,024	4,679	53,055	462	17,469
1895........	9,780	44,901	1,153	89,721	2,683	15,201	1,545	2,916	8,188	92,826	19	702

Year.	Iron—*Continued.*		Steel.		Machinery.		Nickel.			
	Nails and Spikes.						Ore—Kg.		Metal—Kg.	
1890........	9,788	$900,234	178	$14,445	535	$144,842	500	(*c*)	171,004	$50,787
1891........	10,019	933,444	154	11,610	468	126,279	40,000	$270	151,432	44,982
1892........	8,916	741,123	119	8,046	649	175,311	(*c*)	....	56,444	16,767
1893........	8,559	692,307	104	6,696	402	108,621	340,060	2,295	177,253	50,247
1894........	8,081	625,509	160	9,504	1,578	426,087	160	(*c*)	146,384	40,311
1895........	10,408	781,758	133	7,884	1,100	297,055	(*c*)	....	(*c*)	....

Year.	Porcelain, Glazed and Unglazed.		Pyrites.		Silver Ore—Kg.		Stone, Ashlar.		Whetstones.	
1890........	195	$23,679	54,851	$229,554	367,780	$26,811	54,623	$221,211	149	$10,071
1891........	172	18,549	45,689	185,081	303,800	22,140	41,345	200,984	146	9,855
1892........	192	20,682	47,748	157,589	474,000	33,264	45,598	221,616	129	8,748
1893........	206	22,221	52,757	170,937	154,200	9,369	48,691	243,216	109	7,344
1894........	225	24,273	40,771	132,111	202,200	10,908	52,344	247,320	189	12,771
1895........	286	30,888	39,710	128,655	136,800	5,535	54,888	237,114	169	11,421

(*a*) From *Statistisk Aarbog for Kongeriget Norge*, except imports for 1896, which are from *Tabeller vedkommende Norges Handel i Aaret*, 1896. (*b*) Inclusive of flowers of sulphur. (*c*) Not reported.

PORTUGAL.

THE mineral statistics of Portugal are summarized in the subjoined table, for which we are indebted to the courtesy of Senhor Luciano Augusto da Fonseca Monteiro, chief of the Reparticao de Minas, Ministerio das Obras Publicas of Portugal.

The statistics of mineral production in Portugal in years prior to 1892 may be found in THE MINERAL INDUSTRY, Vol. II. It will be observed that the mineral industry of Portugal has not yet attained much importance, the output of copper and copper ore forming the chief part of the total. This is principally the production of the Mason & Barry Co., Ltd., an English company, whose report for 1897 is to be found under the caption "Copper," elsewhere in this volume.

MINERAL PRODUCTION OF PORTUGAL. (*a*) (IN METRIC TONS AND DOLLARS; 1 milreis — $1.08.)

Year.	Amianthus.		Anthracite. (*b*)		Antimony Ore.		Copper Ore.		Copper (Cement).		Copper Pyrites.	
1892......	17	$330	12,265	$45,369	996	$87,275	79	$981	8,722	$613,810	28,723	$41,585
1893......	(*c*)	....	18,213	37,705	760	55,826	(*c*)	....	6,886	603,143	38,710	59,743
1894......	(*c*)	....	10,017	32,839	808	48,952	321	3,954	6,924	498,675	44,005	132,707
1895......	(*c*)	....	8,787	35,820	753	36,589	202	3,822	5,055	498,788	32,814	99,020
1896......	(*c*)	....	8,743	17,944	595	28,917	436	10,535	3,458	467,897	43,665	139,525

Year.	Copper Pyrites (Dressed).		Galena.		Galena (Argentiferous).		Gold Ore.		Iron Ore.		Lignite. (*b*)	
1892......	67,222	$73,689	1,171	$31,269	(*c*)	....	(*c*)	....	11,830	$4,895	5,636	$15,883
1893......	143,942	124,055	1,261	22,743	(*c*)	....	(*c*)	....	8,383	1,811	4,632	18,247
1894......	208,241	245,621	1,718	27,445	(*c*)	....	(*c*)	....	620	835	9,649	25,002
1895......	162,499	227,025	1,346	27,690	25	$513	222	$3,159	(*c*)	....	10,309	22,090
1896......	163,775	224,634	1,333	30,236	(*c*)	....	(*c*)	....	(*c*)	....	8,000	18,306

Year.	Manganese Ore.		Silver—Kg.		Tin Ore.		Wolfram Ore		Zinc Ore.	
1892......	3,399	$25,523	(*c*)	......	16	$4,700	1.9	$250	25	$324
1893......	4,080	34,520	(*c*)	......	45	11,066	(*c*)	....	28	302
1894......	5,246	33,866	76	$741	26	6,270	18.9	2,284	(*c*)	......
1895......	1,240	8,250	(*c*)	......	3	528	12.4	2,786	(*c*)	......
1896......	1,494	14,679	(*c*)	......	6	756	14.0	3,640	(*c*)	......

(*a*) From a report specially furnished THE MINERAL INDUSTRY by Senhor Luciano Augusto da Fonseca Monteiro, Chief of the Department of Mines of the Ministerio das Obras Publicas. (*b*) Consumed in the country. (*c*) No report, probably none.

RUSSIA.

THE official statistics of mineral production, imports and exports, are given in the subjoined tables. The Russian official statistics of production are somewhat tardy in appearance, the latest being those for 1896. Statistics of the production of gold, silver, copper, zinc, petroleum, quicksilver, and pig iron for 1897 have been reported, however, especially to THE MINERAL INDUSTRY, and will be found under the respective caption elsewhere in this volume.

It will be observed that the statistics of gold production in 1896 in the following table differs from those used in the summary of the world's gold production on a previous page of this volume. Reference should be made to the latter for an explanation of this discrepancy. Small discrepancies in the statistics of production of zinc and other metals are explained by the insertion in the subjoined tables of official statistics received after the earlier pages had gone to press.

MINERAL PRODUCTION OF RUSSIA. (*a*) (IN METRIC TONS AND DOLLARS (*b*).)

Year.	Asbestos.		Asphaltic Mastic.		Chrome Iron Ore.		Cobalt Glance.		Coal.		Copper.		Glauber Salt.		Graphite.	
1891..	1,184	$8,000	14,039	$108,000	3,097	$37,800	10	......	6,233,025	$7,901,480	5,456	$1,542,000	3,982	$38,400	164	$8,000
1892..	1,239	8,000	15,442	118,760	8,007	7,509	20	......	6,945,994	8,416,720	5,315	1,476,427	2,481	18,099	88	4,000
1893..	1,059	6,836	14,925	114,800	14,585	35,101	8	......	7,618,724	9,225,200	5,463	1,586,526	5,037	36,754	311	15,200
1894..	570	3,400	16,054	176,422	7,537	18,760	9	......	8,762,840	11,473,600	5,419	1,820,800	4,014	28,800	...	......
1895..	1,131	6,800	18,783	143,542	21,013	51,316	8	......	9,099,476	12,150,400	5,854	1,429,516	4,207	15,612	...	......
1896..	.....	......	......	....	......	....	....	......	....	....	5,416	....	.....	....	...	......

Year.	Gold—Kg.		Iron, Cast.		Iron Pyrites.		Lead.		Manganese Ore.		Naphtha.		Phosphorites.	
1891 .	39,063	$17,980,000	1,004,746	$16,710,800	18,353	$44,800	559	$30,680	113,081	$198,800	4,756,417	$3,190,280	17,497	51,209
1892..	42,997	20,921,600	1,071,772	18,357,586	14,109	45,200	883	49,160	203,237	370,800	4 896,179	1,990,686	23,298	40,445
1893..	44,865	21,869,708	1,148,902	19,100,000	16,271	51,200	844	46,922	268,021	669,100	5,790,692	2,781,851	13,706	36,994
1894..	42,932	20,985,200	1,332,465	22,200,000	19,801	48,000	743	36,000	243,469	490,800	5,161,552	3,916,800	14,072	31,680
1895..	41,097	18,812,993	1,452,337	22,312,800	11,042	31,200	412	20,000	203,081	388,522	7,056,330	11,490,800	6,327	18,682
1896..	37,175	....	....	....	......	....	...	....	....	....	....	....	....	......

Year.	Platinum—Kg		Porcelain Clay.		Quicksilver		Salt.		Silver—Kg.		Sulphur.		Tin.		Zinc.	
1891..	4,242	$776,800	5,202	$34,320	323	$356,000	1,851,186	$2,586,280	13,726	$350,400	336	$4,120	9	$3,440	3,676	$394,800
1892..	4,570	558,400	4,149	16,874	343	376,000	1,458,508	2,404,000	11,187	304,000	403	4,920	9	3,520	4,869	416,000
1893..	5,094	917,231	3,197	12,848	201	220,484	1,351,056	2,224,234	9,500	276,696	589	7,200	7	2,501	4,501	428,604
1894..	5,202	890,400	7,742	30,400	196	153,200	1,354,218	1,723,200	7,813	227,200	1	18	4	1,440	5,014	367,336
1895..	4,406	883,960	25,330	101,200	434	371,000	1,540,194	2,383,743	7,878	239,068	85	2,316	8	5,068	5,029	360,000
1896..	.....	....	......	....	491	....	....	....	....	....	...	....	..	....	6,257	....

(*a*) From the Russian official mining report "Sbornik Statisticheskekh Svedenie o Gornozavodskoi Promyshlennostye Rossie v Zavodskom Godu," St. Petersburg. (*b*) In the Russian reports the quantities are stated in poods and the values in silver rubles. In making the reductions the following relations were employed: 1 poud = .01638 metric ton; 1 silver ruble = 40 cents.

MINERAL IMPORTS OF RUSSIA. (*a*) (IN METRIC TONS AND DOLLARS.)

(1 poud = .01638 metric ton; 1 ruble = 40 cents.)

Year.	Asbestos.		Asbestos Manufactures		Asphalt Rock.		Baryta and Witherite.		Clay, Bauxite, and Talc.		Coal.		Coke.	
1891..	15	$617	40	$11,069	363	$2,318	2,056	$21,252	21,248	$131,578	1,542,516	$4,226,782	201,994	$628,485
1892..	52	5,988	101	23,093	1,115	20,657	3,524	31,719	38,615	267,982	1,498,158	4,144,014	230,109	742,420
1893..	38	1,060	108	19,924	349	2,600	4,083	33,289	52,598	322,717	1,715,258	4,776,731	289,978	968,914
1894..	49	5,819	197	34,192	458	5,654	6,355	40,797	64,428	418,048	1,978,516	5,361,537	290,822	925,762
1895..	107	8,186	241	58,888	566	3,465	7,703	65,297	55,212	327,838	1,984,289	5,298,392	310,113	961,475

Year.	Copper and Alloys.		Copper and Brass Manufactures.		Glauber Salts.		Gold Bars and Coin—Kg.		Iron.			
									Castings.		Pig.	
1891..	5,326	$1,360,906	1,438	$887,640	1,698	$80,000	83.187	$38,928,713	2,578	$337,758	51,383	$1,255,961
1892..	10,485	3,085,878	1,318	801,724	1,819	43,009	134.670	41,745,812	2,276	260,216	90,099	1,500,818
1893..	13,814	4,047,212	*d*1,480	882,232	2,649	88,728	17.019	5,278,049	3,031	326,122	160,507	2,757,088
1894..	8,033	3,352,393	*d*1,558	985,508	3,644	99,052	(*b*)	....	4,669	468,440	144.641	2,299,316
1895..	11,679	2,725,159	*d*1,598	1,045,372	3,303	79,883	(*b*)	....	4,799	602,644	127,202	2,227,129

Year.	Iron—*Continued.*						Iron and Steel Manufactures.		Lead.		Magnesite.	
	Pyrites.		Tin Plate.		All Other.							
1891..	12,181	$66,848	12,319	$1,970.182	62,118	$3,058,705	17,729	$3,992,690	20,386	$1,268,609	724	$2,787
1892..	14,686	110,498	28,283	2,080,870	40,337	2,549,708	17.435	3,804,331	26,075	1,800,277	985	11,559
1893..	11,594	215,734	22,182	2,309,751	87,449	4,368,469	(*b*)	2,121,317	18,712	1,481,455	720	17,056
1894..	36,950	279,076	20,790	1,491,923	188,418	8,689,817	19,171	3,143,306	11,979	1,620,084	276	5,057
1895..	22,410	341,398	30,489	2,194,164	218,985	10,182,897	20,214	3,205,413	29,556	1,820,843	1,127	20,094

Year.	Mica—Kg.		Naphtha, Crude.	Oil, Kerosene, Benzine, etc.		Ores, Except Graphite.		Other Metals, Manufactures of.		Phosphorites.		Quicksilver.	
1891..	377	$142	$293	153	$12,914	4,414	$70,919	464	$186.298	(*b*)	....	5	$3,981
1892..	409	129	6	317	28,049	3,140	104,339	489	250,165	10,785	$107,790	6	4,489
1893..	377	348	11	362	28,664	1,022	2,261	479	106,241	14,815	156,032	10	7,312
1894..	2,162	529	10	465	31,249	(*b*)	....	1,573	982,444	27,006	356,372	11	5,922
1895..	2,407	917	(*b*)	537	44,494	1,584	19,800	12,370	3,374,097	(*b*)	....	7	6,986

Year.	Salt.		Saltpeter, Chile.		Salts, Stassfurt.		Silver—Kg.		Steel, All Kinds.		Strontianite and Celestine.		Sulphur.	
1891..	14,291	$90,454	2,881	$105,648	3,277	$41,126	249,779	$4,221,642	14,540	$1,335,108	69	$682	13,923	$273,314
1892..	11,000	68,264	10,982	394,856	2,770	21,219	223,161	3,760,715	16,396	1,391,168	312	1,670	16,124	327.872
1893..	6,914	40,946	8,487	183,537	4,746	37,528	428,107	7,249,674	35,130	2,151,926	404	18,814	23,569	407,818
1894..	10,433	65,692	14,083	357,504	5,190	56,308	(*b*)	....	38,805	3,782,477	575	24,986	19,893	384,752
1895..	10,332	57,400	12,315	294,788	4,463	41,088	(*b*)	....	52,523	3,003,229	34	1,118	19,525	233,233

Year.	Tar, Asphaltic Mastic, etc.		Tin.		Zinc.			
					Ore.		Ingot and Sheet.	
1891..	1,225	$26,505	2,240	$570,984	744	$7,270	5,144	$490,757
1892..	3,060	76,390	2,954	640,276	(*b*)	....	5,683	543,366
1893..	52,598	322,717	4,007	868,763	(*b*)	....	8,146	909,670
1894..	3,021	74,075	3,386	688,333	(*b*)	....	8,289	879,164
1895..	2,721	77,668	3,417	705,597	(*b*)	....	9,194	962,106

(*a*) From the Russian official report "Sbornik Statisticheskekh Svedenie o Gornozavodskoi Promyshlennostye Rossie v Zavodskom Godu," St. Petersburg.

(*b*) Not reported.

(*c*) Included under copper and brass manufactures.

(*d*) Includes bronze manufactures.

MINERAL EXPORTS OF RUSSIA. (*a*) (IN METRIC TONS AND DOLLARS.)

(1 poud = .01638 metric ton; 1 ruble = 40 cents.)

Year.	Bronze and Manufactures.		Clay, Bauxite, and Talc.		Coal.		Copper and Alloys.		Copper and Brass Manufactures.		Gold Coin and Bullion—Kg.	
1891..	(*f*)	$18,469	(*f*)	....	11,188	$29,822	71	$18,003	255	$127,900	796.0	$246,395
1892..	(*f*)	7,042	409	$1,454	8,206	27,035	49	14,848	267	136,939	296.5	92,579
1893..	(*f*)	....	387	(*f*)	7,889	24,174	51	15,912	259	19,983	229.0	68,578
1894..	(*f*)	10,290	166	1,227	7,544	20,870	47	12,154	......	86,146	(*f*)	....
1895..	(*f*)	5,709	1,522	3,542	165,600	17,187	31	8,229	129	62,064	(*f*)	....

Year.	Iron.						Manganese Ore.		Metals, Other		Naphtha.			
	Castings.		Pig.		All Other.						Crude.		Residuum.	
1891..	563	$74,205	247	$6,880	4,783	$223,992	(*f*)	....	175	$18,564	9,568	$76,772	51,872	$409,720
1892..	481	52,253	234	6,840	5,189	262,647	129,016	$1,512,538	(*f*)	....	4,866	12,745	41.759	306,944
1893..	822	135,281	294	6,028	5,497	212,173	125,167	1,251,896	247	86,889	9,574	22,340	53,254	322,590
1894..	296	80,070	192	7,040	2,312	117,207	146,840	1,194,065	202	80,808	9,266	22,856	54,658	408,076
1895..	430	89,011	184	7,950	4,534	239,499	165,600	1,215,399	127	12,150	33.348	220,640	54,451	449,876

Year.	Oil, Kerosene, Benzine, etc.		Ores of Metals and Minerals, Except Graphite.		Paraffine.		Phosphorites.		Platinum, Crude.		Precious Metals.	
1891..	989,206	$9,676,068	63,206	$738,751	*b*1	$88	6,834	$91,269	3	$381,900	(*g*)	....
1892..	790,007	8,416,610	66	1,189	(*f*)	....	7,629	109,558	6	447.665	(*g*)	....
1893..	819,485	6,778,882	1,188	19,558	(*f*)	....	8,892	28,800	2	270,190	(*g*)	....
1894..	709,406	5,642,097	432	10,260	*b*1	870	10,916	134,886	(*f*)	....	(*f*)	$17,688,935
1895..	845,751	8,129,730	20,696	40,071	*b*98	3,746	8,840	107,898	4.7	777,900	(*f*)	550,000

Year.	Quicksilver.		Salt.		Silver—Kg.		Slags.		Steel.		Zinc.			
											Ore.		Ingot and Sheet.	
1891..	218	$380,597	7,216	$32,116	125,694	$2,140,998	2,478	$4,278	212	$18,065	184	$1,866	45.0	$4,285
1892..	266	368,317	9,774	34,484	108,087	1.754,856	3,967	12,745	760	59,534	248	3,708	248.0	1,219
1893..	132	158,111	6,457	21,817	167,010	2,858,582	3,994	15,776	283	24,022	40	1,414	27.0	2.963
1894..	140	164,398	7,028	17.790	(*e*)	....	5,173	11,334	167	14,855	208	2,880	1.0	446
1895..	430	368.629	6,814	16,461	(*e*)	....	5,606	11,274	173	15,338	194	4,390	3.5	264

(*a*) From the Russian official report "Sbornik Statisticheskekh Svedenie o Gornozavodskoi Promyshlennostye Rossie v Zavodskom Godu," St. Petersburg. (*b*) Includes vaseline. (*c*) Included under paraffine. (*d*) Includes platinum manufactures. (*e*) Included under precious metals. (*f*) Not reported. (*g*) Reported under gold and silver.

SPAIN.

The official statistics of mineral production, imports and exports, are summarized in the following tables:

MINERAL PRODUCTION OF SPAIN. (*a*) (IN METRIC TONS AND DOLLARS; $1 — 5 pesetas.)

Year.	Aluminous Earths.		Anthracite.		Antimony Ore.		Arsenical Pyrites.		Asphalt Rock.		Clay.		Coal.	
1892....	445	$2,225	(*d*)	......	395	$12,467	10	$20	508	$1,051	132	$264	1,611,761	$3,835,676
1893....	650	3,250	(*d*)	......	88	2,784	160	324	820	1,280	60	30	1,484,794	2,280,720
1894....	310	1,549	(*d*)	......	15	300	68	186	985	2,009	(*d*)	......	1,659,274	2,327,677
1895....	240	1,198	10	$10	44	700	(*d*)	......	790	1,581	(*d*)	......	1,739,075	2,648,367
1896....	320	1,600	14,895	26,788	54	1,385	(*d*)	......	1,117	2,234	(*d*)	......	1,852,947	2,806,654

Year.	Cobalt Ore.		Fluorspar.		Copper Ore.						Gold and Silver Ore.		Graphite.	
					Argentiferous.		Pyrites.		Copper and Cobalt.					
1892....	......	....	2	$36	(*d*)	....	2,731,593	$13,111,649	2,086	$50,064	(*d*)	....	34	$249
1893....	18	$194	56	272	15,219	$27,901	2,144,908	2,151,608	1,116	26,784	(*d*)	....	*Nil.*	......
1894....	52	624	18	230	(*d*)	....	2,445,242	2,638,819	853	20,472	(*d*)	....	10	30
1895....	7	84	27	405	(*d*)	....	2,701,661	2,829,422	410	6,560	918	$4,593	(*d*)	......
1896....	18	1,800	3	45	(*d*)	....	2,358,284	2,352,488	992	23,808	854	3,056	(*d*)	......

Year.	Iron Ore.				Iron Pyrites.		Kaolin. (China Clay.)		Lead Ore.			
	Non-Argentiferous.		Argentiferous.						Non-Argentiferous		Argentiferous.	
1892....	5,236,275	$6,283,531	(*d*)	......	232,162	$754,993	500	$5,000	215,906	$5,613,558	192,517	$5,832,518
1893....	5.419.071	4,056,546	873	$873	220,000	110,000	1,502	5,397	169,707	3,263,648	179,458	4,139,689
1894....	5,352,353	3,995,912	736	826	60,000	30,000	247	1,896	140,841	2,208,839	181,715	5,497,816
1895....	5.514,339	4,183,059	572	572	60,267	30,335	836	1,579	124,195	2,052,312	181,433	5,042,228
1896....	6,762,582	5,013,404	3,581	3,581	100,000	50,000	1,240	2,446	104,160	1,884,807	182,565	6,121,173

Year.	Lignite.		Manganese Ore.		Mineral Waters.		Nickel and Cobalt Ore.		Nickel Ore.		Ocher.	
1892....	*b*32,870	$41,127	16,910	$136,171	(*d*)	$24,039	88	$1,250	(*d*)	....	20	$117
1893....	35,315	41,967	1,460	7,666	7,162	7,636	37.5	801	81	$917	1,030	710
1894....	48,460	63,266	340	522	169,107	65.882	(*d*)	....	7.2	144	120	240
1895....	44,708	58,333	10,162	17.043	15,198,865	75.538	(*d*)	....	(*d*)	....	203	787
1896....	55,413	60,261	38,265	53,732	15,738,142	92,485	(*d*)	....	100	890	212	850

Year.	Phosphorites.		Quicksilver Ore.		Salt.		Silver Ore.		Steatite.		Sulphate of Barium.	
1892......	2,150	$3,152	35,025	$1,755,738	682,684	$2,596,741	656	$113,543	1,341	$6,576	665	$4,658
1893......	211	415	34.309	1,618,187	151,464	85.052	4,825	257,041	4.010	18,705	643	2.943
1894......	40	80	30.031	1,200.069	186,121	228.374	7,411	257.041	3,108	13,603	541	2.699
1895......	1,040	2,081	33,792	1,248,815	326,820	952,098	16,299	75.836	2,347	6,219	494	2,255
1896......	770	3,080	34,959	1,377,396	521,751	1,153,880	1,230	129,943	756	1,166	345	1,720

Year.	Sulphate of Soda.		Sulphur, Crude Rock.		Tin Ore.		Topaz of Hinojosa. Kg.		Wolfram Ore		Zinc Ore.	
1892	350	$1,540	26,330	$68,458	244	$42,347	280	$3,178	26	$1,325	74,265	$530,535
1893	180	270	24,793	59,830	34	3,611	81	1,874	19	975	62,616	387,101
1894	312	468	10,865	28,248	26	2,678	75	1,549	21	1,070	58,760	395,790
1895	460	690	8,481	22,049	17	1,500	67	1,385	14	710	54,109	370,007
1896	(*d*)	....	26,204	45,433	2,348	5,908	80	12,860	31	1,560	64,828	407,670

(*a*) Figures for 1892 and 1893 are from the *Reports of the Comision Ejecutiva de Estadistica Minera*. The figures for 1894, 1895. and 1896 are from the official *Reports of the Junta Superior Facultativa de Minas*, Madrid. There was also produced in 1893: Bournonite, 55 metric tons, $275; refractory sand, 480 tons, $960; silica, 20 tons, $20. (*b*) Fiscal year 1891–92, ending July 1. (*d*) Not reported.

METALLURGICAL PRODUCTION OF SPAIN. (*a*) (IN METRIC TONS AND DOLLARS; $1—5 pesetas.)

Year.	Arsenic Sulphide.		Asphalt, Refined.		Briquettes.		Cement, Hydraulic.		Coke.	
1892	73	$4,170	845	$10,985	71,848	....	114,428	$296,598	282,801	(*c*)
1893	129	8,262	580	7,540	273,118	$1,117,672	140,314	356,071	116,992	$325,873
1894	184	13,224	905	11,761	209,776	852,281	132,645	376,204	149,905	748,028
1895	184	18,890	790	10,275	342,985	1,870,987	149,197	324,214	249,058	1,046,033
1896	271	27,100	1,285	16,705	343,482	1,873,061	130,738	281,144	288,523	1,202,716

Year.	Copper.						Iron, Pig.		Iron, Forged.	
	Fine.		In Matte.		In Precipitate.					
1892	18	....	16,385	....	29,026	....	109,891	(*c*)	73,389	(*c*)
1893	106	$21,184	18,899	$1,175,956	26,404	$3,696,628	134,563	1,878,728	58,923	$2,441,290
1894	785	156,947	16,872	1,012,295	29,548	4,136,687	123,798	1,699,682	54,214	2,209,878
1895	7	1,520	5,756	345,385	31,725	4,439,889	179,752	2,575,065	48,462	2,053,822
1896	6	1,200	16,378	982,702	29,873	4,155,204	100,786	1,481,162	53,798	2,224,443

Year.	Steel.		Lead.				Quicksilver.		Silver—Kg.	
			Non-Argentiferous.		Argentiferous.					
1892	55,417	(*c*)	*b*125,550	$6,981,048	93,710	$7,297,619	1,657	$1,607,579	72,000	$2,339,817
1893	76,583	$3,048,669	77,456	8,886,660	91,832	7,138,834	1,666	1,394,630	63,605	1,774,671
1894	92,854	3,584,400	64,189	2,910,453	88,433	7,385,797	1,610	1,286,961	192,745	4,195,184
1895	56,801	2,189,222	76,808	3,637,932	83,978	6,916,820	1,506	1,348,417	58,546	1,360,996
1896	68,126	2,666,843	82,215	4,386,544	84,802	5,808,813	1.524	1,287,144	64,554	1,507,441

Year.	Sulphate of Soda.		Sulphur.		Zinc.					
					Slabs.		Sheet.		Calamine, Calcined.	
1892	206	$2,204	7,822	$132,982	3,152	(*c*)	2,756	(*c*)	28,118	*d* $1,211,304
1893	247	3.681	4,686	82.600	3,290	$405,612	2,462	$433,418	21,548	13,963
1894	174	3,059	8,417	58,086	3,052	360,276	2,421	421,354	17,768	11.514
1895	227	2,946	2,231	37,930	3,149	302,266	2,487	373,125	19,169	(*c*)
1896	(*c*)	....	1,800	36,004	3,485	390,286	2,648	405,175	23,108	(*c*)

(*a*) The figures for 1892 and 1893. except those for briquettes, copper, coke, iron, steel, and zinc, are from the *Reports of the Comision Ejecutiva de Estadistica Minera;* all others are from the official *Reports of the Junta Superior Facultativa de Minas*. (*b*) Contains 99 tons antimonial lead, value $5,963. (*c*) Not reported. (*d*) Total value for ingots, sheet, and ore.

MINERAL IMPORTS OF SPAIN. (*a*) (IN METRIC TONS AND DOLLARS; $1—5 pesetas.)

Year.	Asphalt and Pitch.		Alkaline Carbonates		Coal.		Coke.		Gold Bars—Kg.	
1893	33,608	$672,164	25,649	$1,128,571	1,484,097	$8,014,112	268,198	$1,410,045	2,203	$1,165,960
1894	29,967	599,335	28,372	1,248,390	1,614,839	8,720,129	225,902	1,219,873	......	....
1895	33,766	675,316	27,591	1,219,755	1,515,506	8,190,270	255,048	1,377,232	......	....
1896	35,401	566,427	27,014	1,188,641	1,447,345	8,262,168	284,083	1,115,516	337	235,900
1897	23,324	368,700	28,428	1,210,426	1,633,333	8,837,595	214,763	1,159,781	268	187,600

Year.	Gold Coin	Iron, Pig.		Iron, Bar.		Iron and Steel, Forged.		Petroleum, Crude.		Silver Bars. Kg.	
1893........	$1,008	23,348	$828,784	6,970	$343,302	15,148	$717,841	54,942	$1,977,925	394	$14,184
1894........	634,394	25,303	354,240	9,648	419,706	23,142	969,009	44,052	1,145,362	1,935	54,181
1895........	119,945	12,385	173,389	7,768	354,289	18,233	753,267	46,592	1,211,397	4,286	120,008
1896........	16,231	8,577	120,087	13,861	607,539	26,463	1,398,827	34,427	1,233,345	5,576	150,812
1897........	12,149	1,855	25,972	13,558	571,043	24,037	1,472,690	34,972	1,259,011	243,540	6,341,894

Year.	Silver Coin.	Soda Nitrate.		Sulphur.		Tin Plate.		Tin Ingots.	
1893........	$3,827,300	18,998	$1,139,923	6,330	$162,186	2,996	$268,794	1,004	$395,362
1894........	4,345,859	24,110	1,446,690	5,668	1,248,390	3,149	264,543	1,027	472,695
1895........	4,776,929	26,385	1,583,129	6,813	1,219,755	1,241	104,223	825	379,625
1896........	20,190,400	26,841	1,610,495	7,744	185,870	1,071	89,977	1,080	432,001
1897	22,325,312	34,862	2,091,729	5,310	128,883	565	46,098	923	363,359

(*a*) The figures for 1893, 1894, and 1895 are from the *Anuario de la Mineria Metalurgia y Electricidad de Espana*, while those for the years 1896 and 1897 are from the *Revista Minera*, Madrid, Feb. 18, 1898.

MINERAL EXPORTS OF SPAIN. (*a*) (*b*) (IN METRIC TONS AND DOLLARS; $1 = 5 pesetas.)

Year.	Antimony Ore.		Coal.		Copper Ore.		Iron Ore.		Iron Pyrites.	
1892........	307	$18,423	14,521	$78,411	511,115	$3,884,478	4,799,648	$8,639,266	443,026	$886,052
1893........	84	5,097	8,347	41,736	574,590	5,171,317	4,783,120	8,613,216	399,720	799,440
1894........	46	2,728	16,738	80,341	541,821	4,871,887	4,975,727	8,956,309	510,129	1,020,257
1895........	26	1,566	8,320	44,927	530,075	4,796,835	5,175,260	9,315,468	490,709	981,419
1896........	119	7,190	4,295	23,205	629,546	5,665,918	6,289,257	11,320,670	464,882	920,977
1897........	20	1,176	2,539	13,300	822,570	5,613,482	6,884,244	13,160,064	217,545	569,287

Year.	Lead Ore.				Manganese Ore.		Phosphorites.		Salt.		Silver—Coin, Jewelry, etc.	
	Argentiferous.		Non-Argentiferous.									
1892........	13,189	$1,184,274	2,169	$101,905	10,410	$97,854	1,740	$3,480	231,912	$695,787	239	$8,588,844
1893........	11,706	1,006,788	995	47,101	6,718	63,150	(*c*)	....	202,769	608,107	89	2,445,169
1894........	11,457	985,345	707	35,827	7,821	68,815	(*c*)	....	228,691	686,071	22	715,938
1895........	8,349	534,852	1,979	94,516	30,007	282,269	(*c*)	....	253,391	760,174	277	8,397,770
1896........	*d*6,270	392,668	(*c*)	....	87,835	827,620	(*c*)	....	254,752	764,257	(*c*)	....
1897........	*d*8,267	462,595	(*c*)	....	95,756	1,091,621	(*c*)	....	235,871	707,616	(*c*)	....

Year.	Steatite.		Sulphur.		Zinc Ore.		Cement, Hydraulic		Copper, in Matte and Precipitate.	
1892........	16	$649	284	$7,385	39,574	$261,192	2,149	$12,900	67,705	$4,195,221
1893........	526	21,050	717	18,651	32,357	213,544	2,175	13,055	57,961	4,768,135
1894........	825	13,000	244	6,345	34,119	337,721	2,409	14,451	32,061	3,496,283
1895........	1,415	45,272	83	2,152	29,360	267,957	2,807	16,841	36,210	4,218,024
1896........	(*c*)	....	(*c*)	....	36,656	308,272	(*c*)	....	46,417	4,385,213
1897........	(*c*)	....	(*c*)	....	41,040	353,121	(*c*)	....	51,487	7,373,928

Year.	Iron and Steel.		Lead.				Quicksilver.		Tin.		Zinc.	
			Argentiferous.		Non-Argentiferous.							
1892........	51,976	$1,152,324	75,313	$6,025,068	79,657	$4,494,857	1,644	$1,840,938	5	$2,401	2,162	$216,185
1893........	46,372	863,208	86,080	6,886,401	72,657	4,102,058	1,559	1,746,867	29	14,669	2,499	249,985
1894........	57,257	1,590,853	91,511	5,490,639	68,806	3,467,557	870	974,117	16	7,756	2,680	267,997
1895........	79,157	3,654,863	87,299	5,587,115	67,187	3,238,438	1,330	1,489,194	10	4,987	1,367	136,690
1896........	23,085	233,270	*d*166,124	9,500,985	(*c*)	....	1,559	1,746,154	(*c*)	....	3,560	356,060
1897........	43,612	610,776	*d*171,774	10,122,220	(*c*)	....	1,742	1,436,293	(*c*)	....	2,170	239,716

(*a*) From the *Estadistica Minera de España*, except 1896 and 1897, which are from the *Anuario de la Mineria, Metalurgia y Electricidad de España*, Madrid, 1897. (*b*) Other exports: Copper matte in 1892, 30,222 tons, $350,591; in 1893, 28,130 tons, $286,302; gold bullion and coin in 1892, $95,386; in 1893, $114,298. (*c*) Not reported. (*d*) Includes non-argentiferous lead ore or lead.

SWEDEN.

The most important article of mineral production in Sweden is iron ore, from which a metal of high reputation is made. Details of the iron industry in Sweden in 1897 will be found under the caption "Iron and Steel." Of other metalliferous deposits the most important are the copper mines of Falun and the zinc mines of Ammeberg, which in 1896 produced 16,332 metric tons of zinc ore and 572 tons of silver-lead ore. Of silver-lead mines the most important are the ancient mines of Sala where argentiferous galena occurs in lenticular masses in limestone. These mines produced 4,745 metric tons in 1896.

MINERAL PRODUCTION OF SWEDEN. (*a*) (IN METRIC TONS.)

Year.	Alum	Coal.	Cobalt Ore	Copper Ore.	Fire-clay.	Gold Ore.	Iron Ore.	Iron Ore (Bog)	Iron Pyrites	Manganese Ore.	Plumbago.	Red Ocher	Silver and Lead Ore.	Zinc Ore.
1892	356	199,380	53	24,069	128,096	3,463	1,293,583	1,650	1,249	7,832	15	1,090	19,808	54,961
1893	357	199,983	101	22,083	138,469	2,441	1,483,762	2,275	480	7,061	49	1,371	21,048	46,623
1894	261	195,950	....	25,710	129,617	.....	1,927 212	689	656	3,359	107	1,564	14,825	47,029
1895	286	223,652	....	26,009	120,385	459	1,904,662	2,691	221	3,117	7	1,291	12,045	31,349
1896	334	225,848	....	24,351	120,426	736	2,039,019	925	1,009	2,056	14	......	15,381	44,041

Year.	Brass.	Cobalt Oxi. Kg.	Copper.	Copperas.	Copper, Sulphate	Gold. Kg.	Iron.			Steel.			Lead. (*b*)	Silver. Kg.	Sulphur.
							Pig.	Bloom.	Bar.	Bessemer.	Martin	Crucible.			
1892	302	7,138	745	476	580	87.626	485,664	235,426	278,510	82,422	76,556	617	801	5,211	46
1893	...	3,298	544	454	659	93.876	453,421	225,532	266,727	84,398	81,889	558	472	4,464	73
1894	...	1,580	350	362	723	93.603	462,809	204,517	267,049	83,322	84,003	510	330	2,870	36
1895	...	......	216	94	1,195	85.291	462,920	188,726	294,135	97,320	99,259	598	1,256	1,188	..
1896	...	......	249	191	1,506	114.529	494,418	188,396	298,788	114,120	142,301	604	1,530	2,082	77

(*a*) From *Bidrag till Sveriges Officiela Statistik, Bergshandteringen.* In 1892 there was also an output of 16 tons of cement copper; hammered copper, 314 tons; brass, 302 tons; powdered manganese, 172 tons, and 0.1 ton of molybdenum ore; in 1893, 0.1 ton of molybdenum ore; in 1894, 0.03 ton of antimony ore, and in 1895, 1.5 tons of antimony ore. (*b*) In 1892, included antimonial lead, 8 tons; litharge, 3 tons; in 1893, antimonial lead, 22 tons; litharge, 10 tons.

MINERAL IMPORTS OF SWEDEN. (*a*) (IN METRIC TONS AND DOLLARS; 1 krone = 27 cents.)

Year.	Alabaster (*b*)		Alum.		Aluminum Sulphate.		Ammonia, Caustic. (*c*)		Ammonium.							
									Carbonate. (*c*)		Chloride.		Nitrate. (*c*)		Sulphate. (*c*)	
1891	0.248	$335	83.785	$2,432	731	$7,894	(*q*)	......	(*q*)	....	49.257	$10,640	(*q*)	.....	(*q*)	......
1892	0.358	483	112.190	2,953	648	8,748	24.013	$1,945	25.866	$5,587	50.940	11,003	0.024	$10	37.525	$3,040
1893	0.348	470	87.598	2,306	288	3,886	42.082	3,409	49.197	10,627	64.510	13,934	0.103	42	98.369	7,968
1894	0.555	749	89.572	2,660	266	3,590	63.515	5,145	64.875	14,013	56.620	12,230	0.158	64	265.239	21,484
1895	0.567	765	92.910	2,760	348	4,704	75.891	6,147	74.282	16,045	84.171	18,181	10.514	4,258	38.673	3,133

Year.	Antimony, Crude.		Arsenious Acid.		Asbestos. (*e*)		Asphalt. (*f*)		Barytes.		Boracic Acid. (*g*)		Borax. (*g*)	
1891....	57.091	$10,700	*d*29.511	$3,187	(*q*)	....	2,382	$38,583	128	$6,641	101.107	$16,925	(*q*)	......
1892....	58.098	10,981	21.828	2,303	12.960	$3,505	1,981	32,800	176	9,483	80.079	19,610	47.916	$7,508
1893....	40.996	7,748	18.061	1,953	51.784	13,982	1,967	21,241	201	10,856	34.176	6,367	106.496	16,677
1894....	60.480	11,431	24.108	2,604	68.085	18,383	2,633	28,436	172	9,318	63.692	10,318	107.890	14,561
1895....	80.608	15,234	36.202	3,910	67.697	18,278	3,256	35,161	240	12,989	53.541	8,674	111.099	14,999

Year.	Bromine and Bromides of Potassium and Sodium. (*h*)		Cement.		Chalk.				Chemico-Technical Preparations N.E.S. (*j*)	Chloride of Lime.		Clay.
					White—Unground. Hectoliters.		Other Kinds. (*i*)					
1891....	(*q*)	....	896	$11,123	3,448	$1,862	75.340	$1,607	$152,920	1,128	$48,709	$59,894
1892....	1.542	$1,249	720	8,940	2,788	1,129	65.981	1,102	109,545	1,084	48,884	61,138
1893....	2.967	2,419	852	9,434	1,970	798	124.227	1,790	63,204	1,072	49,212	48,434
1894....	3.977	3,221	2.425	22,919	2,254	244	100.357	862	64,261	1,102	47,603	68,844
1895....	3.999	3,239	4,270	40,354	4,466	482	108.898	1,579	69,962	1,250	58,982	69,178

Year.	Coal—Hectoliters. (*k*)		Coin.		Earths. (*l*)		Emery.		Glass and Glassware. (*m*)		Glauber Salt. (*n*)		Gold—Kg.	
			Gold.	Silver.										
1891....	19,511,628	$7,902,209	$3,513	$245,866	10.110	$1,638	80.658	$10,889	2,663	$474,284	2,471	$66,716	54	$36,013
1892....	19,665,304	6,637,040	1,068	156,699	249.388	7,394	87.556	11,820	1,614	411,463	3,501	94,540	47	31,344
1893....	19,396,808	4,546,423	617	102,656	299.938	8,098	75.100	10,139	1,451	376,570	3,774	101,897	71	47,350
1894....	24,148,786	8,802,232	530,923	14,803	114.081	3,080	70.688	9,543	1,427	411,182	4,642	125.340	1,633	1,089,048
1895....	23,895,370	8,387,275	11,606	114,340	161.572	4,362	124.623	16,824	1,619	452,276	7,420	200,332	89	59,354

Year.	Gypsum. (*o*)		Iron and Steel.			Lead.		Lime. Hectoliters. (*p*)		Litharge.		Nitric Acid.	
			Crude.		Manufactures.								
1891....	2,953	$22,351	36,038	$1,131,210	$2,665,144	1,544	$174,602	5,518	$2,848	47.656	$6,434	31.207	$5.055
1892....	3,027	21,209	40,167	1,085,379	3,166,971	1,162	118,242	4,398	2,174	65.802	8,816	22.818	2,156
1893....	3.812	23.479	27,005	900,920	3,252,817	1,498	134,896	5,587	2,768	80.681	10.892	22.174	2,095
1894....	3,578	27,655	34,201	734,304	2,616,178	1,750	163,197	6,000	2.155	93.412	12,611	26.038	2,109
1895....	4,112	30,347	40,582	878,005	2,549,183	1,624	149,729	4,436	1,628	116.737	15,760	36.208	2,983

Year.	Phosphorus.		Platinum. Kg.		Plumbago.		Porcelain.		Potash.		Potassium.			
											Chloride.		Cyanide.	
1891....	85.847	$81,196	1	$127	113.796	$2,151	585	$233,520	1,472	$149.227	(*q*)	....	(*q*)	......
1892....	169.622	206,091	15	2.835	117.625	2,223	413	227.859	2,384	390,653	(*q*)	....	(*q*)	......
1893....	61.753	75,030	6	1,134	118.859	2,246	218	166,051	1.858	175,563	90.970	$12,281	1.101	$892
1894....	56.658	68.839	14	2,646	132.884	7,173	235	175,379	1,744	164,835	300.701	40,595	1.815	1,065
1895....	71.407	86,760	42	7,938	134.154	7,244	277	211,033	1,979	187,019	561.477	113,099	1.457	1,180

Year.	Quicksilver.		Salt.				Saltpeter. (*r*)		Sand.	Silver—Kg.		Soda, Caustic. (*s*)	
			Common. Hectoliters.		Refined.								
1891....	3.078	$3,491	1,042,290	$402.482	3.645	$148,270	4,491	$363,809	$13,964	1,044	$44.537	12,258	$463,338
1892....	1.468	1,665	984,586	478.509	3,086	125,066	5,955	606,048	14,206	3,209	135.509	4,178	115,089
1893....	3.069	3.480	959,375	446,256	2,144	86,835	5,233	285,789	12,945	3,456	139,968	144	8,146
1894....	5.896	6,686	953,900	386,354	1,922	77,847	8,436	452,700	14,062	2,535	51,834	245	13,222
1895....	6.818	7,166	1,101,242	446,003	2,535	102,685	9,388	446,851	15,440	3,050	65,880	1,043	56,319

Year.	Stone, etc.	Sulphur.		Sulphuric Acid.		Tin.		Tin and Lead Ashes.		Tin Salts.		Tiles, All Kinds.	Vitriol, All Kinds.	Zinc.	
1891....	$75.353	4,530	$164.873	896	$29,044	251	$121,109	10.923	$13,861	5.158	$2,646	$72,869	$26,301	1,959	$251,904
1892....	83.793	7.416	240,284	707	20,034	280	133,983	2.703	2,919	2.974	1,204	76,391	16,669	1.980	258,891
1893....	80,700	8,876	215,690	420	10,209	355	155,264	3.034	3,277	3.944	1,597	59,013	5,263	1,821	181,517
1894....	36.601	8,142	197,850	418	8,472	413	161,582	3.088	3,335	3 982	1,075	105,233	12,212	1,783	165.582
1895....	35,363	7,140	173,491	772	15,638	462	162,085	6.699	7,235	4.091	1,105	117,188	4,554	2,216	196,289

(*a*) From *Bidrag till Sveriges Officiela Statistik, Utrikes Handel och Sjöfort.* (*b*) Cut. (*c*) Prior to June 21, 1892, included under "Chemico-Technical Preparations." (*d*) Arsenic only. (*e*) Worked and unworked; not reported until after June 21, 1892. (*f*) Native and artificial. (*g*) The classification "Boracic Acid" includes

MINERAL EXPORTS OF SWEDEN. (a) (IN METRIC TONS AND DOLLARS; 1 krone = 27 cents.)

Year.	Alum.		Aluminum Sulphate. Kg.		Ammonium Sulphate.		Antimony, Crude.		Asbestos. Kg.		Cement.		Chalk.			
													Unground. Hectoliters.		All Other.	
1892....	64	$2,078	1,620	$22	.....	....	.....	......	......	......	25,128	$271,382	23,379	$9,469	4,644	$37,661
1893....	82	2,447	(b)	...	10	$810	2.3	$427	870	$100	41,399	391,225	194	78	4,254	34,461
1894....	77	2,294	10,000	135	41	3,343	1.2	230	14,032	3,789	29,896	242,161	244	26	3,355	18,188
1895....	38	1,140	(b)	....	(b)	....	2.3	440	28	7	31,029	251,333	111	12	3,453	18,815
1896....	40	1,184	(b)	....	100	8,188	0.8	144	2,040	551	22,991	186,228	164	18	4,382	23,747

Year.	Chemico-Technical Preparations.	Clay.	Coal.		Copper Ore.		Copper and Alloys, and Metals Not Specified.		Earths Not Specified.		Glass, All Kinds.		Gypsum and Manufactures.	
1892....	49.059	$15,404	34.5	$146	162.2	$3,066	717.9	$189,785	11.9	$323	6,010	$698,688	55.5	$42,416
1893....	56,717	12,337	36.9	156	203.6	3,848	437.2	118,279	10,657.0	287,750	7,045	606,016	11.9	4,258
1894....	40,627	17,360	33.7	153	(b)	....	407.2	123,663	2,661.0	7,186	7,441	1,181,823	27.2	21.308
1895....	39,667	17,360	51.9	182	(b)	....	2,288.0	269.066	847.0	2,288	7,150	1,221,310	20.0	12,260
1896....	34,532	28,869	140.8	594	1,094.0	73,856	1,911.0	218,849	1,059.0	2,859	10,674	1,378,125	9.3	7,436

Year.	Iron Ore.		Iron and Steel.			Lead and Manufactures.		Lime. Hectoliters.		Minerals, Not Specified.	
			Unwrought.		Manufactures.						
1892....	320,071	$864,198	285,805	$8,556.801	$1,058,289	194.2	$11,677	34,708	$14.148	140.6	$1,898
1893....	484,055	1,306,949	267,052	7,568,225	956,785	1,005.2	57,948	24,218	11,933	52.5	708
1894....	831,395	1,571,337	252,452	7,009,253	1,342,845	768.2	42.158	34,172	11,444	719.4	9.712
1895....	800,452	1,512,855	311,866	8,653,212	1,794,270	1,379.6	74,712	40.287	13,456	211.6	1,714
1896....	1,150,695	1,905,550	304,138	9,320,969	1,975,068	1,182.2	67,750	102,787	29,453	2,708.9	43,766

Year.	Other Ores.		Peat.		Phosphorus. Kg.		Plumbago. Kg.		Potassium Chlorate.		Salt, Refined. Kg.		Sand.
1892....	8,785	$142,316	829.7	$2,240	1,150	$1,397	2,406	$45	26.2	$8,500	408	$16	$1,348
1893....	6,310	102,218	1,698.6	4,586	1,225	1,489	2,043	38	13.3	5,014	145,183	5,880	514
1894....	5,104	80,741	1,411.1	3,810	1,585	1,926	4,336	234	72.3	19,522	1,781	73	619
1895....	5,419	86,077	1,143.2	3,087	885	1,075	9,749	526	436.4	88,377	1,661	67	511
1896....	2,704	43,766	1,451.8	3,920	1,510	6,795	3,500	189	253.7	47,958	830	34	2,232

Year.	Silver.					Soda, Caustic.		Sodium Sulphide.		Stone, Worked.			
	Coin.	Bullion—Kg.		Manufactures.						Polished.		Other Kinds	Not Specified
1892....	$58,347	1,317	$197,559	20	$1,080	1,491	$28,186	25.8	684	69.2	$3,735	$1,042,462	$249,963
1893....	(b)	3,981	161,230	25	1,350	823	15,546	9.3	251	88.3	2,070	1,094.885	210.385
1894....	(b)	2,579	52,225	6	324	872	16,478	10.8	279	14.5	785	1,220.787	202.717
1895....	194	751	15,918	10	540	(b)	....	12.9	348	8.3	446	1,208,196	211.866
1896....	(b)	819	17,859	14	756	(b)	....	6.8	184	(b)	....	(b)	249,516

Year.	Sulphur.		Sulphuric Acid.		Tin and Lead Ash.		Tin.				Vitriol.		Zinc.			
							Ingot.		Manufactures.				Ore.		Manufactures.	
1892....	4.9	1$57	2.4	$78	32.6	$35,255	7.9	$3,781	93	$50	570	$23,086	29,482	$398,611	62	$8,557
1893....	11.6	281	2.7	88	9.9	10,679	10.6	4,632	572	329	(b)	43,201	26,772	361.425	117	10,308
1894....	16.1	391	2.6	77	1.8	1,982	18.4	7,214	800	808	(b)	44,876	24,822	335,096	117	7,341
1895....	11.2	271	3.1	85	7.6	8,245	13.3	4,683	786	459	(b)	90,501	33,075	312,582	26	3,130
1896....	8.8	214	6.6	178	7.6	8,197	18.9	6,367	2,996	1,636	(b)	121,524	41,401	458,306	184	11,789

(a) From *Bidrag til Sveriges Officiela Statistik*, Utrikes Handel. (b) Not stated in the reports.

---

borax prior to June 21, 1892. (h) Prior to June 21, 1892, included under "Apothecaries' Materials," and not stated in this table. (i) Includes white-ground, red, black, and pastels. (j) N. E. S. indicates *not elsewhere specified*. (k) Includes coal-dust. (l) Until June 21, 1892, includes polishing earth only. In 1891 there were imported 9,564 kg. bole, value $387, and tripoli 1,068 kg., value $72. (m) Exclusive of powdered glass after June 21, 1892. (n) After June 21, 1892, includes bi-sulphate of soda. (o) Includes gypsum rock, burnt and ground gypsum. (p) Includes slaked and unslaked. (q) Not reported. (r) Includes Chile saltpeter and potash-niter; in 1891, Chile saltpeter only. (s) Prior to June 21, 1892, included carbonate of soda.

TURKEY.

THERE are no official statistics of mineral production in Turkey but the most important substances, namely, chrome and manganese ores, emery, pandermite and borax, antimony, copper, zinc, silver and lead ores, are exported. Consequently the exports as reported in the subjoined table practically represent the mineral production of those substances in the Turkish Empire. The fiscal year 1896–97 corresponds to the year 1312 in the Turkish notation.

The Anyhana copper mines, situated at the headwaters of the Tigris River in Asia Minor, are operated by the government, which also works the silver-lead mines at Bulgarclagh. The latter yield 1,500 kg. of fine silver per annum. The only coal mines of importance are in the basin of Heraclea on the coast of the Black Sea. The production amounts to about 150,000 metric tons per annum, and is almost exclusively consumed by the Turkish navy. The meerschaum mines at Eskishehir, a station on the Angora Railway, are owned by the government. They formerly produced about 240 metric tons per annum, but the output has declined to about one-half since the best pits have been flooded. The most important private mines are the silver-lead mines of Hodshah Gurnish, near Edremid, which produce about 4,000 tons per annum, and those at Lidshesi, producing about 3,000 tons. The production of salt, which is a State monopoly, aggregates 231,000 tons.*

MINERAL EXPORTS OF TURKEY. (*a*)

Year.	Antimony Ore.		Arsenic Ore.		Borax.		Chrome Ore.		Copper.		Copper Ore.		Emery.		Lead.	
	Tons.	Kg.	Tons.	Kg.	Tons.	Kg.	Tons.	Kg.	Tons.	Kg.	Tons.	Kg.	Tons.	Kg.	Tons.	Kg.
1892–93..	1,035	.....	....	.....	....	.....	13,780	.....	....	.....	....	.....	8,325	.....	....	.....
1893–94..	1,545	.....	200	.....	....	.....	20,250	.....	....	.....	....	.....	6,034	.....	....	.....
1894–95..	....	.....	308	.....	3,033	856	21,050	.....	....	.....	....	.....	6,591	.....	1,078	373
1895–96..	100	.....	....	.....	2,602	299	20,137	88	....	.....	....	.....	....	.....	1,764	420
1896–97..	400	.....	....	.....	3,412	824	11,551	946	326	665	40	934	300	.....	1,785	398

Year.	Lignite.		Manganese Ore.		Pandermite.		Silver-Lead Ore.		Sulphur.		Tremolite. (*b*)		Zinc Ore.	
	Tons.	Kg.	Tons.	Kg.	Tons.	Kg.	Tons.	Kg.	Tons.	Kg.	Tons.	Kg.	Tons.	Kg.
1892–93..	1,087	......	2,900	......	11,622	638	5,700	903	....	......	....	......	100	......
1893–94..	2,118	918	2,225	......	9,100	659	5,636	664	....	......	....	......	....	......
1894–95..	1,836	523	8,400	......	9,081	314	5,912	939	300	......	....	......	112	......
1895–96..	2,418	921	33,500	......	12,626	463	5,804	413	....	......	145	536	....	......
1896–97..	9,525	535	49,000	......	11,375	633	3,608	482	....	......	423	93	1,309	884

(*a*) Table specially furnished by His Excellency, Selim Melhamé, Minister of Agriculture, Mines, and Forestry, through Hon. James B. Angell, United States Minister at Constantinople. (*b*) In the original this substance is reported "calamite;" hornblende asbestos is probably meant.

---

* Communication from the International Patent Bureau of C. F. Reichelt, Berlin.

UNITED KINGDOM.

THE statistics of the mineral production, imports and exports, are given in the subjoined tables. The statistics of the most important substances for 1897 will be found under the respective captions elsewhere in this volume.

MINERAL PRODUCTION OF THE UNITED KINGDOM. (*a*) (METRIC TONS AND DOLLARS; £1 — $5.)

Year.	Alum Shale.		Arsenic.		Arsenical Pyrites.		Barytes.		Bauxite.		Bog Ore. (*b*)	
1892......	2,969	$1,825	5,196	$218,430	4,569	$24,940	27,306	$146,415	7,439	$9,300	15,609	$38,405
1893......	2,149	1,820	6,072	288,470	3,085	14,740	26,635	126,815	8,880	20,750	10,919	13,430
1894......	4,036	2,480	4,878	243,070	3,341	19,115	22,700	107,050	8,097	28,090	7,928	9,755
1895......	2,096	1,290	4,875	260,990	2,998	18,925	21,509	115,295	10,574	12,580	5,742	7,065
1896......	*Nil.*	....	3,674	227,415	8,949	40,085	24,117	127,950	7,365	9,590	6,758	8,315
1897......	621	....	4,232	....	13,847	....	23,086	....	13,449	....	7,238	....

Year.	Chalk.		Chert and Flint		Clay. (*d*)		Coal.		Copper Ore.	
1892......	(*c*)	....	(*c*)	....	3,153,514	$4,446,875	184,695,461	$330,252,255	6,091	$59,765
1893......	(*c*)	....	(*c*)	....	3,114,251	4,087,095	166,955,008	279,049,040	5,432	64,805
1894......	(*c*)	....	(*c*)	....	3,315,988	4,118,505	191,289,965	313,650,895	5,844	69,545
1895......	2,971,023	$769,320	96,304	$83,805	9,952,828	9,198,035	192,695,944	286,156,065	7,651	109,560
1896......	3,616,177	785,850	109,694	85,150	11,528,250	7,210,345	198,487,049	285,950,735	9,113	107,930
1897......	3,920 183	....	95,209	....	12,908,479	....	215,364,010	....	7,246	....

Year.	Copper Precipitate.		Fluorspar.		Gold Ore.		Gravel and Sand.		Gypsum.		Iron Ore.	
1892......	274	$15,560	174	$940	10,150	$45,840	(*c*)	....	149,900	$291,135	11,498,678	$14,858,160
1893......	234	11,050	218	805	4,561	38,285	(*c*)	....	145,782	296,845	11,382,732	14,139,735
1894......	245	11,565	128	845	6,708	67,865	(*c*)	....	155,905	331,775	12,565,185	15,953,235
1895......	264	14,275	37	270	13,478	82,920	1,030,709	$405,535	180,738	359,175	12,817,261	14,328,545
1896......	201	10,620	400	2,390	2,809	21,285	1,268,310	450,100	196,404	372,690	13,919,976	15,752,120
1897......	224	....	302	......	4,589	....	1,378,546	....	184,287	....	14,008,484	....

Year.	Iron Pyrites.		Jet—Kg.		Lead Ore.		Lignite.		Manganese Ore.		Ocher, Umber, etc.		Oil Shale.	
1892......	14,190	$34,785	421	$925	40,664	$1,482,420	4,315	$5,310	6,175	$22,170	12,325	$63,910	2,123,376	$2,612,430
1893......	16,090	36,460	403	885	41,461	1,402,695	3,316	1,580	1,857	3,810	10,702	69,400	1,987,894	2,445,650
1894......	15,771	40,210	217	240	41,249	1,334,975	339	415	1,838	3,700	8,652	70,200	2,018,167	2,482,990
1895......	9,193	20,570	76	80	39,026	1,366,960	*Nil.*	......	1,293	3,405	7,747	84,945	2,282,815	2,808,580
1896......	10,177	23,015	133	50	41,726	1,516,390	*Nil.*	......	1,097	3,065	10,049	123,440	2,458,237	3,024,405
1897......	10,752	....	(*e*)	......	35,903	....	*Nil.*	......	608	....	14,653	....	2,259,325	....

Year.	Petroleum.		Phosphate of Lime.		Plumbago.		Quartz.		Salt.		Slag.	
1892......	221	$2,045	12,395	$111,250	*Nil.*	....	(*e*)	....	1,987,828	$4,307,005	(*e*)	....
1893......	264	2,440	3,353	28,855	*Nil.*	....	(*e*)	....	1,954,813	3,676,110	(*e*)	....
1894......	50	460	711	6,385	*Nil.*	....	(*e*)	....	2,271,687	3,818,145	(*e*)	....
1895......	15	140	2,540	21,875	41	$500	736	$2,750	2,208,025	3,548,755	187,040	$29,440
1896......	12	145	3,048	26,250	*Nil.*	....	527	1,945	2,054,715	3,333,065	571,290	76,790
1897......	12	....	2,032	....	*Nil.*	....	(*e*)	....	1,933,949	....	(*e*)	....

Year.	Slates and Slabs.		Stone. Granite.		Stone. Limestone.		Stone. Sandstone.		Stone. Whinstone, Basalt, etc.	
1892......	424,983	$5,129,610	(*c*)	....	(*c*)	....	(*c*)	....	(*c*)	....
1893......	446,017	5,538,130	(*c*)	....	(*c*)	....	(*c*)	....	(*c*)	....
1894......	460,060	5,856,830	(*c*)	....	(*c*)	....	(*c*)	....	(*c*)	....
1895......	591,068	6,870,730	1,694,450	$2,739,995	*f* 9,677,440	$6,026,805	4,299,714	$6,832,980	1,756,004	$1,761,910
1896......	596,824	6,691,280	1,784,925	2,490,870	*f* 11,187,532	6,078,020	4,579,869	7,089,925	2,828,591	2,127,985
1897......	623,708	....	1,876,880	....	*f* 11,042,971	....	5,169,310	....	(*e*)	....

Year.	Strontium Sulphate.		Tin Ore (Black Tin).		Uranium Ore.		Wolfram Ore.		Zinc Ore.	
1892......	5,147	$6.330	14,587	$3,672,825	33	3,700	127	$15,000	24,262	$520,050
1893......	5,905	11,625	13,908	3,185,265	25	2,500	22	2,100	24,134	406,380
1894......	6,932	9,810	13,117	2,437,615	19	4,075	*Nil.*	....	22,170	336,555
1895......	12,469	17,645	10,782	1,852,650	41	10,855	*Nil.*	....	17,758	247,150
1896......	18,331	25,940	7,786	1,299,640	36	7,500	44	6,775	19,588	332,255
1897......	15,228	....	7,235	....	30	....	127	....	19,586	....

METALS OBTAINABLE BY SMELTING THE ORES IN THE ABOVE TABLE. (*a*) (IN METRIC TONS AND DOLLARS; £1 — $5.)

Year.	Copper, Fine.		Gold—Kg.		Iron.		Lead. (*g*)		Silver—Kg.		Tin.		Zinc.	
1892	508	$123,730	87.18	$52,555	4,105,837	$52,080,165	30,013	$1,588,390	8,437	$224,990	9,418	$4,473,765	9,499	$1,017,680
1893	438	102,610	71.82	43,455	4,042,353	46,668,985	30,178	1,462,010	8,525	208,485	8,989	3,928,705	9,432	838,850
1894	454	74,055	131.72	74,055	4,417,032	49,995,930	30,162	1,428,120	7,575	166,565	8,461	3,022,500	8,260	655,145
1895	589	136,315	205.28	92,600	4,465,307	52,671,625	29,465	1,543,670	8,722	174,540	6,754	2,233,900	6,760	508,475
1896	565	140,900	42.07	25,175	4,835,597	56,877,370	31,811	1,754,700	8,828	181,825	4,915	1,538,390	7,224	616,200

(*a*) From *Mineral Statistics of the United Kingdom.* (*b*) Bog ore, which is raised in Ireland, is an ore of iron, used principally for purifying gas. (*c*) Not reported separately, and value included in total value of stone which was as follows: 1892, 43,338,680; 1893, 38,868,715; 1894, 38,478,580; 1895, 17,861,190; 1896, 17,786,250. (*d*) Including china clay, potters' clay, and fuller's earth; and for 1895 and 1896 comprises a large quantity of ordinary brick clay not included in the returns of previous years. (*e*) Not reported. (*f*) Not including chalk. (*g*) Smelted from native ores.

Additional products: In 1892, antimony ore, 6 metric tons ($490), from which was obtainable by smelting 2.5 tons ($580). None was produced in the subsequent years.

MINERAL IMPORTS OF THE UNITED KINGDOM. (*a*) (METRIC TONS AND DOLLARS; £1 — $5.)

Year.	Alkali.		Brass and Bronze Manufactures.		Brimstone.		Chemical Products.	China, Porcelain and Earthenware.		Copper Manuf'res Unenumerated.	Copper Ore.	
1892....	2,857	$207,580	761	$534,180	26,497	$738,905	$7,511,470	10,150	$3,284,420	$226,625	93,390	$2,926,865
1893....	4,455	395,520	947	581,720	26,168	623,965	6,778,230	10,260	3,127,660	363,595	82,192	2,430,110
1894....	7,907	519,120	1,133	669,385	23,771	518,140	6,877,445	10,246	3,097,860	700,905	84,130	2,468,125
1895....	9,353	572,930	1,637	854,905	25,318	496,835	6,383,350	12,[illegible]32	3,432,875	910,500	101,353	2,873,015
1896....	8,949	480,650	2,075	1,096,020	22,990	470,060	6,922,975	16,444	4,223,745	1,243,050	88,732	2,883,955
1897....	11,557	545,010	(*b*)	....	22,811	511,045	6,781,900	(*b*)	....	....	83,916	2,383,130

Year.	Copper Regulus and Precipitate.		Copper, Wrought, Unwrought, and Old.		Diamonds—Carats. (*i*)		Glass. All Kinds.		Glass. Bottles—Gross.		Glass. Total.
1892....	136,315	$16,460,530	37,423	$8,573,490	3,039,062	$19,534,960	131,553	$12,172,250	....	....	$12,172,250
1893....	120,609	14,164,700	44,648	9,879,325	2,670,915	18,347,920	134,651	12,216,295	....	....	12,216,295
1894....	80,107	8,839,775	61,260	12,325,000	2,485,352	14,989,765	106,468	11,295,535	821,795	$2,129,775	13,425,310
1895....	92,727	11,164,775	46,493	9,588,485	3,607,750	23,770,425	101,400	10,565,200	750,856	1,810,680	12,375,880
1896....	92,252	11,477,545	66,405	15,018,905	3,527,810	22,995,830	114,839	10,565,200	853,698	1,972,685	12,537,885
1897....	90,008	11,878,900	(*b*)	....	(*b*)	....	122,009	13,022,535	901,188	2,012,020	15,034,555

Year.	Gold Leaf. Number.		Gold Ore.		Guano.		Iron, Bar, Angle, Bolt, and Rod.		Iron, Girders, Beams & Pillars		Iron Manufactures.	
1892....	83,005,000	$780,065	202	$28,550	28,320	$947,165	77,130	$3,461,295	75,779	$2,512,870	146,079	$12,660,590
1893....	85,089,000	812,405	245	123,325	18,604	478,605	66,873	2,965,165	67,387	2,096,915	152,784	12,728,195
1894....	84,614,380	817,855	488	421,090	29,039	781,805	64,259	2,777,790	70,531	2,141,150	157,416	13,164,780
1895....	66,188,410	641,105	865	1,001,845	50,639	1,961,545	68,833	2,747,670	70,807	2,181,920	167,813	14,309,855
1896....	70,488,026	694,265	2,263	604,015	20,537	521,770	72,195	2,852,060	76,400	2,836,925	192,388	20,537,665
1897....	(*b*)	....	(*b*)	....	16,423	427,685	69,222	2,697,545	(*b*)	....	(*b*)	....

Year.	Iron Ore.		Iron, Pig and Puddled.		Iron and Steel Mfres	Steel, Unwrought.		Lead Ore.		Lead, Pig and Sheet.	
1892....	3,840,991	$18,584,100	57,433	$1,178,405	$13,936,865	6,587	$312,430	18,508	$404,060	185,706	$9,882,180
1893....	4,180,918	18,960,140	35,923	870,190	13,854,400	9,077	452,530	10,015	249,835	191,261	9,276,075
1894....	4,484,270	14,892,985	62,967	1,498,695	14,230,955	8,724	384,050	15,850	366,625	164,451	7,573,925
1895 ..	4,521,516	14,889,760	94,609	2,156,360	15,494,510	11,036	475,015	32,234	797,400	165,531	8,270,365
1896....	5,525,320	18,898,945	108,152	2,206,220	22,055,335	17,771	788,730	57,172	1,448,245	170,484	9,298,715
1897....	6,064,179	22,179,670	(b)	....	(b)	40,628	1,830,655	(b)	....	170,121	10,166,500

Year.	Manganese Ore.		Metals, Unenumerated, Wrought and Unwrought.		Nitrate of Soda.		Ores, Unenumerated.		Painters' Colors and Pigments.	Paraffine.	
1892....	111,580	$1,707,575	5,009	$2,093,935	121,474	$5,100,960	46,944	$2,311,475	$5,067,400	28,071	$3,748,520
1893....	123,721	1,779,920	5,217	2,158,335	88,155	4,080,985	44,634	2,100,880	4,956,645	39,045	4,062,665
1894....	130,029	1,692,000	5,606	2,162,300	127,305	5,834,000	45,391	1,822,915	4,544,005	31,397	3,166,045
1895....	133,623	1,484,740	4,620	1,945,575	124,650	4,994,485	46,104	1,570,045	4,369,555	36,612	3,778,950
1896....	162,542	1,844,740	5,886	2,294,375	108,148	4,182,760	45,782	1,289,665	4,950,635	36,850	3,555,250
1897....	(b)	....	(b)	....	107,525	4,055,325	(b)	....	(b)	39,284	3,375,055

Year.	Petroleum. Liters.		Phosphate Rock.		Plumbago.		Pyrites, Iron and Copper.		Quicksilver.		Saltpeter.	
1892....	591,435,384	$12,234,580	319,156	$3,328,445	10,407	$783,535	614,082	$5,317,530	1,989	$1,980,220	15,664	$1,339,655
1893....	704,735,905	12,733,800	328,708	2,972,335	11,030	899,555	622,623	5,327,035	1,787	1,705,930	12,322	1,069,365
1894....	740,519,277	12,494,880	386,351	3,616,025	14,361	1,059,230	625,907	5,246,555	1,743	1,516,810	14,700	1,327,880
1895....	804,777,131	16,844,520	365,414	3,166,570	10,526	887,100	591,782	4,935,895	1,689	1,672,790	11,607	1,068,365
1896....	862,960,772	18,660,280	295,975	2,329,655	13,861	1,121,195	596,480	4,998,965	1,604	1,638,645	17,310	1,392,420
1897....	606,741,864	16,757,695	330,335	2,466,060	(b)	....	633,009	5,104,480	1,862	1,954,405	16,744	1,288,495

Year.	Silver Ore.	Stone, Marble, Hewn or Manufactured.		Tin in Blocks, Ingots, Bars, or Slabs.		Tin Ore.		Zinc, Crude, in Cakes.		Zinc Manufactures.		Zinc Ore.	
1892....	$15,160,845	565,735	$3,516,725	29,940	$13,719,070	3,513	$665,905	53,628	$5,512,955	19,261	$2,315,400	33,218	$331,890
1893....	15,345,655	554,959	3,668,070	34,095	14,460,535	3,069	599,450	57,835	5,036,985	18,737	1,991,765	35,565	356,005
1894....	12,199,775	594,844	3,622,230	39,774	13,155,190	4,508	742,760	53,743	4,099,205	16,843	1,875,075	46,341	392,030
1895....	8,732,220	584,082	3,404,885	42,267	13,155,190	4,780	746,105	63,525	4,669,470	19,670	1,875,960	38,096	739,450
1896....	6,483,680	683,977	4,141,185	38,989	11,448,440	4,950	725,915	77,861	6,225,065	21,339	2,097,185	21,421	493,170
1897....	7,149,210	(b)	....	27,214	8,118,990	(b)	....	70,929	5,946,945	21,395	2,194,365	(b)	....

(a) *Accounts relating to Trade and Navigation of the United Kingdom*, 1897, from advance sheets.
(b) Not reported.

MINERAL EXPORTS OF THE UNITED KINGDOM. (a) (METRIC TONS AND DOLLARS; £1 — $5.)

EXPORTS OF DOMESTIC PRODUCE.

Year.	Alkali.		Brass and Manufactures.		Cement.		Coal, Coke, Cinders, and Fuel.		(b) Coal, etc., for Steam'rs	Coal Products (c)	Copper, Unwrought, in Ingots.	
1892	298,988	$10,597,200	5,497	$2,272,685	500,497	$4,514,550	30,941,287	$84,053,790	8,737,731	$6,661,365	42,968	$10,307,220
1893	296,301	9,289,640	5,844	2,291,165	444,566	3,722,120	29,496,466	71,877,380	8,257,207	6,375,310	28,798	6,836,460
1894	303,896	8,154,740	5,545	2,084,155	482,391	3,516,945	33,602,877	86,856,655	9,443,172	6,195,810	19,848	4,258,775
1895	317,439	7,787,665	5,445	2,093,005	401,812	3,207,755	33,631,075	77,169,015	9,558,314	7,868,655	30,019	6,724,565
1896	245,938	6,210,865	6,070	2,463,115	359,429	2,902,085	34,810,249	75,781,565	10,096,302	9,168,630	23,698	5,697,555
1897	252,786	6,393,450	5,718	2,458,370	398,023	3,239,595	37,695,772	88,296,470	....	8,340,420	21,252	5,381,155

Year.	Copper, Wrought or Manufactured.				Earthen and China Ware and Other Mfres. of Clay.	Glass.					Hardware and Cutlery.	Implements, Tools and Parts.
	Mixed or Yellow Metal.		Other Sorts.			Plate—Sq. Ft.		All Other.		Total Value.		
1892	14,965	$3,645,440	16,476	$4,864,985	$11,287,990	2,158,076	$582,335	54,334	$3,844,190	$4,426,525	$10,978,630	$6,310,245
1893	14,782	3,410,870	17,272	4,861,505	10,871,120	1,684,500	430,255	46,586	3,339,445	3,769,700	10,283,030	6,130,725
1894	16,011	3,410,130	15,653	4,146,235	9,520,880	1,336,600	363,170	45,562	3,213,820	3,576,990	9,172,405	5,972,970
1895	15,150	3,149,530	15,931	4,220,155	10,851,610	1,446,000	398,575	50,785	3,549,965	3,948,540	9,282,660	6,201,635
1896	11,428	2,576,510	15,593	4,445,120	10,847,690	1,804,000	512,690	57,222	3,949,755	4,462,445	10,612,020	7,068,345
1897	11,192	2,640,740	15,275	4,629,430	8,629,425	1,520,511	442,345	57,828	3,917,190	10,586,320	10,536,390	6,821,830

Year.	Iron, Pig and Puddled.		Iron, Bar (Except Railroad), Angle, Bolt, and Rod.		Iron, Railroad, of All Sorts.		Iron and Steel Wire and Manufactures, Except Telegraph Wire.		Hoops and Hoop Iron, Sheets (Ungalvanized), Boiler & Armor Plates. (*d*)		Iron, Galvanized Sheets.	
1892	779,396	$9,873,725	176,189	$5,738,410	475,491	$11,236,110	48,108	$3,969,575	142,359	$6,318,085	159,633	$10,385,840
1893	853,739	9,857,590	151,168	4,647,760	567,309	12,555,070	37,633	3,237,305	141,600	6,096,085	169,335	10,228,850
1894	844,281	9,564,790	131,198	4,116,825	432,046	9,426,995	35,230	3,102,680	129,230	5,166,995	172,253	9,743,260
1895	880,433	10,385,365	146,294	4,270,085	464,873	9,485,180	42,896	3,555,940	104,574	3,815,570	207,472	11,256,870
1896	1,077,128	12,669,415	180,978	5,471,445	759,625	17,802,050	57,008	4,519,975	122,660	4,226,140	248,348	14,218,110
1897	1,219,958	14,461,865	170,285	5,421,865	795,988	19,298,670	52,471	4,332,965	120,868	4,483,870	231,819	12,810,420

Year.	Black Plates for Tinning (Iron and Steel)		Tinned Plates.		Iron, Cast and Wrought, and Manufactures.		Old Iron.		Steel, Unwrought. (*f*)		Manufactures of Steel and Iron.	
1892	(*e*)	....	401,776	$26,651,080	325,027	$21,811,445	108,192	$1,683,080	151,517	$8,703,270	15,490	$2,503,770
1893	(*e*)	....	385,289	24,956,500	284,737	18,825,125	120,418	1,671,370	172,433	8,509,170	18,669	2,378,110
1894	(*e*)	....	359,591	21,098,930	270,137	17,159,950	84,588	1,106,580	214,879	9,870,905	18,966	2,490,905
1895	34,918	$1,891,730	371,978	21,195,965	298,486	18,638,085	98,654	1,262,700	211,616	9,748,975	23,718	3,103,200
1896	49,179	2,389,995	271,284	15,180,075	372,090	23,598,685	129,463	1,694,535	302,198	12,587,775	37,299	4,650,350
1897	59,668	2,844,645	276,260	15,186,395	382,179	24,496,375	99,269	1,195,995	304,249	13,083,895	47,626	5,706,895

Year.	Total of Iron and Steel.		Lead, Pig, Sheet, Pipe, and Other M'f'res.		Machinery	Salt, Rock and White.		Telegraph Wire and Apparatus.	Tin, Unwrought.		Zinc or ~~Spelter,~~ Wrought and Unwrought.	
1892	2,783,107	$108,898,840	59,698	$3,542,550	$69,486,785	664,602	$2,696,310	$4,549,585	5,737	$2,720,395	9,968	$894,880
1893	2,902,279	102,962,885	49,658	2,768,005	69,587,715	646,818	2,522,500	5,814,435	6,847	3,031,995	9,881	793,155
1894	2,692,398	93,448,815	47,818	2,589,055	71,026,075	781,308	3,020,525	6,938,670	5,948	2,160,065	9,300	682,525
1895	2,880,910	98,404,615	42,372	2,465,980	75,752,610	752,397	2,731,095	3,911,875	5,761	1,918,020	10,036	651,925
1896	3,607,204	119,006,500	41,873	2,616,885	85,071,250	671,510	2,351,650	4,285,870	6,299	1,967,390	9,640	672,645
1897	3,750,122	123,198,215	41,151	2,710,440	81,410,495	680,477	2,832,620	5,005,510	5,050	1,616,000	8,018	619,165

EXPORTS OF FOREIGN AND COLONIAL PRODUCE. (*a*) **(IN METRIC TONS AND DOLLARS; £1 — $5.)**

Year.	Chemical Products.	Copper, Unwrought, Partly Wrought, and Old.		Glass.					Guano.		Iron, Bar, Angle, Bolt, and Rod.	
				Bottles. Gross.		All Other Kinds		Total.				
1892....	$1,083,545	11,375	$2,817,210	(*g*)	....	90,294	$460,860	$460,860	1,961	$60,000	47,221	$1,914,820
1893....	984,285	13,019	3,066,395	(*g*)	....	94,128	481,860	481,860	1,478	63,670	28,561	1,199,960
1894 ...	1,061,810	6,594	1,894,975	10,952	$26,020	88,591	847,475	873,495	1,549	53,730	18,664	700,800
1895....	1,050,315	8,093	1,788,920	10,818	24,935	86,676	380,280	405,215	2,001	63,085	23,184	874,945
1896....	1,093,585	9,609	2,838,295	12,335	24,895	66,473	292,575	317,470	1,727	69,465	16,868	688,705
1897....	1,295,400	10,207	2,526,150	11,666	26,670	4,320	376,305	402,975	2,415	86,870	21,842	962,905

Year.	Steel, Unwrought.		Iron and Steel, N. E. S., Wrought and Manufactured. (*h*)		Petroleum. Liters.		Quicksilver.		Saltpeter.		Tin, in Blocks, Ingots, Bars, or Slabs.	
1892....	3,008	$147,390	35,615	$2,564,645	10,814,739	$527,005	1,718	$1,662,885	1,574	$131,335	16,626	$7,665,500
1893....	4,969	246,440	46,827	2,871,420	7,188,462	339,155	1,298	1,200,240	1,326	110,255	19,375	8,441,810
1894....	3,793	146,495	34,574	2,086,825	8,650,635	288,035	1,483	1,296,975	2,716	237,195	21,886	7,615,235
1895....	5,291	234,030	34,790	2,492,670	8,001,341	268,690	1.214	1,241,465	1,459	130,020	21.042	6,593,555
1896....	4,000	167,345	37,292	3,712,450	11,709,283	354,420	1,198	1,150,020	1,913	152,765	19,007	5,669,945
1897....	4,244	194,980	20,305	4,324,980	6,753,750	270,735	1.047	1,050,330	2,949	218,610	14,994	4,545,810

(*a*) From *Accounts Relating to Trade and Navigation of the United Kingdom.* (*b*) From *Mineral Statistics of the United Kingdom.* Coal, etc., number of metric tons shipped for the use of steamers engaged in the foreign trade. This not being an export in the ordinary acceptation of the term, the value thereof is not given in the trade returns. (*c*) Including naphtha, paraffine, paraffine oil, and petroleum. (*d*) Prior to 1895 iron black plates for tinning also were included under this heading. (*e*) Iron black plates for tinning included these years under "Hoops, Hoop Iron, Sheets, Boiler and Armor Plates;" steel black plates for tinning included under "Steel Unwrought." (*f*) Prior to 1895 includes steel black plates for tinning. (*g*) Included under "Glass—all other kinds." (*h*) N. E. S. signifies "not elsewhere specified." (*i*) Imports from the Cape of Good Hope, the sole source of supply.

UNITED STATES.

STATISTICS and full particulars of the mineral production of the United States will be found in the introduction and the articles on the different substances. We give below the mineral imports and exports for five years:

MINERAL IMPORTS OF THE UNITED STATES. (*a*)

Year.	Aluminum.							Antimony.			
	Crude.				Leaf.		Mfd.				
	Lb.	Kg.	Value.	Value per kgm.	Pkgs.	Value.	Value.	Lb.	Metric Tons.	Value.	Value per Met. Ton.
1893............	7,816	3,546	$4,683	$1.32	18,700	$1,903	$1,679	2,780,432	1,261	$242,341	$192.18
1894............	5,303	2,406	2,524	1.04	10,780	1,210	386	2,653,487	1,204	193,968	161.12
1895............	25,294	11,473	7,814	68	6,610	646.	1,841	3,399,908	1,587	223,968	141.12
1896............	698	316	591	1.87	4,657	523	2,305	3,583,390	1,625	170,092	104.67
1897............	1,882	854	1,082	1.26	4,260	870	3,279	1,146,696	520	46,955	90.30

Year.	Antimony Ore.				Asbestos.			Asphaltum.			
	Lb.	Metric Ton.	Value.	Value per Met. Ton.	Crude.	Manu-fact'ed.	Total.	Long Tons.	Metric Tons.	Value.	Value per Metric Ton.
1893	116,495	53	$5,253	$99.11	$175,602	$9,403	$185,005	76,996	78,228	$196,314	$2.51
1894	375,468	170	18,068	106.28	240,029	15,989	256,018	106,014	107,710	313,685	2.91
1895	668,610	303	14,718	48.57	225,147	19,731	244,878	79,194	80,461	212,407	2.63
1896	1,180,828	535	21,392	39.98	229,084	15,654	244,738	95,233	96,757	286,099	2.95
1897	5,502,132	2,496	167,373	67.06	264,220	10,570	274,790	127,825	129,862	427,390	3.30

Year.	Barium Sulphate.								Bauxite.			
	Manufactured.				Unmanufactured.							
	Short Tons.	Metric Tons.	Value.	Val. per Met. Ton.	Short Tons.	Metric Tons.	Value.	Val. per Met. Ton.	Lb.	Metric Tons.	Value.	Value per Met. Ton.
1893	1,032	936	$11,457	$12.24	2,983	2,706	$7,612	$2.81	11,431,678	5,185	$28,217	$5.44
1894	836	758	10,556	13.92	1,884	1,709	5,270	3.08	2,305,783	1,046	6,661	6.36
1895	1,629	1,478	17,112	11.57	2,551	2,314	7,561	3.26	12,985,525	5,890	29,194	4.95
1896	......	......	1,348	....	......	......	821	....	4,765,974	2,161	10,477	4.84
1897	1,300	1,179	13,822	11.74	502	455	579	1.27	5,944,639	2,695	10,515	3.90

Year.	Brass and Manufactures of. Value.	Calcium Chloride.				Cement. (*b*)			
		Lb.	Metric Tons.	Value.	Value per Metric Ton.	Barrels.	Metric Tons.	Value.	Value per Metric Ton.
1893..	$215,650	98,618,147	44,735	$1,843,410	$41.20	2,674,149	485,326	$3,470,169	$7.16
1894..	134,356	96,256,251	43,673	1,697,088	38.85	2,638,107	478,785	3,396,729	7.09
1895..	158,822	103,317,968	46,855	1,628,877	34.76	2,975,082	543,844	3,873,123	7.12
1896..	157,798	97,510,926	44,231	1,441,337	32.36	2,667,676	484,090	3,393,199	7.01
1897..	85,341	109,176,451	49,522	1,460,799	29.50	2,090,924	379,359	2,686,122	7.08

Year.	Chrome Ore.				Chromic Acid.				Clays or Earths, Including Kaolin.			
	Long Tons.	Metric Tons.	Value.	Value per Met. Ton.	Lb.	Kg.	Value.	Value per Kg.	Long Tons.	Metric Tons.	Value.	Value per Met. Ton.
1893..	6,354	6,456	$58,629	$9.08	3,708	1,682	641	$0.38	73,387	74,586	$564,547	$7.56
1894..	8,470	8,525	88,364	10.83	7,680	3,080	1,045	.34	78,698	79,963	616,506	7.79
1895..	5,230	5,314	82,845	15.59	2,083	945	414	.43	98,862	100,450	716,590	7.13
1896..	8,669	8,808	187,400	21.27	2,429	1,002	387	.39	98,243	99,815	707,826	7.09
1897..	11,566	11,751	186,318	15.85	71,230	32,305	5,477	.17	102,391	104,039	696,925	6.71

Year.	Coal.										
	Anthracite.				Bituminous.				Total.		
	Long Tons.	Metric Tons.	Value.	Per Met. Ton.	Long Tons.	Metric Tons.	Value.	Per Met. Ton.	Metric Tons.	Value.	Per Met. Ton.
1893	53,768	54,628	$148,112	$2.79	1,083,998	1,100,381	$3,623,893	$3.29	1,154,949	$3,772,004	$3.27
1894	90,068	91,509	234,024	2.55	1,242,714	1,262,597	3,785,513	2.99	1,353,665	4,019,537	2.97
1895	141,337	143,598	328,705	2.28	1,212,028	1,231,415	3,626,623	2.94	1,375,013	3,955,328	2.87
1896	102,566	104,212	239,687	2.30	1,246,991	1,266,943	3,488,115	2.75	1,371,155	3,727,802	2.72
1897	8,231	8,363	8,720	2.61	1,276,963	1,297,394	3,423,434	2.64	1,300,727	3,432,154	2.64

Year.	Coke.				Cobalt Oxide.				Fine Copper in Ore.			
	Short Tons.	Metric Tons.	Value.	Value per Met. Ton.	Lb.	Kg.	Value.	Value per Kg	Lb.	Metric Tons.	Value.	Value per Met. Ton.
1893	33,165	30,080	$99,688	$3.31	28,164	12,775	$41,105	$3.21	7,723,887	3,504	$467,968	$133.55
1894	29,137	26,427	70,358	2.66	24,020	10,900	29,857	2.73	3,870,769	1,756	297,118	163.50
1895	29,622	26,867	71,366	2.65	36,155	16,400	39,889	2.42	8,921,920	4,047	213,689	52.80
1896	43,873	39,347	114,713	2.91	27,189	12,333	36,212	2.93	2,636,480	1,196	126,580	105.83
1897	35,198	31,927	98,558	3.08	24,771	11,236	34,773	3.09	....	....	....	....

Year.	Copper, Ingots, Old, etc.				Copper, Manufactures. Value.	Copper. Total Value.	Cryolite.			
	Lb.	Metric Tons.	Value.	Value per Met. Ton.			Long Tons.	Metric Tons.	Value.	Value per Met. Ton.
1893....	5,536,690	2,510	$488,710	$194.70	$83,752	1,040,450	9,574	9,728	$126,688	$13.02
1894....	2,289,334	1,039	170,368	163.97	66,256	533,742	10,684	10,855	142,494	13.12
1895....	9,381,800	4,255	839,603	197.32	60,344	1,113,636	9,500	9,652	127,165	13.17
1896....	11,397,278	5,170	961,920	186.05	85,123	1,178,693	3,009	3,057	40,056	13.10
1897....	16,578,420	7,520	1,454,016	193.35	58,897	....	10,115	10,277	135,114	13.24

Year.	Earthen, Stone, and China Ware	Emery Grains.				Emery Rock.				Other Manufactures. Value.	Total Value.
		Lb.	Metric Tons.	Value.	Value per Met. Ton	Long Tons.	Metric Tons.	Value.	Value per Met. Ton.		
1893....	$8,769,778	516,958	234	$20,073	$86.12	5,066	5,147	$103,875	$20.18	$3,819	$127,767
1894....	6,978,572	597,718	271	18,645	68.80	1,642	1,668	51,487	30.86	1,880	71,962
1895....	10,523,925	678,761	308	25,066	81.38	6,803	6,912	80,386	11.63	27,586	133,038
1896....	9,690,234	751,464	341	26,520	77.77	6,289	6,390	119,667	18.72	1,971	148,158
1897....	8,409,678	520,095	236	20,022	84.84	5,209	5,292	107,649	20.36	2,211	129,882

Year.	Guano.				Iron Ore.				Pig Iron.			
	Long Tons.	Metric Tons	Value.	Value per Met. Ton.	Long Tons.	Metric Tons.	Value.	Value per Met. Ton.	Long Tons.	Metric Tons.	Value.	Value per Met. Ton.
1893	5,951	6,045	97,890	16.19	526,951	535,435	$906,687	$1.69	54,394	55,264	$1,224,347	$22.15
1894	5,646	5,736	105,879	18.45	168,541	171,238	267,241	1.56	15,582	15,831	407,688	25.74
1895	4,066	4,131	48,917	11.84	524,153	532,571	786,207	1.47	53,232	54,084	1,337,978	24.73
1896	6,838	6,947	88,231	12.70	682,806	692,999	1,036,917	1.49	56,272	57,172	1,307,890	22.87
1897	4,931	5,019	55 709	11.12	489,970	497,809	678,912	1.39	19,212	19,519	484,655	24.83

Year.	Scrap Iron and Steel.				Bar Iron, Rolled and Hammered.				Bars, Railway, of Iron or Steel.			
	Long Tons.	Metric Tons.	Value.	Value per Met. Ton.	Lb.	Metric Tons.	Value.	Value per Met. Ton.	Long Tons.	Metric Tons.	Value.	Value per Met. Ton.
1893	6,273	6,373	$97,552	$15.30	33,467,805	15,186	$605,965	$39.90	2,888	2,934	$57,584	$19.62
1894	2,380	2,418	43,710	18.07	20,669,895	9,576	377,397	39.41	300	304	4,292	14.11
1895	6,066	6,163	103,528	16.79	44,910,023	20,381	772,822	37.91	1,447	1,470	27,076	18.41
1896	8,250	8,382	130,012	15.51	36,458,396	16,538	686,730	41.53	7,796	7,921	207,648	26.21
1897	1,549	1,573	12,433	7.26	31,349,707	14,220	614,318	43.20	415	422	15,939	37.77

Year.	Hoop, Band, or Scroll.				Ingots, Blooms, Slabs, Billets, etc.				Sheet, Plate, and Taggers Iron or Steel.			
	Lb.	Met. Tons.	Value.	Value per Met. Ton.	Lb.	Met. Tons.	Value.	Value per Met. Ton.	Lb.	Metric Tons.	Value.	Value per Met. Ton.
1893	2,278,828	1,034	$65,111	$62.96	60,183,688	27,299	$1,293,884	$47.39	83,598,034	37,920	$1,746,035	$46.04
1894	1,803,104	818	51,111	62.48	21,266,348	9,646	809,184	83.89	64,500,887	29,258	1,197,671	40.93
1895	33,168	15	2,925	195.00	58,811,651	26,677	1,610,889	60.38	32,549,127	14,764	727,638	49.28
1896	59,105	27	5,654	209.40	45,598,270	20,683	1,657,805	80.15	15,201,124	6,896	328,421	47.62
1897	61,916	28	2,873	102.61	38,600,934	17,509	1,523,410	87.00	5,854,990	2,656	170,385	64.15

Year.	Ties for Baling Cotton.				Tin Plates, Terne Plates, and Taggers Tin.			
	Lb.	Metric Tons.	Value.	Value per Metric Ton.	Lb.	Metric Tons.	Value.	Value per Metric Ton.
1893..........	3,801,488	1,724	$78,385	$45.48	567,065,948	257,174	$15,559,423	$60.50
1894..........	103,413	46	3,392	73.74	481,751,601	218,521	12,053,167	55.15
1895..........	7,806,304	3,541	102,309	28.89	491,880,513	223,100	11,482,380	51.46
1896..........	16,031,468	7,272	235,880	32.43	266,343,267	120,808	6,140,161	50.82
1897..........	235,154	107	3,686	34.45	187,825,880	85,198	4,366,898	51.25

Year.	Wire Rods.				Wire, and Articles made from.				Manufactures. Value.	Total Value of Iron Imports.
	Lb.	Metric Tons.	Value.	Value per Met. Ton.	Lb.	Metric Tons.	Value.	Value per Met. Ton.		
1893....	78,438,146	35,579	$1,387,066	$38.98	9,286,323	4,212	$588,817	$139.79	$6,954,460	$29,656,539
1894....	50,640,787	22,971	923,675	40.21	9,604,868	4,357	514,484	118.08	4,457,855	20,843,576
1895....	60,107,521	27,264	1,090,707	40.00	12,931,695	5,866	716,901	122.21	7,796,988	25,772,186
1896....	42,509,008	19,281	811,224	42.07	8,231,248	3,734	492,958	132.01	7,602,256	19,506,576
1897....	36,768,588	16,679	772,950	46.34	5,720,828	2,596	344,855	132.84	5,588,618	18,835,950

Year.	Lead, Ore, and Dross.				Lead, Pig, Bars, Scrap, and in Ore.			
	Lb.	Metric Tons.	Value.	Value per Metric Ton.	Lb.	Metric Ton .	Value.	Value per Metric Ton.
1893........	58,487,319	26,529	$1,004,295	$37.85	3,621,525	1,643	$141,405	$86.06
1894........	33,020,250	14,978	437,999	29.24	139,961,911	63,486	4,228,706	66.60
1895........	45,052,674	20,435	687,222	33.62	201,617 855	91,453	2,910,547	31.82
1896........	37,829,583	17,159	631,381	36.79	160,318,517	72,720	1,780,265	24.48
1897........	31,841,666	14,443	575,108	39.82	185,318,412	84,060	2,480,471	29 51

Year.	Lead, Sheet, Pipe, and Shot.				Lead, Other Manufactures.	Total Value of Lead Imports.	Manganese.			
							Ore.			
	Lb.	Metric Tons.	Value.	Value per Met. Ton.			Long Tons.	Metric Tons.	Value.	Value per Met. Ton.
1893....	56,678	26	$2,914	$112.08	$1,691	$1,150,305	67,717	68,807	$860,832	$12.51
1894....	44,080	20	2,050	102.50	1,552	4,670,307	44,655	45,384	432,561	9.53
1895....	128,008	58	5,030	86.72	12,961	3,615,760	86,111	87,489	747,910	8.54
1896....	216,820	98	8,513	86.86	5,587	2,425,746	31,489	31,993	250,466	7.83
1897....	95,891	43	4,042	94.00	4,846	3,064,477	39,574	40,207	340,945	8.48

Year.	Marble and Stone, and Manuf's of.			Metals, Metal Compositions, and Manufactures of, N.E.S.			Mica, Mineral Substances, and Nickel.		
	Marble and Manufacturers of.	Stone and Manufactures of.	Total.	Bronze Manufactures.	All Other.	Total.	Mica.	Mineral Substances N. E. S.	Nickel.
	Value.	Value.	Value.	Value.	Value.	Value.	Value.	Value.	Value.
1893	$1,062,843	$574,322	$1,637,165	$631,818	$5,693,489	$6,325,307	$120,864	$261,646	$384,628
1894	787,657	864,733	1,652,390	478,672	3,288,477	3,767,149	126,184	139,688	45,927
1895	865,243	411,122	1,276,365	521,505	4,180,892	4,702,397	174,886	111,447	56,890
1896	808,030	387,979	1,196,009	468,884	3,692,937	4,161,821	169,086	74,395	32,532
1897	860,659	263,381	1,124,040	526,741	3,543,827	4,070,568	159,616	73,878	53,013

Year.	Oil, Mineral.				Paints, Mineral. Zinc Oxide in Oil,				Paints & Colors.	Platinum, Manufactur'd		
	Gallons.	Liters.	Value.	Value per Liter.	Lb.	Metric Tons.	Value.	Value pr. Met. Ton.	Value.	Kg.	Value.	Value per Kg.
1893	523,800	1,982,583	31,801	$0.017	....	....	....	....	$1,294,857	....	$1,412	....
1894	152,870	578,659	27,667	.047	59,291	27	....	....	1,045,251	....	....	....
1895	1,917,823	7,259,804	54,963	.007	129,343	59	$7,272	$123.25	1,363,657	....	171	....
1896	68,803	260,419	14,062	.054	311,023	141	14,793	104.90	1,189,781	2,521	906,671	$359.64
1897	949,178	3,592,638	77,789	.021	502,357	228	19,608	86.00	1,319,894	2,684	960,299	357.41

Year.	Platinum, Ore, Sponge, Plate.			Plat'm Vases, Retorts	Potash, Chromate & Bichromate·				Potash, Muriate.			
	Kg.	Value.	Val. per Kg.	Value.	Lb.	Met. Tons.	Value.	Value per Met. Ton.	Lb.	Metric Tons.	Value.	Val. per Metric Ton.
1893	1,993.20	$538,478	$270.15	$69,823	979,706	444	$78,981	$177.88	74,663,116	38,407	$1,192,516	$31.04
1894	1,670.90	485,272	290.42	88,195	1,483,762	673	125,796	186.91	101,597,074	46,097	1,540,061	33.40
1895	2,320.13	690,584	297.64	27,354	2,045,910	928	181,242	195.30	81,833,531	37,120	1,296,184	34.92
1896	2,584.16	437,189	169.18	106,286	952,794	432	80,538	186.43	86,525,963	39,248	1,392,504	35.47
1897	2,928.44	1,077,650	368.00	43,800	1,329,473	603	108,497	179.93	108,839,049	49,369	1,683,472	34.09

Year.	Potash, Nitrate.				Precious Stones.		Pyrites.				
					Rough & Uncut.	Cut.					
	Lb.	Metric Tons.	Value.	Value per Met. Ton.	Value.	Value.	Long Tons.	Metric Tons.	Value.	Value per Met. Ton.	Average Sulph % Contents.
1893..	13,374,016	6,066	$369,274	$60.87	$802,075	$10,022,871	194,934	198,072	$721,699	$3.64	(*d*)
1894..	9,375,950	4,254	249,842	58.73	839,806	6,710,472	163,546	166,163	590,905	3.55	25
1895..	11,419,090	5,180	305,207	58.91	111,033	6,623,669	190,436	193,483	673,812	3.48	....
1896..	20,085,827	9,111	479,999	52.67	78,815	4,854,858	199,678	202,873	1,140,571	5.62	....
1897..	16,276,352	7,383	306,696	41.54	1,425,614	5,090,125	259,546	263,699	874,419	3.32	25

Year.	Quicksilver.	Salt.				Soda, Nitrate.			
	Value.	Lb.	Metric Tons.	Value.	Value per Met. Ton.	Long Tons.	Metric Tons.	Value.	Per Met. Ton.
1893.............	$12,507	332,939,120	151,515	$568,202	$3.75	115,012	116,852	$3,673,587	$31.43
1894.............	6	420,226,039	191,118	643,167	3.36	98,026	99,594	3,185,356	31.98
1895.............	2,508	566,869,046	257,130	700,811	2.95	118,477	120,378	3,778,360	31.38
1896.............	2,087	526,504,050	238,820	696,197	2.91	115,504	117,352	3,566,744	30.39
1897.............	20,147	461,813,843	209,479	611,166	2.44	94,965	96,484	2,810,187	29.12

Year.	Soda, Bicarbonate.				Soda, Caustic.			
	Lb.	Metric Tons.	Value.	Value per Metric Ton.	Lb.	Metric Tons.	Value.	Value per Metric Ton.
1893..........	1,380,496	526	$23,136	$43.98	52,116,492	23,641	$1,171,878	$49.56
1894..........	4,579,524	2,028	63,625	31.37	44,772,512	20,309	911,942	44.90
1895..........	8,682,028	3,937	123,425	31.35	72,019,114	32,668	1,211,090	37.13
1896..........	4,343,786	1,970	60,878	30.90	47,827,247	21,694	859,809	39.63
1897..........	965,669	438	13,982	31.92	57,742,392	26,192	988,818	37.73

Year.	Soda Ash and Sal Soda.				Other Soda Salts.			
	Lb.	Metric Tons.	Value.	Value per Metric Ton.	Lb.	Metric Tons.	Value.	Value per Metric Ton.
1893..........	348,994,906	158,346	$3,983,039	$25.16	29,850,109	13,544	$205,523	$15.17
1894..........	321,300,874	144,971	3,665,836	25.28	17,717,714	8,016	132,335	16.51
1895..........	307,026,094	139,266	2,321,612	16.67	9,943,915	4,510	155,006	34.37
1896..........	191,780,537	86,991	1,443,417	16.59	5,623,071	2,551	100,917	39.56
1897..........	154,656,060	70,152	1,122,867	16.00	8,892,814	4,034	114,971	28.50

Year.	Sulphur, Crude.				Sulphur, Flowers.				Sulphur, Refined.			
	Long Tons.	Metric Tons.	Value.	Value per Met. Ton.	Long Tons.	Metric Tons.	Value.	Value per Met. Ton.	Long Tons.	Metric Tons.	Value.	Value per Met. Ton.
1893	107,601	109,333	$1,903,191	$17.40	241	245	$5,746	$23.45	43	44	$1,017	$23.11
1894	124,467	126,500	1,734,613	13.71	165	168	4,145	24.67	41	42	1,207	28.74
1895	115,959	127,974	1,593,148	12.45	581	590	12,888	21,84	229	233	4,378	18.79
1896	145,318	147,643	2,085,076	14.12	665	675	13,266	19.65	447	454	8,226	18.11
1897	138,846	141,067	2,442,240	17.31	319	324	7,950	24.54	148	150	3,387	22.58

Year.	Talc.				Tin.			
	Lb.	Metric Tons.	Value.	Value per Metric Ton.	Lb.	Metric Tons.	Value.	Value per Met. Ton.
1893..........	2,720,528	1,234	$12,825	$10.39	40,184,556	18,228	$8,007,293	$439.27
1894..........	1,242,171	563	6,815	12.14	39,268,628	17,812	5,944,065	333.71
1895..........	6,329,268	2,871	25,843	9.00	54,252,045	24,609	7,405,619	300.93
1896..........	3,901,814	1,770	18,693	10.56	44,629,324	20,248	5,848,933	288.86
1897..........	1,597,849	725	8,423	11.61	55,172,571	25,026	7,415,933	296.33

Year.	Zinc.					
	Block, Pig, and Old.				Manufactures of. Net Value.	Total Value.
	Lb.	Metric Tons.	Value.	Value per Met. Ton.		
1893..........	425,998	193	$22,931	$118.86	$20,756	$43,687
1894..........	512,932	233	17,271	74.12	12,342	29,613
1895..........	864,113	392	29,352	74.87	12,183	41,535
1896..........	856,044	388	25,904	66.76	15,728	41,632
1897..........	2,557,341	1,160	95,883	82.66	19,431	115,314

(*a*) From *Summary Statements of the Imports and Exports of the United States*. The following substances, not given in the above table, were imported in 1893: Bromine, 780 lb., $2.34; spiegeleisen and ferro-manganese, 37,457 long tons. $879,731. In 1894: Lead ore and dross, 33,020,250 lb., $437,999; bromine, 20 lb., $11; borax, 1,029,786 lb.; $39,256. In 1895: Borax, 4,478,749 lb., $110,190. (*b*) Custom-house returns for these years are given in pounds, which are reduced to barrels of 400 lb. for convenience of comparison. (*d*) Containing above 25% of sulphur.

MINERAL EXPORTS OF DOMESTIC PRODUCTION OF THE UNITED STATES. (*a*)

Year.	Asbestos.	Brass & Manufactures of.	Cement.				Chemicals, Drugs, & Medicines.	Coal.			
								Anthracite.			
	Value.	Value.	Bbls.	Metric Tons.	Value.	Value per Met. Ton.	Value.	Long Tons.	Metric Tons.	Value.	Val. per Met. Ton.
1893	$17,134	$741,317	(*b*) 93,485	16,961	$154,461	$9.10	$7,002,879	1,334,287	1,355,736	$6,341,007	$4.63
1894	5,762	779,875	(*b*) 108,000	19,596	165,809	8.46	7,722,532	1,440,625	1,463,675	6,359,021	4.34
1895	....	730,424	(*b*) 83,632	15,174	117,646	7.75	8,749,090	1,470,710	1,494,241	5,937,130	3.96
1896	....	1,026,191	54,639	9,913	86,757	8.75	9,261,354	1,350,000	1,371,600	5,925,506	4.32
1897	73,736	1,346,802	53,466	9,700	93,684	9.66	9,633,381	1,297,282	1,318,088	5,830,633	4.42

Year.	Coal—*Continued.*							Copper Ore. (*c*)			
	Bituminous.				Total Long Tons.	Total Metric Tons.	Total Value.				
	Long Tons.	Metric Tons.	Value.	Value per Met. Ton.				Lb.	Metric Tons.	Value.	Val. per Metric Ton.
1893	2,324,591	2,361,784	$6,009,801	$2.54	3,658,878	3,717,520	$12,350,808	93,527,950	42,424	$4,257,128	$100.35
1894	2,195,716	2,230,847	4,970,270	2.22	3,636,341	3,694,522	11,329,291	9,748,480	4,422	440,129	99.53
1895	2,211,983	2,247,375	4,816,847	2.14	3,682,693	3,741,616	10,753,977	30,965,760	14,045	1,631,251	116.13
1896	2,276,202	2,312,621	5,072,818	2.19	3,626,202	3,684,221	10,998,324	41,452,240	18,797	2,398,914	127,35
1897	2,400,744	2,459,156	5,332,856	2.09	3,698,026	3,777,194	11,163,491	20,303,360	9,220	1,999,029	216.93

Year.	Copper, Pig, Sheet, and Old.				Copper. Manufactures. Value.	Copper. Total Value.	Earthen, and China Ware.	Glassware.	Gold and Silver in Coin and Bullion. (*e*)	
	Lb.	Metric Tons.	Value.	Val. per Met. Ton.			Value.	Value.	Gold.	Silver.
1893	*d* 138,984,128	63,048	$14,213,378	$225.45	$464,991	$18,985,497	$151,308	$971,508	$79,775,820	$46,288,721
1894	162,393,000	73,681	15,324,925	207.99	878,040	16,143,094	188,289	917,519	101,819,924	47,044,205
1895	121,328,390	55,034	12,222,769	222.09	1,084,289	14,988,309	139,297	1,002,328	104,605,623	53,888,153
1896	259,223,924	111,758	27,822,280	248.95	819,017	31,035,211	169,342	1,115,252	56,742,844	63,029,836
1897	277,255,742	125,763	30,597,645	243.29	958,379	31,556,024	207,602	1,234,558	34,276,401	58,661,298

Year.	Gold and Silver in Ores. (*f*)		Iron Ore.				Iron, Pig.			
	Gold.	Silver.	Long Tons.	Metric Tons.	Value.	Value per Met. Ton.	Long Tons.	Metric Tons.	Value.	Value per Met. Ton.
1893	$190,849	$190,846	....	....	....	....	24,587	24,989	$379,487	$11.18
1894......	149,501	149,501	....	....	....	....	24,480	24,872	309,222	12.43
1895......	....	....	1,549	1,573	$7,654	$4.86	26,164	26,584	371,297	13.96
1896......	209,621	992,675	11,016	11,192	38,916	3.48	61,071	62,048	943,022	15.35
1897......	102,209	309,018	7,583	7,704	24,612	3.19	262,686	266,889	3,269,010	12.25

Year.	Iron Bar.				Iron, Boiler, Band, Hoop, Scroll, and Sheet.				Iron, Nails and Spikes, Cut.			
	Long Tons.	Metric Tons.	Value.	Value per Met. Ton.	Long Tons.	Metric Tons.	Value.	Value per Met. Ton.	Lb.	Metric Tons.	Value.	Val. per Metric Ton.
1893	1,842	1,872	$94,239	$50.34	255	259	$10,467	$40.41	13,191,018	5,983	$282,176	$47.16
1894	3,195	3,248	130,874	43.22	99	100	5,380	53.80	18,321,904	8,311	331,183	39.84
1895	3,329	3,383	147,798	43.68	198	201	8,169	40.64	17,639,414	8,001	339,825	42.47
1896	3,505	3,558	168,680	47.38	268	272	12,303	45.23	23,708,847	10,754	458,758	43.59
1897	4,498	4,561	150,897	33.08	1,423	1,446	44,754	30.95	33,771,216	15,218	670,709	44.07

Year.	Iron Nails, Spikes, Wire, Rod, Horseshoe, and all other, inc. Tags.				Plates and Sheets of Iron.				Plates and Sheets of Steel.			
	Lb.	Metric Tons.	Value.	Val. per Met. Ton.	Lb.	Metric Tons.	Value.	Value per Met. Ton.	Lb.	Metric Tons.	Value.	Val. per Metric Ton.
1893	2,745,147	1,245	$173,275	$139.18	4,254,617	1,930	$97,677	$50.61	1,219,902	553	$35,885	$64.89
1894	3,892,015	1,765	196,175	111.15	4,987,830	2,262	111,586	49.33	1,856,832	842	58,641	63.17
1895	5,301,908	2,304	239,610	104.00	946,470	429	32,170	74.98	1,818,319	825	60,889	73.80
1896	9,563,812	4,338	362,291	83.51	1,725,779	784	48,905	62.37	4,144,127	1,880	90,568	51.36
1897	20,070,224	9,104	550,715	60.49	9,061,447	4,110	175,799	42.77	11,364,821	5,155	173,567	33.66

Year.	Rails of Iron.				Rails of Steel.				Wire.			
	Long Tons.	Metric Tons.	Value.	Value per Met. Ton.	Long Tons.	Metric Tons.	Value.	Value per Met. Ton.	Lb.	Met. Tons.	Value.	Value per Met. Ton.
1893	164	167	$5,059	$30.29	19,712	20,027	$590,929	$29.56	37,504,808	17,012	$1,006,014	$59.13
1894	1,327	1,348	32,306	24.34	12,229	12,425	323,880	26.07	59,386,012	26,937	1,304,794	48.44
1895	6,792	6,900	139,470	20.21	8,807	8,948	222,661	24.88	66,024,358	29,948	1,375,195	45.90
1896	628	638	18,581	28.18	72,503	73,663	1,712,716	23.30	85,216,157	38,655	1,788,095	46.23
1897	5,418	5,499	95,520	17.37	142,808	145,093	2,949,901	20.33	118,887,872	53,927	2,853,829	48.65

Year.	Lead Manufactures.	Marble, Stone, & Manufactures of.	Mica.	Nickel. (*g*)	Petroleum (1 — 1,000 in Quantities and Value).							
					Crude.				Naphtha.			
	Value.	Value.	Value.	Value.	Gallons.	Liters.	Value.	Value per Liter.	Gallons.	Liters.	Value.	Value per Liter.
1893	$508,090	$964,616	$480	$378,577	115,091	435,619	$3,966	$0.009	16,344	61,862	$1,004	$0.016
1894	497,998	1,009,704	659	495,218	114,825	434,612	4,661	.010	14,915	56,453	912	.016
1895	214,856	959,871	*Nil.*	239,897	116,108	439,469	6,286	.014	12,922	48,910	1,000	.024
1896	601,373	1,156,051	*Nil.*	606,833	118,133	447,133	6,032	.013	13,641	51,631	1,123	.021
1897	433,319	1,682,044	*Nil.*	997,391	121,864	461,255	5,044	.011	13,704	51,869	1,020	.020

Year.	Petroleum—*Continued.*											
	Illuminating.				Lubricating.				Residue, etc.			
	Gallons	Liters.	Value.	Value per Liter.	Gallons.	Liters.	Value.	Value per Liter.	Gallons	Liters.	Value.	Value per Liter.
1893	711,828	2,710,269	$31,796	$0.011	35,645	134,916	$5,069	$0.037	548	2,104	$35	$0.016
1894	734,057	2,778,406	30,399	.019	39,946	151,195	5,369	.035	119	450	10	.022
1895	686,006	2,596,533	43,540	.017	47,877	180,214	6,289	.035	170	643	14	.022
1896	758,076	2,869,317	49,704	.018	51,705	195,705	6,770	.034	521	1,972	28	.014
1897	804,446	3,044,828	46,876	.015	52,679	199,390	6,732	.034	12,247	46,355	335	.007

Year.	Petroleum—*Continued.*				Quicksilver.				Tin Manufactures. Value.
	Paraffine.								
	Gallons.	Liters.	Value.	Value per Liter.	Lb.	Metric Tons.	Value.	Value per Met. Ton.	
1893.............	99,061	371,346	$4,553	$0.012	1,272,271	577	$542,410	$940.05	$258,449
1894.............	84,983	321,661	3,277	.012	1,102,187	500	397,528	795.05	301,508
1895.............	114,234	432,376	4,505	.010	1,188,955	504	482,085	956.91	262,223
1896	112,517	425,877	4,563	.010	1,525,726	692	618,437	895.02	268,581
1897.......... ...	136,069	515,082	5,284	.010	1,007,770	457	394,549	863.34	284,020

Year.	Zinc Ore and Oxide.				Zinc Sheets, Pigs, Bars.				Manufactures. Value.	Total Value.
	Lb.	Metric Tons.	Value.	Value per Met. Ton.	Lb.	Metric Tons.	Value.	Value per Met. Ton.		
1893....	109,760	50	$1,271	$25.42	7,446,984	3,379	$413,678	$122.18	$234,787	$639,731
1894....	....	....	5	....	3,607,050	1,610	144,674	89.49	99,406	243,485
1895....	53,760	24	1,008	42.00	3,060,805	1,388	153,175	110.35	50,051	204,234
1896....	4,648,000	2,008	47,408	22.49	20,260,169	9,160	1,018,620	111.85	51,001	1,112,029
1897...	18,502,400	8,393	211,130	25.18	28,490,662	12,923	1,356,538	104.97	71,021	1,638,909

MINERAL EXPORTS OF FOREIGN PRODUCE FROM THE UNITED STATES. (*a*)

Year.	Asphaltum or Bitumen (Crude.)				Brass and Manufactures of. Value.	Cement.			
	Long Tons.	Metric Tons.	Value.	Value per Met. Ton.		Lb.	Metric Tons.	Value.	Value per Met. Ton.
1893............	378	384	$4,838	$12.60	$3,430	5,710,675	2,590	$20,202	$7.80
1894............	502	510	9,211	18.06	6,909	3,889,928	1,764	15,072	8.54
1895............	72	73	1,906	26.11	8,711	3,578,230	1,623	13,895	8.56
1896............	113	115	2,615	22.74	3,488	4,437,261	2,013	16,558	8.22
1897............	40	41	1,042	25.41	3,210	2,488,350	1,129	9,705	8.60

Year.	Chemicals.											
	Salts of Potash. (*h*)				Chloride of Lime.				Nitrate of Soda.			
	Lb.	Kg.	Value.	Value per Kg.	Lb.	Kg.	Value.	Value per Kg.	Lb.	Kg.	Value.	Value per Kg.
1893	109,778	49,794	$4,922	$0.09	2,566	1,164	$231	$0.19	5,438,720	2,467,003	$105,624	$0.04
1894	719,361	326,529	14,436	.04	19,943	9,046	550	.06	1,229,760	557,819	19,819	.04
1895	379,767	172,260	12,555	.07	10,600	4,808	305	.06	2,428,160	1,101,413	44,847	.04
1896	774,452	351,291	22,333	.06	5,500	2,495	105	.04	1,462,720	663,490	24,254	.04
1897	124,277	56,372	4,763	.08	35,052	15,899	616	.04	2,022,720	917,506	33,979	.04

Year.	Chemicals—*Continued.*											
	Caustic Soda.				Sal Soda and Soda Ash.				All Other Salts of Soda.			
	Lb	Kg.	Value.	Value per Kg.	Lb.	Kg.	Value.	Value per Kg.	Lb.	Kg.	Value.	Value per Kg.
1893	1,760,856	798,724	$45,724	$0.06	193,556	87,797	$2,519	$0.02	68,759	33,189	$1,135	$0.04
1894	2,929,473	1,328,809	66,017	.05	101,886	46,216	1,305	.03	131,118	59,475	5,648	.09
1895	1,592,150	722,199	31,691	.04	269,765	122,365	2,423	.02	68,127	30,902	1,174	.04
1896	1,703,173	772,559	33,433	.04	470,102	213,238	4,096	.02	36,839	16,710	380	.02
1897	1,824,565	827,623	34,332	.04	2,246,181	1,018,868	9,128	.01	20,797	9,433	262	.03

Year.	Clays or Earths of All Kinds, including China Clay.				Coal, Bituminous.				Copper.			
									Copper Ore, Fire Copper Therein.			
	Long Tons.	Metric Tons.	Value	Value per Met. Ton.	Long Tons.	Metric Tons.	Value	Value per Met. Ton.	Lb.	Metric Tons.	Value.	Val. per Met. Ton.
1893	175	178	$1,531	$8.60	9	9	$126	$14.00	1,012,267	459	$81,187	$176.88
1894	92	94	616	6.57	877	891	4,934	5.54	235,140	106	20,008	188.68
1895	89	90	740	8.22	3,440	3,495	7,699	2.20	2,457,280	111	111,007	100.00
1896	32	33	109	3.30	5,204	5,287	7,990	1.51	975,200	442	32,715	74.01
1897	16	16	63	3.93	5,297	5,382	6,337	1.18	1,326,320	602	85,170	141.71

Year.	Copper—*Continued.*					Earthen, Stone, and China-ware.	Fertilizers.			
	Pigs, Bars, Ingots, Old, and Other Unmanufactured.				Manufactures. Value.		Guano.			
	Lb.	Metric Tons.	Value.	Value per Met. Ton.			Long Tons.	Metric Tons.	Value.	Value per Met. Ton.
1893.....	1,007,554	457	$80,236	$175.57	$20,546	$15,657	6	6	$295	$49.16
1894.....	1,150,169	521	78,544	150.75	13,056	19,541	106	107	1,620	15.13
1895.....	475,588	215	43,193	200.89	11,626	25,482	....	....	....	....
1896.....	*Nil.*	....	....	....	7,307	28,267	26	26	657	25.27
1897.....	406,596	184	30,167	163.93	4,225	23,438	*Nil.*	....	....	....

Year.	Fertilizers—*Continued.*					Glass and Glass-ware.	Gold-bearing Ores, N. E. S.	Gold and Silver, Manufactures of.	Graphite.			
	Phosphates, Crude or Native.				Other Fert'z's							
	Long Tons.	Metric Tons.	Value.	Value per Met. Ton.	Value.	Value.	Value.	Value.	Long Tons.	Metric Tons.	Value.	Value per Met. Ton.
1893	....	....	....	....	$222	$11,366	$17,057	$17,308	164	167	$5,615	$33.62
1894	....	....	....	....	8	26,509	....	55,065	43	44	4,371	99.33
1895	743	755	$12,775	$16.92	2,154	15,303	362,379	53,716	5	5	305	61.00
1896	*Nil.*	....	....	....	1,111	13,761	....	29,482	6	6	296	46.00
1897	65	66	1,782	27.00	3,482	15,579	....	....	128	130	7,393	56.87

Year.	Iron and Steel, and Tin Plate.											
	Pig Iron.				Scrap Iron and Steel, fit only to be remanufactured.				Bar Iron, Rolled or Hammered.			
	Long Tons.	Metric Tons.	Value.	Value per Met. Ton.	Long Tons.	Metric Tons.	Value.	Value per Met. Ton.	Lb.	Metric Tons.	Value.	Value per Met. Ton.
1893	35	36	$350	$9.72	117	119	$1,800	$15.12	7,067	3	$148	$49.33
1894	83	84	962	11.45	1,526	1,550	18,422	11.88	72,160	33	1,606	48.66
1895	210	213	2,536	11.89	92	94	1,024	10.89	8,207	3	288	96.00
1896	599	609	12,220	20.06	240	244	2,160	8.85	19,107	9	610	67.77
1897	114	116	1,394	12.00	57	58	313	5.40	66,345	30	1,699	56.60

Year.	Iron and Steel, and Tin Plate—*Continued.*											
	Railway Bars of Iron or Steel, or in Part of Steel.				Ingots, Blooms, Slabs, Billets, and Bars of Steel, and Steel in Forms, N. E. S.				Steel Plate and Taggers, Wire Rod, Wire, and Wire Rope, and Structural Iron or Steel.			
	Long Tons.	Metric Tons.	Value.	Value per Met. Ton.	Lb.	Metric Tons.	Value.	Value per Met. Ton.	Lb.	Metric Tons.	Value.	Value per Met. Ton.
1893	1,243	1,263	$24,297	$19.23	181,111	82	$10.232	$124.78	336,682	152	$8.503	$55.94
1894	546	555	10,449	18.82	64,650	29	8.094	286.00	234,857	107	5.141	48.04
1895	204	207	3,755	18.14	43,143	19	2,499	131.52	516.067	235	12,026	51.17
1896	*Nil.*	....	....	....	*Nil.*	....	....	....	3,102.098	1.407	46.381	32.96
1897	262	266	11,921	44.82	15,515	7	1.728	246.86	2,446,012	1.109	68,878	62.11

Year.	Iron and Steel, and Tin Plate—*Continued.* Tin Plates, Terne Plates, and Taggers Tin. Lb.	Metric Tons.	Value.	Value per Met. Ton.	Manufactures. Value.	Lead and Manufactures of. Value.	Marble and Stone and Manufactures of. Value.	Metal Compositions and Manufactures. Value.	Mineral Substances. N. E. S. Value.
1893.........	1,256,398	570	$36,542	$64.11	$164,721	$5,478,182	$10,736	$91,694	$2,572
1894.........	920,426	418	29,402	70.34	175,727	3,316,481	18,832	270,557	7,196
1895.........	666,458	302	18,446	61.08	167,150	713,271	6,998	66,389	4,655
1896.........	1,674,187	760	40,920	53.84	217,234	1,504,987	14,227	48,757	....
1897.........	2,951,473	1,339	79,179	59.21	330,832	2,094,685	15,156	32,791	....

Year.	Oil, Mineral. Gallons.	Liters.	Value.	Value per Liter.	Paints and Colors. Value.	Platinum, Unmanufactured. Lb.	Kg.	Value	Value per Kg.	Precious Stones. Value.
1893.........	4,776	18,087	$1,045	$0.06	$10,271	1	½	$35	$17.50	$311,660
1894.........	40,350	152,725	12,291	.08	9,180	....	....	....	....	7,071
1895.........	23	87	43	.49	24,147	....	....	....	....	22,967
1896.........	*Nil.*	....	....	....	23,703	....	....	....	....	18,979
1897.........	*Nil.*	....	....	....	15.473	*Nil.*	....	....	....	26,698

Year.	Salt. Lb.	Met. Tons.	Value.	Value per M. Ton.	Silver-bearing Ores. Value.	Sulphur or Brimstone (Crude). Long Tons.	Met. Tons.	Value.	Value per M. Ton.	Tin in Bars, Blocks, Pigs, or Grain, or Granulated. Lb.	Met. Tons.	Value.	Value per Met. Ton.	Zinc or Spelter, M'f'res. Value.
1893	1,155,217	524	$2,897	$5.53	$69,027	65	66	$1,360	$20.60	310,266	141	$63,580	$450.92	$570
1894	4,693,678	2,129	5,618	2.63	62,584	......	......	......	....	168,484	76	26,537	349.17	216
1895	3,116,595	1,414	6,500	4.59	377,983	220	224	3,685	16.45	295,456	134	63,584	474.50	2,875
1896	7,038,184	3,192	14,947	4.68	*Nil.*	484	492	8,535	17.34	289,266	131	41.874	319.64	215
1897	5,074,995	2,302	10,189	4.43	....	194	197	3,982	20.20	869,929	395	118,882	300.97	2,291

(*a*) From *Summary Statements of the Imports and Exports of the United States*..

(*b*) Includes lime.

(*c*) Ore, so called, consisting chiefly of matte.

(*d*) Sheets are not included these years, but are reported with manufactures.

(*e*) Total exports of coin and bullion; that is, includes both domestic and foreign not elsewhere specified.

(*f*) Only approximately correct. The Bureau of Statistics reports only the value of silver ores exported, but a much larger amount of silver leaves the country in copper matte which is classified as copper ore and no record is kept of its silver contents. In the above table the value of silver in copper matte so far as could be ascertained from the Director of the Mint has been added to the value of silver ores, the values being calculated at the commercial rate each year. The gold in copper matte exported is not included in the exports of gold given in the above table.

(*g*) Including nickel oxide and matte.

(*h*) Includes chlorate, muriate, and nitrate of potash, and all other salts of potash.

INDEX.

The Buyers' Manual

Preface.

THE advertising pages of the annual volumes of THE MINERAL INDUSTRY will well repay the careful perusal and study of every reader who wishes to be well informed upon the present condition of the mineral industry. They give an admirable and practical insight into the present state of the mining and metallurgic arts, for in them nearly every manufacturer or dealer of note in this country advertises the machines, appliances, and processes which are now in vogue, or which it is sought to introduce; while the names and specialties of the most eminent members of the engineering professions, as indicated in their cards, show the direction of modern mining and metallurgical progress.

These advertising pages are no less important to those who desire a clear knowledge of the means by which this country has come to be far the most important producer of minerals and metals than to those who wish to know where to get that full and reliable information concerning the values of properties, machinery, processes, and products which should precede the investment of capital.

Every country in the world is wisely striving to develop its mineral resources, and to build up its mineral industry, and in all of them this volume, which gives the latest practice in every department of the industry, has become indispensable. It is constantly consulted for the best technical skill and the most advantageous machinery and appliances in use. All enterprising manufactures of such wares appreciate this fact, and know that in no other way can they so effectively bring their goods before those who may need them as through the advertising pages of THE MINERAL INDUSTRY. These pages have become a veritable directory of the best in everything relating to the industry, and American, German and English manufacturers there compete for the orders of the whole world. $1,000,000,000 a year is certainly not an overestimate of the annual expenditure for technical skill, machinery and supplies used in the industry of which THE MINERAL INDUSTRY and *The Engineering and Mining Journal* are not only the chief but the only universal representatives published in any language.

The Publishers.

Buyers' Manual of The Mineral Industry.

Alphabetical Index.

Buyers' Manual of The Mineral Industry.

Classified Index.

Air and Gas Compressors.

Allis, Edw. P., Co.
Bullock, M. C., Mfg. Co.
Chester, E., & Co.
Davis, F. M., Iron Works Co.
Krupp, Fried., Grusonwerk.
Mine and Smelter Supply Co.
Rand Drill Co.
(See Machinery—Ventilating Machinery.)

Air Lift Pumps.

Allis, Edw. P., Co.
Chester, E. & Co.
Mine and Smelter Supply Co.
Rand Drill Co.

Aluminum.

(See Metals.)

Amalgamators.

Allis, Edw. P., Co.
Chester, E., & Co.
Davis, F. M., Iron Works Co.
Krupp, Fried., Grusonwerk.
Mecklenberg Iron Works.
Mine and Smelter Supply Co.
(See Machinery.)

Anti-Friction Metals.

Magnolia Metal Co.
Mine and Smelter Supply Co.
(See Metals.)

Antimony Ore.

(See Metals.)

Artists' Materials.

Devoe, F. W., & C. T. Raynolds Co.

Artesian Wells.

(See Machinery.)

Assayers.

Ledoux & Co.
Ricketts & Banks.
(See Chemists.)

Assayers' and Chemists' Supplies.

Dixon, Jos., Crucible Co.
Hoskins, W.
Mine and Smelter Supply Co.
Roessler & Hasslacher Chemical Co.

Assay Furnaces.

Allis, Edw. P., Co.
Chester, E., & Co.
Fraser & Chalmers, Ltd.
Hoskins, W.
Krupp, Fried., Grusonwerk.
Mine and Smelter Supply Co.
Roessler & Hasslacher Chemical Co.

Babbitt Metal.

Magnolia Metal Co.
Mine and Smelter Supply Co.
(See Metals.)

Balances.

(See Assayers' Supplies.)

Ballast Unloaders.

Lidgerwood Mfg. Co.

Bar Iron and Steel.

(See Metals—Iron and Steel.)

Barytes.

(See Paints.)

Batteries (Stamp).

Allis, Edw. P., Co.
Chester, E., & Co.
Davis, F. M., Iron Works Co.
Fraser & Chalmers, Ltd.
Krupp, Fried., Grusonwerk.
Mecklenberg Iron Works.
Mine and Smelter Supply Co.
(See Machinery.)

Battery Plates.

Allis, Edw. P., Co.
Chester, E., & Co.
Davis, F. M., Iron Works Co.
Fraser & Chalmers, Ltd.
Krupp, Fried., Grusonwerk.
Matthiessen & Hegeler Zinc Co.
Mecklenberg Iron Works.
Mine and Smelter Supply Co.
(See Amalgamators.)

Battery Screens.

(See Perforated Metals—Screens.)

Battery Zincs.

Matthiessen & Hegeler Zinc Co.

Belting (Link Belts, Chain Belts).

Allis, Edw. P., Co.
Chester, E., & Co.
Jeffrey Mfg. Co.
Krupp, Fried., Grusonwerk.
Mine and Smelter Supply Co.

Blast Furnaces.

(See Furnaces.)

Blasting Supplies.

Allis, Edw. P., & Co. Chester, E., & Co.
Fraser&Chalmers, Ltd. Mine and Smelter Supply Co.

Blowers and Exhausters.

Allis, Edw. P., Co. Davis, F. M., Iron Works Co.
Bacon, Earle C. Fraser & Chalmers, Ltd.
Chester, E., & Co. Krupp, Fried, Grusonwerk.
Mine and Smelter Supply Co.
(See Air Compressors, Fans, Machinery, Ventilators)

Blowpipes—Hydrocarbon.

Hoskins, Wm.

Boiler Compounds.

(See Mill, etc., Supplies.)

Boilers.

Allis, Edw. P., Co.
Bacon, Earle C.
Bullock, M. C. Mfg. Co.
Chester, Edward, & Co.
Davis, F. M., Iron Works Co.
Fraser & Chalmers, Ltd.
Krupp, Fried., Grusonwerk.
Lidgerwood Mfg. Co.
Mecklenberg Iron Works.
Mine and Smelter Supply Co.
(See Machinery.)

Boiler Covering.

(See Packing.)

Books.

(See Publications.)

Boots.

Chester, E., & Co. Jeffrey Mfg. Co.

Breakers.

(See Crushers and Machinery.)

Brick Machinery.

Allis, Edw. P., Co. Davis, F. M., Iron Works Co.
Chester, E., & Co. Fraser & Chalmers, Ltd.
Mine and Smelter Supply Co.

Brushes, Paint.

Devoe, F. W., & C. T. Raynolds Co.

Buckets (Ore and Water).

Allis, Edw. P., Co. Fraser & Chalmers, Ltd.
Chester, E., & Co. Jeffrey Mfg. Co.
Davis, F. M.,Iron Works Co. Mecklenberg Iron Works.
Mine and Smelter Supply Co.

Cable Conveyors, Cableways, Cable Tramways, Ropeways.

Allis, Edw. P., Co. Fraser & Chalmers, Ltd.
Chester, E., & Co. Jeffrey Mfg. Co.
Mine and Smelter Supply Co.

Cables.

Allis, Edw. P., Co. Fraser & Chalmers, Ltd.
Chester, E., & Co. Jeffrey Mfg. Co.

Cages and Skips.

Allis, Edw. P., Co. Fraser & Chalmers, Ltd.
Bacon, Earle C. Jeffrey Mfg. Co.
Chester, E., & Co. Krupp, Fried., Grusonwerk
Davis,F.M., IronWorks Co. Mecklenberg Iron Works.
Mine and Smelter Supply Co.
(See also Machinery.)

Cams.

Allis, Edw. P., Co. Fraser & Chalmers, Ltd.
Chester, E., & Co. Krupp, Fried.,Grusonwerk.
Davis, F. M., Iron Works. Mine & Smelter Supply Co.
(See Machinery.)

Cars.

Allis, Edw. P., Co. Fraser & Chalmers, Ltd..
Bacon, Earle C. Jeffrey Mfg. Co.
Chester, E., & Co. Krupp,Fried., Grusonwerk
Davis,F.M.,Iron Works Co. Mecklenberg Iron Works.
Mine and Smelter Supply Co.
(See Machinery.)

Car Unloaders.

Lidgerwood Mfg. Co.

Car Wheels.

Chester, E., & Co. Mecklenberg Iron Works.
Mine and Smelter Supply Co.
(See Cars.)

Castings.

Allis, Edw. P., Co. Davis, F. M., Iron Works Co.
Bacon, Earle C. Fraser & Chalmers, Ltd.
Chester, E., & Co. Krupp, Fried., Grusonwerk.
Mecklenberg Iron Works.
(See Machinery—Metals, Iron, Steel, and Brass.)

Chain Belting.

Jeffrey Mfg. Co.

(See Belting.)

Chains.

Allis, Edw. P., Co. Fraser & Chalmers, Ltd.
Bacon, Earle C. Jeffrey Mfg. Co.
Chester, E., & Co. Krupp, Fried.,Grusonwerk.
Davis,F.M.,IronWorks Co. Mecklenberg Iron Works.
Mine and Smelter Supply Co.

Chemical Manufacturers.

Roessler & Hasslacher Chemical Co.

Chemical Works' Machinery.

(See Machinery.)

Chemists.

Ledoux & Co. Ricketts & Banks.
Roessler & Hasslacher Chemical Co.
(See Assayers.)

Chemists' Apparatus and Supplies.

Hoskins, Wm. Mine and Smelter Supply Co.
Roessler & Hasslacher Chemical Co.

Chloride of Calcium.

Roessler & Hasslacher Chemical Co.

Chloride of Lime.

Roessler & Hasslacher Chemical Co.

Chlorination Plants.

Allis, Edw. P., Co.
Chester, E., & Co.
Davis, F. M., Iron Works Co.
Fraser & Chalmers, Ltd.
Krupp, Fried., Grusonwerk.
Mecklenberg Iron Works.
Mine and Smelter Supply Co.
(See Machinery.)

Chlorine, Liquid.

Roessler & Hasslacher Chemical Co.

Chrome Steel.

Allis, Edw. P., & Co.
Chester, E., & Co.
Davis, F. M., Iron Works Co.
Fraser & Chalmers, Ltd.
Krupp, Fried., Grusonwerk.
Mine and Smelter Supply Co.
(See Metals.)

Classifiers (Hydraulic).

Allis, Edw. P., Co.
Chester, E., & Co.
Fraser & Chalmers, Ltd.
Krupp. Fried., Grusonwerk.
Mine and Smelter Supply Co.

Clay-Working Machinery.

Allis, Edw. P., Co.
Bacon, Earle C.
Chester, E., & Co.
Fraser & Chalmers, Ltd.
Krupp, Fried., Grusonwerk.

Coal.

Berwind-White Coal Mining Co.
Castner, Curran & Bullitt.

Coal-Handling Machinery.

Allis, Edw. P., Co.
Bacon, Earle C.
Chester, E., & Co.
Fraser & Chalmers, Ltd.
Jeffrey Mfg. Co.
Krupp, Fried., Grusonwerk.
(See Machinery.)

Coal-Mining Machinery.

Allis, Edw. P., Co.
Bacon, Earle C.
Bullock, M. C., Mfg. Co.
Chester, E., & Co.
Fraser & Chalmers, Ltd.
Jeffrey Mfg. Co.
Krupp, Fried., Grusonwerk.
Mine and Smelter Supply Co.
Rand Drill Co.
(See Machinery.)

Coal-Washing Machinery.

Allis, Edw. P., Co.
Chester, E., & Co.
Fraser & Chalmers, Ltd.
Jeffrey Mfg. Co.
Krupp, Fried., Grusonwerk.
(See Machinery.)

Coke Ovens.

Allis, Edw. P., Co.
Fraser & Chalmers, Ltd.
Krupp, Fried., Grusonwerk.
(See Machinery.)

Coke-Works Equipments.

Allis, Edw. P., Co.
Fraser & Chalmers, Ltd.
Krupp, Fried., Grusonwerk.
(See Machinery.)

Compressors.

Allis, Edw. P., Co.
Bullock, M. C., Mfg. Co.
Chester, Edward, & Co.
Fraser & Chalmers, Ltd.
Krupp, Fried., Grusonwerk.
Mecklenberg Iron Works.
Mine and Smelter Supply Co.
Rand Drill Co.
(See Machinery.)

Concentrators.

Allis, Edw. P., Co.
Chester, E., & Co.
Davis, F. M., Iron Works Co.
Fraser & Chalmers, Ltd.
Krupp, Fried., Grusonwerk
Mecklenberg Iron Works.
Mine and Smelter Supply Co.
(See Machinery.)

Condensers.

(See Machinery.)

Contractors' Supplies.

Allis, Edw. P., Co.
Bacon, Earle C.
Bullock, M. C., Mfg. Co.
Chester, E., & Co.
Davis, F. M., Iron Works Co.
Jeffrey Mfg. Co.
Krupp, Fried., Grusonwerk.
Mecklenberg Iron Works.
Mine and Smelter Supply Co.
Rand Drill Co.

Converters.

Allis, Edw. P., Co.
Chester, E., & Co.
Fraser & Chalmers, Ltd.
Krupp, Fried., Grusonwerk.
Mecklenberg Iron Works.
Mine and Smelter Supply Co.
(See Machinery.)

Conveying Belts.

Allis, Edw. P., Co.
Chester, E., & Co.
Jeffrey Mfg. Co.
Mine and Smelter Supply Co.
(See Elevating and Conveying Machinery.)

Conveying Machinery.

(See Elevating and Conveying Machinery.)

Copper.

(See Metals.)

Copper Bottoms.

Lewisohn Bros.
(See Metals.)

Copper Converters.

(See Converters.)

Copper Dealers and Producers.

(See Metals—Copper.)

Copper Oxide.

(See Oxides.)

Copper Precipitate.

(See Metals—Copper.)

Copper Pyrites Ore.

Eustis Mining Co.

Copper Sheets.

(See Metals—Copper.)

Copper Sulphate.

(See Metals—Copper.)

Copper Tubes, Corrugated.

(See Metals—Copper.)

Copper Wire.

(See Metals.)

Cranes.

(See Elevating and Conveying Machinery.)

Crucibles.

Dixon, Jos., Crucible Co.
Hoskins, Wm.
Mine and Smelter Supply Co.
Roessler & Hasslacher Chemical Co.
(See Assayers' and Chemists' Supplies.)

Crusher Plates.

Allis, Edw. P., Co.
Bacon, Earle C.
Chester, E., & Co.
Davis, F. M., Iron Works Co.
Fraser & Chalmers, Ltd.
Krupp, Fried., Grusonwerk.
Mine and Smelter Supply Co.
(See Machinery.)

Crusher Rolls.

Allis, Edw. P., Co.
Bacon, Earle C.
Chester, Edward, & Co.
Davis, F. M., Iron Works Co.
Fraser & Chalmers, Ltd.
Krupp, Fried., Grusonwerk.
Mine and Smelter Supply Co.
(See Machinery.)

Crushers.

Allis, Edw. P., Co.
Bacon, Earle C.
Chester, Edward, & Co.
Davis, F. M., Iron Works Co.
Fraser & Chalmers, Ltd.
Krupp, Fried., Grusonwerk.
Mecklenberg Iron Works.
Mine and Smelter Supply Co.
(See Machinery.)

Cyanide Mills.

Allis, Edw. P., Co.
Chester, E., & Co.
Fraser & Chalmers, Ltd.
Krupp, Fried., Grusonwerk.
Mine and Smelter Supply Co.
(See Machinery.)

Cyanide of Potassium.

Roessler & Hasslacher Chemical Co.
(See Chemicals.)

Cyanide Tanks.

Allis, Edw. P., Co.
Chester, E., & Co.
Mine and Smelter Supply Co.

Diamond Drills.

Allis, Edw. P., Co.
Bullock, M. C., Mfg. Co.
Chester, E., & Co.
Fraser & Chalmers, Ltd.
Mine and Smelter Supply Co.
(See Drills.)

Dioxide of Sodium.

Roessler & Hasslacher Chemical Co.
(See Chemicals.)

Disintegrators.

Allis, Edw. P., Co.
Bacon, Earle C.
Chester, E., & Co.
Davis, F. M., Iron Works Co.
Fraser & Chalmers, Ltd.
Jeffrey Mfg. Co.
Krupp, Fried., Grusonwerk.
Mecklenberg Iron Works.
Mine and Smelter Supply Co.
(See Pulverizers.)

Drawing Materials.

Devoe, F. W., & C. T. Raynolds Co.
(See Mathematical Instruments.)

Dredging Machinery.

Allis, Edw. P., Co.
Chester, E., & Co.
Fraser & Chalmers, Ltd.
Jeffrey Mfg. Co.
Mine and Smelter Supply Co.
(See Machinery.)

Drills.

Allis, Edw. P., Co.
Bullock, M. C., Mfg. Co.
Chester, Edward, & Co.
Davis, F. M., Iron Works Co.
Fraser & Chalmers, Ltd.
Jeffrey Mfg. Co.
Krupp, Fried., Grusonwerk.
Mine and Smelter Supply Co.
Rand Drill Co.
(See Machinery.)

Drill Steel.

(See Metals—Mine Supplies.)

Drying and Calcining Machinery.

Allis, Edw. P., Co.
Chester, E., & Co.
Fraser & Chalmers, Ltd.
Jeffrey Mfg. Co.
Krupp, Fried., Grusonwerk.
Mine and Smelter Supply Co.
(See Machinery.)

Dumping Cars.

(See Cars.)

Dynamite.

(See Explosives.)

Dynamos.

Allis, Edw. P., Co.
Chester, E., & Co.
Fraser & Chalmers, Ltd.
Jeffrey Mfg. Co.
Mine and Smelter Supply Co.
(See Machinery.)

Educational Institutions.

Massachusetts Institute of Technology.

(See Schools.)

Electric Coal Mining Machines.

Allis, Edw. P., Co.
Bacon, Earle C.
Bullock, M. C., Mfg. Co.
Fraser & Chalmers, Ltd.
Jeffrey Mfg. Co.
Krupp, Fried., Grusonwerk.
Mill and Smelter Supply Co.

(See Coal Mining Machinery.)

Electric Conveyors.

(See Conveying Machinery.)

Electric Drills.

(See Drills.)

Electric Machinery and Supplies.

(See Machinery.)

Elevating and Conveying Machinery.

Allis, Edw. P., Co.
Bacon, Earle C.
Bullock, M. C., Mfg. Co.
Chester, Edward, & Co.
Davis, F. M., Iron Works Co.
Fraser & Chalmers, Ltd.
Jeffrey Manufacturing Co.
Krupp, Fried., Grusonwerk.
Lidgerwood Mfg. Co.
Mine and Smelter Supply Co.

(See Machinery.)

Engineering Instruments.

Devoe, F. W., & C. T. Raynolds Co.

Engines.

Allis, Edw. P., Co.
Bacon, Earle C.
Bullock Mfg. Co.
Chester, Edward, & Co.
Davis, F. M., Iron Works Co.
Fraser & Chalmers, Ltd.
Jeffrey Mfg. Co.
Krupp, Fried., Grusonwerk.
Lidgerwood Mfg. Co.
Mecklenberg Iron Works.
Mine and Smelter Supply Co.
Rand Drill Co.

(See Machinery.)

Engravers.

Bradley & Poates.

Etching Plates.

Matthiessen & Hegeler Zinc Co.

Excavating Machinery.

(See Steam Shovels—Machinery.)

Explosives.

Allis, Edw. P., Co.
Chester, E., & Co.
Fraser & Chalmers, Ltd.
Mine and Smelter Supply Co.

Fans.

(See Machinery and Ventilating Machinery.)

Feeders.

Allis, Edw. P., Co.
Bacon, Earle C.
Chester, E., & Co.
Davis, F. M., Iron Works Co.
Fraser & Chalmers, Ltd.
Jeffrey Mfg. Co.
Krupp, Fried., Grusonwerk.
Mecklenberg Iron Works.
Mine and Smelter Supply Co.

(See Ore Feeders—Quicksilver Feeders—Machinery.)

Feed-Water Heaters.

(See Machinery.)

Feed-Water Purifiers.

(See Machinery.)

Ferro-Nickel.

Orford Copper Co.

(See Metals.)

Fertilizer Machinery.

(See Machinery.)

Files.

(See Tools.)

Filters.

(See Machinery.)

Fire Brick.

Chester, E., & Co.
Hoskins, Wm.
Mine and Smelter Supply Co.

Fire Clay.

(See Fire Brick.)

Flexible Shafts.

(See Machinery.)

Forgings.

(See Metals—Iron and Steel.)

Franklinite Ore.

New Jersey Zinc Co.

(See Ore and Zinc Ore.)

Furnaces.

Allis, Edw. P., Co.
Chester, E., & Co.
Davis, F. M., Iron Works Co.
Fraser & Chalmers, Ltd.
Hoskins, Wm.
Krupp, Fried., Grusonwerk.
Mecklenberg Iron Works.
Mine and Smelter Supply Co.
Nichols Chemical Co.
Roessler & Hasslacher Chemical Co.

(See Assay Furnaces and Machinery.)

Fuse.

(See Explosives and Mill, etc., Supplies.)

Gas and Gasoline Engines.

(See Machinery.)

Gas Producers.

Allis, Edw. P., Co.
Chester, E., & Co.
Fraser & Chalmers, Ltd.
Mine and Smelter Supply Co

Gauges, Recording.

(See Machinery.)

Gearing.

(See Machinery.)

Gold.

(See Metals.)

Graphite.

Dixon, Jos., Crucible Co.

Grease Cups.

(See Lubricators.)

Haulage Machinery.

(See Machinery.)

Hardware, Miscellaneous.

Allis, Edw. P., Co.
Bacon, Earle C.
Bullock, M. C., Mfg. Co.
Chester, E., & Co.
Davis, F. M., Iron Works Co.
Fraser & Chalmers, Ltd.
Jeffrey Mfg. Co.
Krupp, Fried., Grusonwerk.
Mecklenburg Iron Works.
Mill and Smelter Supply Co.

Hoisting Machinery.

Allis, Edw. P., Co.
Bacon, Earle C.
Bullock, M. C., Mfg. Co.
Chester, Edward, & Co.
Davis, F. M., Iron Works Co.
Fraser & Chalmers, Ltd.
Jeffrey Mfg. Co.
Krupp, Fried., Grusonwerk.
Lidgerwood Mfg. Co.
Mecklenberg Iron Works.
Mine and Smelter Supply Co.
Rand Drill Co.
(See Machinery.)

Hydraulic Machinery.

Allis, Edw. P., Co.
Chester, Edw., & Co.
Fraser & Chalmers, Ltd.
Mecklenberg Iron Works.
Mine and Smelter Supply Co.
(See Machinery.)

Hyposulphite of Lime.

(See Chemicals.)

Hyposulphite of Soda.

Roessler & Hasslacher Chemical Co.
(See Chemicals.)

Insulated Wires and Cables.

(See Wire and Wire Cables—Electrical Supplies.)

Iron.

(See Metals.)

Iron Ore.

Spanish American Iron Co.
(See Metals—Iron.)

Jigs.

Allis, Edw. P., Co.
Chester, E., & Co.
Davis, F. M., Iron Works Co.
Fraser & Chalmers, Ltd.
Krupp, Fried., Grusonwerk.
Mecklenberg Iron Works.
Mine and Smelter Supply Co.
(See Concentrators.)

Lamps, Miners', Safety, Etc.

Allis, Edw. P., Co.
Chester, E., & Co.
Fraser & Chalmers, Ltd.
Mine and Smelter Supply Co.

Lead.

(See Metals.)

Lead Linings (Chemical and Chlorinating).

(See Mill, etc., Supplies.)

Lead Oxide.

(See Oxides.)

Link Belts.

Allis, Edw. P., Co.
Chester, E., & Co.
Fraser & Chalmers, Ltd.
Jeffrey Mfg. Co.
Mine and Smelter Supply Co.
(See Belting—Machinery.)

Litharge.

(See Assay Furnaces—Apparatus and Supplies—Chemicals.)

Lithographer's Plates.

Matthiessen & Hegeler Zinc Co.

Locomotives.

Allis, Edw. P., Co.
Fraser & Chalmers, Ltd.
Jeffrey Mfg. Co.
Mine and Smelter Supply Co.
(See Cars and Machinery.)

Lubricants.

Dixon, Jos., Crucible Co.
(See Mill, etc., Supplies.)

Lubricating Oils.

(See Oils.)

Lubricators, Oilers and Grease Cups.

(See Mill, etc., Supplies.)

Machinery.

(Makers and dealers in Mining, Smelting and other Machinery and Supplies.)

Allis, Edw. P., Co.
Bacon, Earle C.
Bullock, M. C., Mfg. Co.
Chester, Edward, & Co.
Davis, F. M., Iron Works Co.
Fraser & Chalmers, Ltd.
Hoskins, Wm.
Jeffrey Mfg. Co.
Krupp, Fried., Grusonwerk.
Lidgerwood Mfg. Co.
Mecklenberg Iron Works.
Mine and Smelter Supply Co.
Nichols Chemical Co.
Rand Drill Co.
White, Edw. F.

Machine Tools and Supplies.

Allis, Edw. P., Co.
Bacon, Earle C.
Chester, Edw., & Co.
Davis, F. M., Iron Works Co.
Fraser & Chalmers, Ltd.
Jeffrey Mfg. Co.
Mecklenberg Iron Works.
Mine and Smelter Supply Co.

Machinists.

Allis, Edw. P., Co.
Bacon, Earle C.
Chester, Edw., & Co.
Davis, F. M., Iron Works Co.
Fraser & Chalmers, Ltd.
Jeffrey Mfg. Co.
Krupp, Fried., Grusonwerk.
Mecklenberg Iron Works.
Mine and Smelter Supply Co.

Magnolia Metal.

Magnolia Metal Co.
Mine and Smelter Supply Co.

Mathematical Instruments.

Devoe, F. W., & C. T. Raynolds Co.
(See Drawing Materials.)

Matte.

American Metal Co.
Balbach Smelting and Refining Co.
Bath, Henry, & Son.
Boston & Colorado Smelting Co.
Ledoux & Co.
Lewisohn Bros.
Mountain Copper Co.
Nichols Chemical Co.
Omaha & Grant Smelting Co.
Orford Copper Co.
Ricketts & Banks.
(See Metals - Ores.)

Metal Brokers and Dealers.

(See Metals.)

Metallurgical Works and Ore Purchasers

American Metal Co.
Balbach Smelting and Refining Co.
Bath, Henry, and Son.
Boston & Colorado Smelting Co.
Ledoux & Co.
Lewisohn Bros.
Matthiessen & Hegeler Zinc Co.
Omaha & Grant Smelting Co.
Orford Copper Co,
Ricketts & Banks.

Metallurgists.

Ledoux & Co.
Ricketts & Banks.
(See Professional Directory.)

Metals.

ALUMINUM.

American Metal Co.
Bath, Henry & Son.

ANTIMONY.

American Metal Co.
Bath, Henry, & Son.

BEARING METALS.

Allis, Edw. P., Co.
Magnolia Metal Co.
Mine and Smelter Supply Co.

COPPER.

American Metal Co.
Arizona Copper Co.
Atlantic Mining Co.
Balbach Smelting and Refining Co.
Bath, Henry, & Son.
Boston & Colorado Smelting Co.
Canadian Copper Co,
Copper Queen Consolidated Mining Co.
Detroit Copper Mining Co.
Elliott's Metal Co., Ltd.
Eustis Mining Co.
Lewisohn Bros.
Montana Ore Purchasing Co.
Mountain Copper Co.
Nichols Chemical Co.
Omaha & Grant Smelting Co.
Orford Copper Co.
Phelps, Dodge & Co.
Stanton, John.
Wolverine Copper Mining Co.

FERROMANGANESE (See SPIEGELEISEN).

American Metal Co.
New Jersey Zinc Co.

GOLD.

Balbach Smelting and Refining Co.
Bath, Henry, & Son.
Boston & Colorado Smelting Co.
Elliott's Metal Co., Ltd.
Montana Ore Purchasing Co.
Omaha & Grant Smelting Co.

IRON (See IRON ORE).

Bath, Henry, & Son.
Krupp, Fried., Grusonwerk.
Spanish-American Iron Co.

LEAD.

American Metal Co.
Balbach Smelting and Refining Co.
Bath, Henry, & Son.
Elliott's Metal Co., Ltd.
Lewisohn Bros.
Omaha & Grant Smelting Co.

NICKEL.

American Metal Co.
Canadian Copper Co.
Bath, Henry, & Son.
Orford Copper Co.

PLATINUM.

Bath, Henry, & Son.

QUICKSILVER.

Mine and Smelter Supply Co.

SILVER.

American Metal Co.
Balbach Smelting & Refining Co.
Bath, Henry, & Son.
Boston & Colorado Smelting Co.
Elliott's Metal Co., Ltd.
Montana Ore Purchasing Co.
Omaha & Grant Smelting Co.
Orford Copper Co.

SPELTER (See ZINC).

American Metal Co.
Lewisohn Bros.
Bath, Henry, & Son.
New Jersey Zinc Co.

SPIEGELEISEN (See FERROMANGANESE).

New Jersey Zinc Co.

Steel.

Allis, Edw. P., Co.
Bath, Henry, & Son.
Fraser & Chalmers, Ltd.
Krupp, Fried., Grusonwerk

Tin.

American Metal Co.
Bath, Henry, & Son.
Lewisohn Bros.

Yellow Metal.

Elliott's Metal Co., Ltd.

Zinc (See Spelter).

American Metal Co.
Bath, Henry, & Son.
Lewisohn Bros.
Matthiessen & Hegeler Zinc Co.
New Jersey Zinc Co.

Mill, Factory, Smelter and Mine Supplies.

Allis, Edw. P., Co.
Bacon, Earle C.
Bullock, M. C., Mfg. Co
Chester, E., & Co.
Davis, F. M., Iron Works Co.
Dixon, Jos., Crucible Co.
Fraser & Chalmers, Ltd.
Hoskins, Wm.
Jeffrey Mfg. Co.
Krupp, Fried., Grusonwerk.
Lidgerwood Mfg. Co.
Mecklenberg Iron Works.
Mine and Smelter Supply Co.
Rand Drill Co.

Mills.

(See Stamp Mills—Machinery.)

Millstones.

(See Mill, Factory, Smelter, and Mine Supplies.)

Mine Cars and Car Wheels.

Allis, Edw. P., Co.
Bacon, Earle C.
Chester, E., & Co.
Davis, F. M., Iron Works Co.
Fraser & Chalmers, Ltd.
Jeffrey Mfg. Co.
Krupp, Fried., Grusonwerk.
Lidgerwood Mfg. Co.
Mecklenberg Iron Works.
Mill and Smelter Supply Co.
(See Cars.)

Mine Supplies.

(See Mill, etc., Supplies.)

Mine Harness.

(See Mill, etc., Supplies.)

Miners' Lamps.

(See Lamps.)

Mining Companies.

Atlantic Mining Co.
Canadian Copper Co.
Copper Queen Consolidated Mining Co.
Detroit Copper Mining Co.
Montana Ore Purchasing Co.
Mountain Copper Co.
Wolverine Copper Mining Co.

Mining Machinery, General.

Allis, Edward P., Co.
Bacon, Earle C.
Bullock, M. C., Mfg. Co.
Chester, Edward, & Co.
Davis, F. M., Iron Works Co.
Fraser & Chalmers, Ltd.
Hoskins, Wm.
Jeffrey Mfg. Co.
Krupp, Fried., Grusonwerk.
Lidgerwood Mfg. Co.
Mecklenberg Iron Works.
Mine and Smelter Supply Co.
Rand Drill Co.

Motors.

(See Machinery.)

Allis, Edw. P., Co.
Fraser & Chalmers, Ltd
Jeffrey Mfg. Co.

Nails.

(See Mill, etc., Supplies.)

Nickel.

(See Metals.)

Nickel Oxide.

Orford Copper Co.

Nitrate of Soda.

Bath, Henry, & Son.

Oils and Greases, Illuminating and Lubricating.

Dixon, Jos., Crucible Co.
(See Mill, etc., Supplies.)

Ore Breakers.

Allis, Edw. P., Co.
Bacon, Earle C.
Chester, E., & Co.
Davis, F. M., Iron Works.
Fraser & Chalmers, Ltd.
Krupp, Fried., Grusonwerk.
Mecklenberg Iron Works.
Mine and Smelter Supply Co.
(See Breakers—Crushers—Machinery.)

Ore Buyers.

American Metal Co.
Balbach Smelting and Refining Co.
Bath, Henry, & Son.
Boston & Colorado Smelting Co.
Ledoux & Co.
Lewisohn Bros.
Mariner & Hoskins.
Montana Ore Purchasing Co.
Nichols Chemical Co.
Omaha & Grant Smelting Co.
Orford Copper Co.
Ricketts & Banks.
(See Sampling Works and Smelters.)

Ore Cars.

Allis, Edw. P., Co.
Chester, E., & Co.
Fraser & Chalmers, Ltd.
Jeffrey Mfg. Co.
Krupp, Fried., Grusonwerk.
Mecklenberg Iron Works.
Mine and Smelter Supply Co.
(See Cars and Machinery.)

Ore Concentrators.

(See Concentrators—Machinery.)

Ore-Dressing Machinery.

(See Concentrators.)

Ore Feeders.

Allis, Edw. P., Co.
Bacon, Earle C.
Chester. E., & Co.
Fraser & Chalmers, Ltd.
Jeffrey Mfg. Co.
Krupp, Fried., Grusonwerk.
Mecklenberg Iron Works.
Mine and Smelter Supply Co.
(See Feeders and Machinery.)

Ore-Handling Machinery.

(See Machinery.)

Ore Storage.

Ledoux & Co.

Ore Roasters.

(See Furnaces—Roasting Furnaces.)

Ore Samplers.

(See Machinery—Sampling Machinery.)

Ore-Testing Works.

Ledoux & Co.
Ricketts & Banks.
(See Sampling and Testing Works.)

Ore Washers.

(See Machinery.)

Oxides.

New Jersey Zinc Co.
Orford Copper Co.
(See Copper Oxide—Lead Oxide.)

Packings.

(See Rubber Goods—Mechanical, Mill and Mine Supplies—Machinery.)

Paints.

Devoe, F. W., & C. T. Raynolds Co.
New Jersey Zinc Co.

Periodicals.

(See Publications.)

Perforated Metals.

Allis, Edw. P., Co.
Chester, E., & Co.
Fraser & Chalmers, Ltd.
Jeffrey Mfg. Co.
Krupp, Fried., Grusonwerk.
Mine and Smelter Supply Co.
(See Machinery—Screens.)

Peroxide of Sodium.

Roessler & Hasslacher Chemical Co.
(See Chemicals.)

Picks.

(See Mill, etc., Supplies.)

Pile Drivers.

Lidgerwood Mfg. Co.
(See Machinery.)

Pipe.

Allis, Edw. P., Co.
Fraser & Chalmers, Ltd.
Chester, E., & Co.
Krupp, Fried., Grusonwerk.
Mine and Smelter Supply Co.
(See Tubes.)

Pipe Machinery.

(See Machinery.)

Placer Machinery.

Allis, Edw. P., Co.
Fraser & Chalmers, Ltd.
Mine and Smelter Supply Co.
(See Machinery.)

Platinum.

(See Metals.)

Plumbago.

Dixon, Jos., Crucible Co.
(See Graphite.)

Power Transmission Machinery.

(See Machinery.)

Pressure Gauges.

(See Machinery.)

Processes.

Allis, Edward P., Co.
Chester, E., & Co.
Davis, F. M., Iron Works Co.
Fraser & Chalmers, Ltd.
Krupp, Fried., Grusonwerk.
Mecklenberg Iron Works.
Mine and Smelter Supply Co.
(See Machinery.)

Prospecting Drills.

(See Drills.)

Publications.

Canadian Ice Age.
Chemical and Geological Essays.
Columbian Parliamentary Compend or Rules for Debate.
Cyanide Process, Practical Notes on.
Engineering and Mining Journal.
Florida, South Carolina and Canadian Phosphates.
Gems and Precious Stones of North America.
Lead and Copper Smelting and Copper Converting.
Lead and Zinc Mining Industry of Missouri and Kansas
Manufacture and Properties of Structural Steel.
Matte Smelting.
Metallurgy of Lead.
Metallurgy of Steel.
Mineral Industry (Annual): An Encyclopædia of Mining and Metallurgy.
  Vol. I. From Earliest Times to the End of 1892.
  Vol. II. Supplementing Vol. I., 1893.
  Vol. III. " Vols. I.-II., 1894.
  Vol. IV. " Vols. I.-III., 1895.
  Vol. V. " Vols. I.-IV., 1896.
  Vol. VI. " Vols. I.-V., 1897.
Mining and General Telegraphic Code.
Modern Copper Smelting.
New Basis for Chemistry.
Ore deposits of the United States.
Phosphates of America.
Qualitative Analysis, An Outline of.
Qualitative Blowpipe Analysis, A Manual of.
Stamp Milling of Gold Ores.
Systematic Mineralogy.
Universal Bimetallism.

Publishers.
Scientific Publishing Co.

Pulsometers.
(See Pumps—Machinery.)

Pulverizers.
(See Crushers—Machinery.)

Pumps.
Allis, Edw. P., Co.
Chester, Edward, & Co.
Fraser & Chambers, Ltd.
Krupp, Fried., Grusonwerk.
Mecklenberg Iron Works.
Mine and Smelter Supply Co.
(See Machinery.)

Pyrites.
Eustis Mining Co.

Quarrying Machinery.
Allis, Edw. P., Co.
Bacon, Earle C.
Bullock, M. C., Mfg. Co.
Chester, E., & Co.
Davis, F. M., Iron Works Co.
Fraser & Chalmers, Ltd.
Jeffrey Mfg. Co.
Krupp, Fried., Grusonwerk.
Mecklenberg Iron Works.
Mine and Smelter Supply Co.
Rand Drill Co.
(See Machinery.)

Quartz Mills.
Allis, Edw. P., Co.
Bacon, Earle C.
Chester, E., & Co.
Davis, F. M., Iron Works Co.
Fraser & Chalmers, Ltd.
Krupp, Fried., Grusonwerk.
Mine and Smelter Supply Co.
(See Machinery.)

Quicksilver Feeders, Furnaces, etc.
(See Machinery.)

Rails.
(See Metals—Iron and Steel.)

Railways.
(See Tramways.)

Railway Equipment and Supplies.
Allis, Edw. P., Co.
Bacon, Earle C.
Fraser & Chalmers, Ltd.
Krupp, Fried., Grusonwerk.

Refineries.
Boston & Colorado Smelting Co.
Ledoux & Co.
Nichols Chemical Co.
Omaha & Grant Smelting Co.
Ricketts & Banks.
(See Smelters.)

Regulators, Dampers, etc.
(See Mill, etc., Supplies.)

Retorts.
(See Assay Supplies—Mill Supplies.)

Roasting Furnaces.
Allis, Edw. P., Co.
Chester, E., & Co.
Davis, F. M., Iron Works Co.
Fraser & Chalmers, Ltd.
Krupp, Fried., Grusonwerk.
Mecklenberg Iron Works.
Mine and Smelter Supply Co.
Nichols Chemical Co.
(See Furnaces.)

Rock Breakers.
(See Breakers—Crushers—Ore Breakers—Machinery.)

Rock Drills.
(See Drills—Machinery.)

Roofing.
(See Mill, etc., Supplies.)

Rope.
(See Cables.)

Rubber Goods.
Allis, Edw. P., Co.
Fraser & Chalmers, Ltd.
Jeffrey Mfg. Co.
Mine and Smelter Supply Co

Safety Lamps.
(See Lamps.)

Sampling and Testing Works.
Boston & Colorado Smelting Co.
Ledoux & Co.
Lewisohn Bros.
Mariner & Hoskins.
Omaha & Grant Smelting Co.
Ricketts & Banks.

Sampling Machinery.
Allis, Edw. P., Co.
Bacon, Earle C.
Chester, E., & Co.
Davis, F. M., Iron Works Co.
Fraser & Chalmers, Ltd.
Krupp, Fried., Grusonwerk.
Mine and Smelter Supply Co.
(See Machinery.)

Saw Mill Machinery.
Allis, Edw. P., Co.
Bacon, Earle C.
Chester, E., & Co.
Fraser and Chalmers, Ltd.
Mecklenberg Iron Works.
Mine and Smelter Supply Co.
(See Machinery.)

Schools and Colleges.
Massachusetts Institute of Technology.
(See Educational Institutions.)

Screens.
Allis, Edw. P., Co.
Davis, F. M., Iron Works Co.
Fraser & Chalmers, Ltd.
Jeffrey Mfg. Co.
Krupp, Fred., Grusonwerk.
Mecklenberg Iron Works.
Mine and Smelter Supply Co.
(See Perforated Metals.)

Sectional Track.
(See Machinery.)

Shafting and Pulleys.

Allis, Edw. P., Co.
Bacon, Earle C.
Davis, F. M., Iron Works Co.
Fraser & Chalmers, Ltd.
Jeffrey Mfg. Co.
Krupp, Fried., Grusonwerk.
Mecklenberg Iron Works.
Mine and Smelter Supply Co.
(See Machinery.)

Sheet Copper.

(See Metals.)

Sheet Lead.

(See Metals.)

Shoes and Dies.

Allis, Edw. P., Co.
Bacon, Earle C.
Chester, Edw., & Co.
Davis, F. M., Iron Works Co.
Krupp, Fried., Grusonwerk.
Mine and Smelter Supply Co.
(See Mill Supplies—Machinery.)

Shovels, Hand.

(See Mill, etc., Supplies.)

Shovels, Steam.

(See Steam Shovels.)

Silver.

(See Metals.)

Skips.

(See Cages and Skips—Machinery.)

Smelting Furnaces.

(See Furnaces.)

Smelting Works.

Balbach Smelting and Refining Co.
Boston & Colorado Smelting Co.
Canadian Copper Co.
Elliott's Metal Co., Ltd.
Lewisohn Bros.
Ledoux & Co.
Matthiessen & Hegeler Zinc Co.
Montana Ore Purchasing Co.
Nichols Chemical Co.
Omaha & Grant Smelting Co.
Orford Copper Co.
Ricketts & Banks.
(See Refineries.)

Spelter.

(See Metals.)

Spiegeleisen.

(See Metals.)

Sprocket Wheels.

Jeffrey Mfg. Co.
(See Machinery.)

Stamp Mill Machinery.

Allis, Edw. P., Co.
Bacon, Earle C.
Chester, Edward, & Co.
Davis, F. M., Iron Works Co.
Fraser & Chalmers. Ltd.
Krupp, Fried., Grusonwerk.
Mecklenberg Iron Works.
Mine and Smelter Supply Co.
(See Machinery.)

Steam Separators.

(See Machinery.)

Steam Shovels.

(See Dredges—Machinery.)

Steel.

(See Metals.)

Steel Cams.

Allis, Edw. P., Co.
Chester, Edw., & Co.
Fraser & Chalmers, Ltd.
Krupp, Fried., Grusonwerk.
Mine and Smelter Supply Co.
(See Machinery.)

Storage of Ore.

Ledoux & Co.

Stove Blanks (Zinc).

Matthiessen & Hegeler Zinc Co.

Structural Iron and Steel.

(See Corrugated Iron and Steel.)

Sulphur

Eustis Mining Co.
(See Brimstone—Chemicals.)

Sulphur Apparatus.

White, Edward F.

Sulphuric Acid.

Matthiessen & Hegeler Zinc Co.
(See Chemicals.)

Tanks.

(See Mill, etc., Supplies.)

Tappets.

(See Stamp Mills—Machinery.)

Testing Works.

(See Sampling and Testing Works.)

Tin.

(See Metals.)

Tipples.

(See Machinery.)

Tool Steel.

(See Metals—Steel.)

Tools.

(See Mill, etc., Supplies.)

Tramways.

Allis, Edw. P., Co.
Fraser & Chalmers, Ltd.
Jeffrey Mfg. Co.
Krupp, Fried., Grusonwerk.
Lidgerwood Mfg. Co.
Mine and Smelter Supply Co.
(See Cableways—Machinery.)

Tubes—Brass, Copper, Iron, Steel.

Elliott's Metal Co., Ltd.
(See Pipe.)

Turbines and Waterwheels.

(See Machinery.)

Valves.

(See Machinery.)

Valves, Rubber.

(See Rubber Goods.)

Vanners.

(See Concentrators--Machinery.)

Varnishes.

Devoe, F. W., & C. T. Raynolds Co.

Ventilators.

Allis, Edw. P., Co.
Bullock, M. C., Mfg. Co.
Chester, Edward, & Co.
Davis, F. M., Iron Works Co.
Fraser & Chalmers, Ltd.
Krupp, Fried., Grusonwerk.
Mine and Smelter Supply Co.
(See Blowers—Fans.)

Washboard Blanks (Zinc).

Matthiessen & Hegeler Zinc Co.

Waterwheels and Turbines.

Allis Edw P., Co.
Fraser & Chalmers, Ltd.
Krupp, Fried., Grusonwerk.
(See Machinery.)

Weights.

Ricketts & Banks.

Well Drilling Machinery.

(See Machinery.)

Wheelbarrows.

Allis, Edw. P., Co.
Chester, Edward, & Co.
Fraser & Chalmers, Ltd.
Jeffrey Mfg. Co.
Mine and Smelter Supply Co.
(See Mine Supplies.)

Wheels, Car.

(See Cars.)

Whims, Hoists.

Allis, Edw. P., Co.
Davis, F. M., Iron Works Co.
Fraser & Chalmers, Ltd.
Mine and Smelter Supply Co.

White Lead.

(See Paints.)

Wire and Wire Rope, Cables.

Allis, Edw. P., Co.
Fraser & Chalmers, Ltd.
Jeffrey Mfg. Co.
Lidgerwood Mfg. Co.
(See Cables—Machinery.)

Wire Cloth.

(See Screens.)

Wire Rope Tramways.

(See Ropeways—Cableways.)

Wooden Pipe.

(See Pipe.)

Wrought Iron.

(See Metals, Iron.)

Yellow Metal.

Elliott's Metal Co., Ltd.

Zinc.

(See Metals.)

Zinc Oxide, Zinc White.

New Jersey Zinc Co.
(See Paints.)

ORFORD COPPER CO.,

ROBERT M. THOMPSON, President,

37 WALL STREET, NEW YORK.

COPPER AND NICKEL SMELTERS,

WORKS AT CONSTABLE'S HOOK, N. J.

OPPOSITE NEW BRIGHTON, STATEN ISLAND.

Copper and Nickel Ore, Mattes or Bullion Purchased.

Advances Made on Consignments for Refining and Sale.

Specialty Made of Silver-Bearing Ores and Mattes.

COPPER INGOTS, WIRE BARS AND CAKES.

Malleable Nickel, Shots, Plates, Ingots, Bars, Sheets, Wire.

BEST QUALITY FOR

Anodes, German Silver and Nickel-Steel for Armor Plates.

LEWISOHN BROTHERS,

81 and 83 Fulton Street, New York.

P. O. Box 1247. **Cable Address "Lohengrin."**

DEALERS IN

Lake Superior Copper, Spelter, Tin, Lead

PRODUCERS OF BEST

Electrolytic Cathodes, Wire Bars, Cakes and Ingots,
"N. E. C." Brand.
Arizona Ingots, Cakes and Bars,
"A. C. C." and "A. B. S." Brands.

ALSO

Superior Casting Copper,
"M. A." Brand.

SOLE AGENTS FOR THE FOLLOWING MINING COMPANIES:

Boston & Montana Consolidated Copper and Silver Mining Companies.
Butte & Boston Cons. Mining Company. **Arizona Copper Company, Limited.**
Tamarack Mining Company. **Osceola Consolidated Mining Company.**
Old Dominion Copper Mining and Smelting Company.

AND FOR THE

Tamarack-Osceola Copper Manufacturing Company's Copper Wire, Sheet Copper and Copper Bottoms.

ALSO SOLE SELLING AGENTS FOR THE

CHEROKEE-LANYON SPELTER COMPANY.

MAKERS OF THE FOLLOWING BRANDS:

Cherokee. Robt. Lanyon & Co. S. H. Lanyon & Bro. Rich Hill. Pittsburg & St. Louis. Girard. Columbia. Scammon.

Refining Works for the treatment of Aurifereus-Argentiferous Copper Ores and Mattes and all Copper Material, at

CENTRAL FALLS, ANSONIA, CONN.

Advances Made on all kinds of Copper Material.

Magnolia Anti-Friction Metal.

Best Anti-Friction Metal for Rock Crushers, Stamp Mills, Pulverizing Machinery, Metallurgical Works, Hoisting Machinery, Hauling Machinery, Pumping Machinery, Drilling Machinery, Concentrating Plants, Isolated Electric Light Plants, Transmission Power Plants, Rolling Mills, Saw Mills, Railroads, Steamships, etc., etc.

WHAT A FEW OF OUR FRIENDS SAY ABOUT MAGNOLIA METAL:

MR. HARRY WILSON, Superintending Engineer of the Broken Hill Proprietary Co., Ltd., Broken Hill, N.S.W., says:—"Having had years of experience with Magnolia Metal in America, before coming to this country, it was like meeting an old friend. While in America I used the Magnolia Metal in Main Journal Brasses of shafting 16" and 18" in diameter, and with better results than any other known anti-friction metal. At this mine I am using Magnolia Metal entirely, where I have occasion to renew. To my liking, it is the best in the market, and I cannot speak too highly of it."

MR. J. S. HICKEY, of The Anaconda Copper Mining Co. (Foundry Dept.), Anaconda, Mont., says:—"I do not think it is necessary for me to say much to you in regard to the superiority of your Magnolia Metal, as the orders you have been receiving from time to time from our Company, should be sufficient evidence of its worth. We are using it in all of our heavy engine work, and other places where it is necessary to have a first-class bearing. As yet, we have never had a complaint from parties whom we have furnished machinery fitted with your metal."

MR. A. RAHT, General Supt. of The Philadelphia Smelting and Refining Co., Pueblo, Colo., says:—"We use your metal only in the bearings of the Blake & Dodge stonebreakers, where it gives great satisfaction. We have been unable to find any other which will stand the pounding action of these breakers."

MR. S. C. HILL, of The Deadwood & Delaware Smelting Co., Deadwood, So. Dakota, says:—"We have used considerable quantities of your metal at various times and places with satisfactory results."

MR. C. BARTNER, C. E., Butte Reduction Works, Butte, Mont., says:—"I have used Magnolia Metal for the past three years on our five Blake crushers and five 16 x 30 rolls, also on heavy and fast running shafting, and find it superior to any babbitt metal we have ever used. We have also used it on our eighteen 34 x 48 Corliss engine crank journals, running 85 revolutions per minute, and find it O.K."

MR. EDWIN N. HAWKINS, Gen. Mgr., of the Gillett Reduction Co., Gillett Colo., says:—"As to the use of Magnolia Metal, we beg to say that we have used it with satisfaction on crushing rolls of the Cornish type and on an 11" x 15" Dodge crusher."

MR. H. V. PEARCE, Asst. Mgr. of The Boston & Colorado Smelting Co., Argo, Colo., says:—"We have been using your Magnolia Metal at these works for some time, and in certain places, such as in crusher and for large running at slow and medium speed it is most satisfactory."

BEWARE OF FRAUDULENT IMITATIONS.

Genuine Magnolia Metal is made up in bars of which this is a facsimile:

The Name and Trade Mark appear on all boxes and bars, and the words "Patented June 3, 1890" and "Manufactured in U. S." are stamped on the under side of each bar.

MAGNOLIA METAL is for sale at all principal distributing points throughout the world.

MAGNOLIA METAL COMPANY,

OWNERS AND SOLE MANUFACTURERS,

49 Queen Victoria St., LONDON, E. C.
266-267 West St., NEW YORK.
17 St. Ann's Square, MANCHESTER.
59-60-61 Traders Bldg., CHICAGO.

Cable Address: New York, "Magnolia."
Cable Address: London, "Magnolier."

Use A1 or Lieber's Code.

Modern Copper Smelting.

BY

EDWARD DYER PETERS, Jr.

Eighth Edition. Rewritten and Greatly Enlarged.
The standard authority of the world on Copper Smelting.

It contains a record of practical experience, with directions how to build furnaces and how to overcome the various metallurgical difficulties met with in copper smelting.

TABLE OF CONTENTS.

Chapter I Copper and its Ores.
" II Distribution of the Ores of Copper.
" III The Sampling and Assaying of Copper.
" IV The Chemistry of the Calcining Process.
" V The Preparation of Ores for Roasting.
" VI The Roasting of Ores in Lump Form.
" VII The Roasting of Ores in Pulverized Condition.
" VIII Automatic Reverberatory Calciners.
" IX The Smelting of Copper.
" X The Chemistry of the Blast Furnace.
" XI Blast Furnace Smelting (With Carbonaceous Fuel.)
" XII Blast Furnaces Constructed of Brick.
" XIII General Remarks on Blast Furnace Smelting.
" XIV Pyritic Smelting.
" XV Pyritic Smelting—Its History; Principles; Scope; Apparatus; and Practical Results.
" XVI Reverberatory Furnaces.
" XVII The Bessemerizing of Copper Mattes.
" XVIII The Electrolytic Refining of Copper.
" XIX Selection of Process and arrangement of plant.
General Index, etc.

PROFUSELY ILLUSTRATED. PRICE, $5.00.

THE SCIENTIFIC PUBLISHING COMPANY,

NEW YORK:
253 Broadway.

LONDON:
20 Bucklersbury.

THE AMERICAN METAL CO., LIMITED,

80 WALL STREET, [P. O. Box 957.] NEW YORK.

905-6 SECURITY BUILDING, ST. LOUIS, MO.

Copper, Copper Ores, Mattes and Argentiferous Copper, Lead, Lead Bullion, Tin, Spelter, Antimony, Nickel, Aluminum.

ADVANCES MADE ON CONSIGNMENTS.

AGENTS FOR

Balbach Smelting & Refining Co., Newark, N. J.
Henry R. Merton & Company, London, Eng.
Metallgesellschaft, Frankfort on Main, Germany.
Metallurgische Gesellschaft, Frankfort on Main, Germany.
Williams, Foster & Company, } Limited, Swansea, Eng.
Pascoe Grenfell & Sons, }
Société Anonyme de Nickel, Paris.

ATLANTIC MINING CO.

OF MICHIGAN.

Producers of Lake Copper.

JOSEPH E. GAY, President.

JOHN STANTON, Secretary and Treasurer.

MINE OFFICE:

Atlantic Mine P. O., Houghton Co., Mich.

* * *

WOLVERINE COPPER MINING CO.

OF MICHIGAN.

Producers of Lake Copper.

JOHN STANTON, President.

J. R. STANTON, Secretary and Treasurer.

MINE OFFICE:

Allouez P. O., KEWEENAW CO., MICH.

* * *

JOHN STANTON,

11-13 WILLIAM STREET, - - - - - - - NEW YORK.

SOLE AGENT FOR BOTH COMPANIES.

NOTES ON
LEAD AND COPPER SMELTING
AND
COPPER CONVERTING

BY

H. W. HIXON.

"Notes on Lead and Copper Smelting, and Copper Converting" is the contribution of a practical smelter from his experience at three of the largest works of North America, namely: The Arkansas Valley Works at Leadville, Colo.; the Guggenheim Works at Agüas Calientes, in Mexico, and the Anaconda Works of Montana. The author's experience at these works covered lead smelting, copper matte smelting, and the converting of copper matte. He has embodied this experience in his book.

It is a decidedly different type of book from the ordinary metallurgical treatise. It leaves aside all the purely scientific discussions of the latter, and goes fully into details of practical work which they are apt to touch upon but lightly. It is a book which will be especially valuable to those who are actually engaged in operating smelting works.

A glance at the table of contents of Mr. Hixon's book shows the field it covers; copper matte smelting; the calculation of furnace charges; the design of spouts, settlers, and jackets; blowing-in and barring-down a furnace; handling blast furnace slags; the design of lead blast furnaces; lead slags and losses in lead smelting; copper converting at Anaconda. The last subject is treated very fully, the various chapters coming under this head covering fully the design and construction of converter plants, the actual operation of converting, the relining of converters, etc. As an appendix there are given the specifications of the present Anaconda plant, and the drawings from which it was constructed. These plates, of which there are eighteen, are exceedingly well engraved and show dimensions on the drawings themselves. With their aid any engineer can easily prepare working drawings for the construction of a copper converting plant. Besides these the book is well illustrated in the text.

TABLE OF CONTENTS.

Chapter I.—Copper Matte Smelting.
II.—The Calculation of Furnace Charges.
III.—Extraction of Gold and Silver from Matte.
IV.—Types of Furnace.
V.—Spouts, Settlers and Jackets.
VI.—Blowing in and Barring Down a Furnace.
VII.—Handling Blast Furnace Slag.
VIII.—Design of Lead Blast Furnaces.
IX.—Lead Slags and Losses in Lead Smelting.
Chapter X.—Improvements in Roasting Furnaces.
XI.—Smelting Raw Concentrates with Hot Blast at Anaconda.
XII.—Copper Converting at Anaconda.
XIII.—Blowing a Converter Charge.
XIV.—Design of Converter Plants.
XV.—Lining a Converter.
XVI.—Casting Anodes Direct from Converter.
XVII.—Cost of Producing Copper at Anaconda.

APPENDIX.

Specifications of Buildings and Machinery for Copper Converting Plant, Anaconda Mining Company Anaconda, Montana, and accompanying working drawings, etc.

Cloth, Profusely Illustrated, - - - Price, $3.00.

THE SCIENTIFIC PUBLISHING COMPANY,

253 Broadway,
NEW YORK.

20 Bucklersbury,
LONDON, ENG.

THE

Omaha and Grant

Smelting Company,

Omaha, Nebraska. Denver, Colorado.
Durango, Colorado.

BUYERS OF ALL CLASSES OF

GOLD, SILVER, LEAD and COPPER ORES,

Mattes, Bullion and Furnace Products.

Manufacturers and Exporters of

Copper Sulphate.

GUY C. BARTON,
President.

J. B. GRANT,
Vice-President.

E. W. NASH, Secretary and Treasurer.

Capital and Surplus, $3,500,000.

EUSTIS MINING CO.,

EUSTIS, PROVINCE OF QUEBEC,

MINERS OF

COPPER PYRITES ORE,

Are prepared to contract with Sulphuric Acid Manufacturers for their Supply of Sulphur.

Address W. E. C. EUSTIS, 55 KILBY STREET, BOSTON, MASS.

ELLIOTT'S METAL CO., LTD.,

Solly Oak Works, near Birmingham, and
Pombroy Copper Works, Burry Port, South Wales.

MANUFACTURERS OF ALL KINDS OF

Copper Sheets, Tubes and Yellow Metal.

SMELTERS. REFINERS.

DESILVERIZERS AND BUYERS OF

Copper, Silver, Gold and Lead Ores, etc.

London Address: 22 Leadenhall Buildings, E. C.

ARIZONA COPPER CO.,

Producers of "A. C. C." Brand, and Copper Precipitate Mines and Smelters at Clifton, Arizona.

General Superintendent, JAMES COLQUHOUN, Arizona.

AGENTS:

Lewisohn Brothers, - - - New York.

The Metallurgy of Steel,

—BY—

HENRY M. HOWE, A. M., S. B.

This Work is the Most notable Contribution to the Literature of Iron and Steel ever published. Every Metallurgist, Every Manufacturer of Iron and Steel should have this Standard Work.

TABLE OF CONTENTS.

Chapter I.—Classification and Constitution of Steel.
Chapter II.—Carbon and Iron Hardening, Tempering and Annealing
Chapter III.—Iron and Silicon.
Chapter IV.—Iron and Manganese.
Chapter V.—Iron and Sulphur.
Chapter VI.—Iron and Phosphorus.
Chapter VII.—Chromium, Tungsten, Copper.
Chapter VIII.—The metals occuring but sparingly in Iron.
Chapter IX.—Iron and Oxygen.
Chapter X.—Nitrogen, Hydrogen, Carbonic Oxide.
Chapter XI.—The absorption and escape of Gas from Iron.
Chapter XII.—The Prevention of Blowholes and Pipes.
Chapter XIII.—Structure and related subjects.
Chapter XIV.—Cold Working, Hot Working, Welding.
Chapter XV.—Direct Processes.
Chapter XVI.—Charcoal-Hearth Process.
Chapter XVII. The Crucible Steel Process.
Chapter XVIII.—Apparatus for the Bessemer Process.
Appendix I.—Special Steels.
Appendix II.—Anti-Rust Coatings.
Appendix III.—Lead Quenching.
Appendix IV.—Direct Processes.

Royal Quarto, Cloth. Profusely Illustrated with Working Drawings.

PRICE, $10.00.

THE SCIENTIFIC PUBLISHING COMPANY,

253 Broadway,
NEW YORK.

20 Bucklersbury,
LONDON, ENG.

MONTANA
ORE PURCHASING CO.

F. AUG. HEINZE, Pres. and Gen. Mgr.
ARTHUR P. HEINZE, Sec'y.

JOHN MacGINNIS, Vice-Pres.
STANLEY GIFFORD, Treas.

Capital, $1,000,000.

PURCHASERS, SMELTERS AND REFINERS OF

Copper, Silver and Gold Ores.

SMELTING WORKS:

BUTTE, MONTANA.

OFFICES:

BUTTE, MONT., and 100 BROADWAY, NEW YORK.

Balbach Smelting and Refining Co.,

EDWARD BALBACH, Jr., Pres. **J. LANGELOTH, Vice-Pres.**

NEWARK, NEW JERSEY.

Smelters and Refiners of

GOLD, SILVER, LEAD AND COPPER ORES.

Bullion and Argentiferous Copper Matte

received on consignment or purchase.

SMELTING & REFINING WORKS,
ELECTROLYTIC COPPER WORKS, } NEWARK, N. J.

THE

Boston and Colorado Smelting Co.,

ARGO, ARAPAHOE COUNTY, COLORADO.

IN OPERATION SINCE 1867.

Treat all classes of Gold and Silver Ores and Concentrates, except those carrying Lead; but make a Specialty of Copper Ores and Mattes carrying Gold and Silver.

The Highest Prices Paid that can be obtained in any Market.

N. P. HILL, General Manager.
RICHARD PEARCE, Manager. HENRY HANINGTON, Cashier.

MANUAL
OF
QUALITATIVE BLOWPIPE ANALYSIS
AND
DETERMINATIVE MINERALOGY.

BY

F. M. ENDLICH, S. N. D.,

MINING ENGINEER AND METALLURGIST,

LATE MINERALOGIST SMITHSONIAN INSTITUTION, AND UNITED STATES GEOLOGICAL AND GEOGRAPHICAL SURVEY OF THE TERRITORIES.

Bound in Cloth. Illustrated. Price $4.00.

This work has been specially prepared for the use of all students in this great department of chemical science. The difficulties which beset beginners are borne in mind, and detailed information has been given concerning the various manipulations. All enumerations of species as far as possible have been carried out in alphabetical order, and in the determinative tables more attention has been paid to the physical characteristics of substances under examination than has ever yet been done in a work of this kind. To a compilation of all the blowpipe reactions heretofore recognized as correct the author has added a number of new ones not previously published. The entirearrangement of the volume is an original one, and to the knowledge born of an extensive practical experience the author has added everything of value that could be gleaned from other sources. The book cannot fail to find a place in the library or workshop of almost every student and scientist in America.

TABLE OF CONTENTS.

Chapter I.—Appliances and Reagents required for Qualitative Blowpipe Analysis.
Chapter II.—Methods of Qualitative Blowpipe Analysis.
Chapter III.—Tables giving Reactions for the Oxides of Earth and Minerals.
Chapter IV.—Prominent Blowpipe Reactions for the Elements and their Principal Mineral Compounds.
Chapter V.—Systematic Qualitative Determination of Compounds.
Chapter VI.—Determinative Tables and their Application.

THE SCIENTIFIC PUBLISHING COMPANY,

NEW YORK: LONDON:
253 Broadway. 20 Bucklersbury.

Sulphur Apparatus - - -

distillation

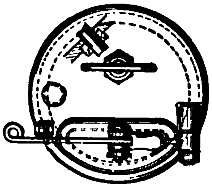

Calcaroni,
Steam,
Calcium Chloride and
Sulphurous—
Hydrogen Sulphide.

Plans, specifications and estimates **for** complete **manufacturing plants.**

Send 100 lbs. of ore, for analysis and working test. I will make a report recommending most suitable method of treatment with approximate cost of production. The only equipment known of for such tests in the United States.

Edward Francis White, M.E.,
133 Liberty Street, New York City.

FOR PRICES OF

The Mineral Industry

(ANNUAL)

See Inside Front Cover.

Engineering and Mining Journal

(WEEKLY)

See Inside Back Cover.

HOSKINS' PATENT HYDROCARBON

Assay Furnaces.

Awarded the Highest and only MEDAL at World's Fair for Hydrocarbon Blowpipes and Assay Furnaces.

No Dust. No Ashes. Cheap, Effective, Economical, Portable and Automatic.

Send for Circular and Price List to

W. HOSKINS,
81 South Clark St., Room 51, CHICAGO, ILL.

RICKETTS & BANKS,

104 JOHN STREET, NEW YORK.

Assayers and Metallurgists.

Public Weighers and Samplers.

Complete Equipment for making PRACTICAL WORKING TESTS of ORES to determine best method of treatment. TRIAL RUNS by all MILLING; CONCENTRATING and SMELTING processes. Facilities for treating small or carload lots.

CHEMICAL and METALLURGICAL processes investigated and reported upon.

ASSAYS and ANALYSES of all classes of Materials.

SCALE OF CHARGES ON APPLICATION.

CYANIDE.

Purified 98 - 99% *Guaranteed.*

CHLORIDE OF LIME, SULPHIDE OF IRON,

PERMANGANATE OF POTASH,

ZINC CHLORIDE, ZINC DUST,

HYPOSULPHITE OF SODA,

PEROXIDE OF SODIUM,

And other Chemicals for Mining Purposes.

The Roessler & Hasslacher Chemical Co.

100 William Street,

New York.

P. O. BOX 1999.

TRADE MARK. TRADE MARK.

WORKS: PERTH AMBOY, N. J. NIAGARA FALLS, N. Y.

The Ore Deposits

OF THE

United States.

BY

J. F. KEMP, A.B., E.M.,

PROFESSOR OF GEOLOGY IN THE SCHOOL OF MINES, COLUMBIA UNIVERSITY.

CONTENTS.

PART I.—Introduction.

CHAPTER I.—General Geological Facts and Principles.

CHAPTER II.—On the Formation of Cavities in Rocks.

CHAPTER III.—The Minerals Important as Ores: The Gangue Minerals and the Sources whence both are derived.

CHAPTER IV.—On the Filling of Mineral Veins.

CHAPTER V.—On Certain Structural Features of Mineral Veins.

CHAPTER VI.—The Classification of Ore Deposits; a Review and a Scheme Based on Origin.

PART II.—The Ore Deposits.

CHAPTER I.—The Iron Series (in part). Introductory Remarks on Iron Ores. Limonite. Siderite.

CHAPTER II.—The Iron Series (continued). Hematite, Red and Specular.

CHAPTER III.—Magnetite and Pyrite.

CHAPTER IV.—Copper.

CHAPTER V.—Lead Alone.

CHAPTER VI.—Lead and Zinc.

CHAPTER VII.—Zinc Alone, or with metals other than lead.

CHAPTER VIII.—Lead and Silver.

CHAPTER IX.—Silver and Gold. Introductory: Eastern Silver Mines and the Rocky Mountain Region of New Mexico and Colorado.

CHAPTER X.—Silver and Gold (continued). Rocky Mountain Region, Wyoming, the Black Hills, Montana and Idaho.

CHAPTER XI.—Silver and Gold (continued). The Region of the Great Basin, in Utah, Arizona and Nevada.

CHAPTER XII.—The Pacific Slope. Washington, Oregon and California.

CHAPTER XIII.—Gold elsewhere in the United States and Canada.

CHAPTER XIV.—The Lesser Metals. Aluminum, Antimony, Arsenic, Bismuth, Chromium, Manganese.

CHAPTER XV.—The Lesser Metals (continued). Mercury, Nickel, Cobalt, Platinum, Tin.

CHAPTER XVI.—Concluding Remarks. Summation of Such General Geological Relations Among North American Ore Deposits as can be Detected.

ILLUSTRATED, PRICE, $4.00.

THE SCIENTIFIC PUBLISHING COMPANY,

NEW YORK:
253 Broadway.

LONDON:
20 Bucklersbury.

F. W. Devoe & C. T. Raynolds Co.

ESTABLISHED 1755.

The Oldest and Largest Paint Manufacturing Concern in the United States.

101-103 FULTON ST., NEW YORK. 176 RANDOLPH ST., CHICAGO.

———MANUFACTURERS OF———

PAINTS, VARNISHES, BRUSHES,

FOR ALL PURPOSES.

Artists' Materials—Mathematical Instruments.

Catalogues, Price Lists, Samples of our Various Departments on Application.

MASSACHUSETTS

INSTITUTE OF TECHNOLOGY,

BOSTON, MASS.

JAMES M. CRAFTS, PRESIDENT.

DEPARTMENT OF

MINING ENGINEERING AND METALLURGY.

THOROUGH instruction is given in the fundamental subjects of Mathematics, Physics, and Chemistry. These are accompanied or followed by lectures and laboratory instruction in Mineralogy, Geology, Surveying and Assaying, in Mining Engineering and Metallurgy. The course is made as practical as possible by means of extensive laboratories for smelting and milling, by field work and by summer schools of Mining and Metallurgy. Two distinct options are offered, one in Mining Engineering and one in Metallurgy. Important advantages are offered by the Chemical and by the Mechanical and Civil Engineering Departments of the Institute.

The Institute offers also courses in Civil, Mechanical, Electrical, Chemical and Sanitary Engineering, in Architecture, Physics, Naval Architecture, Biology, Chemistry, and in Geology, and a course in General Studies. Each leads in four years to the degree of Bachelor of Science.

Catalogues and detailed information will be furnished on application to the Secretary.

HARRY W. TYLER, Secretary.

WRITE——

Jos. Dixon Crucible Co.,

JERSEY CITY, N. J., U. S. A.,

For information about graphite, plumbago, black lead. Retorts for silver smelter crucibles for brass and steel melters. Graphite specialties. Lubricating graphite and graphite grease for wire ropes. We are miners, manufacturers and importers and solicit correspondence on all matters pertaining to graphite and its uses.

THE

MANUFACTURE AND PROPERTIES

OF

STRUCTURAL STEEL.

—BY—

HARRY HUSE CAMPBELL, S.B.

No one interested in the science of steel making can fail to appreciate this work, whose author, through long experience as superintendent of one of the largest steel works in the United States has gathered a broad fund of knowledge of the greatest practical importance to steel makers and steel users everywhere. Particular attention is called to the record of experiments. Owing to the exceptional facilities at his command, the author has been able to present the results of some of the most thorough experiments in the properties of steel that have ever been carried on.

TABLE OF CONTENTS.

Chapter I.—The Errancy of Scientific Records.
Chapter II.—Pig-Iron.
Chapter III.—Wrought-Iron.
Chapter IV.—Steel.
Chapter V.—High-Carbon Steel.
Chapter VI.—The Acid Bessemer Process.
Chapter VII.—The Basic Bessemer Process.
Chapter VIII.—The Open Hearth Furnace.
Chapter IX.—Fuel.
Chapter X.—The Acid Open Hearth Process.
Chapter XI.—The Basic Open Hearth Process
Chapter XII.—Considerations on Certain Costs of Manufacture.
Chapter XIII.—Segregation and Homogeneity.
Chapter XIV.—Influence of Hot Working on Steel.
Chapter XV.—Annealing.
Chapter XVI.—The History and Shape of the Test Piece.
Chapter XVII.—The Influence of Certain Elements on the Physical Properties of Steel.
Chapter XVIII.—Classification of Structural Work.
Chapter XIX.—Welding.
Chapter XX.—Steel Castings.
Chapter XXI.—Inspection.

CLOTH. ILLUSTRATED. PRICE, $4.00.

THE SCIENTIFIC PUBLISHING COMPANY,

253 Broadway,
NEW YORK.

20 Bucklersbury,
LONDON, ENG.

POCAHONTAS COAL

An unequalled fuel for the generation of steam.

It enjoys the distinction of being the only Coal that has been officially endorsed by the Governments of the United States and Great Britain.

It is used exclusively by the Cunard and White Star Steamship Companies, and by its use they have made all the great records of recent years.

Exhaustive tests made by leading manufacturers of the country have shown it to be the most economical fuel for their use, as it will generate steam faster and in larger quantities than any other American coal.

The output of the mines during the year 1897 amounted to 4,000,000 tons.

CASTNER, CURRAN & BULLITT,

Sole Agents for the

Pocahontas Semi-Bituminous Smokeless Coal,

Main Office: 328 Chestnut St., Philadelphia, Pa.

BRANCH OFFICES:

1 Broadway, New York.
70 Kilby Street, Boston, Mass.
Progress Building, Norfolk, Va.
Terry Building, Roanoke, Va.
Old Colony Building, Chicago, Ill.
Neave Building, Cincinnati, Ohio.
4 Fenchurch Avenue, London, England.

THE COLUMBIAN

PARLIAMENTARY COMPEND

OR

RULES OF DEBATE

FOR

Ready Reference in Societies, Public Assemblages, and All Deliberative Bodies, including the Constitution of the United States, the Declaration of Independence, the Platforms of the Various Political Organizations, the Naturalization Laws, the Method of Electing a Chief Executive, and the Presidential Popular and Electoral Vote from 1860 to 1896.

ARRANGED BY

HARRY W. HOOT.

This little manual is especially adapted for use by "the Chair" from such standard authorities as Roberts, Cushing, Matthias, Jefferson, and Crocker.

Where the authorities differ, the view most conformable to the latest and most thoroughly established usages of Parliamentary Law has been accepted.

The table of motions has been arranged by placing on the margin the names of such motions as are used in Common Parliamentary Practice, with their classification and order of procedure in a deliberative body, being placed at the top of the book, and descending in regular consecutive order will be found those having the next highest order of precedence, viz.: Privileged questions, Incidental questions, Subsidiary motions, and Main questions. Thus can be seen, without turning a page and in a moment's time, whether a motion is in order.

Between each marginal reference will be found in a condensed form all the rules relating to that particular question.

The book is so arranged that it can be carried in the pocket. Bound in cloth. It will be found to be of invaluable aid to those who are required to decide questions of Parliamentary Law without reference to larger text-books.

PRICE, 50 CENTS.

THE SCIENTIFIC PUBLISHING COMPANY,

NEW YORK: 253 Broadway.

LONDON: 20 Bucklersbury.

BERWIND-WHITE
COAL MINING COMPANY,

Miners and Shippers of the

Eureka Bituminous Coal,

1 BROADWAY, NEW YORK.
BETZ BUILDING, BROAD ST. and SOUTH PENN SQ., PHILADELPHIA.
19 CONGRESS ST., BOSTON, MASS.

An Unexcelled Fuel for Steamships and Locomotives, Manufactories, Rolling Mills, Forges, Glass Works, Brick and Lime Burning, Coke and for the Manufacture of Steel, Iron, etc.

SHIPPING WHARVES:

PHILADELPHIA, Greenwhich Point,
NEW YORK, Eureka Pier, Harsimus (foot 6th St.) JERSEY CITY, N. J.
BALTIMORE, Canton Piers.

Lidgerwood Hoisting Engines

FOR

MINES.

1, 2 or 4 DRUMS,

WITH REVERSIBLE LINK MOTION OR PATENT IMPROVED FRICTION.

OVER 13,000 ENGINES IN USE.

SEND FOR CATALOGUE.

Built to gauge on the Duplicate Part System.
Quick Delivery Assured.
STANDARD FOR QUALITY AND DUTY.

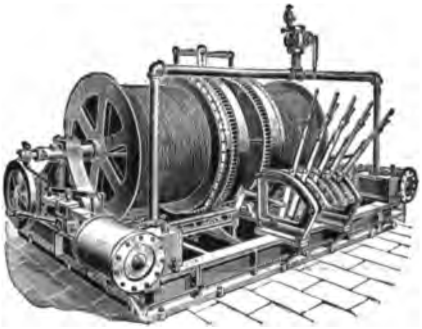

DOUBLE DRUM FRICTION MINE HOIST.

LIDGERWOOD MANUFACT'G CO.,

96 LIBERTY STREET, NEW YORK.

Bradley & Poates

New Process & Relief Line

Engraving

10 & 12 Vandewater St.,
New York.

Copy Books, Maps, Diagrams, and Color Plates.

SPECIAL ATTENTION GIVEN TO

MAPS, MINING CHARTS

AND

MECHANICAL DIAGRAMS.

THE

CANADIAN ICE AGE.

BEING

NOTES ON THE PLEISTOCENE GEOLOGY OF CANADA, WITH ESPECIAL REFERENCE TO THE LIFE OF THE PERIOD AND ITS CLIMATAL CONDITIONS.

BY

Sir J. WILLIAM DAWSON, C.M.G.,
LL.D., F.R.S., F.G.S., Etc.

This book contains information bearing on the history of the northern half of the continent of North America in that Ice Age which was in some sense peculiarly its own.

The author has long been convinced that we must take into account the agency both of land ice and sea-borne ice in many forms, along with repeated and complex elevations and depressions of large portions of the continent, in order to account for the effects observed. He is disposed, however, to seek for the causes of changes of climate rather in geological and geographical agencies than in astronomical vicissitudes, some of which are too slow and uncertain in their operation, and others altogether conjectural. Such views are less sensational than those which invoke vast and portentous exaggerations of individual phenomena, but they are likely, in the end, to commend themselves to serious thinkers, especially when they are confirmed by the facts observed in the regions which are, of all others, best suited for the study both of extinct and recent ice-action.

TABLE OF CONTENTS.

Chapter I. Historical Details.
Chapter II. The Succession of Deposits.
Chapter III. Physical and Climatal Conditions.
Chapter IV. Physical and Climatal Conditions, Continued.
Chapter V. Some Local Details.
Chapter VI. Pleistocene Fossils.
Chapter VII. General Conclusions.

A Book that every Student of Geology should read.
CLOTH. PRICE, $2.00.

THE SCIENTIFIC PUBLISHING COMPANY,

NEW YORK:
253 Broadway.

LONDON:
20 Bucklersbury.

JEFFREY COAL CUTTERS.

JEFFREY ELECTRIC CHAIN COAL CUTTER.

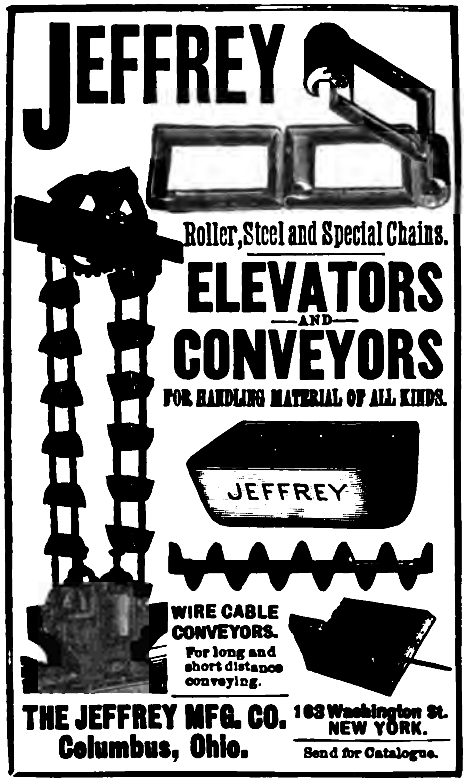

JEFFREY

Roller, Steel and Special Chains.

ELEVATORS

—AND—

CONVEYORS

FOR HANDLING MATERIAL OF ALL KINDS.

WIRE CABLE CONVEYORS.

For long and short distance conveying.

THE JEFFREY MFG. CO.
Columbus, Ohio.

163 Washington St.
NEW YORK.

Send for Catalogue.

MADE FOR EITHER AIR OR ELECTRIC POWER.

◆

Mine Equipments.

Coal Washing Machinery.

Coal Screens.

Electric Drills.

Coal and Ashes Handling Machinery.

◆

For CATALOGUE and PRICES
address

THE JEFFREY M'F'G CO.,

COLUMBUS, OHIO.

Electric Mine Locomotives.

BACON'S

Underground Hoisting Engine.

BACON'S

Double Cylinder Hoisting Engine.

HOISTING,
CRUSHING
and
MINING
MACHINERY.

WORKS:
Pacific Iron Works,
Farrel Foundry
and
Machine Co.,
and
Sherbrooke, P. Q.

BACON'S

Double Cylinder, Double Drum Hoisting Engine.

EARLE C. BACON,

ENGINEER,

Havemeyer Building, New York.

Farrel's Ore and Rock CRUSHERS.

Bacon's High Speed Fine Crushing ROLLS.

SYSTEMATIC MINERALOGY

BASED ON A

NATURAL CLASSIFICATION.

WITH A GENERAL INTRODUCTION.

—BY—

THOMAS STERRY HUNT, M.A., LL.D.,

Author of "Chemical and Geological Essays," "Mineral Physiology and Physiography," "A New Basis for Chemistry," etc.

CONTENTS.

Chapter I. The Relations of Mineralogy;
II. Mineralogical Systems;
III. First Principles in Chemistry;
IV. Chemical Elements and Notation;
V. Specific Gravity;
VI. The Coefficient of Mineral Condensation;
VII. The Theory of Solution;
VIII. Relations of Condensation to Hardness and Insolubility;
IX. Crystallization and its Relations;
Chapter X. The Constitution of Mineral Species;
XI. A New Mineralogical Classification;
XII. Mineralogical Nomenclature;
XIII. Synopsis of Mineral Species;
XIV. The Metallaceous Class;
XV. The Halidaceous Class;
XVI. The Oxydaceous Class;
XVII. The Pyricaustaceous Class;
XVIII. Mineral History of Waters;
General Index;
Index of Names of Minerals.

PRICE $5.00.

The aim of the author in the present treatise has been to reconcile the rival and hitherto opposed Chemical and Natural History methods in Mineralogy, and to constitute a new system of classification, which is "at the same time Chemical and Natural Historical," or, in the words of the preface, "to observe a strict conformity to chemical principles, and at the same time to retain all that is valuable in the Natural History method; the two opposing schools being reconciled by showing that when rightly understood, chemical and physical characters are really dependent on each other, and present two aspects of the same problem which can never be solved but by the consideration of both." He has, moreover, devised and adopted a Latin nomenclature and arranged the mineral kingdom in classes, orders, genera and species, the designations of the latter being binomial.

THE SCIENTIFIC PUBLISHING COMPANY.

NEW YORK:
253 Broadway.

LONDON:
20 Bucklersbury.

Mining Machinery.

Bullock's Diamond Prospecting Core Drills.

DELVER Diamond Drill.
2 in. Hole....... 2500 ft.
2⅝ in. Hole...... 2000 ft.

FIFTEEN STYLES AND SIZES.

OPERATED BY
STEAM,
COMPRESSED AIR,
ELECTRICITY,
HAND OR HORSE POWER.

The only absolutely accurate method of prospecting for

GOLD, SILVER, TIN, IRON, COAL, SALT, COPPER, ZINC AND MANGANESE,
AND
TESTING QUARRY PROPERTIES.

OUTFITS FURNISHED FOR ANY REQUIRED DEPTHS.

BULLOCK-CORLISS ENGINES, unexcelled for durability and economy.

WILLANS' PATENT CENTRAL VALVE ENGINES for DIRECT coupling to DYNAMOS, manufactured in sizes from 75 to 1200 H. P. Simple, compound or triple. Over 200,000 H. P. in use or on order.

MONARCH ROCK DRILLS, adapted for use in mines, quarries, and rock work generally, operated by steam or air, furnished with all styles of mountings. Send us YOUR SPECIFICATIONS.

HOISTING MACHINERY FOR ANY REQUIREMENTS.

Murphy's Champion Mine Ventilators.

HIGHEST EFFICIENCY.

Furnished in sizes from 4 ft. to 14 ft. diameter.

MURPHY CHAMPION VENTILATOR.

M. C. BULLOCK MAN'F'G CO.,

Send for Special Catalogues. CHICAGO, U. S. A.

RAND

Improved Compressed Air Machinery.

DUPLEX MEYER, DUPLEX CORLISS,
STRAIGHT LINE, BELT POWER, COMPOUND,
HIGH PRESSURE
AND SPECIAL COMPRESSORS FOR ALL
PURPOSES AND CONDITIONS.

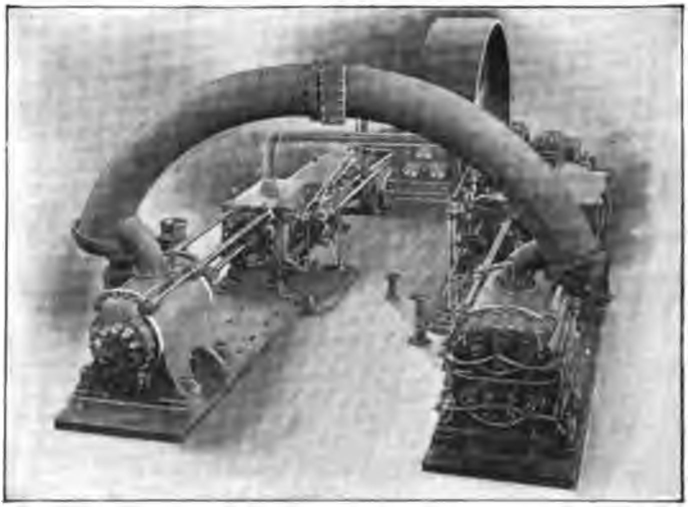

The accompanying illustration shows latest design of Rand Duplex Air Compressor, having compound air cylinders with mechanical valves and arch inter-cooler and compound condensing Corliss Steam Engines.

◆

RAND IMPROVED ROCK DRILLS: ALL SIZES.

HALSEY PNEUMATIC PUMPS,

THE AIR LIFT. AIR HOISTS.

Send for Catalogue.

RAND DRILL CO.

100 BROADWAY, NEW YORK.

Something New.

Descriptive Pamphlet on Application.

No Cooling Floor Required.

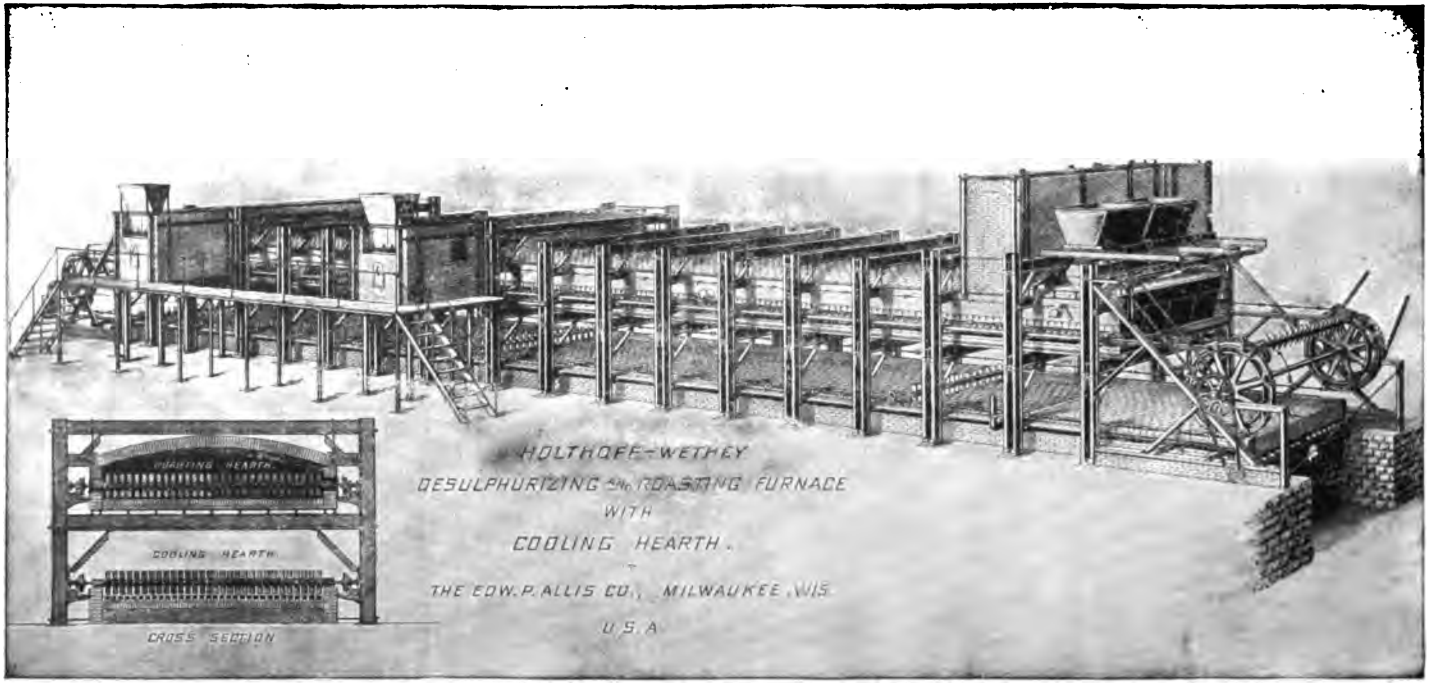

THE EDWARD P. ALLIS COMPANY, **Milwaukee, Wis., U. S. A.**

BUILDERS OF

THE HOLTHOFF-WETHEY DESULPHURIZING AND ROASTING FURNACE.
THE WETHEY MULTIPLE DECK CALCINING FURNACE.

RELIANCE WORKS. **ESTABLISHED 1860.**

The Edward P. Allis Company,

MILWAUKEE, WIS., U. S. A.

MANUFACTURERS OF

Mining, Milling and Smelting Machinery.

Stamp Batteries,
Concentrators,
Vanners,
Jigs,
Slime Tables,

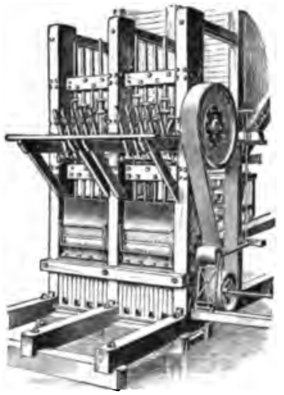

Crushing Rolls,
Chilian Mills,
Ore Crushers,
Ore Feeders,
Copper Plates.

LEYNER ROCK DRILLS,
REYNOLDS' CORLISS ENGINES,
Hoisting Engines, Pumping Engines, Air Compressors,
STEAM STAMPS.

Stamp Mills,
Cyanide Mills,
Chlorination Mills,

Chlorinating Barrels,
Amalgamating Barrels
Prospecting Outfits.

ESTIMATES FURNISHED FOR COMPLETE PLANTS

WRITE FOR CATALOGUES

BRANCH OFFICES:

1111 Havemeyer Bldg., New York.
509 Home Ins. Bldg., Chicago.
702 Ger. Nat. Bank Bldg., Pittsburg, Pa.
416 Corn Exchange, Minneapolis, Minn.
1711 Tremont St., Denver, Colo.
39 Victoria St., Westminster, London, S. W., England.
37 Lewisohn Bldg., Butte, Mont.
9 Fremont St., San Francisco, Cal.
8 Calle Gante, City of Mexico, Mex.
C.A.Williams & Co., Johannesburg, S.A.R.
Flint, Eddy & Co., Sydney, N. S. W.
80 Rue Taitbout, Paris, France.

SULPHURETS

(Auriferous Iron Pyrites) have always caused metallurgists

TROUBLE.

MECKLENBURG IRON WORKS,

JOHN WILKES, Manager,
CHARLOTTE, N. C., U. S. A.

Manufacture machinery, by which absolute economical financial success in the treatment of Sulphurets is

GUARANTEED.

Have erected several plants that have averaged **above 96 per cent.** recovery, throughout several years' working.

When needing machinery, write to us.

Boilers, Engines Hoisters, Pumps, Ore Cars and Car Wheels, Feeders, Stamp Batteries, Concentrators, Roasting and Chlorinating Outfits, All Mine and Mill Supplies, Hydraulic Plants.

EDWARD CHESTER & CO.,

Manufacturers of all classes of

MINING MACHINERY,

SUPPLY and ERECT.

STAMPS,
BOILERS,
ENGINES,
COMPRESSORS,
DRILLS,

PUMPS,
HOISTS,
ELEVATORS,
CRUSHERS,
ROLLS, &c.

Contracts undertaken for complete equipment of Mines with Mill Buildings and Machinery.

Works: RENFREW, Scotland.
Head Office: 120, Bishopsgate St., Within, LONDON, Eng.
Branches: Johannesburg, Bulawayo, Barberton, Port Elizabeth, Kalgoorlie.

The Argall Roasting Furnace.

The following are a few advantages of this furnace:

All steel construction.

Guaranteed less repairs.

Less power to operate.

Less floor space occupied.

Less fuel used per ton treated than any other mechanical furnace.

SHIPPING WEIGHT, - -	63,000 lbs.
PRICE, F. O. B. DENVER, -	$5,000.00.

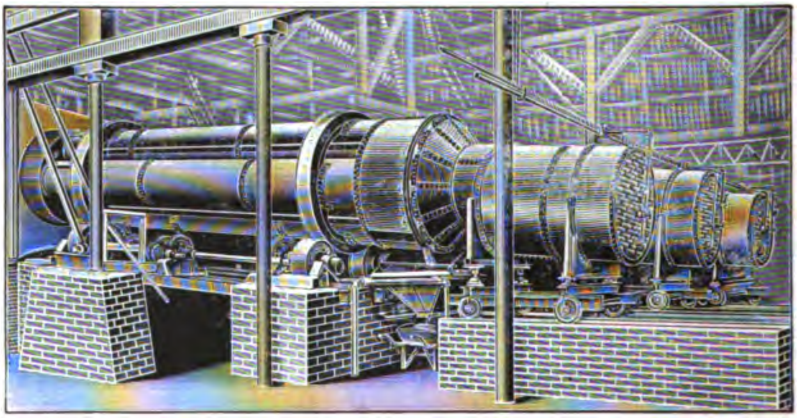

MANUFACTURED BY

The F. M. Davis Iron Works Co.,

DENVER, COLO., U. S. A.

Manufacturers of Mining and Ore Milling Machinery and Appliances.

WRITE FOR CATALOGUE No. 18—MILLING MACHINERY.

THE
Wilfley Concentrator

THE MINE AND SMELTER SUPPLY CO.
SOLE AGENTS.

The Wilfley Concentrator is the most successful concentrator ever put on the market. It has a greater capacity than any other machine and also saves more and cleaner concentrates than its competitors. It requires but little attention when once adjusted, and requires no expert to adjust or to run it successfully. It has no expensive belts to crack or wear out, and has no complicated machinery to keep in repair. It is the only concentrating table on which the various minerals are separated, allowing objectionable minerals, as zinc, to be thrown aside.

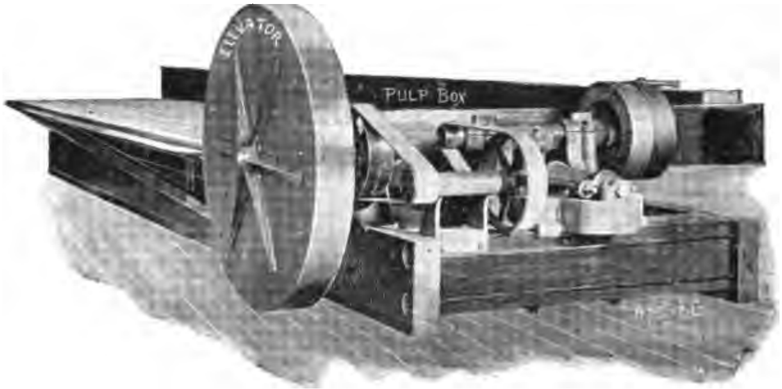

Ores can be tested on the Wilfley Concentrator, by application to HENRY E. WOOD, 1734 Arapahoe St., Denver, Colo., who will test ores in lots of 100 to 150 lbs., furnishing assays of ore, tailings and concentrates, for the sum of Ten Dollars per test. (This does not include chemical determinations.) In sending sample lots of ore, freight should be prepaid.

THE MINE AND SMELTER SUPPLY CO.,
Seventeenth and Blake Sts.,
DENVER, COLO.
The Largest Mine and Mill Supply House in the West.

COMPLETE OUTFITS FOR

STAMP MILLS,
CONCENTRATING MILLS,
CYANIDE MILLS,
CHLORINATION MILLS,
PAN AMALGAMATION MILLS,
SAMPLING MILLS,
HOISTING PLANTS,
PUMPING PLANTS, &c., &c.

The Herreshoff Roasting Furnace

: : : : For : : : :

Desulphurizing Ores.

NO FUEL USED, ✤ Repairs and Labor Cost Nominal,

Simple in Construction, ✤ One Man can attend 100.

REPAIRS CAN BE MADE WHILE RUNNING.

No Shutting Down.

OVER 150 IN USE.

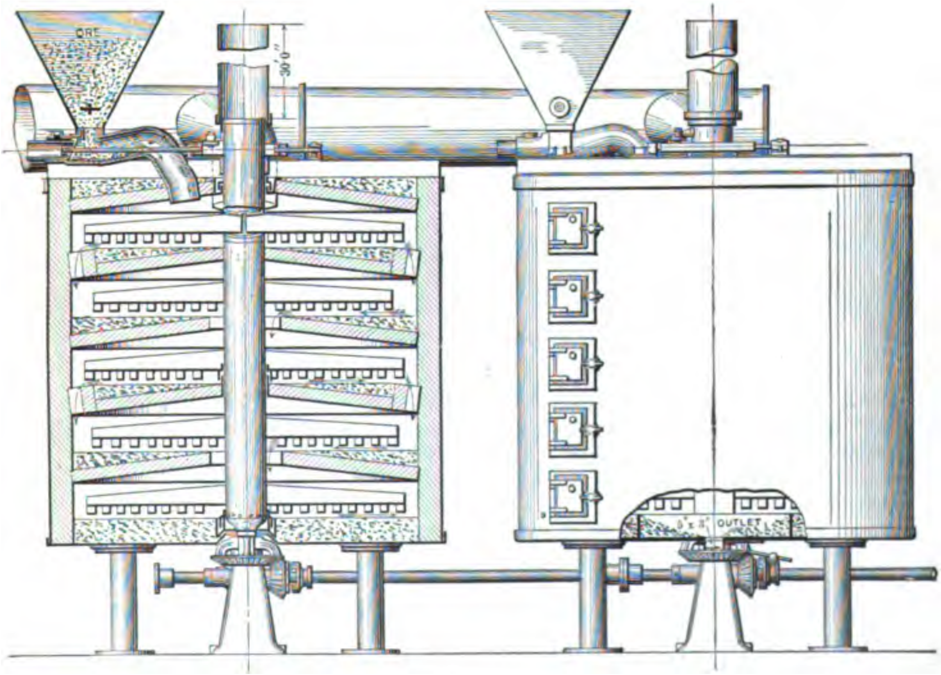

For particulars see article page 237 of this book or apply to manufacturers.

THE NICHOLS CHEMICAL CO.,

32 LIBERTY STREET,

NEW YORK.

SMELTERS AND REFINERS OF COPPER.

Stamp Milling of Gold Ores.

BY

THOMAS A. RICKARD,

Mining Engineer and Metallurgist, Fellow of the Geological Society, Associate of the Royal School of Mines, London; Member of Council American Institute of Mining Engineers, State Geologist of Colorado, etc., etc.

TABLE OF CONTENTS.

This book offers a careful description of the most recent gold-milling practice in this and other countries, being a record of the results of investigations made by the author in the course of professional work during the past ten years. The author's inquiry into the principles of this important branch of metallurgy sprang from the first observation of the apparently contradictory practice of Colorado and California, in both of which States he has had charge of the operation of typical milling plants. The search for the scientific principles explaining methods so diverse led him to the general study of the reduction of gold ores and induced him to spread the inquiry over a field nearly commensurate with existing mining regions. The matter thus collected is rather a painstaking description of practice than a discussion of the chemistry and mechanics of the stamp-milling process, and is therefore quite as valuable to those engaged in the work of the mill as to the student and engineer.

CLOTH. ILLUSTRATED. PRICE $2.50.

THE SCIENTIFIC PUBLISHING COMPANY,

253 Broadway,
NEW YORK.

20 Bucklersbury,
LONDON, ENG.

FRIED. KRUPP GRUSONWERK,

MAGDEBURG-BUCKAU.

MINING MACHINERY.

PATENT BALL MILLS FOR DRY CRUSHING.

MORE THAN 1400 AT WORK.

STAMP BATTERIES OF EVERY DESCRIPTION.

SHOES AND DIES OF SPECIAL KRUPP STEEL.

ORE CRUSHERS.

ROLLER MILLS.

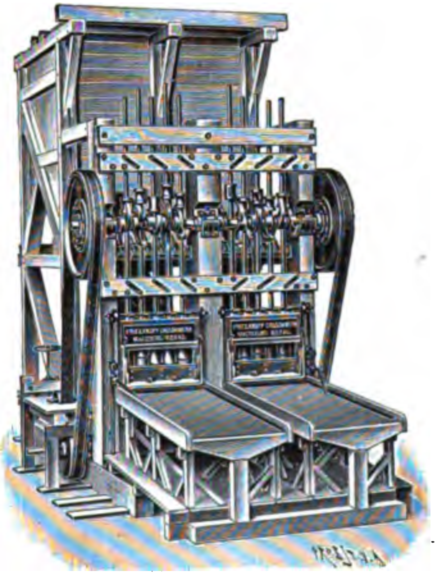

(Cliché Pochiverk A 40 a)

COMPLETE ORE DRESSING PLANT.

A large Testing Station for Crushing and Dressing at the Works.

AGENTS:

For the **United States: THOS. PROSSER & SON,** 15 Gold Street, NEW YORK.
For **Canada: JAS. W. PYKE & CO.,** 35 St. Francois Xavier Street, MONTREAL.
For **Mexico: Oficina Tecnica** de las Fabricas de **Fried. Krupp, Essen y Fried. Krupp Grusonwerk, Magdeburg-Buckau,** Apartado 549, MEXICO.
For **Peru: C. M. SCHROEDER & CO.,** LIMA. For **Chili: VORWERK & CO.,** VALPARAISO.
For **Queensland: HOYER, TIEGS & CO.,** BRISBANE.
For **New South Wales, Victoria, South-Australia, Tasmania and New Caledonia: NOYES BROS.** 12 O'Connel St., SIDNEY (N. S. W.), and 15 Queen St., MELBOURNE.
For **Western Australia: BEWICK, MOREING & CO.,** LONDON and **McBEAN, BOWKER & CO.,** PERTH.
For **New Zealand: BEWICK, MOREING & CO.,** Broad Street House, New Broad St., LONDON.
For **South Africa: United Engineering Co., Ltd.,** P. O. Box 399, JOHANNESBURG, S. A. R.

FRASER & CHALMERS

LIMITED,

43 THREADNEEDLE ST., LONDON, E.C.

Works: ERITH, KENT ENG., and CHICAGO, ILL., U.S.A.

MAKERS OF ALL KINDS OF

Machinery for Mining,

And Subsequent Treatment of Diamonds, Gold, Silver, Copper, Iron, Tin, Lead and Coal.

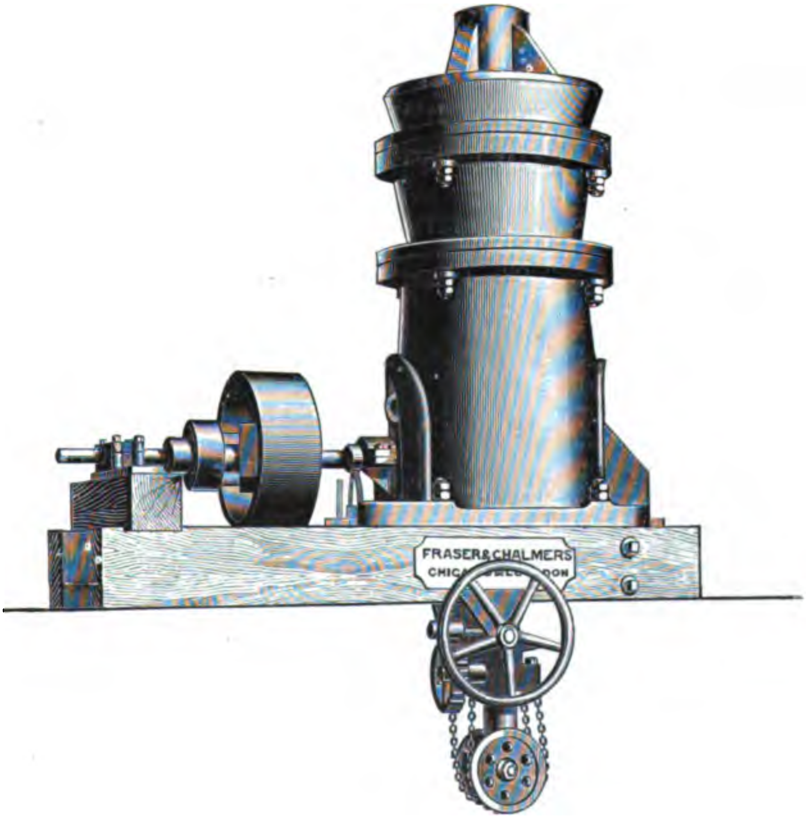

COMET CRUSHER.
Capacity up to 80 tons per hour.

DRY CRUSHING MACHINERY.
COMET CRUSHERS and FINE CRUSHING ROLLS.
RIEDLER PUMPS, RIEDLER COMPRESSORS.
CYANIDE PLANTS.
COPPER SMELTING and REFINING PLANTS.
CONCENTRATION MACHINERY.

PRACTICAL NOTES

ON THE

CYANIDE PROCESS

BY

FRANCIS L. BOSQUI, PH.B.

Superintendent of the Standard Consolidated Mining Company's
Cyanide Works, Bodie, Cal.

A USEFUL, MONEY-SAVING BOOK FOR PRACTICAL MEN.

CONTENTS.

INTRODUCTION.

ILLUSTRATED. PRICE, $2.50.

THE SCIENTIFIC PUBLISHING COMPANY,

NEW YORK:
253 Broadway.

LONDON:
20 Bucklersbury.

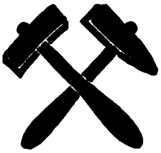

The
Professional
Directory
of
The Mineral Industry.

Preface.

The mere fact that the announcements of the gentlemen and firms appearing under this head do so appear is in itself an index of the wide awake character of the advertisers. They are busy men, seeking more business; and it is not only consistent with high professional ethics but customary for the leading engineers, metallurgists, chemists, assayers, etc., to keep such cards in view.

Among the names here enrolled the inquirer will find many familiar as those of the most distinguished members of the profession and eminent specialists, and he can, by corresponding with them, secure the benefit of the advice of the highest authorities and most experienced mining engineers and metallurgists in the world, the men who have produced the marvellous results which are described in the volumes of THE MINERAL INDUSTRY. The men who have built up the greatest mineral industry in the world and who produced minerals and metals cheaper than anywhere else are safe guides wherever mineral resources are to be developed.

THE PUBLISHERS.

Index.

ABELING, OTTO,
Mechanical Engineer,
Residence: Moscow, Idaho, U. S. A.
Concentration of low grade ore a specialty. Tests on Ores made in any locality. Plants designed based upon results and erection supervised.

ALLAN, J. F., A. M. I. C. E., M. I. M. & M.
Mining Engineer and Cyanide Expert.
Gen. Man. Mexican Gold & Sil. Recovery Co., Ltd.
Don Juan Manuel No. 24, Mexico City.
Reports on Mining Properties and Expert advice on Cyanide Treatment of Ores and Tailings. Extensive knowledge of the country and its minerals.
London Office: Winchester House, Old Broad Street, London, E. C., England. Cable address: "Cyanogen," Mexico. Code used, Bedford McNeill.

ALTHOUSE, HARRY W.,
Mining Engineer.
Room 12, Trust Building, Pottsville, Pa.
Coal Land Development. Coal and Coke Works.

ARGALL, PHILIP,
Mining Engineer and Metallurgist,
Cyanide, Colo.
Manager: Metallic Ex. Co.'s Works, Cyanide, Colo.
Specialty: Treatment of Gold and Silver Ores by Chemical Processes.

BARTLETT, F. L.,
Permanent Address: Canon City, Colo.
General Manager of American Zinc-Lead Co. and New Mexico & Arizona Smelter.
Specialty: Treatment of Zincy Ores.

BEACH, HENRY T.,
Consulting Engineer,
City Hall, Syracuse, N. Y. (P. O. Box 876.)
Formerly Chief Eng. Clearfield Bit. Coal Co., and Div. Eng. New York State Canals.

BENEDICT, W. de L.,
Consulting Mining Engineer,
81 Nassau St., New York.
Cable Address: "Verpear," New York.

BLAUVELT, HARRINGTON,
Mining Engineer and Metallurgist,
Walker, Arizona.
Mines examined and reported upon.

BOSS, M. P.,
Milling Engineer,
809 California Street, Avenida Juareze,
San Francisco, Cal. No. 218 Mexico.
Improved Continuous Pan System.

BOUGLISE, GEO. DE LA,
Mining Engineer,
80 Rue Taitbout, Paris, France.

BRADLEY, FRED W.,
Mining Engineer,
Crocker Building, San Francisco, Cal.
Cable Address: "Basalt, San Francisco."
Bedford McNeill's Code.
General Manager: Bunker Hill and Sullivan Mining and Concentrating Co., Wardner and Kellogg, Idaho; Spanish Gold Mining Co., Washington, Nevada County, Cal.

BRASCHI, VICTOR M.,
Engineer and Contractor,
Apartado 830, City of Mexico, Mexico.
Plans, Specifications and Estimates furnished for Mining and the Reduction of Ores.
Advice on Mining Installations.

BRETHERTON, S. E.,
Chemist and Metallurgist,
Silver City, N. M.
Manager: Silver City Reduction Co.; sixteen years metallurgist and superintendent in Colorado.

BREWER, WM. M.,
Mining Engineer,
Victoria, British Columbia.

BRODIE, WALTER M.,
Mining Engineer and Metallurgist,
P. O. Box 965, City of Mexico, Mexico.

BROWN, ROBERT GILMAN.,
Mining Engineer,
Bodie, Mono County, Cal.
Manager: Standard Consolidated Mining Company.

BROWNE, ROSS E.,
Mining Engineer,
44 and 46 Nevada Block, San Francisco, Cal.

BUTTERS, CHAS.,
Mining Engineer and Metallurgist,
501 Dooly Building, Salt Lake City, Utah.
20 Bishopsgate Street, Within, London, England.

CARPENTER, FRANKLIN R., Ph. D.
Matte Smelting for Gold and Silver,
Deadwood, South Dakota.
References: Fraser & Chalmers Co., Chicago, Ill.; Omaha & Grant Smelting Co., Omaha, Neb.

CASE & WESTERVELT,
Mining Engineers, Metallurgists
and Assayers,
100 William St. (cor. John St.), New York.

CHESTER, EDWARD, & CO.,
Consulting Mining Engineers,
120 Bishopsgate St., Within, London, Eng.
Mines Examined and Reported Upon

CHEWETT, J. H., B.A., SC. C.E.,
Consulting Mining Engineer,
87 York St., Toronto, Ontario.
Experienced in Western Ontario and B. C. districts.

CHOATE, PARKER C.,
Metallurgical Engineer,
38 Wall St., New York, N. Y., U. S. A.
Specialty: Treatment of Mixed Sulphide Ores Containing Zinc, Lead, Copper, Gold and Silver, etc., in Varying Proportions.

CLEMENT, VICTOR M.,
Mining Engineer and Metallurgist,
Care of W. K. Millar, 24 Austin Friars, Throgmorton,
London, E. C., England.

COLLINS, ALONZO G.,
Consulting, Mechanical and Architectural Engineer,
1801 Pabst Building, Milwaukee, Wis.
Water Works, Electric Light and Street Railway Power Houses, Ice Making and Cold Storage, Automatic and Labor-Saving Machinery.

COLLINS, J. H. & SONS,
Mining and Metallurgical Engineers,
Broad Street Avenue, London, E. C., England.
A. L. Collins, F. G. S., and G. E. Collins, Central City, Colo., U. S. A.
H. F. Collins, A.R.S.M., Teapa, Tabasco, Mexico.

COOPER, L. F.,
Attorney-at-Law and Mining Engineer,
Crescent City, Del Norte Co., California.
Copper and Gold Mines and Timber.

CONSTANT, CHARLES L., E. M.,
Assayer and Chemist,
98 Cliff Street, New York City.

CORNING, FREDERICK G.,
Consulting Mining Engineer,
Mills Building, 85 Wall Street, New York.
Cable Address: "Crucible," New York.

CROWELL, BENEDICT,
Mining Engineer,
71 Atwater Building, Cleveland, Ohio.

DENNY, G. A.,
Mining Engineer and Geologist,
26 and 27 African City Properties Trust Bldgs., Market St., Johannesburg, South Africa.
Consulting Engineer to Messrs. Albu.

DEWEY, C. E.,
Mining Engineer,
518 Boston Building. Denver, Colo.
Milling and Treatment of Low Grade Ores.

DOBSON, CHARLES M.,
Mining Engineer,
Mills Building, 85 Wall St., New York.
Examinations. Milling, Advises on Management and Working of Mines. Correspondents: Paris, London, Montana, California, Utah and Colorado.

EVANS, J. W.,
Mining Engineer and Assayer,
Sudbury, Ontario, Canada.

FALDING, FREDERICK J.,
Consulting Engineer,
Aldrich Court, 45 Broadway, New York.
Sulphuric Acid and Chemical Plants.

FARISH, WM. A.,
Mining Engineer,
201 Mining Exchange Building, Denver, Colo.

FISK, WINTHROP W., B. S.,
Mining Engineer,
12 Pearl St., Boston Mass.
Examination, Development and Equipment of Mines.

FOWLER, SAMUEL S.,
Mining and Metallurgical Engineer,
Permanent Address:
Room 201, 84 Clark St., Chicago, Ill.
British Columbia Investigations a Specialty.

FROEHLING, DR. HENRY,
Chemical and Metallurgical Laboratory,
17 S. Twelfth St., Richmond, Va.

FURMAN, H. VAN F.,
Mining Engineer and Metallurgist,
Room 118, Boston Building, Denver, Colo.

GAUJOT, ERNEST,
Mining Engineer,
Williamson, W. Va.,
or Care Engineering and Mining Journal, New York.

GIBBS, FRANK N.,
Civil and Mining Engineer,
Care Produce Exchange, New York.
Manager: The Irwindale Mining Co., of North Carolina.

GIBSON & WEIS,
Assayers and Analytical Chemists,
81 Clark Street, Chicago, Ill.
Assays and analyses of all kinds. Mail orders promptly attended to. Mining properties examined and reported upon. Terms on application.

GILCHRIST, PETER S.,
Chemical Engineer,
Charlotte, N. C.
The Manufacture of Sulphuric Acid a Specialty.

GODSHALL, L. D.
Metallurgist,
Superintendent: Puget Sound Reduction Co.,
Everett, Washington.
Will advise proper treatment for refractory ores.

HAMBLEY, F. G. S., E.B.C.,
Consulting Mining Engineer.
Reports and Examinations Undertaken.
New York Address: Care J. G. White & Co., 29 Broadway.
Until further notice address **Oxford, N. C.**

HAMMOND, JOHN HAYS,
Consulting Engineer, Consolidated Gold Fields,
8 Old Jewry, London, E. C., England.

HARDEN, JOHN H.,
Mining Engineer,
Phoenixville, Chester County, Pa.
Specialty: Coal and Iron.

HARRIS, GEO. W.,
Engineer,
92-94 Liberty Street, New York City.
Reports on Coal Properties. Improved Methods of Mining Coal. Tipple and Coke Oven Plans.

HERZIG, C. S.,
Mining Engineer,
Sierra Mojada, Coahuila, Mexico, care of La Gran Fundicion Nacional Mexicana.
New York Address: 85 West Houston St.

HILLE, F.,
Mining Engineer and Chemist,
Port Arthur, Ont., Can.
Examinations and Reports on Mining Properties, Concentration Plants after Krupp-Bilharz' System.

HIXON, H. W.,
Mining Engineer and Metallurgist,
Superintendent: East Helena Smelter,
East Helena, Mont.

HODGES, A. B. W.,
Metallurgist and Mining Engineer,
Room 21, Laclede Building, St. Louis, Mo.
Construction and Operation of Lead and Silver Lead Smelting Plants a Specialty.

HOFMANN, OTTOKAR,
Metallurgist and Mining Engineer,
Argentine, Kan., care of Cons. Kansas City Smelting and Refining Company.
Chloridizing Roasting and Lixiviation of Silver Ores a special study.

HOLDICH, AUGUSTUS H.,
Analytical Chemist and Assayer,
Nelson, B. C.
Over 30 Years Constant Practice.

HUNT, BERTRAM, F.I.C., F.C.S.,
Chemist and Metallurgist,
216 Sansome Street, San Francisco, Cal.
Agent: Gold and Silver Extraction Co. of America.

IHNE, DR. F. W.,
Mining Engineer,
Mineralogist and Technical Chemist,
President of Polytechnical Society of Chicago.
Consulting, Examining and Reporting.
Office: 920 Medinah Temple, Chicago, Ill.
Residence and Laboratory: 887 North Clark St., Chicago, Ill.
Best References.

JONES, F. A.,
Mining Engineer,
14 W. Missouri Ave., Kansas City, Mo.
Chemist, State Geological Survey of Missouri.
Reports and Exploits American Mines.

JUESSEN, EDMUND, Ph.D.,
Mining Engineer,
806 The Rookery, Spokane, Wash.
Manager: the Idaho Company, Elk City, Idaho.

KERR, MARK B.,
Mining Engineer,
Valley Springs, Calaveras County, Cal.
Gold Gravel and Quartz Mines Surveyed and Report Made as to Value.

KEYES, W. S.,
Mining Engineer,
Pacific Union Club, San Francisco, Cal.

KNIGHT, WILBUR C.,
Mining Engineer and Geologist,
619 Seventh Street, Laramie, Wyo.
Will Make Examinations and Report.

KNOX, SCHLAPP & CO.,
Mining Engineers and Metallurgists,
Broken Hill Chambers,
31 Queen Street, Melbourne, Australia.

LEMON, L. E., B. S.,
Electrical and Mechanical Engineer,
Aurora, Ill.
Plans and Estimates for Lighting and Power Plants.
Expert Testing.

LANG, HERBERT,
Mining and Smelting Engineer,
Albany Hotel, Oakland, Cal.

LAVAGNINO, G.,
Mining Engineer,
Cripple Creek, Colorado.

LEGGETT, THOS. HAIGHT,
Consulting Mining Engineer,
P. O. Box 485, Johannesburg, South Africa.
Cable Address: "Tomleg."

LIDNER, P. G.,
Mining Engineer and Metallurgist,
69 Lexington Avenue, New York.

LOWELL, S. J.,
Mineral Expert and Consulting Engineer,
239 Broadway, New York.
Examinations and Reports on Mining Properties.

LUCKRAFT & COUNTRYMAN,
Mining Engineers,
U. S. Deputy Mineral Surveyors.

J. S. LUCKRAFT,	T. R. COUNTRYMAN, E. M.
12 Hagerman Building,	**Ivanhoe Building,**
Colorado Springs, Colo.	**Cripple Creek, Colo.**

LYON, MOSES H.,
Mining Engineer,
Union Assay Office, Deadwood, S. Dak.

McDERMOTT, WALTER,
Mining Engineer and Metallurgist,
48 Threadneedle Street, London, E. C., England.

MACDONALD, BERNARD,
Mining Engineer,
Butte, Mont.

McKENNA, CHARLES F.,
Chemist and Metallurgist,
Experimental and Testing Laboratories,
221 Pearl Street, New York City.

McCOY, J. W.,
Consulting Mining Engineer,
1202 Owings Building, Chicago, Ill.
Examinations and Reports on Mining Properties.

McNEILL, BEDFORD,
Mining Engineer,
Asso. M. Inst. C. E.,
25a Old Broad Street, London, E. C., England.

MARINER & HOSKINS,
Assayers, Chemists, Mining Engineers,
81 S. Clark Street, Chicago, Ill.
Assays and Analyses of Ores; Weighing and Sampling Car-Load Lots in Chicago and Vicinity.

MAYNARD, GEORGE W.,
Consulting, Mining and Metallurgical Engineer,
Rooms 49 and 50, No. 20 Nassau Street, New York.

MERRILL, C. W.,
Metallurgical Engineer,
University Club, San Francisco, Cal.
Specialty: Cyaniding. Private Laboratory.

MILLER, E. G., & PECK, W. A., C.E.,
Mining Engineer and Assayer,
U. S. Dept. Min. Surveyors,
Room 35, Court House, Denver,
Ohio City, Gunnison County Gold Belt, } **Colorado.**

MOLSON, CHARLES A.,
Mining Engineer,
Helena, Mont.
Care Montana National Bank.

MOSES, OTTO A.,
Consulting Mining and Electrical Engineer,
49 Exchange Place, New York. (Cable: "Florian.")
Examination and Presentation of Properties with moderate water supply and in flat countries adapted to the Lay System of Gold Placer Hydraulic Mining.

MURMANN, GUSTAVUS,
Consulting and Acting Engineer,
Knoxville, or Coal Creek, Tenn.
Examinations and Reports of Mineral, Especially Coal Lands.

NEWBERRY, W. E.,
Mining Engineer,
General Manager: South American Development Co.,
Zaruma, Ecuador.
Permanent Address: Colorado Springs, Colorado.

NICHOLSON, FRANK,
Consulting Mining Engineer and Metallurgist,
Gen. Manager: Cons. Gold Fields of Mexico, Ltd.
Addresses:
New York: 253 Broadway, care Engineering and Mining Journal.
London: F. C. Poisson & Co., Bartholomew House, E.C.
Mexican address: Banamichi, Sonora, Mexico.
Cable address: "Nickhop."

OLCOTT, FEARN & PEELE,
Mining Engineers and Metallurgists,
18 Broadway, New York.
Cable Address: "Kramolena."

PARKER, RICHARD A.,
Consulting Mining Engineer,
Crocker Building, San Francisco, Cal.
Cable Address: "Richpark."

PARRY, J. M. B.,
Mining and Metallurgy,
(P. O. Box 512.) Aspen, Colorado.

PETERS, EDWARD, D., JR.,
Mining Engineer and Metallurgist,
Percival Ave., Dorchester. Mass.
Attends exclusively Copper Mining and Smelting.

PETRE, REGINALD W.,
Mining Engineer,
713 St. Paul St., Baltimore, Md.
Mines Examined and Reported Upon.

PHILLIPS TESTING LAB'TORY.
All Kinds of Chemical Work.
Reports on Mining Property and Technical Processes.
Office and Laboratory at Birmingham Rolling Mill, Birmingham, Alabama. Address P. O. Box 346.

PIERCE, FRANK,
Mining Lawyer,
Salt Lake City, Utah.

PITTSBURG TESTING LABORATORY, LTD.,
Inspecting and Metallurgical Engineers and Chemists,
325 Water Street, Pittsburg, Pa.
Geo. H. Clapp, Chairman.
Alfred E. Hunt, Vice-Chm. and Treas

PRATT, N. P.,
Laboratory for Analytical and Technical Chemistry,
Atlanta, Georgia.
Assays and Analyses. Chemical Engineering.

PRITCHETT, C. W., JR.,
Consulting Mining Engineer,
Apartado Postal 856, City of Mexico, Mexico.
Member Am. Inst. Mg. Engrs., N. of Eng. Inst. Mg. and Mech. Engrs.
Reports on Mines, Plans, Surveys, Locations.
Assays and Analyses of Ores and Metallurgical Products.
Reference: W. Guggenheim, with Guggenheim Smelting Co., New York.

RAYMOND, ROSSITER W.,
Mining Engineer and Metallurgist,
18 Burling Slip, New York. (P.O. Box 228.)

RICKARD, FORBES, F.G.S.,
Mining Engineer,
Central City, Colo.
Examines and Reports on Mines.

RICKARD, T. A.,
Mining Engineer and Metallurgist,
608 McPhee Building, Denver, Colo.
Geologist for the State of Colorado.

ROBINSON, G. H.,
Mining Engineer,
Salt Lake City, Utah.

ROTHWELL, JOHN E.,
Mining Engineer,
Care Engineering and Mining Journal,
253 Broadway, New York.
Specialty: The Construction and Operation of Barrel Chlorination and Cyanide Process Mills.

ROTHWELL, RICHARD P.,
Mining and Civil Engineer,
Editor: Engineering and Mining Journal,
253 Broadway, New York.
Examines and Reports on Mineral Properties.
Advises on the Working and Management of Mines.

RUHM, HERMAN D.,
Engineer and Manufacturers' Agent,
Phosphate Land and Rock,
Mt. Pleasant, Tenn.
Offices: 28-30, Ch. Com. Building, Nashville, Tenn.

RUTTMANN, FERDINAND,
Mining Engineer,
45 Broadway, New York.
Cable Address: "Ruttmann," New York.

SCHAFER, F. J.,
Mining and Milling Engineer,
Chimbote, Peru.
Information Regarding the New Gold Discoveries in Peru can be Furnished.

SIMPSON, ALEXANDER GRAY,
Practical & Consulting Mining Engineer,
21 Quincy Street, Suite 518, Chicago, Ill.
Reports and Examinations on Mining Properties of All Kinds.

SKEWES, EDWARD,
Mining Engineer,
Perth, West Australia.
Mines Examined.

SMITH, FRANK CLEMES,
Mining Engineer and Metallurgist,
Deadwood, South Dakota.
Superintendent: Golden Reward Consolidated Gold Mining and Milling Co.

SONNEMANN, GEORGE A.,
Mining Engineer,
1718 Jamieson Block, Spokane, Wash.
Examines and Reports. Directs Mining Operations in British Columbia and Northwestern U. S. A.

SPRAGUE, TIMOTHY W., S.B.,
With CHARLES H. DAVIS, C. E.,
Consulting Engineers,
99 Cedar St., New York. 4 State St., Boston.
Drexel Building, Philadelphia.
Electric, Pneumatic and Rope Installation for Mines.
Reports, Specifications and Supervision.

STALMANN, OTTO,
Mining and Metallurgical Engineer,
Salt Lake City, Utah.

STICKNEY, CHARLES WADE,
Mining and Metallurgical Engineer,
Antelope, Idaho.
Specialty: Copper Mining, Concentration, Smelting, Converting.

STOIBER, EDWARD G.,
Mining Engineer,
P. O. Box 129, Silverton, San Juan Co., Colo.
Silver Lake Mines.
Advises on San Juan County Mining Investments.

STOW, AUDLEY H.,
Mining Engineer,
Matewan, W. Va.
Specialty: West Virginia and Kentucky Coal Fields.

THIES, ADOLPH,
Mining Engineer,
Haile Gold Mine, S. C.
Specialty: Chlorination of Gold Ores.

TRENT, L. C.,
Mechanical and Metallurgical Engineer,
Salt Lake City, Utah.
Special attention given to Blast Furnace Work and Copper Refining by the Bessemer Process. Also designs furnished for Gold, Silver and Copper Reducing Machinery. Correspondence Solicited.

UNZICKER, HERMANN,
Mechanical and Mining Engineer,
1745 Arlington Place,
Chicago, Ill.

VAN SLOOTEN, WILLIAM,
Mining Engineer and Metallurgist,
35 Wall St., New York.

VEZIN, HENRY A.,
Mining and Mechanical Engineer,
Office: 520 Boston Building, Denver, Colorado.
(Address) P. O. Box 256.

VOGEL, HERMANOS,
Mining and Mechanical Engineers,
Metallurgists,
Apartado 331, Mexico, D. F.
Cable Address: "Vogelos."
Reports on Mexican Mines a Specialty.

WARREN, H. L. J.,
Information on Utah Mines Supplied.
Walker Bank Building, Salt Lake City, Utah.

WARTENWEILER, A.,
Mining Engineer and Metallurgist,
Mills Building, San Francisco, Cal.
Cable Address: "Warten."

WEIR, THOMAS,
Consulting and Mining Engineer,
McCornick Block, Salt Lake City, Utah.

WESTON, W.,
Consulting Mining Engineer,
Colorado Springs and Cripple Creek, Colo.
Member American Institute of Mining Engineers.
Member Institute Mining. and Metallurgy, London.

WHITE, ROGERS & CO.,
Consulting and Contracting Engineers,
306 Pine Street, San Francisco, Cal.
Sole Pacific Coast Agents and Builders of the Celebrated Wilfley Concentrators.
Stamp Mills, Hoisting Works, Concentrating Plants and all Descriptions of Mining Machinery.

WILLIAMS, RICH. HY., M.A.I.M.E.
Supt. United Mexican Mines, Ltd.,
Guanajuato, Mexico.
Reports on Mines. Preparation of Ores a Specialty.

WINSLOW, ARTHUR,
Mining Engineer and Geologist,
104 West Ninth St., Kansas City, Mo.
General Manager and Consulting Engineer: United States & British Columbia Mining Co., Liberty Bell Mining Co.

WISHON, WALTER W.,
Mining Engineer,
Butte, Montana.
Cable address, "Wishon," Butte: Moreing and Neal Code. Mining properties examined throughout the Northwest and British Columbia.

TH

THE MO

ED

ABSOLUTELY IND

IGINEER,

METALLURGIST,

ISLATOR.

For $5.00
Mexico and Canada

in the Postal Union

English Subscriptions may be paid at London office at rate of $7—£1 8s. 9d.

PUBLISHED WEEKLY.

THE SCIENTIFIC PUBLISHING CO.,
PUBLISHERS,

NEW YORK:
253 Broadway.

LONDON:
20 Bucklersbury.