the Mineralogical Record

Volume Five/Number Three

$1.25

the Mineralogical Record

Volume Five/Number Three
May—June, 1974

affiliated with the Friends of Mineralogy

feature articles

departments

These four postage stamps have been issued in Commemoration of our Mineral Heritage. They were "unveiled" in Tucson in February of this year and issued at the National Gem and Mineral Show, Lincoln, Nebraska, on June 13.

design & composition
Bowie Graphic Art Services, Inc.
2209 Defense Highway
Crofton, Maryland

address
the Mineralogical Record
Post Office Box 783
Bowie, Maryland 20715
Telephone: 262-8583

editorial matter

Contributed manuscripts and news items are welcomed, but acceptance is subject to the approval of the editorial board. They should be mailed to the editor at the aforementioned address, and should be accompanied by a stamped, self-addressed envelope. No responsibility can be assumed for unsolicited material.

publishing information

The Mineralogical Record is published bimonthly by the Mineralogical Record, Inc. P.O. Box 783, Bowie, Maryland.

subscriptions

The Mineralogical Record costs $6.00 per year in the United States, Canada and Mexico. All other countries, $7.00 per year.

Second class postage paid at Bowie Md. 20715

GUEST EDITORIAL

On Guest Speakers and Courtesy

Pete J. Dunn

Mineral clubs are constantly in search of interesting and talented speakers to present programs at their monthly meetings or mineral shows. Usually, an officer or the program chairman will approach a prospective speaker with the request that he address the mineral club on a certain date. Since courtesy in this matter is largely a matter of local opinion and tradition, some thoughts are offered here on the courtesies to be considered and the responsibilities to be assumed by the host club or society.

The intial contact is usually made by telephone and this should be followed by a letter stating the date, time and place of the meeting. If the host club would prefer that the guest speaker discuss a certain topic, this should be clearly stated in the initial conversation. A frank and open discussion of the willingness of the host club to pay all related expenses such as air fare, lodging, meals and incidentals should also be a part of the original discussions and should be initiated by the representative of the host club. Whether or not the club offers an honorarium to its guest speakers should be frankly discussed at the outset of the request. All matters of expenses should be detailed without embarrassment by the club representative. It is far better to inform your prospective speaker of club policies than to leave the matter vague and open to all sorts of misunderstandings.

Ideally, actual transportation arrangements should be left to the discretion of the speaker but at the expense of the host club. If a speaker must come from a distant city, the club should express a willingness to pay for travel by air, and if the speaker drives to the meeting, he should be offered a mileage rate plus all tolls and highway expenses. If the speaker arrives by air, there should be a club member at the airport at arrival time to provide the necessary transportation. It is best not to arrange lodging in a private home without first giving the speaker a clear choice of a motel or hotel which he may prefer and yet be reticent to insist on having.

Some mineral clubs have a custom of taking the guest speaker out to supper before or after the meeting. This also should be at the discretion of the speaker and if the dinner is in lieu of an honorarium, this should be clearly stated in advance. Your speaker is frequently a professional mineralogist or educator whose personal interests might not be compatible with society business meetings. Hence, it is a furthur courtesy to inquire if your speaker would prefer to present his lecture or discussion before the business meeting so that he may depart after his presentation. The host club should inquire of the needs of the speaker such as slide projector (type ?), chalkboard, chalk, pointer, microphone, specimen table, water pitcher and glass, and see to it that the necessary items are provided. The initial contact, if favorable, should be followed up by a phone call shortly before the meeting to make any final arrangements and as an additional reminder to the guest speaker. A note of thanks from the president of the host club should follow the lecture. This both conveys appreciation and lays the groundwork for another lecture another year. Whether or not your speaker is paid for his services, the speaker is doing the club a favor by agreeing to participate. It is incumbent upon the president of the host club to provide a proper introduction of the speaker with comments on his background and experience.

In brief, the foregoing is a plea for representatives of mineral clubs to proceed in their quest with the utmost consideration for the speaker. It is hoped this will bring about a greater willingness on the part of the professional to share his knowledge and, on the part of the mineral clubs, a greater understanding of the courtesies due a speaker who is willing to address your mineral club.

FM friends of mineralogy

FM PROJECTS

Arthur Montgomery, FM Column Editor

The main purpose of this column is to publicize current activities of Friends of Mineralogy. Of greatest importance are those projects enlisting widespread membership participation and designed to strengthen descriptive mineralogy through heightened intellectual interest in and altruistic concern for mineral specimens, the heart of the science. Such interest and concern deal with their localities and occurrences, their cultural appreciation and educational use, their beneficial preservation. Two major FM projects of international scope, now being initiated or considered, are briefly described here. More will be written about their progress in the future. Interested readers are encouraged to send in letters, addressed either to this column or to the editor of *The Mineralogical Record*, expressing their views, whether pro or con, on the matters treated.

An ad hoc FM committee has been formed, at the instigation of president Earl Pemberton, to promote mineral locality preservation. Its chairman is Davis M. Lapham, mineralogist of the Pennsylvania Geological Survey, and its several committee members will represent wide sectors of this country as well as Canada and Great Britain. The committee's major objectives include those of defining and recommending goals to be sought by FM in locality preservation; proposing general procedures to be followed, and applicable to all regions, in implementing an acceptable program to achieve those goals; proposing procedures to apply more narrowly to specific regions; listing and clarifying problems apt to be encountered in locality preservation together with suggestion of means for their solution.

It is expected that a detailed report dealing with these goals and recommending ways and means to achieve them may be completed by the committee no later than January 1, 1975. The report hopefully will be summarized in this column.

Compilation and effective registration of data on mineral localities by FM members in various regions can prove of immense value to mineralogy. These localities are not only the source sites of the specimens found in collections and scientifically studied, they are also the key to understanding the geologic occurrence and origin of those specimens. Some important localities, now endangered through encroachment by man, might be preserved. for further collecting or as historic or scientific mineralogical sites, once enough organized effort is directed toward that end through enlightened public education. Dr. Lapham has been a key figure and pioneer in FM's concern for and already considerable involvement in the cause of mineral locality conservation.

One problem facing this committee in making its recommendations concerns the manner of registration of data on active and new mineral localities in each region. Should these data files be published and made widely available? Some British FM members feel that such a policy can prove harmful to mineralogy and work against beneficial utilization and preservation of localities. These arguments need to be fully considered. On the other hand, where data on new localities have been published and made available to all interested persons, as has been done in recent years in several amateur-oriented mineralogical publications in Pennsylvania, the results appear to have been extremely beneficial to the science and to have encouraged more educationally-inspired collecting and a better spirit of generous sharing of specimens among collectors and institutions. It is true, however, that in Pennsylvania (covering most of Region 3) there is strong interest in the state mineralogy and adding to lists of state minerals. This work goes on as a joint effort by professionals and amateurs, with FM's collecting and locality-preservational activities adding greatly to its vigor and scope. We see here the possibility that concern for compilation of descriptive and scientific data on the minerals of a geographically-limited area or state may be a key to channeling collecting efforts by members of FM and local amateur mineral groups into fruitful fields of educationally-oriented endeavor.

A second major FM project now underway is the preparation of a standardized mineral locality-name register. This will be a simplified validated list of the names of mineral localities most commonly represented on specimen labels used in mineral shows and public exhibits. Many of these names are now in a chaotic state, with general confusion existing through lack of aggrement on standardized spelling, accurate and simplified geographic location, and updated national designation. John S. White proposed the project and asked FM to implement it. Barbara Frank Muntyan has been named by FM as general chairman to carry this project through.

A beginning will be made by enlisting the cooperation of FM members on a world-wide basis to prepare lists of the names of localities commonly shown on specimen labels in competitive and noncompetitive exhibits at mineral shows and in public exhibits such as museum displays. These lists will be reviewed in the regions and agreement reached on a recommended list which will be sent to the general chairman. The proposed locality names will then be grouped according to country or broad geographic region and submitted for review by referees qualified to confirm the locality designations of those areas.

The final validated list will be printed under FM auspices and made available to all interested persons. Great benefit should accrue to collectors, museum curators, and all those concerned with improving the accuracy and standardization of locality names.

All news and material relating to FM, for Record *publication should be sent to Dr. Arthur Montgomery at: Dept. of Geology, Lafayette College, Easton, Penna. 18042.*

Virginia Polytechnic Institute Receives Two Collections

During 1973 the Department of Geological Sciences at Virginia Polytechnic Institute and State University, Blacksburg, received two mineral collections which considerably supplement the school's teaching, reference, and exhibit collections.

The mineral collection of Kent C. Brannock was divided between the Smithsonian Institution and VPI by bequest. Casey Brannock was a "Tech" graduate and chemist with Kodak in Kingsport, Tennessee (see obituary *MR* , **4**, 83).

A large portion of Casey's collection was personally collected from localities in eastern Tennessee and western North Carolina. Particularly well represented were the pegmatite phosphates from the Foote mine at Kings Mountain and the Lithium Corporation of America's mine at Bessemer City. Through persistent letter writing Casey was able to exchange his personally collected specimens widely. He thus acquired a wide variety of species from many of the classic localities. His purchases were modest and constitute only a small portion of his collection. VPI received five hundred pieces representing about forty percent of the collection.

John Gruger of Beltsville, Maryland, a past president of the Mineralogical Society of the District of Columbia, died late last spring of leukemia at the age of thirty-two. His collection was donated to VPI by his wife, Judy, largely through the efforts of Angelo Cicolani, Current president of the MSDC.

John, like Casey, was an active field collector and his collection was almost entirely self collected. Prehnite and apophyllite from Virginia, brucite and hydromagnesite from Cedar Hill, calcite and strontianite from Winfield, Pa., and quartz from Herkimer County are all abundant. John had more of a taste for geology and the rock-forming minerals than many. Thus the Rockville Crushed Stone quarry near Rockville, Md. was his favorite among all of the active quarries in the Middle Atlantic States. Among the many Rockville pieces are etched calcite veins containing clinozoisite, diopside, and vermiform chlorite; the unusual species coalingite; and possibly a new species. The collection contained four hundred fifty-three catalogued pieces with much trading stock and much left untrimmed. John's micromount collection was given to Grant Edwards, his close friend and collecting partner.

These two collections have been a substantial addition to VPI's existing collections and have already been put to use in the class room and research laboratories.

THE COLLECTOR

by Richard A. Bideaux

In my last column on the minerals handled by Dr. A. E. Foote, perhaps you noticed his comment under Arizona minerals: "Probably the most remarkable discovery made was that of the two new species described by Prof. G. A. Koenig, Paramelaconite, an oxide of copper in fine large crystals resembling Anatase, and Footeite, an oxychloride of copper in well-defined blue crystals... " A quick check of Fleischer's *Glossary* will turn up paramelaconite, $Cu^{+2}_{1-2X}Cu^{+1}_{2X}O_{1-X}$, but footeite, named for Dr. Foote, unfortunately hasn't persisted to the present day. Let's trace its history and see what happened.

Paramelaconite and footeite were first described by a noted American mineralogist of that time, working at the Philadelphia Academy of Natural Sciences, the city and institution regarded as the birthplace of American mineralogy. Writing in the *Proceedings* of the Academy for 1891, p. 284-291, Koenig states:

"On his recent visit to the Copper Queen Mine at Bisby (sic), Arizona, Dr. A. E. Foote obtained possession of two specimens showing crystals, which he could not associate with any known species except Anatase. The locality and association, however, speak strongly against the presence of that or any other form of the Titanium dioxide. These specimens have since passed into the collection of Mr. Clarence S. Bement who has kindly permitted me to examine and study them."

"One of these specimens has been deemed to be of sufficient importance to be represented in the adjoining figure as a whole, to show the relation of the associated minerals. It is drawn to natural scale." (Also reproduced here as fig. 1).

"We see as the central figure a monolithic crystal (A) lying flat upon the supporting surface, but so that the pyramidal termination is entirely free and symetrically developed. To the left there are three more pyramidal crystals of the same kind, but of smaller stature. These crystals are characterized by the most brilliant metallic adamantine luster, and purplish-black color. The crystals stand in relief against a background of minute acicular crystals of deep blue color (B). Upon the crystals are patches of a beautiful light greenish or silvery-white substance, which have not been individualized in the drawing, as color only could bring them out properly. The nature of both these substances will be discussed below. Under (C) are represented small, brownish-black mamillae of limonite, shown in section at (D), exhibiting a distinct radial structure. This layer of limonite passes rapidly into a granular mixture of limonite and cuprite (E) of brownish-red color and in this we see imbedded at (F,O) crystals of native copper. Since we find both crystals and silvery patches on the large crystals, the genetic relation appears as follows, E, F & D, C, A, B."

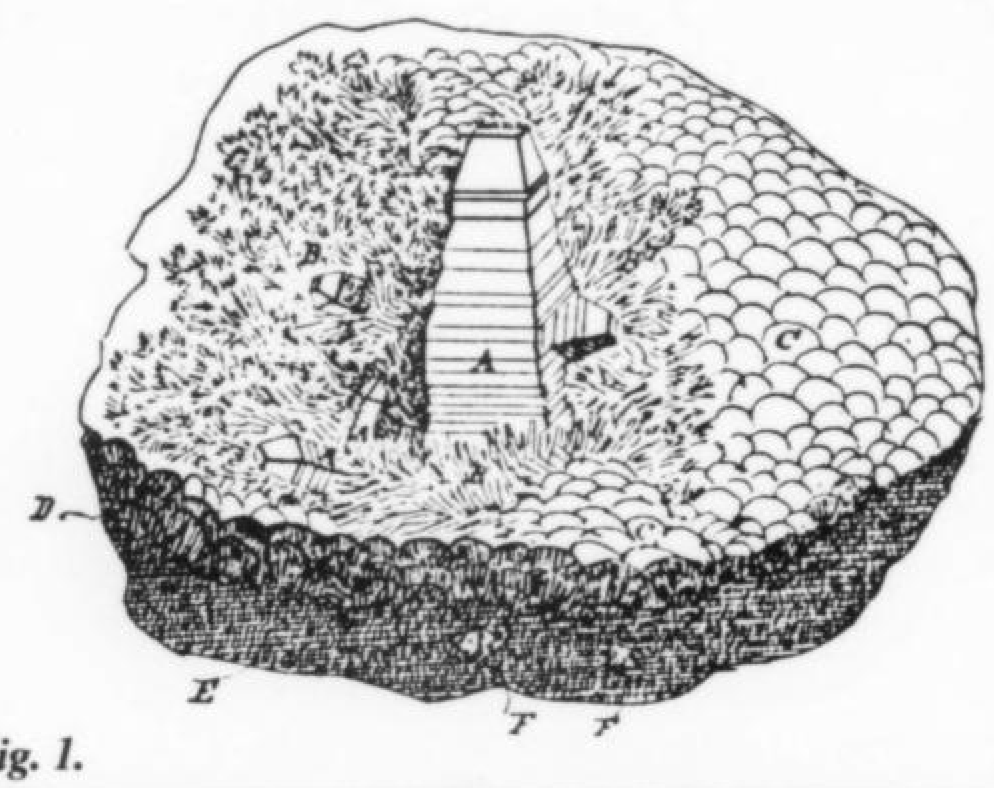

Fig. 1.

"The second specimen is about 3 x 4 inches in size. (Shown here as fig. 2). It looks as if it had formed at one time a part of the same large slab of which the first specimen is a fragment. Some twenty odd beautiful crystals like (A) but of smaller size, not over ½ inch in length, are either lying flat or stand erect upon the mamillary mixture of limonite and cuprite. One large blue crystal (B) and several bundles of the same are stretched across the black crystals. The latter are covered in part, mostly upon the strongly striated faces with the greenish-silvery substance mentioned above, which coating produces the impression of a patina on dark bronze."

Koenig goes on to show that the black crystals, while tetragonal, have substantially different interfacial angles than anatase. From his quantitative chemical analysis he believed this mineral to have essentially the same composition as tenorite, CuO, otherwise known as melaconite. Tenorite only rarely forms crystals, which were believed at Koenig's time (before x-rays) to be monoclinic (correctly) or triclinic. As this new copper oxide had a different crystal form, he concluded that it must be a crystallographic alternate, or dimorph, of CuO, and therefore named it paramelaconite. Paratenorite would perhaps have been a

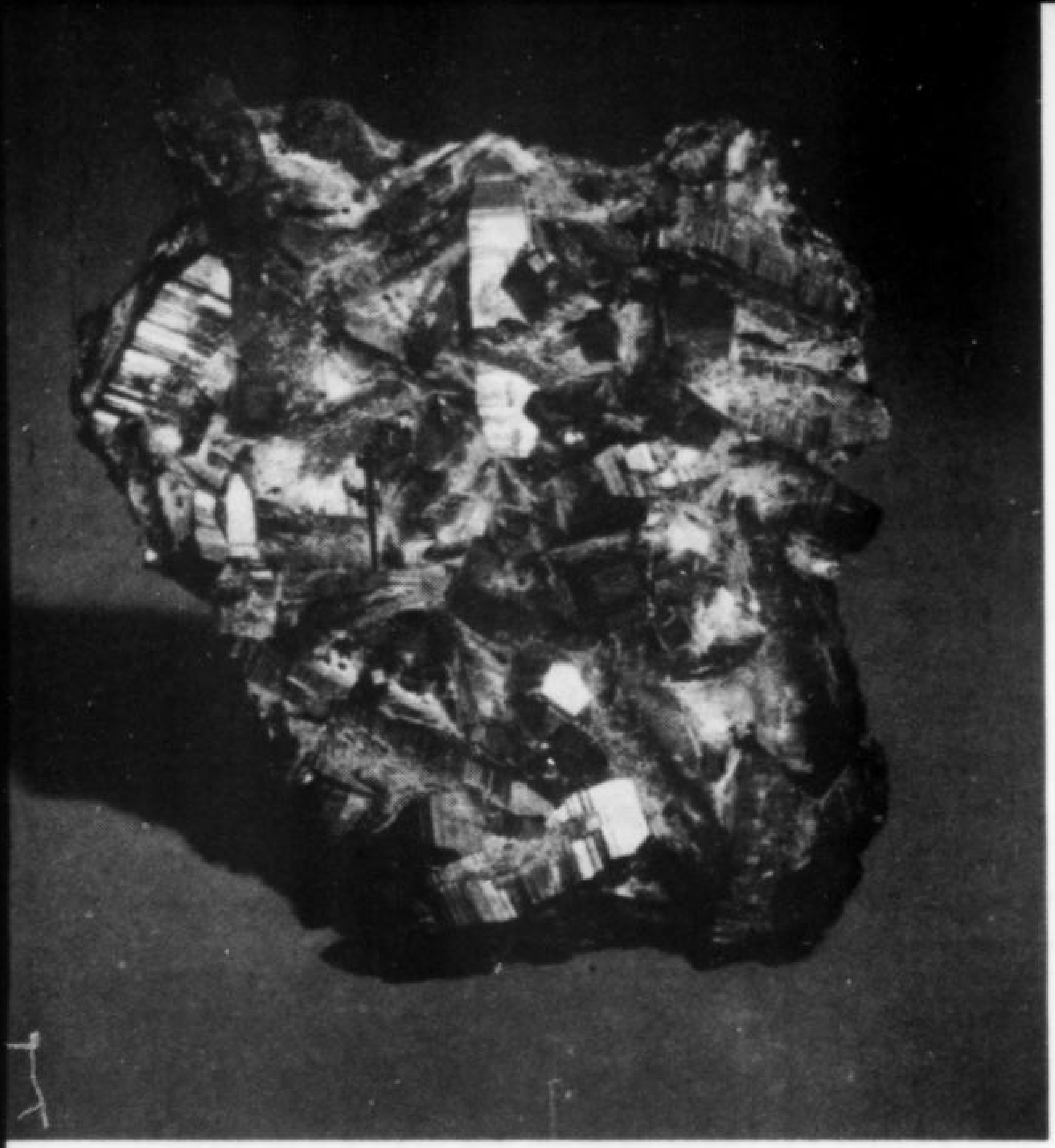

Fig. 2.

better nomenclatural, but equally misleading mineralogical, term as we will eventually see.

The "minute acicular crystals of deep blue color" were also analyzed by Koenig. He says "The material to work on was very scant. Dr. Foote sent me broken off crystals from which I was enabled to pick out about 25 mg. of pure material, with which quantitative examinations were made. It was not deemed advisable to disfigure the beautiful specimen (fig. 1) for the sake of more material... " He determined the mineral to be a "chloro-oxyhydrate of copper," with composition apparently unlike any other species, justifying the new mineral name footeite.

He determined the green asbestiform mineral on the paramelaconite to be malachite in felted masses of minute needles.

And there matters stood until 1915 (twenty years after Dr. Foote's death) when W. E. Ford and W. M. Bradley published their article on a re-examination of footeite, in the *American Journal of Science*, p. 670-676. In the introduction to this article they write:

"Some time ago a suite of specimens from the Bisbee District was sent to this Laboratory (the Mineralogical Laboratory of the Sheffield Scientific School of Yale University, the leading mineralogical research institution of *that* time) by the Foote Mineral Co. of Philadelphia. These specimens were of cuprite upon which occurred small radiating groups of slender prismatic crystals having a beautiful blue color. Tests upon the latter showed that it was a hydrous copper chloride and at first it was considered to be the rare mineral, footeite. This conclusion was strengthened when, through the courtesy of Mr. L. P. Gratacap of the American Museum of Natural History in New York City and of Dr. W. T. Wherry of the National Museum in Washington, it became possible to compare the Bisbee mineral with specimens of the original footeite. Optical tests showed that the two were identical."

(Note that in the interim, Bement's collection had been acquired by J. P. Morgan, then the American Museum. The specimen in fig. 1 is on display there today. The specimen in fig. 2 was on loan to the National Museum for many years, and was finally permanently acquisitioned through exchange, where it may also be seen in the display collection.)

"A little later specimens from the Tintic District, Utah, were sent to us by Mr. Lazard Cahn which showed a mineral almost identical in appearance and association with the blue mineral from Bisbee. This mineral was labelled connellite and upon testing gave the expected reactions for a small amount of the sulfate radical. (The *Glossary* shows a chemical formula of $Cu_{19}Cl_4(SO_4)(OH)_{32}\cdot 3H_2O$ for connellite, indicating that the (SO_4) sulfate group is a necessary component of the mineral.) This naturally led to a more detailed examination of the mineral from Bisbee and it was found that the original tests had been incomplete and that it also contained sulfuric acid and was therefore connellite. Further, a test made upon a small crystalline fragment from one of the specimens of the original footeite preserved in the American Museum of Natural History gave the same reaction. As the optical and crystallographic characters of these three occurrences also agreed perfectly with those given for the original connellite from Cornwall, there was no question but that they all belonged to the same species. As the name, connellite, has priority over that of footeite, the latter must therefore be discarded..."

Connellite was first mentioned as "copper ore of an azure blue color, composed of needle crystals," and figured in *Specimens of British Minerals selected from the cabinet of Philip Rashleigh*, part 2, 1802. The color shown is rather accurate, but the delineation is not such as can well be shown here. Arthur Connell correctly analyzed the mineral as a sulphato-chloride of copper in 1847, and J. D. Dana named it for Connell in 1850.

According to the law of priority, when an adequately described mineral species is later mistakenly redescribed and renamed, this latter name must be discarded and never reused when the mistake is discovered. This prevents even more chaos from creeping into our present-day nomenclature.

Connellite has always been an exceedingly rare mineral, but highly prized by collectors for its deep methyl blue color. It is now known from less than a dozen localities, with specimens plentiful at none of these. The crystals seem nearly always to be small, most suitable for micromounts. The crystals on the paramelaconite specimen of fig. 2 are giants of their kind. I once saw a Bisbee connellite, an apparently pure mass of radiating but clumped crystals, the whole nearly the size of my fist - almost certainly more connellite in this single specimen than in all others combined.

The even rarer, and visually indistinguishable mineral buttgenbachite was described in 1925 as the (NO_3), nitrate, analog of connellite. The crystal structure of connellite has lately been determined by W. J. McLean and J. W. Anthony, in the *American Mineralogist,* **57**, 1972, p. 426-438. They found the idealized end-member composition to be $Cu_{37}(SO_4)_2Cl_8(OH)_{62}{\bullet}8H_2O$, with the (NO_3) able to substitute for (SO_4) in large "zeolite-like" channels in the structure.

AN AMERICAN IN ALTDORF

Jack Halpern
45 Forest Side Avenue
San Francisco, California 94127

A mineral enthusiast touring Switzerland today cradles in his head thoughts of those treasures of the Swiss Alps the like of which have been uncovered in few, if any, other localities. He conjures large, sparkling, delicate roses of silvery or black-petalled hematite from the Ritter Pass. He thinks longingly of euhedral quartz crystals, sharp and of superb clarity, some colorless-clear and some brown-smoky but still of the purity of optical glass. He daydreams of "gwindels"—strangely twisted smoky quartz crystals from Val Giuv. He pictures oriented overgrowths of reddish rutile prisms on hematite plates from Cavradi; adularia, albite, anatase, brookite and ilmenite from the Maderanertal; calcite from the Jura Mountains and from the Central Aar Massif; dolomite from the Gotthard; anhydrite from the Simplon; magnetite from the Binnatal; pink fluorite matrixed on granite from Göschener; vesuvianite from the Zermatt area; sphalerite, epidote, titanite, and still other crystals from the high reaches of this splendid country.

He knows all too well that fine specimens of these minerals are essentially treasures of the past and scarcely being taken in notable samples today. He learns soon enough that those in private collections and in museums are frequently out of reach, not available either through purchase, through trade, or through any other channel.

With these appetites, with this foreknowledge of the scant possibilities for quality acquisition, and with my wife, Leslie, at my side, I motor to Altdorf, skirting spectacular Lake Lucerne as I enter William Tell country in the canton of Uri. Here, I know from my friend, Fred Ernst (the Swiss vice-consul in San Francisco), is a coffee house in which are displayed choice Swiss mineral crystals, mostly the products of the searches, the tunnel-building, the avalanche-endangered quests of earlier times. The "Kristall Cafe", it is called, and the specimens are the coveted property of the proud proprietor.

Leslie and I enter the small, modern, immaculate, attractive cafe' in the tiny town of Altdorf hard upon the Gotthard Pass. My breath is intaken sharply and I am aware of cardiac acceleration as I make initial visual contact with the eminent and admirable collection of Alpine minerals displayed here by the cafe'-owner, Hans Hugeinen, and his wife. The mineral array serves their own edification, and caters to the pleasure of their customers and their friends. Be assured that the quality is such that these human needs are indeed well-served.

Specimens are beautifully displayed in well-illuminated glass cases, securely locked, and include perhaps 90 per cent Swiss material, some of it self-collected, much of it purchased from strahlers and from mineral dealers. None of it is for sale. Much of the Swiss content reflects a quality and crystal size rare to today's collecting in Switzerland.

Hans is very proud of his pieces, knowledgeable of their rarity, almost fiercely nationalistic and protective of his cache of mineralogical relics which appear to include the best of what was available only the day before yesterday. No, he will sell nothing, one learns from his pretty wife, Mary, who speaks some English. (Hans speaks a local vernacular, no English.)

What about trading? He has a basement full of material available for purchase or trade, you learn, and you are taken downstairs. (You carry with you your supply of trading material, including four choice Keeweenaw coppers, two of them in calcite, a third carrying the label of a top mineral museum, but you make no mention of them as yet.) The basement material he offers is basement quality, no better, and a distant cry from the magnificent material upstairs.

You show no enthusiasm for his sub-strata offerings, and ask if he would like to see some interesting material from North America. He would. You reach into your bag and bring forth a choice Michigan copper in calcite you had just acquired from Walt Lidstrom. Hans does not mask his interest or his approbation. He appreciates its rarity and its quality, you garner, as he converses with his wife (who, you learn, provided his introduction to mineralogy some years back). You state firmly (in English) that you brought with you your finest coppers, the best currently offered in America from a by-gone day, in hope of making an exchange for some fine Swiss specimens from a by-gone day, and ask Mary to translate this to him. You are not sure that she has understood your English. Your wife, Leslie, helpful as ever, repeats in German your comment, having previously learned that Mary speaks German, as seemingly do most Swiss. Mary then translates your statement, reinforced by Leslie's clarification, into the local dialect for Hans.

"Nein" is his immediate, crisp, tart rejoinder, accented by a rapid, side-to-side head motion, which, you have observed everywhere you have ever been, has the universal meaning of negative.

You reach into your bag, bring out another beauty. "Schön", you hear, accompanied by a glance of admiration for the specimen. You offer it as trading stock. Hans points to his basement material, offering it in return. You state that your interest lies in some of his upstairs duplicates, recalling aloud that his display collection possesses considerable depth with several choice units of each of the major Swiss minerals represented.

The expletive "Nein" sounds again.

You cajole. You express your genuine disappointment in failing to find your generosity matched by his, and ask his wife, Mary, to translate this to Hans. With Leslie's help, she does.

Hans glowers, appreciating the coppers you have brought but not wanting to surrender what he considers to be his irreplaceable Swiss crystals. You take his arm and guide him upstairs to his magnificent array. En route, he manages to communicate, "What is your interest?"

You reply, instantly, "Rauschquarz gwindel". He corrects your pronunciation of the second word to "Qvindel". You continue, "Rosa fluorit". He howls, and throws his hands skyward. What a joke you have made! Rosa fluorit, no less! Hen's teeth, no more! You end with "Eisenrose".

He says, for the 99th time, "Nein". You point to specific standouts in his collection. "Nein", he says again but you continue, this time pointing to another lesser but still fine example of the same mineral. He says nothing. (Ah, celestial music.)

And so it goes, torturously, with greatest difficulty, frowningly, until at last, he reaches for a key and opens a case, removing a small but sharp eisenrose on matrix, locality: Cavradi, and setting it down but not offering it. You continue your refusal to accept his "Nein" with anything but renewed pointing. No avail, at first, but eventually, he unlocks another case, removing a specimen of fine, clear, dark, small smoky quartz crystals with large, well-formed pink fluorite crystals, their inner good color visible from the rear of the specimen, their outer surface clouded by a matte-like finish. You thank him: "Danke". He says nothing.

On the subject of the twisted smoky quartz, he is adamant, refusing firmly even to consider the matter. He ushers you to the basement. You go, but raise again your need for this mineral. You show him some good Mexican adamites you have brought with you. He turns them down firmly, conveying through translation that he can obtain such specimens from local dealers.

His gaze returns to your finest copper. You beg him to go upstairs with you again. He reluctantly consents. Fifteen minutes later, he removes a choice, clear, twisted smoky quartz crystal from one of his cases, a fine and substantial specimen. He informs you, through translators, that he is most reluctant to part with this specimen as it was Mary's first present to him. This disclosure plucks Leslie's heartstrings, which twang as tears well. She looks at you almost harshly, with a "How could you be so cruel?" expression lurking in her eyes and at her mouth-corners. You change the subject, wondering if you are indeed heartless.

Hans sets down the three Swiss specimens he has chosen for you. He selects from your American offering the finest copper in calcite and one other, an excellent specimen of copper which resembles modern sculpture. You shake hards, smile warmly, and both collapse.

He recovers. He wraps your three specimens. You box his two choices and give him your labels, including those of prior owners. At your request, he provides full locality information on your new Swiss acquisitions.

You and Mary and Leslie and Hans exchange warm farewells. You leave. You are happy. You wonder if Hans is happy. You wonder if Leslie and Mary are happy.

AN OCCURRENCE OF VIVIANITE NODULES IN NORTH CAROLINA

by Pei-lin Tien
Department of Geology, East Carolina University, Greenville, North Carolina 27834

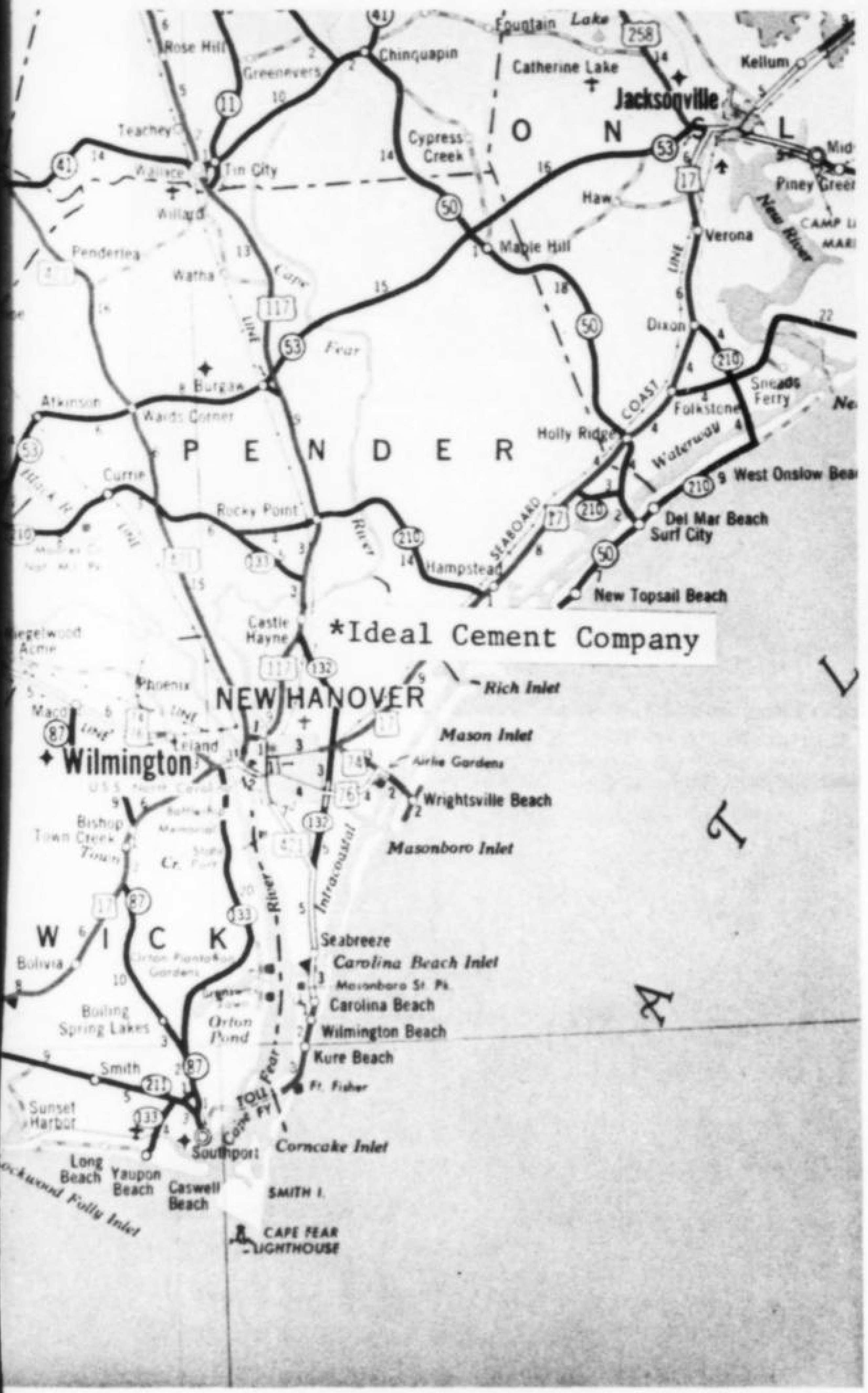

***Fig. 1.* Road map of Castle Hayne area showing the location of Ideal Cement Company.**

INTRODUCTION

Blue nodules of vivianite were first found in the Fall of 1971 by Richard Dayvault from the tailings at the Ideal Cement Company's quarry, near Castle Hayne, New Hanover County, North Carolina (Fig. 1). In the spring of 1973, the writer visited the site and found abundant white and blue vivianite nodules along the east wall of the quarry. The specimens from this locality are similar to those reported from Kansas (Tien, Waugh and Dilts, 1969). Vivianite crystals have been reported in North Carolina from a quarry of the Foote Mineral Company, Kings Mountain, Cleveland County, in association with lithium-rich pegmatite (Kesler, 1961; Leavens and White, 1967). To the writer's knowledge, this is the first reported occurrence of vivianite nodules from the coastal plain of North Carolina.

OCCURRENCE

Vivianite is concentrated in the lower part of a 10-foot thick, massive clay unit between the Castle Hayne limestone below and an overlying dark gray shale unit. The mineral occurs as irregular-shaped earthy nodules ranging in size from 1 mm to 2 cm. On the surface of the wall, the nodules are blue. White nodules (Fig. 2) can be found only under the surface of the outcrop; sometimes just a few centimeters below the inclined surface. The massive clay that is known locally as "blue clay" is brownish to greenish gray on the surface and bluish gray under the surface of the outcrop. The major mineral constituents of the "blue clay" are smectite and quartz. The Castle Hayne limestone is considered as Eocene age (Clark, *et al.*, 1912; Richards, 1950; Brown, 1958). The "blue clay" is probably part of the Yorktown formation of Miocene age (Clark, *et al.*, 1912; Brown, 1958; LeGrand, 1960).

Nodules of vivianite found in the tailings differ from those in the "blue clay". There are two types of nodules found in the tailings. One type is an earthy variety with a blue core and various shades of greenish and yellowish brown coatings (Fig. 3). Another type of nodule contains tiny radiating crystals with irregular protuberances over the surface (Fig. 4).

COLOR CHANGE AND CHEMICAL FORMULA

Specimens of bluish gray clay with white vivianite nodules were brought back to the laboratory for examination. The white nodules on the surface of the clay gradually changed their color to blue within 24 hours (Fig. 5), whereas those inside of the clay were unchanged. A small piece of clay with several white nodules was put in a vacuum desiccator. No color change of the white material in the vacuum was observed within weeks.

Fig. 2.

Fig. 3.

Fig. 4.

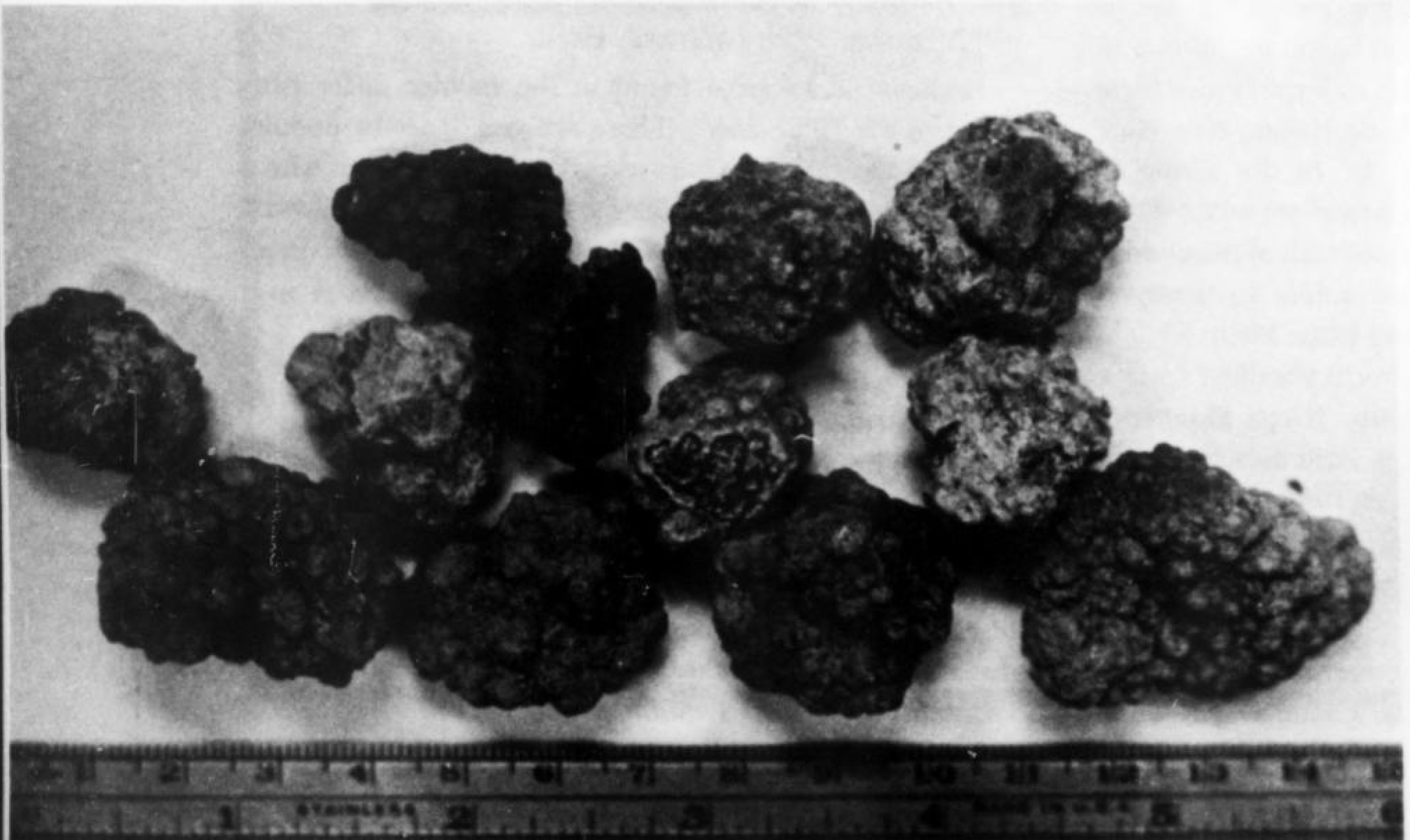

***Fig. 2.* White vivianite nodules in "blue clay" on the wall of the quarry. *Fig. 3.* Earthy vivianite nodules found in the tailings. *Fig. 4.* Vivianite nodules of tiny radiated crystals showing the irregular protuberances over the surface.**

The color change of vivianite from white or colorless to green or blue is caused by the partial oxidation of the ferrous iron upon the exposure of air (Watson, 1918). Hush (1967) has explained the intense blue color resulting from the partial oxidation of vivianite in terms of Fe(II) - Fe(III) intervalence transfer absorption. The bright colors of the mineral have also been used as one of the examples by Day (1970) as the result of mixed valency. The intensity of mixed valence color varies with the proportion of the valency states. Therefore, the traditional formula, $Fe_3(PO_4)_2 \bullet 8H_2O$, is only for the unoxidized white or colorless material. The presence of various amounts of ferric iron in the colored varieties has been considered in the literature. Different names have been given for oxidized vivianite by Russian mineralogists (Chukhrov and Ermilova, 1956; Chukhrov and Rudnitskaya, 1966; Teodorovich, 1961). However, the Russian usage has not been commonly accepted in English literature, although a few Russian names have appeared in the New Mineral Lists of the *Mineralogical Magazine* and *Dana's System of Mineralogy* (Palache, Berman and Frondel, 1951). Previous studies by thermal and infrared spectral analyses indicated that vivianite shows different colors of blue, green and brown, and contains various amounts of hydroxyl ion in its crystal structure in the different stages of oxidation. A formula, $Fe^{2+}_{3-x}Fe^{3+}_{x}(PO_4)_2 \bullet (8-x)H_2O \bullet x(OH)$, simplified from $Fe^{2+}_{6-x}Fe^{3}_{x}(PO_4)_4 \bullet (16-x)H_2O \bullet x(OH)$, originally proposed by Gamidov and Mamedov (1960) has been suggested for vivianite and its derivates (Tien and Waugh, 1969). The traditional formula should be used exclusively for unoxidized white or colorless material, which is not stable under normal conditions.

ACKNOWLEDGEMENTS

I would like to express my special thanks to Mr. Al Simon, Director of Public Relations, Ideal Cement Company, Castle Hayne, North Carolina, for his permission in visiting the quarry.

REFERENCES

Brown, P. M. (1958). Well logs from the Coastal Plain of North Carolina, *North Carolina Dept. Cons. and Devel., Div. of Mineral Res. Bull.* **72.**

Chukhrov, F. V., and L. P. Ermilova (1956). New data on kerchenites, *Problem of Geochem. and Min., Acad. Sci. USSR,* 158-175.

Chukhrov, F. V., and E. S. Rudnitskaya (1966). Nature of kerchenite, *IZV. Ickad. Nauk. SSSR, Ser. Geol.,* **31,** 51-56.

Clark, W. B., B. L. Miller, L. W. Stephenson, B. L. Johnson, and H. N. Parker (1912). The Coastal Plain of North Carolina, *North Carolina Geol. and Econ. Survey,* **III,** pt. 1.

Day, P. (1970). Mixed-valency compounds, *Endeavour,* **29,** 45-49.

Gamidov, R. S., and Kh. S. Mamedov (1960). The structure of vivianite and its derivates, *Azerbaidzhan. Khim. Zhur.,* **4,** 121-125 (in Russian).

Hush, N. S. (1967). Intervalence-transfer absorption, *Prog. Inorg. Chem.,* **8,** 401-405.

Kesler, T. L. (1961). Exploration of the Kings Mountain pegmatites, *Min. Eng.,* **13,** 1062-1068.

Leavens, P. B., and J. S. White, Jr. (1967). Switzerite, $(Mn,Fe)_3(PO_4)_2 \bullet 4H_2O$, a new mineral, *Amer. Mineral.,* **52,** 1595-1602.

LeGrand, H. E. (1960). Geology and ground water resources of Wilmington-New Bern area, *North Carolina Dept. Water Res. Ground-Water Bull.* **1.**

Palache, C., H. Berman, and C. Frondel (1951). *Dana's System of Mineralogy, Vol. II,* John Wiley and Sons, New York.

Richards, H. G. (1950). Geology of the Coastal Plain of North Carolina, *Amer. Philos. Soc. Trans., new Ser.,* **40,** pt. 1.

***Fig. 5.* A hand specimen of "blue clay" with nodules of blue vivianite.**

Teodorovich, G. I. (1961). *Authigenic Minerals in Sedimentary Rocks* (English Translation from Russian), Consultants Bureau, New York.

Tien, Pei-lin, and T. C. Waugh (1969). Thermal and x-ray studies on earthy vivianite in Graneros shale (Upper Cretaceous), Kansas, *Amer. Mineral.*, **54**, 1355-1362.

Tien, Pei-lin, T. C. Waugh, and R. L. Dilts (1969). Vivianite in Graneros shale (Upper Cretaceous), Central Kansas, *Kansas Geol. Survey Bull.* **194**, pt. 1, 21-24.

Watson, T. L. (1918). The color change in vivianite and its effect on the optical properties, *Amer. Mineral.*, **3**, 159-161.

FINE MINERALS AND GEMSTONES
Direct from Brazil

OCEANSIDE GEM IMPORTS, INC.
426 Marion St.
P.O. Box 22
Oceanside, N.Y. 11572

Phone (516) 678-3477
Hours by Appointment

W.D.CHRISTIANSON MINERALS
200 Napier St.,
Barrie, Ontario, Canada
MICROMOUNTS
Latrappite, Dresserite,
Dawsonite, Weloganite, Ekanite
2" synthetic Bismuth crystal
clusters

MICROMOUNTS

We deal in micromount material only and offer high quality specimens, both mounted and unmounted.

Lists on request.
Postage appreciated.

HATFIELD GOUDEY
1145 West 31st Avenue
San Mateo, California 94403

CRYSTALS OF INDIA

Choice mineral specimens personally collected and acquired in India,

Rustam Z. Kothavala
377 A. Walden St.
Cambridge, Massachusetts
02138

Hours by Appointment:
(617)-492-1352
Any day 9 A.M. to 9 P.M.

Inquiries and visits invited

Pala Properties International, Inc.

Edward Swoboda — Bill and Karla Larson — Elvis "Buzz" Gray — Pete Bancroft

Importers of fine mineral specimens from world-wide localities
Wholesale — Retail

Open Wed. thru Sunday
11:30 until 5 P.M.
or call for appointment

Tourmaline
Tourmaline Queen Mine
Pala, California

NEW ACQUISITIONS:

AZURITE - Mibladen, Morocco
MORGANITE - Pala, Calif.
Old Classics from Europe
Plus a new collection from Bolivia

Please call us or visit our showroom, "The Collector," to view and ask questions concerning our large selection of mineral specimens for collectors.

912 So. Live Oak Park Rd.
Fallbrook, Calif. 92028
Phone (714) 728-9121

AN AMERICAN MINERALOGIST PART IV

by Arthur Montgomery
Lafayette College, Easton, Pennsylvania 18042

Descriptive papers on minerals collected in Greenland

A twenty-page paper in the Academy *Proceedings* of 1924, (Vol. 76, p. 249-268) treated the descriptive mineralogy and geologic occurrence of the species collected by Gordon on his Greenland expedition. It was chiefly on the minerals from Narsarsuk. As most of these species had been collected in the same area before and described in Danish mineralogical publications, elaborate crystallographic and other data did not need to be determined and presented in the paper, for the most part. What lifts this report above others of its kind, however, by mineralogists then or now, is the thorough history of mineral collecting and geological field work done in the areas visited and the author's detailed observations on individual crystal-pocket occurrences. These data made it possible for the author to clarify the geological associations and origin of all the species collected in terms of their paragenetic (mineral-sequence) relationships. Gordon's continuing concern for interpretation of the field occurrences of minerals, as deduced from their geological surroundings as well as small-scale interrelationships, is clear-cut in this exemplary contribution to descriptive mineralogy.

Nearly fifty species were collected, described in this paper, and fitted into an over-all paragenetic scheme of occurrence. One of the minerals, ancylite, on which the author would do specialized crystallographic research, was to be treated at greater length in a subsequent paper. Gordon's lengthy report is reprinted here in full; it is doubtful whether more than a few of those interested in descriptive mineralogy, in Gordon's time or today, have had the chance to read it.

"Minerals obtained in Greenland on the second
Academy-Vaux expedition, 1923

An account of this expedition appeared in the YEAR BOOK of the Academy for 1923, the present paper being descriptive of the minerals found. As the principal finds were made at Narsarsuk, the minerals from the other localities will be mentioned only incidentally.

The first systematic mineralogical exploration of western Greenland was undertaken by Karl Ludwig Giesecke (Mineralogisches Reisejournal uber Gronland, 1806-13. In: Medd. om Grønland, XXXV, 1910), an Austrian, from 1806 to 1813. He visited most of the fiords from Upernivik to Cape Farewell, and made a short excursion up the east coast. Many of his specimens were shipped in casks to Europe. As it was during the Napoleonic wars, the ship was captured by a French privateer, and this in turn by an English frigate. The prize was taken to Leith, Scotland. After the casks had lain in storage for some time they fell into the hands of R. Allan, the Scotch mineralogist. The specimens were distributed for description, and the following minerals, then new, were announced: allanite, arfvedsonite, eudialyte, and sodalite.

Giesecke discovered the cryolite locality at Ivigtut. This mineral had been known before only as small specimens in collections of Eskimo materials brought back to Europe by missionaries. In 1854, J. W. Taylor worked the tin and argentiferous-galena vein at Ivigtut, which afforded many specimens of cassiterite, wolframite, allanite, and columbite. Since then the deposit has been worked for cryolite, with the discovery of the following additional minerals: pachnolite, thomsenolite, ralstonite, chiolite, and cryolithionite.

Collections of Greenland minerals were made by H. Rink (Danish Greenland, London, 1877), while he lived in Greenland, during the years 1848-51 and 1853-56.

In 1874, K. J. V. Steenstrup made the first of a series of Greenland expeditions, visiting in that year the native iron locality at Disko Island, Ivigtut, and Kangerdluarsuk. The seasons of 1876, 1877, 1888, and 1899 were spent chiefly at Ivigtut, and the Kangerdluarsuk Omraadet, comprising the area about the Tunugdliarfik and Kangerdluarsuk fiords. Many tons of eudialyte were obtained in 1888. Some of the minerals then collected, including steenstrupine, ilvaite and polylithionite, were described by J. Lorenzen in 1882 and 1893 (Min. Mag. V, 49, 1882: Medd. om Grönland, VII, 1-46, 1893) who died while on the way to Greenland.

In 1888, Steenstrup discovered the great locality of Narsarsuk. The Greenlanders had been attracted by the fine crystals of aegirite which they had found lying on the surface, and took Steenstrup to the locality. At this time Carl E. O. Lytzen (1839-1896) was Kolonibestyrer at Julianehaab (from 1880 to 1893), and he encouraged the Greenlanders at Igaliko to collect for him. The Lytzen collection was described by Flink (Geol. Fören. Förhandl. XV, 195, 467, 1893), Lindstrom (Geol. Fören. Förhandl, XVI, 330, 1894), and Nordenskiold (Geol. Fören. Förhandl, XVI, 336, 1894). The following minerals, then new, were announced: neptunite, epididymite, and elpidite. In addition were catapleiite, and parisite, then known only from Norway and Colombia, respectively.

In 1897, Gustav Flink visited Ivigtut, Kangerdluarsuk, Narsarsuk, and the Tunugdliarfik (Medd. om Grønland, XIV, 221, 1898: XXIV, 1899). In the small area of Narsarsuk about 40 minerals were found, including the following new ones: whalcolamprite, cordylite, endeiolite, leucosphenite, lorenzenite, narsarsukite, spodiophyllite, and taeniolite. Four new minerals, epistolite, britholite, schizolite, and steenstrupine, collected by Flink on the Tunugliarfik. were described by Bφggild and Winther (Medd. om Grφnland, XXIV, 181-213, 1899; XXV, 43, 1902; XXVI, 91, 1904; LI, 435, 1915).

In 1900, N. V. Ussing and O. B. Bφggild made a geologic study of the Julianehaab district, in which the two nepheline-syenitic batholiths, and their unusual rocks were studied in detail (Medd. om Grφnland, XXXVIII, 1912; see also XIV, 1898).

In 1903 and 1904, A. Bernburg, a merchant of Copenhagen, sent two expeditions to Narsarsuk. Although nothing new was discovered, fine catapleiite and astrophyllite were obtained (Medd. om Grφnland, XXXIII, 95, 1907). Two more new species have since been described by Bφggild: ussingite from Kangerdluarsuk (Medd. om Grφnland, LI, 105, 427, 1913 and 1915), and leifite, found by the Greenlanders of Igaliko, at Narsarsuk.

Finally the *Mineralogia Groenlandica* (Medd. om Grφnland, XXXII, 1905) appeared in 1905, in which all the minerals of Greenland were described in detail. The albites of Greenland, particularly the beautiful parallel growths of colorless crystals on microcline at Narsarsuk, were described in a monograph by Dreyer and Goldschmidt (Medd. om Grφnland, XXXIV, 1, 1910).

Narsarsuk

The famous mineral locality, Narsarsuk, is situated in the Julianehaab district, about 8 kilometers north of Igaliko, a village of about 70 inhabitants. Narsarsuk is a plateau with an elevation of nearly 300 meters, overlooking the junction of the Korok and Tunugdliarfik fiords. The geology has been described in detail by Ussing (Medd. om Grφnland, 38, 226, 1912). North of Igaliko is a great batholithic mass of nepheline-syenite, intrusive in Precambrian granite and a red sandstone of Devonian (?) age. Along the western sandstone border of the batholith is a zone of augite-syenite, about a kilometer in width. The mineral locality is situated well within the augite-syenite.

The augite-syenite is dark gray when fresh, but is usually light gray, brownish gray, or even reddish gray. It is coarse-grained, and composed chiefly of soda-orthoclase, with augite, and some hornblende, biotite, iron-ore, apatite, olivine, nepheline, and rarely aenigmatite, titanite, and zircon.

In the augite-syenite are pegmatite veins of large feldspar crystals, coarse aegirite, and sometimes arfvedsonite and eudialyte. The minerals, however, for which Narsarsuk is so well known, occur in small irregular pegmatitic segregations or pockets, usually of the nature of vugs, which are not associated apparently with the larger pegmatite veins, but which seem to occur in the augite-syenite at a somewhat higher horizon, at and just below the surface of the plateau. In some cases the pockets are practically filled, while in others there are cavities.

The origin of the pegmatite pockets appears to be as follows. As the augite-syenite magma crystallized out into augite, soda-feldspar, etc., the remaining liquid became richer in H_2O, CO_2, F, S, and Ca, Sr, Ba, Zn, Pb, Zr, and the rare earth elements, Ce, etc. At the final stage of the crystallization of the augite-syenite, the remaining liquid became concentrated into small pools near the upper margin of the augite-syenite, and crystallized out, forming the mineral pockets.

Actually, the phenomenon was not as simple as this. The origin of the pegmatite pockets is closely connected with the origin of the augite-syenite and the relation of the latter to the bordering sandstone. There may have been Some assimilation of the sandstone, which affected the chemical equilibrium of the magma, the composition of the resulting rock, and the formation of the pegmatites, particularly by increase of SiO_2.

As was noted above, the locality was first visited by Steenstrup, led there by Greenlanders who had been attracted by the aegirite crystals lying on the surface. Practically all the material gathered heretofore has been surface specimens representing the weathering of pockets situated at the surface. A few minor excavations had been made at various places (A communication received by the writer from Dr. Flink, dated March 6, 1924, said regarding the Narsarsuk minerals: "I did not need to dig to find them; in most cases they were lying on the surface. Already before my visit (in 1897), however, many had been picked by the Greenlanders. During the first weeks I camped at Igaliko, later at Kasortalik, and visited from these places daily Narsarsuk."), apparently by the Bernburg expeditions (1903 and 1904). Regarding these expeditions Bφggild stated (Medd. om Grφnland, XXXIII, 97, 1905) it seemed that almost the whole collection had been obtained from a pegmatitic mass, not known before. The number of pieces gathered, with the exception of catapleiite and astrophyllite were very small. and included feldspars, calcite, parisite, cordylite, epididymite, and neptunite; aegirite, quartz, and rhodochrosite were found in rather insignificant specimens.

When the writer visited Narsarsuk, he found that the surface had been pretty thoroughly cleaned of mineral specimens by the previous expeditions. With the aid of a number of Greenlanders from Igaliko, a series of holes and trenches were dug at various places, particularly near Flink's localities 2, 3, 4, and 5. The extent of the excavations and their situation is shown in the upper figure, Plate XI. About 60 holes were dug, most of them probably a meter deep (one was carried to 2 meters) exposing about 16 mineral pockets.

As each pocket was opened up it was noted by a letter, and all specimens were similarly lettered, with the idea of retaining a paragenetic record of the minerals produced by each pocket. These data are given in Table I. It will suffice, therefore, to give a description of the most interesting and productive of the pockets. This will be followed by an annotated list of all the minerals found and detailed descriptions of several new finds. All the minerals previously found at Narsarsuk were obtained excepting the following: leifite, leucosphenite, lorenzenite, and spodiophyllite. Only a few specimens, usually not *in situ*, were found of the following: chalcolamprite, endeiolite, eudidymite, microlite, narsarsukite, and taeniolite. The rest were obtained in quantity, as fine, quite fresh, well-crystallized material.

Minerals of the Pegmatite Pockets

B Pocket — The B pocket consisted almost entirely of arfvedsonite and crocidolite, with some white microcline crystals on the walls, and a minor amount of later zircon, fluorite, and altered siderite. The arfvedsonite crystallized out in coarse interlocking crystals without distinct faces. The crocidolite is in parallel position with the arfvedsonite, and appears to have been derived from this mineral, a process involving oxidation of the ferrous iron of the arfvedsonite, and perhaps a slight hydration. At first sight it appeared as though the crocidolite had been formed by shearing of arfvedsonite, but there was no positive evidence of this.

D. Pocket — The D pocket was opened up at a depth of a few dcm. below the surface, and it measured about 4 dcm. in its greatest dimension. Yet it produced no less than 24 species, containing about one-third of the known elements! A photograph of this remarkable pocket is shown in lower figure of Plate XI. A complete list of the minerals is given in Table I.

The walls of the pocket were lined with gray orthoclase. On this were dark-green aegirite crystals measuring up to 4 x 4 x 15 cm. Several generations of aegirite crystals were noted; first, the large early dark-green crystals; secondly, smaller green crystals growing on the sides of the larger ones, and projecting at a slight angle from them; and finally felt-like aggregates of minute olive-brown crystals, on the older aegirite, orthoclase, zinnwaldite, and zircon. Following the deposition of the early aegitite, was the formation of 2 mm. brown zircon in bipyramidal crystals, grayish micaceous crystals of zinnwaldite, and secondary orthoclase in small colorless crystals, in the order named. The third generation of aegirite was formed at this point. This was followed by fluorite in greenish, bluish, or purplish-tinted dodecahedra up to 5 cm. in diameter. At about the close of the deposition of the fluorite, epididymite began to form, in aggregates of twinned, white, acicular crystals resembling cerussite (Plate XII, fig. 5). This was followed by some small albite crystals, and some catapleiite (type 4). Then came the deposition of the carbonates: calcite, parisite, cordylite, and ancylite, in the order named. The calcite occurred in 2 cm. rhombohedra or prismatic crystals (with a basal pinacoid termination). The cordylite is in the form of yellowish hexagonal crystals with a perfect basal cleavage showing a white color and pearly luster. Implanted upon the cordylite, and to some extent upon the parisite, were many rounded colorless, yellowish, or reddish-tinted crystals of ancylite. Either preceding, or following, the deposition of the carbonates was the formation of masses of small colorless apatite crystals, enclosing small crystals of brown microlite. Lastly, natrolite was deposited in aggregates of small prismatic crystals, and these were superficially altered to mesolite, which forms a white, cryptocrystalline sheathing about each natrolite crystal.

At some undetermined stage, galena and sphalerite were deposited, apparently to some extent replacing aegirite, but as they were not in contact with the other minerals of the pocket, their paragenetic relations could not be determined. The sphalerite occurred as a 4 cm. mass between rough crystals of aegirite; while the galena masses measured up to 2 x 2 x 2.5 cm. Slight amounts of calamine were found associated with the sphalerite, while films of cerussite occurred on the cleavage planes of the galena.

Not an inconsiderable amount of a brown chloritic substance was found in the pocket, usually on the aegirite.

In general, the following order of formation of the minerals obtained:

1. Orthoclase of wall.
2. Large aegirite crystals.
3. Zircon, zinnwaldite, orthoclase.
4. Completion of deposition of aegirite.
5. Fluorite.
6. Epididymite, albite, catapleiite, and perhaps elpidite.
7. Microlite and apatite (may have followed 8).
8. Carbonates: calcite, parisite, cordylite, ancylite.
9. Galena and sphalerite (may have preceded 8).
10. Zeolites: natrolite, and mesolite.

There was, of course, considerable overlapping of the period of deposition of these minerals, while there may have been much resorption of earlier minerals formed.

E Pocket — This pocket was very small, perhaps 10 cm. in greatest dimension. It contained the only large crystal of catapleiite found, an individual measuring 3 cm. in diameter, and 1 cm. in thickness. The walls of the vug were formed of microcline with albite in parallel position. Upon the albite was this large crystal of catapleiite, and many smaller ones, less than 5 mm. in diameter.

TABLE I

Narsarsuk Mineral Assemblages

	A	B	C	D	E	F	G	H	I	J	K	L	M	N	O	P	Q	R	Surface
Aegirite	x		x	X	x	x	X			X	X	X					x	X	x
Albite				x	x		x		x		x	X						X	x
Analcite															X				
Ancylite	x			X					X										
Arfvedsonite																x			
Apatite				X														X	
Astrophyllite										?					X				
Biotite																			x
Calamine				x															
Calcite				x	x				x		x								
Catapleiite				x	x	X													
Cerussite				x															
Chalcolamprite																			x
Chlorite				x															
Cordylite				X					x										
Crocidolite		X																	x
Elpidite	x			x			x	x		X	X						x	X	x
Endeiolite				x															x
Epididymite	x			X		x	x				X	x					x		x
Eudidymite																			x
Eudialyte																x			x
Fluorite	x			X			x				x	x						x	
Galena				x															
Graphite									x			x						x	
Leifite																			
Leucosphenite																			
Lorenzenite																			
Microcline	x	x			x	x	x				x	X						X	x
Microlite				x															
Mesolite				x															
Magnetite																			x
Narsarsukite																			x
Natrolite	x			X									x	x	X	x			
Neptunite										x									x
Orthoclase				x															
Parisite	x		x	X	x	x	X		x			x		x				x	x
Quartz	x	x	x			x	x			x	x	x					x	x	x
Riebeckite	x						X												
Rhodochrosite																			
Sphalerite				x															
Spodiophyllite																			
Siderite																			
Kalithomsonite											X								
Taeniolite				x															x
Zinnwaldite				x															
Zircon				X								x							x

G Pocket — On the walls were rough Carlsbad-twins of microcline, with colorless albite crystals in parallel position up to 15 mm. Scattered over the surface of the feldspars were the following minerals (in about the order given): aegirite intergrowths with riebeckite, small green aegirite crystals, and a few small riebeckite crystals; tiny dodecahedra of fluorite (about 1 mm. in diameter); some fibrous yellow elpidite, twinned acicular crystals of epididymite, and small altered parisite crystals.

J Pocket — The J pocket was noteworthy because of the fine brilliant large crystals of aegirite (Plate XII, figs. 1, 3) it produced; and the large quantity of white acicular elpidite. The aegirite crystals projected out from orthoclase of the wall. The elpidite formed most of the cavity filling. A brownish mineral, perhaps astrophyllite, in fibrous or acicular crystals was not uncommon, having been formed later than the elpidite. A small amount of neptunite, in crystals up to 5 mm. in size, occurred in cavities, having formed later than the elpidite. Small albite and quartz (unetched) crystals were associated with it. Lastly, there was some calcite, and a few crystals of ancylite.

L Pocket — The L pocket was noteworthy for groups of beautiful Carlsbad-twin crystals of white microcline, with clear colorless albite in parallel position (Plate XII, fig. 7), and the fine brilliant crystals of aegirite it produced (Plate XII, fig. 4). The vug consisted largely of these three minerals, with a minor amount of graphite, zinnwaldite, fluorite, epididymite, and parisite.

O Pocket — The O pocket consisted exclusively of astrophyllite, analcite, and natrolite. The astrophyllite occurred as radiating acicular crystals shooting through massive white analcite, which occasionally showed some crystal faces. The natrolite occurred in white prismatic crystals up to 1.5 x 1.5 x 4 cm.

R Pocket — The R pocket produced a variety of minerals, notably Manebach-twins of microcline with colorless albite crystals in parallel position. In the immediate vicinity of the vug were minute cavities in the augite-syenite, seldom more than 1 or 2 mm. in diameter. These contained small balls of graphite, or transparent colorless albite crystals. The minerals of the pocket, in the order formed, were: microcline, Manebach-twins with clear colorless albite in parallel position; aegirite crystals up to 1 cm.; fluorite in small purplish-tinted dodecahedra; quartz (due to change of concentration of liquid, these later became etched and rounded, and dissolved off the walls, falling to the bottom of the cavity, which was filled with loose crystals); graphite, radial aggregates of minute platy crystals; elpidite, yellowish acicular crystal aggregates; epididymite, acicular white, twinned crystals; and finally apatite, in small white colorless crystals.

Two other pockets are described under Kalithomsonite and Catapleiite below.

Minerals found at Narsarsuk

Aegirite — A beautiful suite of brilliant and perfect aegirite crystals was obtained of varying form and surface markings. The largest measured 20 x 5 x 5 cm. Some of the crystals are shown in Plate XII. Figure 1 of this plate is a group of very brilliant crystals; figure 2 is a perfect crystal, the etched termination of which is covered with small perfect dodecahedra of fluorite; figure 3 is a large perfect crystal which was found imbedded in elpidite; and figure 4 is a brilliant crystal, with a multiple termination. In the D pocket (see above) three generations of aegirite crystals showed intergrowths or overgrowths of riebeckite.

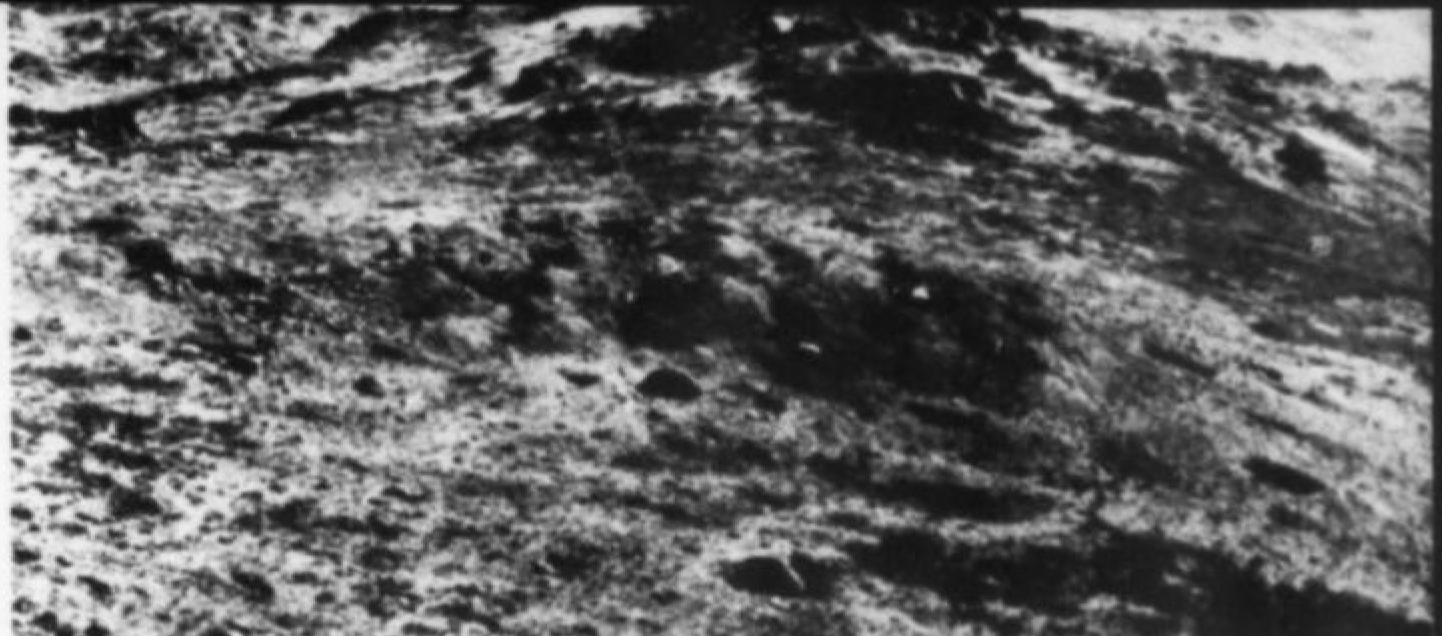

Fig. 1. **Site and extent of excavations at Narsarsuk. Gordon's photo and Plate X1 (top) from ANSP Proceedings, 76, 1924, follows p. 268.**

Fig. 2. **The "D pegmatite pocket." Gordon's photo and Plate X1 (bottom) from ANSP Proceedings, 76, 1924, follows p. 268.**

Albite — Beautiful specimens of clear, colorless crystals of albite in paralled position on white microcline were found in a number of pockets, notably in I, L, and R. In I, the albite was acicular in habit. In L, the underlying microcline was twinned according to the Carlsbad law, and in R, according to the Manebach law. A twin from the L pocket is shown on Plate XII, fig. 7.

Analcite — A small pocket (O) was found containing exclusive massive white analcite, natrolite, and astrophyllite.

Ancylite — Colorless, white, yellowish, or reddish-tinted, translucent crystals, measuring up to 1 mm. in diameter, were found abundantly in the D pocket, usually implanted on cordylite crystals, and associated with parisite, on calcite and aegirite. In the I pocket, white, yellowish and reddish-tinted crystals were found on albite.

Arfvedsonite — A single pocket consisting almost entirely of rough intergrown crystals of arfvedsonite and bluish-black fibrous crocidolite was opened up. This material will be described in more detail in a future paper. Specimens were also found, with eudialyte, about a slight excavation of a previous expedition, at Flink's locality 8.

Apatite — Masses of minute, colorless or white, prismatic crystals were abundant in the D pocket. Similar crystals

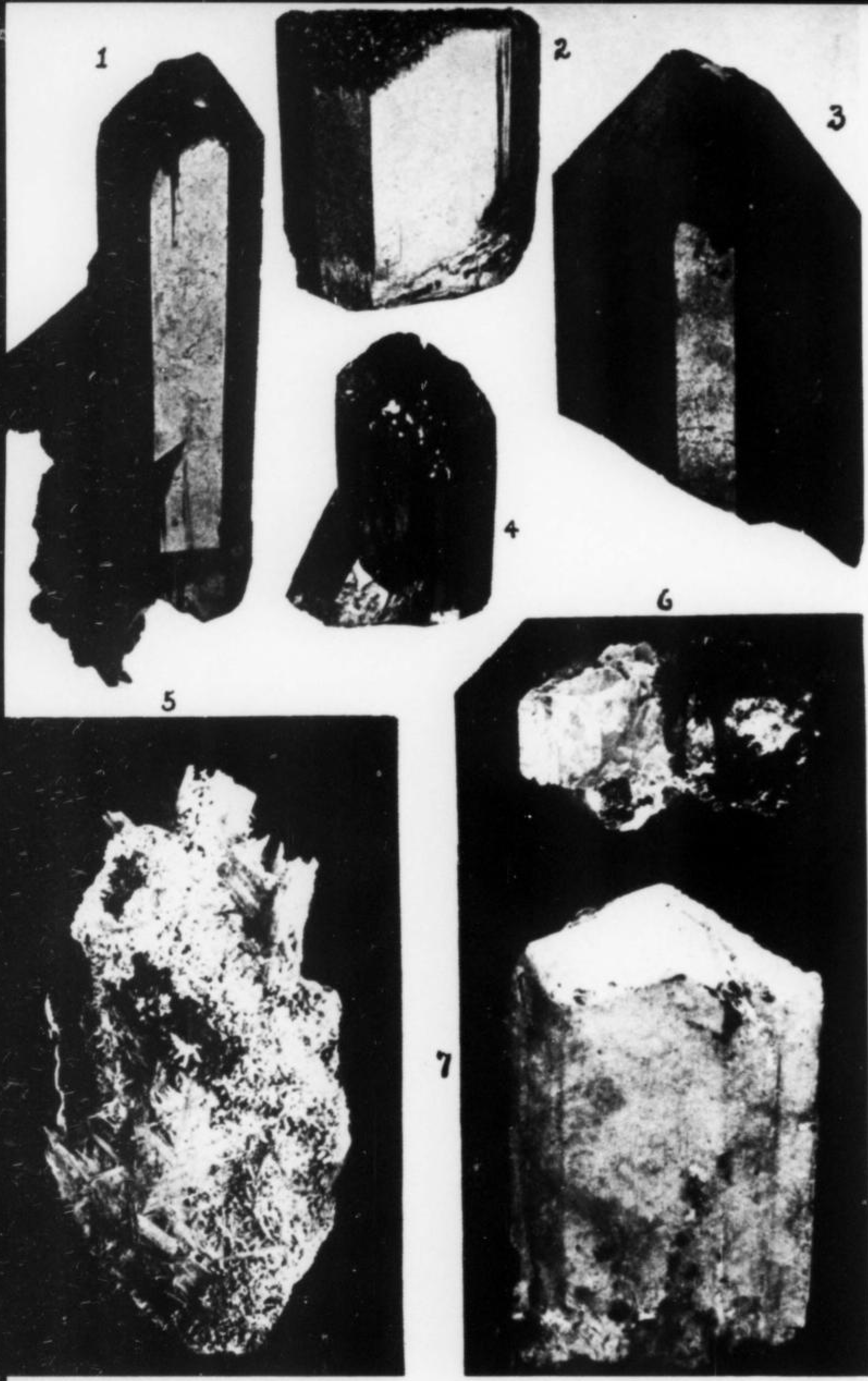

Fig. 3. **Pocket minerals from Narsarsuk: 1-4, aegirine; 5, epididymite and natrolite; 6, twinned crystals of epididymite; 7, Carlsbad-twin crystal of microcline, with albite in parallel position. All natural size. Gordon's photo and Plate X11 from ANSP Proceedings, 76, 1924, follows p. 268.**

up to 5 mm. in length occurred on albite in the R pocket.

Astrophyllite — Radiating aggregates of acicular crystals in analcite, with natrolite were found as the sole assemblage of pocket O.

Biotite — Some black crystals were found loose on the surface, and *in situ* in a pegmatite vein.

Calamine — White radiating fibrous aggregates were found on sphalerite in the D pocket.

Calcite — Brownish rhombohedra up to 2 cm., and aggregates of small prismatic crystals were found in the D pocket.

Catapleiite — Minute iridescent crystals of Bøggild's type 4 were found in the D pocket. Another small pocket yielded a crystal measuring 3 cm. in diameter, and 1 cm. in thickness, accompanied by many smaller crystals. An orthorhombic form is described in detail below.

α Catapleiite (Text-figure 1) — The catapleiite which has been heretofore described occurred in crystals of a distinct hexagonal habit. Optical examination, however, showed that the mineral had inverted to an orthorhombic form, being orthorhombic at ordinary temperatures, and hexagonal above 120°C to 200°C.

A few small crystals of catapleiite were noted on two specimens, undoubtedly from the same vug, which were distinctly orthorhombic in habit. These crystals, therefore, have probably crystallized below the inversion point. It is proposed to call the hexagonal higher temperature mineral β catapleiite, and the orthorhombic lower temperature form, α catapleiite.

Owing to the scarcity of the mineral, the entire investigation was made on a single crystal which was first measured on the goniometer, then suspended in a bromoform-

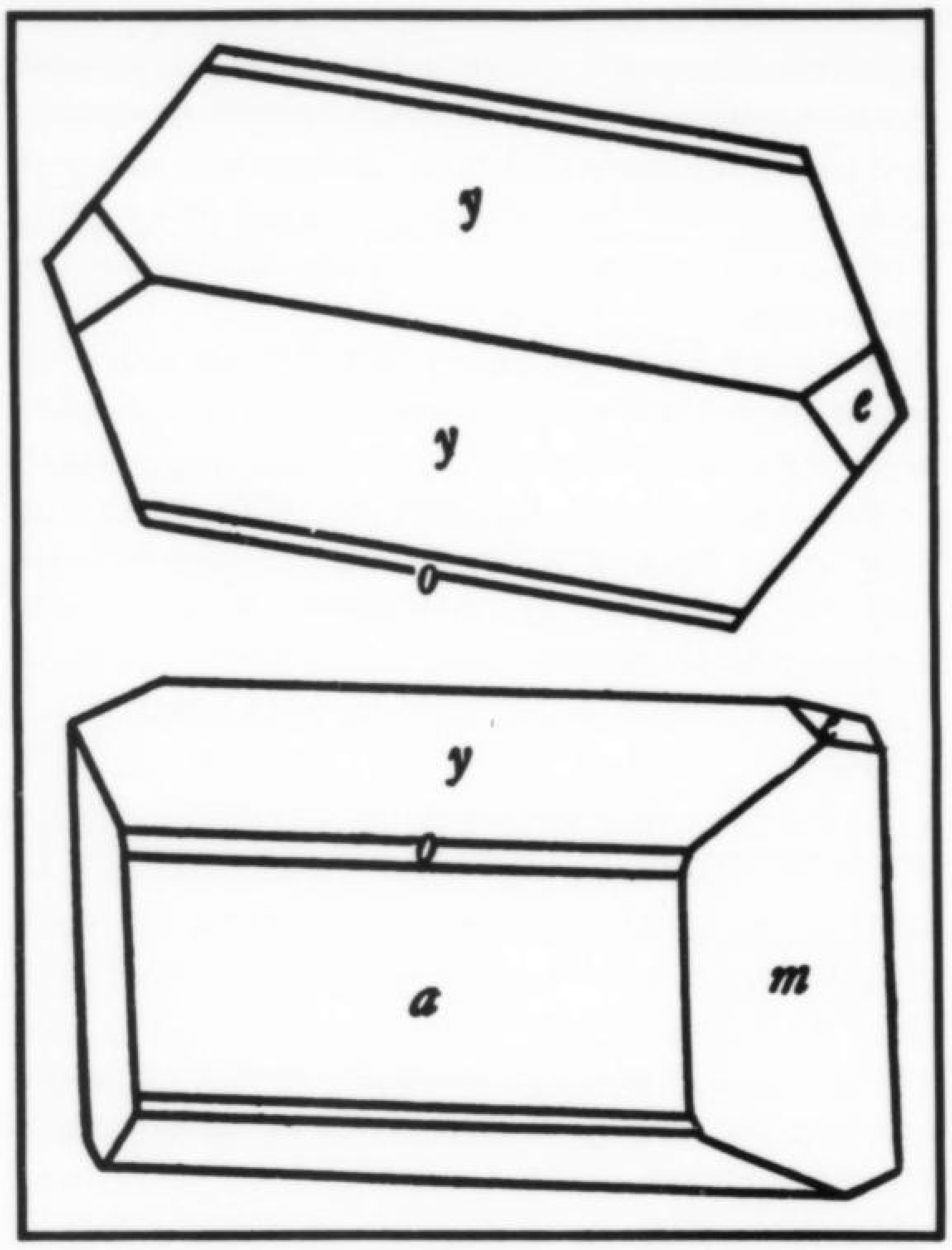

Fig. 4. **Gordon's "α catapleiite." From ANSP Proceedings, 76, 1924, p. 258.**

benzol mixture to determine the specific gravity, and finally crushed for the optical examination.

The α catapleiite is colorless to light buff, with a vitreous luster. It is quite translucent. The interior of the crystals have a somewhat checked appearance. The specific gravity is 2.658, which is abnormally low for catapleiite.

The crystal was set up on the goniometer, with the zone a (100), o (301), and y (203) parallel to the axis of the vertical circle. After measurement the angles were calculated for the accepted position.

TABLE II. α Catapleiite, Narsarsuk

a:b:c = 1.727:1:1.336
a:b:c = 1.727:1:1.336
1.732:1:1.341 (Flink)
$p_0 = 0.7736$; $q_0 = 1.336$

			Measured		Calculated	
Letter	Symbol	Faces Measured	φ °	ρ °	φ °	ρ °
a	(100)	4	90 00	00 00	90 00	00 00
m	(110)	2	30 4	90 00	30 4	90 00
y	(203)	3	90 00	27 17	90 00	27 17
o	(301)	1	90 00	65 50	90 00	66 41
e	(013)	2	00 00	25 31	00 00	24 00

Only 5 forms were found: a(100), m(110), y (203), o(301), and e(013)(?). Their relative development is shown in Text figure 1. The faces are all smooth and bright. The crystals are seldom more than 1 mm. in length, and usually occur in confused aggregates.

The optical properties differ markedly from those recorded for catapleiite; optically—, $c = \alpha$, $a = \beta$, $b = \gamma$, 2E large; $\alpha = 1.575$, $\beta = 1.590$, $\gamma = 1.605$; all ±.005.

The α catapleiite occurred in a small vug in augite-syenite. On part of the wall of the vug were several bright-green aegirite crystals measuring up to 3 x 3 x 5 mm. showing the forms a(100), m(110), c(001), u(111), and x(461). The rest of the wall was stained with a brownish iron mineral, representing the decomposition of a pre-existing carbonate, perhaps siderite, rhombs of which occur on one of the specimens. A few minute albite crystals were noted on one of the specimens. Upon these minerals lie the α catapleiite and groups of natrolite crystals, in part in radiating aggregates. The natrolite crystals are covered with a coat of a white secondary mineral, probably mesolite, the last mineral to form.

Chalcolamprite — A single specimen, showing crystals up to 3 mm. in diameter, was found on the surface.

Chlorite — A brownish chloritic substance was found coating aegirite in the D pocket.

Cordylite — Yellowish bipyramidal crystals, with a white color and pearly luster on the perfect basal cleavage, measuring up to 6 x 2 x 2 mm., were found in the D pocket, associated with ancylite and parisite, on calcite and aegirite. It was also found in the I pocket with acicular albite and green aegirite.

Crocidolite — Fibrous masses up to 5 cm. in length were found with arfvedsonite, as the principal minerals of one of the pockets.

Elpidite — Large white or yellowish, fibrous aggregates were found in a number of pockets. Elpidite occurred rarely as small distinct yellowish prismatic crystals.

Endeiolite — A single specimen of minute octahedra on a small crystal of aegirite was found on the surface. Another specimen, probably endeiolite, was found in the D pocket.

Epididymite — Aggregates of white twinned crystals, resembling cerussite, were found in the D pocket (Plate XII, fig. 5). The finest crystals were found with kalithomsonite; these were clear and colorless, and measured up to 2 x 2 x 1 cm. (Plate XII, fig. 6). Small acicular crystals are to be found among the surface material.

Eudialyte — Reddish cleavage masses were abundant with arfvedsonite at Flink's locality 8. In the vicinity of Flink's locality 6, a pegmatite vein containing rough crystals of eudialyte, in feldspar, was noted. Several specimens of pseudomorphous mixtures, largely elpidite after eudialyte, were found on the surface.

Eudidymite — A few fragments of eudidymite crystals were found on the surface.

Fluorite — Colorless, greenish, bluish, or purplish-tinted dodecahedra up to 5 cm. in diameter occurred on orthoclase and albite in the D pocket. These were frequently etched. In the L pocket fluorite occurred as greenish cubo-octahedra measuring 1 cm.; and in the R pocket as purplish-tinted cubo-octahedra.

Galena – Masses of galena, measuring up to 2 x 2 x 2.5 cm., were found in the D pocket, apparently having replaced aegirite. Films of cerussite occurred on the cleavage planes.

Graphite – Aggregates of minute platy crystals were abundant on albite (parallel growths on microcline) in the R pocket.

Kalithomsonite – In one of the pockets (K) a small quantity of thomsonite was found which is remarkable for its pink color, fluffy form, and high content of K_2O (about 6%).

The mineral is pale vinaceous-pink in color; probably due to the 0.85% MnO present. It occurred as a more or less incoherent mass of acicular crystals, rarely measuring more than 4 mm. in length, and 0.25 mm. in thickness, although usually much smaller. The needles showed a continuous series of reflections on the goniometer, so that it was not possible to obtain any crystallographic data on the material.

The kalithomsonite was found to be orthorhombic, with three cleavages: b(010) perfect; a(100) less perfect; c(001) imperfect. The mineral is optically positive; $\alpha = 1.535$; $\beta = 1.537$; $\gamma = 1.545$; X = b; Y = a; Z = c. It is therefore optically different from normal thomsonite in indices and orientation:

Thomsonite X = a, Y = c; Z = b; $\alpha = 1.535$; $\beta = 1.531$; $\gamma = 1.541$.

Kalithomsonite X = b, Y = a; Z = c; $\alpha = 1.535$; $\beta = 1.537$; $\gamma = 1.545$.

The kalithomsonite was found in pocket K, which was uncovered about half a meter below the surface in the vicinity of Flink's locality 4. This pocket produced the most striking specimens of epididymite; two large colorless, transparent crystals, measuring 2 x 2 x 1 centimeters (Plate XII, fig. 6).

The vug measured about 15 cm. in its greatest dimension, and was bounded by typical augite-syenite. A coarse aggregate of green aegirite and white orthoclase formed the floor of the vug, with a minor amount of zinnwaldite and graphite. Deposited upon this were quartz crystals measuring up to 1.5 cm., but showing all stages of etching and resolution. Some fluorite in minor amount had been deposited, but the paragenetic relations could not be determined. Upon and around the quartz, coarse buff crystals of elpidite were deposited. This was followed by the deposition of numerous perfect colorless twinned crystals of epididymite of the type figured by Flink (his Plate IV, figure 1), (Medd. om Grønland, XXIV, 1901) and small twinned albite crystals often of a pink color, measuring up to 1 cm. Much calcite, in aggregates of 1 mm. faintly yellowish crystals, combinations of c(0001) and m($10\bar{1}0$) was afterwards formed, followed by the precipitation of the kalithomsomite. The kalithomsonite occurred as an incoherent aggregate of more or less radiating fibers of pink color, tightly packed in, and completely filling the cavity of the vug. When removed, it was quite damp, and upon drying in the sun tended to fall apart. Although the rock surrounding this pocket was excavated for a distance of a meter all around it, no other pockets were uncovered. At a depth of 2 meters a coarse pegmatite of aegirite and feldspar was encountered.

In a recent paper (Antea, pp. 103-107), the writer presented the theory that the thomsonite group represented a series of mix crystals of $CaO.Al_2O_3.2SiO_2,3H_2O$ (calciothomsonite), and $(Na_2,K_2)O.Al_2O_3.3SiO_2.H_2O$ (natrolite with 1 H_2O), in which the latter compound could enter only up to 50%. Any intermediate mixtures would have the general formula:

$$\eta\{CaO + (Na_2,K_2)\ O\}.\ \eta Al_2O_3\, 2\eta + 1(SiO_2)\ .3\eta - 2(H_2O),$$

where η is the sum of the formula ratios of CaO and $(Na_2, K_2)O$, the latter being conveniently considered as 1. In Table II, the actual ratios and the theoretical ratios are compared in the last two columns; the agreement is close excepting in the case of the H_2O.

Magnetite – Rounded dodecahedra up to 2 cm. across were found on the surface, associated with traces of aegirite, apatite, fluorite, biotite, and quartz.

Mesolite – Fibrous coatings on natrolite and derived by alteration from that mineral, occurred in the D pocket.

Microcline – Large groups of beautiful white crystals, twinned according to the Carlsbad and Manebach laws, and covered with albite in parallel position were found in the L and R pockets. A microcline crystal twinned according to the Carlsbad law, with albite in parallel position, is shown on Plate XII, fig. 7.

Microlite – A single specimen of small (1 mm.) brownish octahedra, imbedded in apatite, was found in the D pocket, associated with galena, fluorite, and parisite.

Natrolite – Aggregates of small prismatic crystals, coated with an alteration zone of mesolite, occurred in the D pocket. Crystals measuring up to 14 x 1.5 x 1.5 cm. were found in the O pocket with analcite and astrophyllite. Fibrous radiations of natrolite formed an alteration product of feldspar in a pegmatite vein near Flink's locality 6.

Narsarsukite – A few specimens of narsarsukite were obtained about an excavation made by a previous expedition near Flink's locality 14.

Neptunite – A few small neptunite crystals were found on the surface. Neptunite was found *in situ* only in the J pocket, as small brilliant black crystals with elpidite.

Parisite – Aggregates of translucent, orange-colored, steep, rhombohedral crystals, measuring up to 3 mm. long, occurred in abundance in the D pocket, on calcite and aegirite. Altered crystals up to 3 x 2 mm. were found in the G pocket, while perfectly transparent orange-colored crystals were found in the A pocket. A single mass of crystals, 3 x 2 x 1 cm., was found on the surface. The largest individual noted measured 6 x 4 x 3 mm.

TABLE III. Kalithomsonite, Narsarsuk

Analysis by Dr. J. E. Whitfield

Analysis		Recalculated	Ratios		Theory
SiO_2	38.09	40.80	.6766	.6766 5	5
Al_2O_3	26.61	28.51	.2789	.2789 2	2
Fe_2O_3	Trace				
MnO	0.79	0.85	.0120		
CaO	5.72	6.13	.1093	.1444 1	1
MgO	0.87	0.93	.0231		
Na_2O	3.62	3.88	.0626	.1268 1	
K_2O	5.65	6.05	.0642		1
H_2O above 100°C	12.00	12.85	.7133	.7133 5	4
H_2O at 100°C	6.40				
	99.75	100.00			

Quartz — Simple, transparent crystals, measuring up to 5 cm. long, and 1 cm. in diameter, were found in the R pocket. These showed various degrees of solution, from slightly etched to completely rounded individuals. Unetched crystals up to 4 x 2 cm., clear and colorless, were found in the J pocket. Several crystals, the largest 9x8x5 cm., were found on the surface, all the faces showing beautiful etch figures.

Riebeckite — Riebeckite formed overgrowths, or intergrowths with aegirite in the G pocket. (See also under crocidolite above.)

Sphalerite — Resinous masses up to 4 cm. in diameter occurred between large crystals of aegirite in the D pocket, having apparently to some extent replaced the aegirite.

Taeniolite — A single specimen with a few tiny crystals was found on the surface, and another one *in situ* in the D pocket.

Thomsonite — See Kalithomsonite.

Zinnwaldite — A grayish micaceous mineral, in small crystals, was found in the D pocket, which probably represents this species.

Zircon — Zircon is not an uncommon mineral at Narsarsuk, being found occasionally as brown, prismatic crystals up to 2 cm. in diameter in the syenite. Loose crystals, and masses up to 6 x 3 x 3 cm., were found on the surface. Bipyramidal crystals, measuring up to 5 mm. in diameter, were abundant in the D pocket, varying in color from brown to red, or even colorless in the smallest crystals.

Kangerdluarsuk and Tunugdliarfik Minerals

Kangerdluarsuk is well known to mineralogist as the type locality for arfvedsonite, sodalite, and eudialyte. While it is properly the name of the fiord, it has been extended as a mineral locality name to cover the whole of the Ilimausak batholith, the geology of which has been described in detail by Ussing (Medd. om Grφnland, XXXVIII, 35, 1912).

The Ilimausak batholith is a large intrusive mass of nepheline-syenites, cutting Precambrian granite and Devonian (?) red sandstones and interbedded lava flows and sills. The nepheline-syenite magma differentiated into a series of rare rocks, which form a stratified complex beautifully exposed along the fiords. On the north side of the Tunugdliarfik, this series comprises from the bottom upward: lujavrite, naujaite, sodalite-foyaite, pulaskite, quartz-syenite, and arfvedsonite-granite. A type of lujavrite, -kakortokite, occurs on the plateau of Kringlerne in the Kangerdluarsuk. Many pegmatites occur in these rocks, particularly in the naujaite. These produce the minerals for which the district is so well known.

The writer spent three weeks in the Kangerdluarsuk, and two weeks visiting the localities Tupersuatsiak, Naujakasik, South Siorasuit, Nunarsuatsiak, Igdlunguak, and Tugtup Agtakorfia on the Tunugdliarfik. Practically all the minerals reported from the district were found in excellent specimens with the exception of ussingite. These included the following: aegirite, arfvedsonite, aenigmatite, schizolite, nephelite, sodalite, polylithionite, eudialyte, steenstrupine, epistolite, natrolite, analcite, rinkite, neptunite, erikite, dahllite, apatite, and sphalerite. As the material obtained differed little from that which has already been described in detail by previous investigators, only the new finds will be noted here.

Analcitized Albite — A horizontal vein of analcitized albite, about 10 cm. in width, was found at Tugtup Agtakorfia. Tunugdliarfik, in the cliff formed by the lowest of naujaite masses in the lujavrite. The analcite forms large translucent cleavable masses of a pale greenish-yellow to red-yellow color. The microscope revealed minute needles of green aegirite all through it. Large unaltered masses of white to pink albite occur in the vein, and traces of sphalerite were noted. The analcite is perfectly isotropic, n = 1.487. It is readily decomposed by HNO_3 yielding gelatinous silica. This occurrence is remarkable, in that the analcite shows a very perfect cleavage.

Apatite — Apatite was found at the following localities: several small aggregates of translucent, brownish, hexagonal crystals with natrolite in a vein in lujavrite at Iglunguak, on the Tunugdliarfik; radiating greenish, pinkish, and reddish crystals with ilvaite near Niakornarsuk, on the Kangerdluarsuk; small bluish crystal aggregates with aegirite pseudomorphous after arfvedsonite on Nunarsuatsiak; and finally in pegmatite veins in naujaite at the head of the Kangerdluarsuk.

The apatite from the latter locality occurred as yellowish hexagonal crystals, up to 2 x 2 x 12 mm., which were at first mistaken for rinkite. They showed the forms: c (0001), x$(10\bar{1}1)$, a$(10\bar{1}0)$, and b$(11\bar{2}0)$; and the following optical properties; optically—, $\epsilon = 1.645$, $\omega = 1.648$. A microscopic examination of a crystal, kindly made by Mr. Frank J. Keeley, showed strong didymium absorption bands, indicating that the mineral was rich in the Ce group of rare earth elements. The specific gravity was 3.31.

Fluorite — Fluorite was found to be not uncommon in the pegmatites at the head of the Kangerdluarsuk. Strangely enough, this mineral has not hitherto been reported excepting from the sandstones of Nunasarnausak. It has, perhaps, been mistaken for analcite or sodalite.

The fluorite is quite colorless; and rarely is in distinct crystals. A specimen of arfvedsonite, however, showed a number of white dodecahedral crystals imbedded in it, measuring 7 mm. in diameter. Usually the fluorite occurs associated with sodalite, aegirite, and rinkite. The sodalite forms large greenish masses, the color being due to inclusions of minute aegirite crystals. Large distinct prismatic crystals of aegirite measuring several centimeters in length may occur in the sodalite. The fluorite forms rough masses, and sometimes rounded octahedral crystals, up to 5 centimeters across. A white zeolite, apparently natrolite, occurs in the cleavage cracks of the fluorite, giving the appearance of the alteration of the latter along these planes. The natrolite is a recently formed mineral and forms linings of solution cavities about the fluorite. In these cavities rinkite and schizolite crystals frequently are found.

Neptunite — A single specimen of neptunite was found at Igdlunguak, where it was at first mistaken for arfvedsonite. The crystal measures about 1 x 1 x 1/2 cm., is dull black in color with slight reddish reflections, and occurs imbedded in a fine-grained analcitized arfvedsonite-lujavrite.

Rinkite[1] — Lorenzen's (Medd. om Grønland, VII, 41, 1893) crystallographic data of rinkite are based on the measurement of three crystals on the Fühlehebelgoniometer, followed by measurements on the reflecting goniometer after cementing cover glasses on the crystal faces. A single boulder was found at Naujakasik on the Tunugdlairfik, which furnished several very brilliant little terminated crystals. These gave bright reflections, and have permitted the calculation of the axial ratios with greater accuracy than the original determinations.

TABLE IV. Rinkite, Naujakasik

a:b:c = 1.6614:1:0.6566; = 78°34

p = 0.3952; q — 0.6436; e — 0.1983

Letter	Symbol	Faces Measured	Measured		Calculated		Lorenzen	
			ϕ	ρ	ϕ	ρ	Leter	Symbol
			° ′	° ′	° ′	° ′		
a	(100)	5	89 59	90 00	90 00	90 00	r	(100)
h	(120)	2	17 4 ±13	90 00	17 4	90 00	h	(120)
M	(110)	11	31 49 ±26	90 00	31 33	90 00	M	(110)
s	(320)	12	42 35 ±21	90 00	42 39	90 00	s	(320)
*t	(210)	7	50 56 ±15	90 00	50 51	90 00		
*u	(310)	1	60 42	90 00	61 30	90 00		
*v	(410)	1	68 23	90 00	67 51	90 00		
c	(001)	3	90 6 ±24	11 25 ±24	90 00	11 26	n	(101)
*e	(401)	2	90 15 ±20	61 10 ±4	90 00	61 9		
m	$(\bar{1}01)$				−90 00	11 21	m	$(\bar{1}01)$
*f	$(\bar{2}01)$	1	−89 58	31 47	−90 00	31 8		
*g	$(\bar{4}01)$	1	−90 23	55 8	−90 00	54 40		
*k	(112)	1	48 56	27 28	50 54	27 30		
o	(121)	8	24 47 ±12	55 21 ±13	24 45	55 22	o	(341)
*p	(321)	1	47 1	62 43	46 25	62 18		
*l	$(\bar{1}21)$	4	−8 38 ±46	53 2 ±11	− 8 42	53 2		
*q	$(\bar{2}21)$	7	−24 41 ± 3	55 18 ±11	−24 42	55 20		

---

[1] Rinkite has been found by x-ray study to be identical with mosandrite, the latter name having priority.

The boulder was composed of arfvedsonite, aegirite, feldspar, nepheline, sodalite, natrolite, some eudialyte, with traces of spahlerite. The rinkite occurs as transparent, small (seldom more than 1 mm. long) crystals of a straw-yellow color, somewhat resembling golden beryl. There is a perfect cleavage parallel to a(100).

Seventeen forms were observed, including 10 new ones. The negative orthodome m (101) reported from Kangerdluarsuk was not found. The results of the measurements are given in Table IV, and the zonal relations of the forms are indicated on the gnomonic projection (Text-figure 2).

The crystals have a decided prismatic habit (Text-figure 3). The prisms' faces were bright and smooth. The new positive orthodome e(401) was observed twice as a large smooth face. The basal pinacoid c(001) is a prominently developed face, sometimes irregularly striated parallel to the edge c(001): e(401). The forms q($\bar{2}21$), l($\bar{1}21$), and o(121) are strongly striated parallel to the zone axis of this zone. These striations are probably due to polysynthetic twinning parallel to a(100). No other indications of twinning were noted, nor would they be expected considering the practical identity of the ρ angles of the forms c(001), and m($\bar{1}01$). This twinning also makes somewhat uncertain the designation of the terminal forms. The new pyramids k(112) and p(321) were each observed but once as two faces on the bottom of a doubly terminated crystal. The faces u(310) and v(410) were very narrow bright ones, although only observed but once. The new prism t(210) was a wide bright form observed on all three crystals.

In the calculation of the axial elements the following forms were used: M(110), s(320), t(210), c(001), o(121), l(121), and q(221); represented by 52 measured faces."

Detailed analytical data were given on two species in this paper whose later-established identities proved to be other than concluded by Gordon. Catapleiite is a rare zirconium silicate, found earlier in southern Norway and occurring also at Narsarsuk in the form of small plates of hexagonal outline. These crystals are complexly twinned and built up of thin lamellae of either orthorhombic or monoclinic symmetry. Gordon found catapleiite of the usual type, but he described in detail also tiny crystals which he took to be an orthorhombic low-temperature-inversion form of catapleiite. His crystallographic measurements were similar to those established for ordinary catapleiite, but the refractive indices and specific gravity proved very different. This led him to call the tiny orthor-

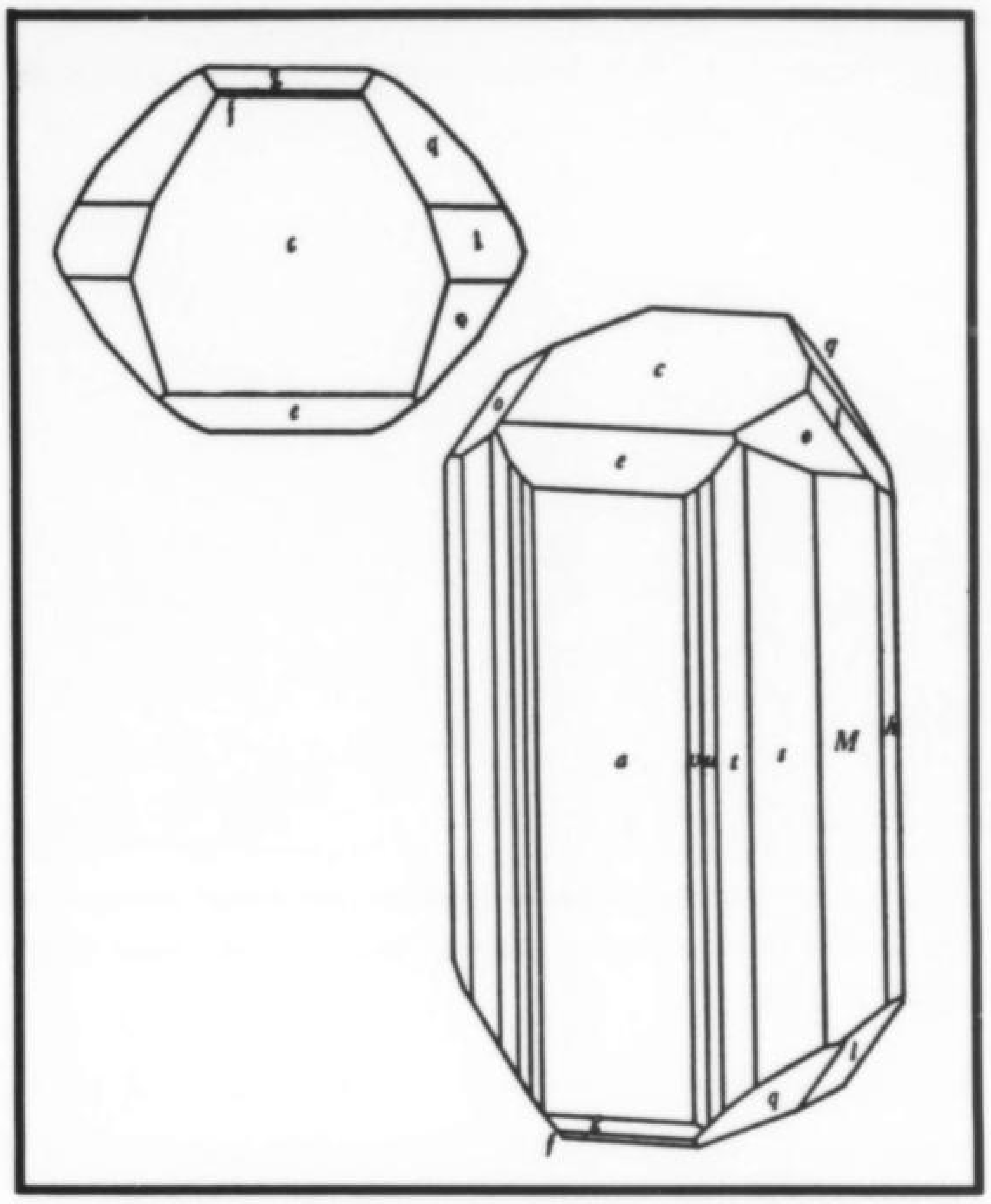

Fig. 5. **Gordon's crystal drawing of "rinkite" (mosandrite) from Naujakasik. From ANSP Proceedings, 76, 1924, p. 267.**

Fig. 6. **Camp at head of Kangerdluarsuk fjord. Gordon photo. From ANSP Year Book, 1925, p. 3-12.**

Fig. 7. **Camp at Naujakasik, looking southwest along Tunugdliarfik fjord. Gordon photo. From ANSP Year Book, 1925, p. 3-12.**

hombic crystals "*a* catapleiite," indicating them to be unique from normal catapleiite and thus a possible new structurally-distinct species. O. B. Bøggild (*The Mineralogy of Greenland*, 1953, Copenhagen, 442 pages) later doubted (p. 253) that these crystals were a form of catapleiite and suggested they might be another mineral.

The second case of mistaken identity involved what seemed to the author to be an unusual type of thomsonite, a fibrous zeolite already studied by Gordon from other localities. The material collected was fluffy, pink, and proved to be abnormally rich in potassium when chemically analyzed. It was found to contain fully 6% of K_2O, while thomsonite normally is free of potassium. Although Gordon noted that the optical properties were quite different from those characteristic of thomsonite, for some reason he failed to allow these chemical and optical data to tell him that he had an entirely different species. Some of his collected material, which he called "kalithomsonite" was investigated ten years later by M. H. Hey and F. A. Bannister (*Studies on the zeolites Part IV. Ashcroftine*; Min. Magazine, V. 23, 1933, p. 305-308) of the British Museum, who proved it to be a new mineral and named it *ashcroftine*. Gordon had already noted confusion on the reliability of the optical data given in the literature for thomsonite, as treated in his already-cited paper dealing with the optical properties of this zeolite, which may be part of the reason for his error. Such an error in mineral identification was compounded by his near-isolation as a research mineralogist with few around him competent to advise and pass on his work and by the fact that the equipment for research available to him at the Academy was wholly inadequate.

In the *Proceedings* of 1925 (Vol. 77, p. 1-13) in a paper *Mineralogical Notes, 1-10* on crystallographic and optical studies of a number of minerals from various localities, Gordon described the results of his crystallographic research on ancylite from Greenland. This was an extremely scarce rare-earth carbonate on which crystallographic and

Fig. 8. **Looking northeast along Tunugdliarfik fjord from Naujakasik, with high peak of Igdlerfigsalik in far distance. Gordon photo. From ANSP Year Book, 1925, p. 3-12.**

optical data had been very incomplete. Measurements of the tiny crystals he collected at Narsarsuk led to an improved crystallographic orientation and designation of the faces present, while his determination of the optical properties were the first accurate data of this type to be recorded for this species. Gordon's crystallographic and optical data are those given for ancylite in the second volume of *Dana's System of Mineralogy* (1951, pp. 291-293). For recent crystallographic and other data on this mineral, see *The Mineralogical Record* (Vol. 2, No. 1, 1971, p. 18-25, 36).

Two years later, in the *Proceedings* of 1927, (Vol. 79, p. 193-205), there was one more report on the Greenland minerals. This was a thirteen-page paper *On Arfvedsonite, riebeckite, and crocidolite from Greenland* in which Gordon treated the optical properties and chemistry of the sodic amphiboles, arfvedsonite and riebeckite. The data were chiefly on specimens of these species collected by him at Narsarsuk and Nunarsuatsiak, with the optics his own and chemical analyses supplied by H. S. Washington of the U. S. Geological Survey and E. V. Shannon and F. Wyncoop of the U. S. National Museum. What made it a useful contribution were the comparisons and interpreted relationships between the carefully investigated Greenland minerals and similar amphiboles from other localities, on which reported optical data especially had been in part confused. His new data helped to clear up some of the confusion on identification of these closely-related species, and some of them were incorporated into subsequent standard reference works on descriptive and optical mineralogy, as in the 1934 edition of the Larsen-Berman Tables (Larsen, E. S. and Berman, H., *The microscopic determination of the nonopaque minerals*; U. S. Geol. Survey Bull. 848, 1934). Detailed crystallographic measurements and angle tables were also given in Gordon's paper for unusually perfect and complete crystals of arfvedsonite collected by him at Nunarsuatsiak.

FIRST JOINT MINERALOGICAL MEETING AT TUCSON A GREAT SUCCESS

This year witnessed the inaugeration of a program of papers on mineralogy held in conjunction with the Tucson Gem and Mineral Show, Tucson, Arizona, February 9-12. The overwhelming success of the maiden effort greatly enhances the prospect of the program becoming an annual event, always coattailing a major mineral show.

The sponsors of the 1974 edition included the Mineralogical Society of America, Friends of Mineralogy, Mineral Museums Advisory Council, Tucson Gem and Mineral Society, and the University of Arizona. A full schedule of twenty papers was spread over Sunday and Monday. Of these, five related to the general theme "Mineralogy and Paragenesis of Porphyry Copper Deposits", six under the heading of "Mineral Nomenclature, Terminology and Systematics", and nine were offered in the "General Technical Session". The speakers came from all over the country and Canada.

Field trips to Bisbee and open pit mines near Tucson were another feature of the session. The sponsors are to be congratulated, particularly in view of the limited amount of time in which they had to put the whole production together.

A GUIDE TO

Wendell E. Wilson
**Dept. of Geology and Geophysics, University of Minnesota,
Minneapolis, Minnesota 55455**

Photos by the author

ad•ven•ture (ăd věn′ chər), — n. 1. an undertaking of uncertain outcome; a hazardous enterprise. 2. an exciting experience. 3. participation in exciting undertakings or enterprises: *the spirit of adventure.* 4. a commercial or financial speculation of any kind. 5. *Obs.* peril; danger. 6. *Obs.* chance.

The American College Dictionary

Going into a mine, particularly one long abandoned, requires a certain adverturousness. Those gaping black holes can look foreboding, and every collector who has ever gone down has wondered at one time or another what ever possessed him to go into such a place. The dangers are real, but fortunately very very few collectors are ever seriously injured underground. Inexperienced, unprepared beginners who do not take the dangers seriously are the most vulnerable to accidents.

Whether a mineral collector has the opportunity to collect underground usually depends on his geographic location. There are far more underground workings available in the Rocky Mountain Region and several of the so-called "Tri-state" districts of the central states than there are in the rest of the country. Quarries occur in a somewhat different distribution, and are not specifically considered here. However, many of the principles and techniques of underground collecting are also applicable to surface collecting. At the risk of boring the experienced collectors, even the most obvious suggestions are presented here in the interest of completeness.

COLLECTING IN WORKING MINES

When planning a trip to a working mine, write to the owner first and make an appointment to see the mine and mill operation. Be definite about wanting to collect specimens, but emphasize that you would like to learn all about their operation. Suggest several dates for them to choose from, then confirm your visit with a post card or telephone call before you arrive.

It is always an excellent idea to do your homework before visiting the mine; go to a library and read up on the area. Consult the *Bibliography of North American Geology* and the indexes to *Economic Geology*, the *American Mineralogist*, state Geological Survey bulletins, and Bureaus of Mines publications, etc., to find background information on the area you are to visit.

Owners like to think you are interested in more than ripping off their minerals, and indeed you should be. The geologist or mine superintendent who guides your tour usually knows a great deal about the geology and mineralogy of the area. Often he can show you detailed mine maps and projections of drilling data back in the mine office. You will meet people with an endless supply of stories and interesting information; all you need do is prod them a little with questions and look interested. You will probably also be offered a tour of the mill, where ore is crushed and the valuable minerals concentrated before shipment to the smelter. It is always an interesting operation and worth your time. Ask them what elements they profitably retrieve, what the chemistry of their separation process is, what their theory is on the source of the mineralization, etc. In short, take maximum advantage of your visit by learning all you can from them.

As a bare minimum bring your hammer, chisel, good field boots and specimen bags or boxes. Your guide will generally supply you with a visitor's hard hat, an acid-battery light, and a raincoat if necessary. You may bring more equipment as outlined later, but you are limited in time for the tour so go as light as possible and be prepared to work fast when you get to the good collecting areas. If specimens are lying around loose or are easily removed it is sometimes most efficient if one person collects and one person wraps and packs. Be careful not to give the guide the impression that you are turning the visit into your own personal commercial operation. Emphasize that you intend to keep most of the specimens and trade the rest with other collectors. Then take as much as you can carry, and be satisfied. Commercial collecting can sometimes be discussed if the operation is a small one.

You can maximize your capacity by wearing something like an old Army jacket with many pockets, and perhaps even sewing in additional pockets. If the mine is wet, as most working mines are, ordinary cardboard boxes soon turn to mush and are useless. Bring canvas bags tied together in pairs so that you can carry them over your shoulders. Heavy-duty, waxed cardboard boxes with metal edges (made under license of the *Metal Edge Box Company*), such as diamond drill bits come in, are excellent anywhere. If the specimens are heavy (galena, for instance)

UNDERGROUND COLLECTING

Fig. 1. **A few of the items commonly used for underground collecting. Each is discussed in the text.**

don't overload yourself. The guide may have a long underground walk planned. And be sure to thank him after the tour.

Finally, be satisfied with no more than one or two visits to any particular mine, unless the operators are really sympathetic with collectors. You do not want to leave your hosts thinking that you have taken advantage of their hospitality. The public image of mineral collectors needs all the help it can get these days.

COLLECTING IN ABANDONED MINES

The collector is really on his own in an abandoned mine; the trip should be carefully planned. First do the requisite library research. Xerox all the mine diagrams you can find, and read the ore descriptions carefully to pinpoint likely collecting spots underground. Write to the U. S. G. S. for topographic maps of the area. Indexes to maps for each state are FREE, and the topographic maps are 75¢ each. Get the index first, then you can order maps by name.

Write to: Denver Distribution Center
United States Geological Survey
Federal Center
Denver, Colorado 80225

If possible, talk to collectors who have been to the mine before. They can give you invaluable information on dangerous places, good outcrops, closed sections of tunnel, alternate exits and entrances, etc. Of course it is always most desirable to go with someone who has been there before when you are visiting a mine for the first time. If you are a newcomer to underground collecting it is *imperative* that you collect with someone more experienced than yourself. If you can locate men who used to work in the mine when it was operating you will have another advantage. An interview can yield all sorts of helpful data, and they can sometimes be persuaded ($) to personally guide you to the best collecting places.

Collectors eventually learn to pay absolutely no attention to rumors and advice to the effect that a certain locality is completely mined out of specimens. The person telling you this may simply mean that no more good crystals are visible in the mine, but how does he know what is waiting even one inch into the walls or veins? On the other hand, if magnificent crystals are jutting out of the walls in wild profusion, he's not going to want to spread the word until *after* he's gone back and collected them all. So either way such advice is unreliable. Another way such rumors get started is when people try to improve the price they get for a batch of specimens by telling the prospective buyer that the mine is caved or closed or whatever, and no more specimens will ever be coming out. The naive dealer then passes this bogus information on with the expectation of making his usual profit margin. Mineral collectors are not *all* a pack of compulsive liars, but a few definitely are.

Make a special effort to determine the owner of the property and obtain permission to collect. Often the state Geological Survey or Bureau of Mines will have this information if the owner is not named in the literature. Remember, there *is* no unowned property.

Before leaving for the mine you should always inform at least one person of your plans and leave a map with him even if it is only hand-drawn. Give them instructions to call out the Rescue Squad if you are more than 12, or perhaps 24, hours late in returning. This gives you ample extra time to get carried away mining a big strike, but not enough time to die of thirst should you break a leg or become otherwise trapped. The *last* thing you want is to get the Police and Rescue Squad out to the mine in a panic only to find you chipping away in happy oblivion. Such incidents can cause an owner to close his mine. For this reason it is best *not* to leave instructions with a high-strung mother or wife who will call the Police when you are five minutes late. If you leave word with friends who are experienced collectors they can personally check on your safety. Perhaps a rescue team could be organized that anyone could call in an emergency. This is better than calling the Police and upsetting the general public.

A collecting party of two to four is usually the best number. Never go alone and never take children or pets underground. Do not take people who are squeamish about the dark, heights, tight places, insects, dirt, or hard work.

To avoid arguments it is best to agree on the arrangement for dividing up the specimens *before* going underground. A book could be written on this topic alone, but the formula we usually use is that the discoverer of a pocket gets the best specimen or two, and the remainder is divided equally among him and the other members of the party. For an even split between two parties (or more) you might try having one person divide the specimens into two equal groups, and allowing the other person to choose the half he wants. I guarantee the first person will labor diligently to achieve a precisely equal split. Or you can decide who gets first choice through tosses of a coin, and rotate single choices from there. Sometimes where a single fine specimen is at stake the only alternatives are to sell the specimen and split the money, or to bid to each other for how much you are willing to pay for your partner's half. Of course some people prefer to trust their own luck, and specify that everyone keeps exactly what he finds. This can be a troublesome subject; Dick Bideaux comments that he has seen collectors decide a split by fistfight.

Another book could be written on auto problems in the field. If you will be travelling in sparsely inhabited country your safety can depend on the reliability and repairability of your vehicle. Be sure it is in top condition, carry extra oil and water, and if possible carry *two* spare tires. Also bring an extra fan belt, a good tool kit, and some flares. Be sure of the obvious things, such as a workable jack. A five-gallon gas can (filled!) is also a wise precaution. A good pamphlet on desert survival can be a life-saver in arid regions.

EQUIPMENT

Assembling a complete set of tools and equipment can be a time-consuming job. You may experiment with a dozen chisels before finding the ones that work best for you. But in general you should consider at least the follow-

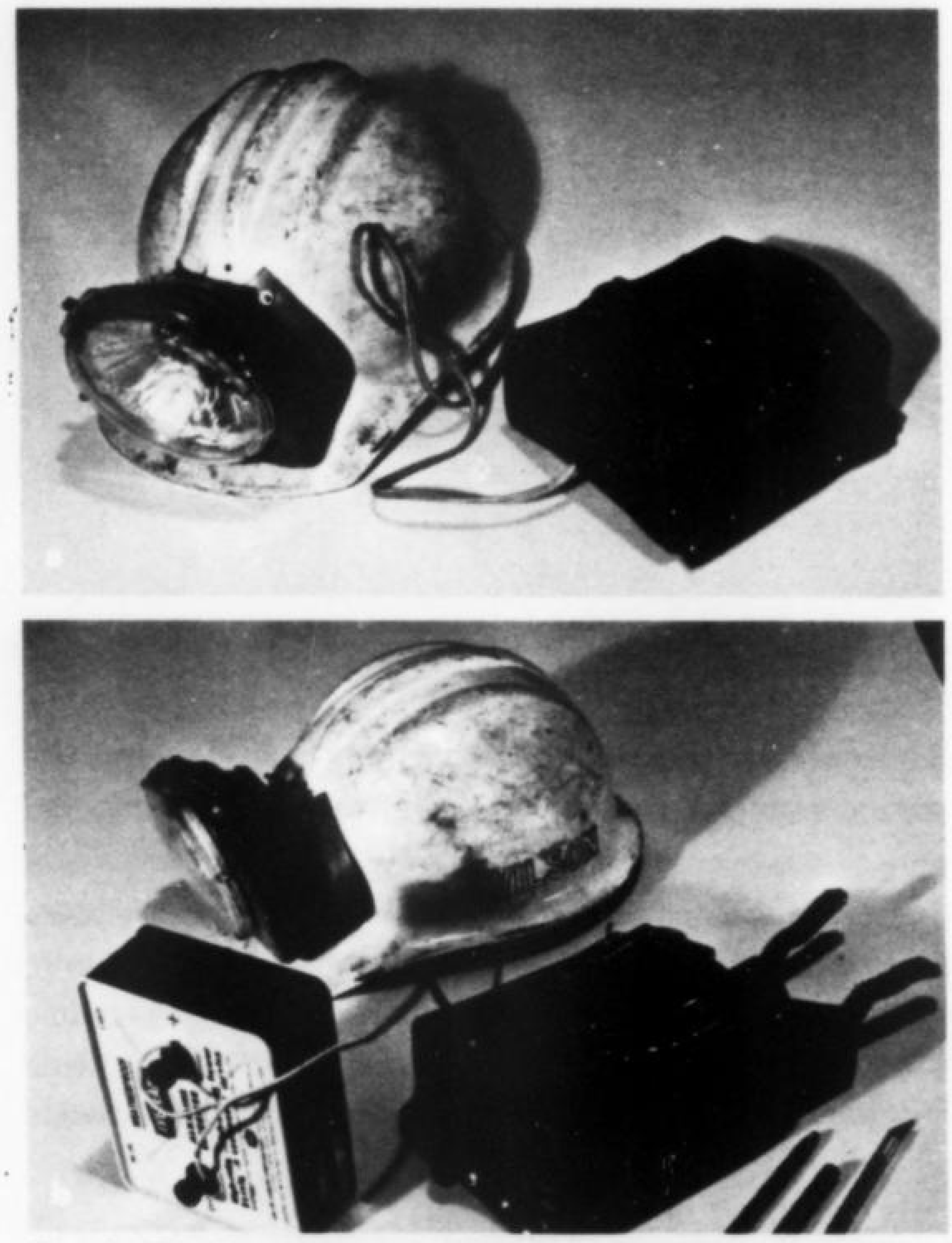

***Fig. 2.* The hard hat and light system used by the author. Notice the large reflector, aluminum foil diffuser, and the small bolts which secure the light to the hard hat. The leather case is specially designed to hold an Eveready alkaline six-volt cell (no. 520). The case can easily be constructed using the tools shown in 2b. Instructions and a pattern for the leather can be obtained free from the author (but 25¢ for xeroxing and postage would be appreciated). Cost of the leather and rivets is about $3.00, tools are about $3.00 more.**

ing pieces of equipment, even if you do not always carry them all with you.

1. *Canteens* or plastic water bottles. Water is heavy but you will thank yourself for bringing plenty when you get tired and thirsty. People differ on this, and climate has an influence, but I usually consume about a quart every four or five hours when working hard. Arid country, which is often so excellent for collecting, can prove deadly if you run out of water.

2. *Food.* The amount of food you should pack obviously depends on how long you plan to be gone and how far from civilization you will be. For emergencies bring food with a high energy content, such as candy bars, peanut butter, or Space Food Stix. Take more food than you think you will need; it's far better to have too much than too little.

3. *Hard hat.* Compared to rock your skull is very soft.

4. *Collecting tools.* These should include two or three chisels of different sizes, one or two hammers of the heaviest comfortable size, a few small tools such as dental picks and tweezers, a small pry-bar or large crowbar (three to eight feet in length), and any special tools the locality requires. The crowbar may sound heavy but it actually comes in handy as a cane when you are heavily loaded, and is worth its weight in crystals when you need to tear through a lot of rock or remove dangerous-looking overhangs of rock. Amazingly, a crowbar makes an excellent large chisel when used with a crack hammer (small sledge). Special tools might include pieces like long-handled grabbers for reaching into long, narrow veins and crevices.

5. *Lighting.* Because there is such a bewildering number of choices, a separate section has been devoted entirely to lighting (q.v.). In addition to a supply of extra batteries and bulbs, each person should always carry at least one small spare light such as a flashlight. If your bulb burns out, batteries or carbide need changing, or technical difficulties beset you, you'll need the extra source of light.

6. *Boxes, bags, and packing material.* Most collectors I know use beer flats and toilet paper or paper towels. As mentioned above, neither are of much use in wet mines. Plastic bubble-sheets and canvas bags or waxed, wire-edged boxes work better in such situations. It is profoundly obvious that abandoned mines are more liable to be dry, since workings below the water table will be filled with water and thus be inaccessible. If boxes are used it is a good idea to have masking tape or nylon filament tape with which to tape the boxes shut before hauling them out. Cotton, small boxes, and egg cartons are useful for preserving especially small or fragile specimens.

7. *Rope.* One hundred feet of rope is usually adequate. It is useful for hoisting specimens and tools up or down shafts, or for hoisting *yourself* up or down sharts. If a ladder breaks and strands you somewhere, your rope may be your only means of escape.

8. *Field boots.* They should have "Vibrum-lug" soles (see Fig. 1), high ankles, and good thick leather. Steel toes are not a bad idea, and many mining companies require them for their employees.

Fig. 3. **Entrance to the Silver Hill mine, near Tucson, Arizona.**

9. *First aid kit.* Or bring plastic bandages at the very least. Cotton and adhesive or masking tape can be used for a temporary bandage. Remember a snake-bite kit if you will be working in snake country.

10. *Safety glasses.* A friend of mine, a geologist for 35 years, knows no less than four one-eyed geologists who have lost an eye because of steel chips from rock hammers. Even the most carefully tempered hammers have been known to chip, and rock chips can be just as dangerous.

11. *Back-pack.* With a complete set of equipment, you'll want something to carry it all in.

12. *Maps and notes.* Knowing where you are underground on a map is comforting, and you will want to make detailed notes of the locations of the best veins.

13. *Nails.* Ladders often need repairing, and who will do it if collectors don't? Also you may want to gather up loose boards from various places in the mine to construct a platform or brace to assist you in reaching a cavity.

14. *Wedges.* Many collectors like to use steel wedges for prying rocks apart and for opening veins and cavities.

15. *Sleeping bag and air mattress.* If you plan on spending a night or two underground, an air mattress is a necessity.

16. *Explosives.* (see Techniques section)

17. *Knee pads.* Almost any sporting goods store carries knee pads as used by basketball players. They have thick foam rubber pads and are held around the knee by an elastic band. All too often one is forced to work kneeling, or crawl on hands and knees over jagged rubble. The pads will save you a lot of pain.

18. *Work gloves.* Except when fine work is required, gloves can save wear and tear on your hands.

19. *Camera equipment.* Photographs help preserve the fun of your experiences, and can make an interesting slide show for friends. Don't forget flash bulbs or an electronic flash. For dramatic, available-light shots you'll need a tripod.

20. *Dust mask.* This is a filter worn over the nose and mouth, and held in place by an elastic strap. They are available in most large drug stores.

LIGHTING

Before examining the many alternatives, consider the qualities of an ideal system. It should provide bright light at a low cost per hour and should weigh as little as possible. Furthermore, it would be convenient if the power source did not require replacement or recharging too often. It should be reliable and easily repairable in the field.

The typical miner's type of rechargeable acid-battery unit is extremely inexpensive to run but requires recharging every eight hours. The eight hour limit makes it almost useless on collecting trips of more than one day's duration. Carbide lamps are also inexpensive to run (about 5¢ per hour), but produce a lot of heat in tight places, use up potentially precious oxygen, require refilling with calcium carbide and water every two hours or so, can cause fire and burns and can become clogged by dirt and water. They become quite hot (thus difficult to handle when refilling), have a tendency to gurgle and drip, cause the hard hat to be front-heavy, and in general make a nuisance of themselves.

In my opinion the best lighting is with conventional batteries and bulbs. Here you have a choice between many brands of six-volt "dry cells", D-cells and various alkaline cells, to mention only a few. *The Minneapolis Star*, November 27, 1972, published results of its own lab study of batteries made by many manufacturers. In general, the cost of alkaline D-size batteries is higher but their *cost per watt-hour* can be as little as half the cost of regular (carbon-zinc) batteries. The cost per watt hour was about the same

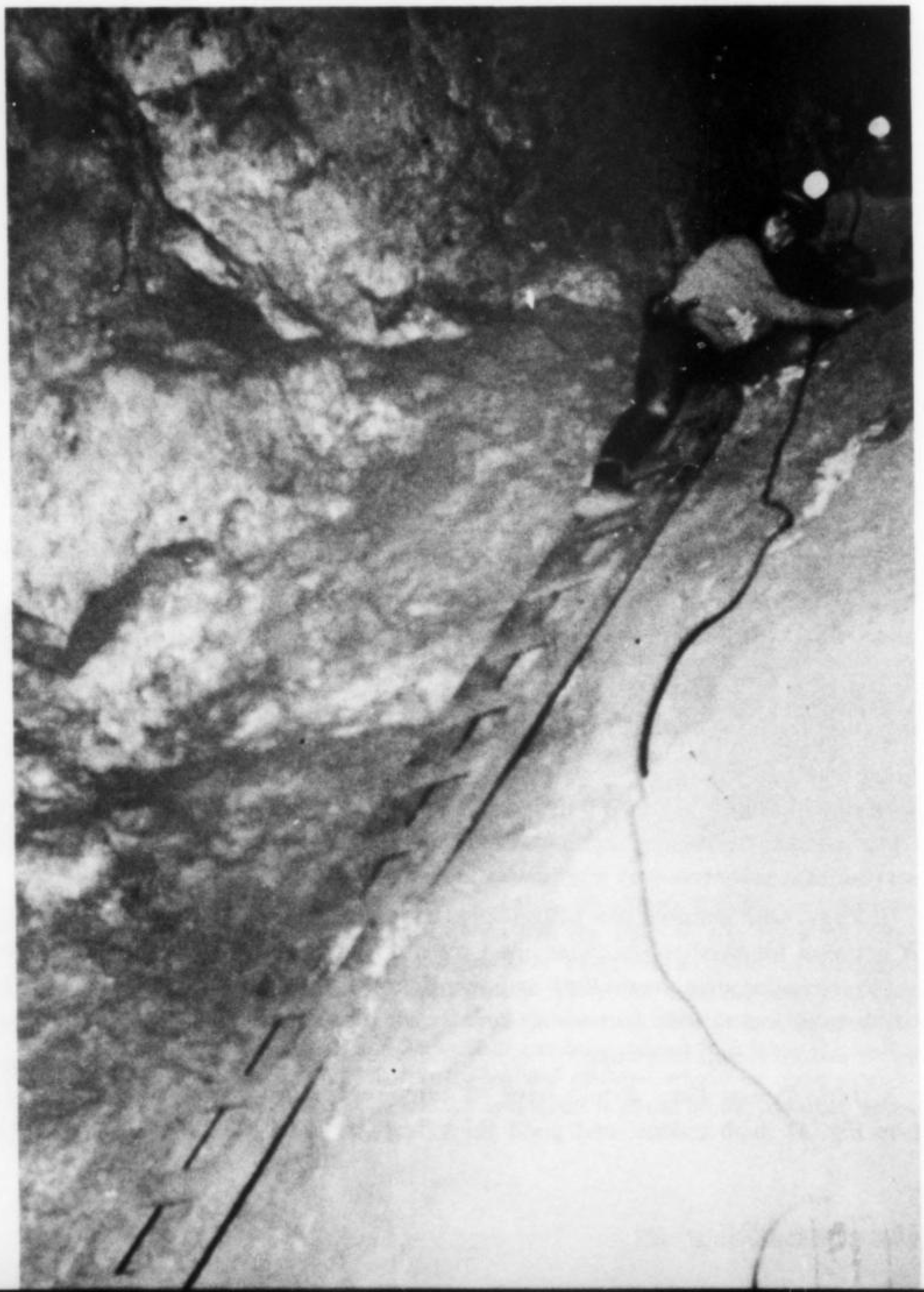

Fig. 4. **A stope in the Silver Hill mine.**

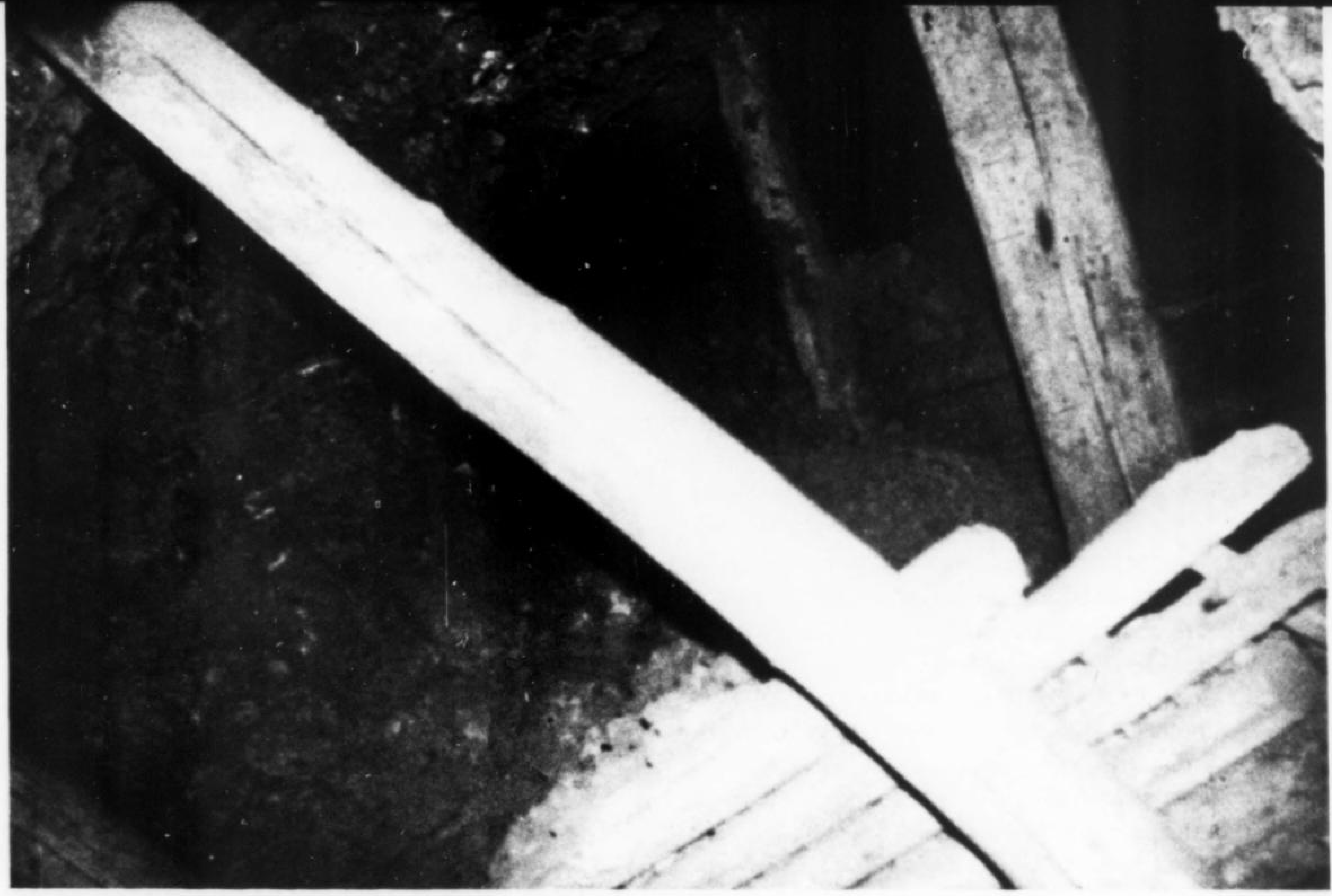

Fig. 5. **Backfilled stopes in the Red Cloud mine, Yuma Co., Arizona.**

for all brands of D-size alkaline batteries tested, but Duracell alkaline batteries contained about 25% more power per cell than the other brands of D-size alkalines. In other words, with the Duracells your light would cost no more, and you would have to change batteries less frequently.

Table 1 shows the results of tests I conducted to determine the intensity of light and duration of power yielded by various types of batteries, and also carbide, under typical collection conditions. The Eveready no. 520 battery was not tested in the *Minneapolis Star* study. The most significant finding is that the best all-around power source tested has the highest unit cost—a discouraging factor unless viewed in light of the test data. The Eveready alkaline six-volt cell no. 520 is second only to carbide in brightness, power-to-weight ratio, and cost per hour of light. Carbide is the most efficient and economical, but light from carbide lamps is distinctly yellow. And note that a carbide lamp would require refilling *12 times* to equal the hours of light yielded by a single Eveready no. 520 cell. There are many other disadvantages of carbide already mentioned, which in my opinion make it less desirable than the battery. The test data show that higher efficiency (a high hours-to-weight ratio) yields lower cost per hour, at least for the systems tested here.

Table 1. Test data on lighting systems.

Quantity	Type	Weight in ounces	Approx.[1] cost	Bulb used	Hours of[2] useable light	Cost per hour	Hours of Light per ounce
1 filling	Calcium carbide and water	1.5 (carbide) 1.0 (water)	$ .12	none	2.5	5¢	1.00
1	Eveready alkaline six-volt cell no. 520	40	$5.00	PR15	32	15¢	.80
5	Eveready alkaline D-cells, no. E95	23	$4.00	PR12	16	26¢	.70
4	Eveready alkaline D-cells, no. E95	18	$3.20	PR15	12	29¢	.67
1	Eveready carbon-zinc cell, six-volt, no. 510S	23	$1.20	PR15	3.5	34¢	.15
5	Burgess carbon-zinc D-cells, no. 2	14	$ .90	PR12	2	45¢	.14

[1] Cost shown is that charged at a Minneapolis discount department store, rather than the actual list price which people rarely must pay.

[2] The batteries were drained for eight hours per day (where possible) to simulate the drainage schedule of use for collecting. The lower limit of acceptable light level used in the determinations is purely the opinion of the author, but the lights were all completely dead 1 to 2 hours after the "acceptable" lower limit was reached. Carbide provided the brightest light, alkaline batteries were less bright, and standard (carbon-zinc) batteries gave the lowest overall light level, as measured by a photographic light meter.

If you cannot find the no. 520 cells for sale in department stores or camping equipment shops near you, ask a dealer to order them. Or contact the nearest Union Carbide distribution center and see about buying by mail.

Until recently Eveready manufactured a hand-held light (model 112) which contained a holder for five D-cells. This unit could be modified into an excellent belt pack by simply cutting away the reflector and splicing in a wire to your hard hat. Now that the model 112 is obsolete there is no unit on the market that I know of which has a five D-cell holder. This is unfortunate since five D-cells are the next best battery combination after the no. 520 cell.

For my own light I adapted a hand-held light (Ash-Flash model L70, about $3.00 from Ash-Flash, South Norwalk, Conn., 06856) to use with a hard hat. I chose the Ash-Flash unit because it has a very large reflector and a side-mounted lever-switch. (The Sonco Hand Lantern no. 6400 is apparently identical to the Ash-Flash L70.) I pried off the reflector cover temporarily in order to line the reflector with aluminum foil, frosty side out, to produce diffused light rather than a pencil beam. Then I cut away the battery holder and back, being careful to leave flanges as shown in Fig. 2, and bolted the unit to a hard hat. For a belt-mounted battery pack I had previously used a five D-cell holder, until I tested the six-volt alkaline cell and found it to be superior. The six-volt cell can be carried in a canvas canteen bag, or a leather case as pictured in Fig. 2.

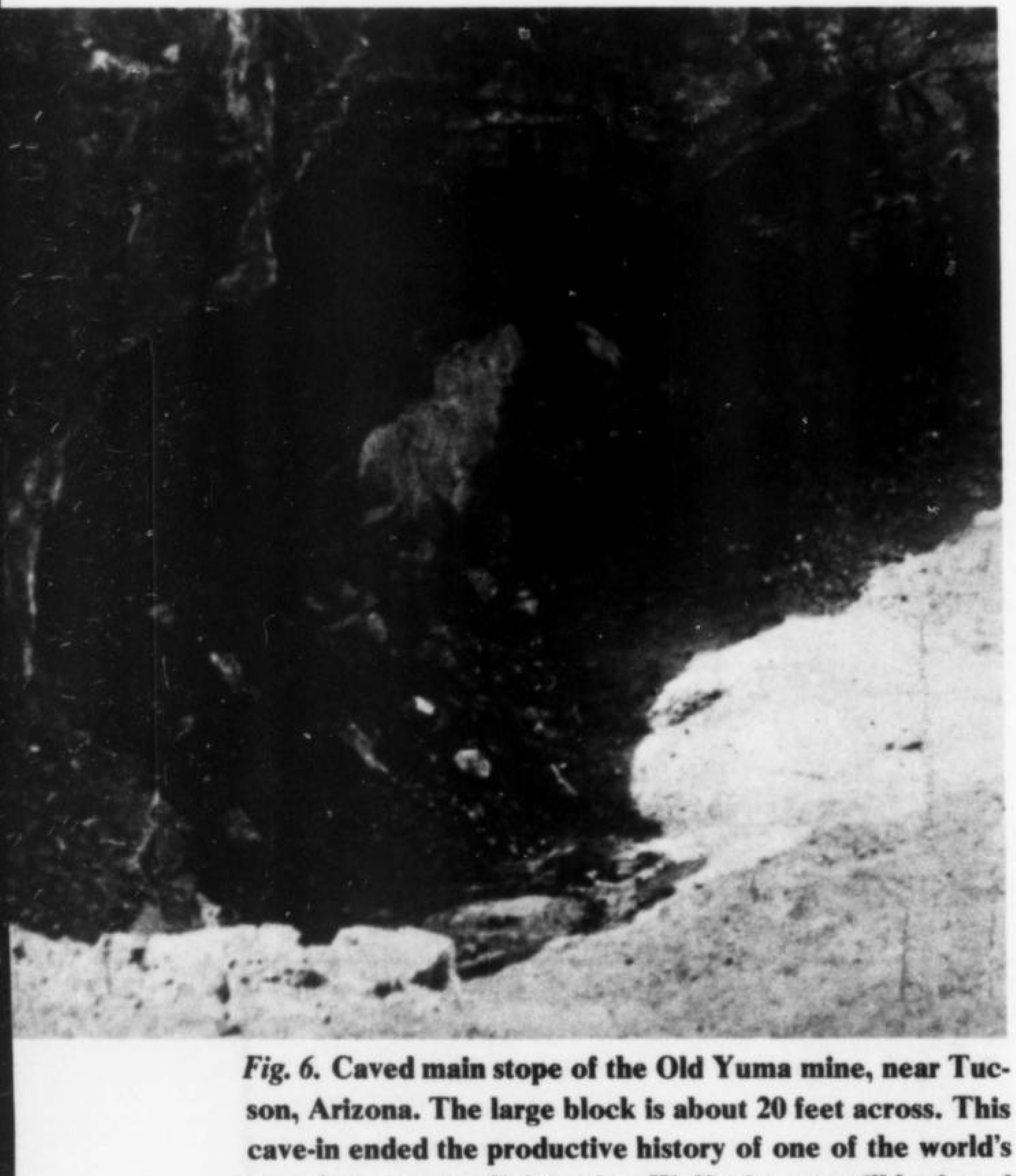

***Fig. 6.* Caved main stope of the Old Yuma mine, near Tucson, Arizona. The large block is about 20 feet across. This cave-in ended the productive history of one of the world's most famous vanadinite veins. Wulfenite can still be found elsewhere in the mine. No one is believed to have been in the mine at the time of the cave-in.**

There are other types of lighting available which are not attached to the hard hat. Fluorescent rechargeable units, gasoline-powered generators, (which must be left on the surface because of their exhaust), Coleman lanterns, and others have all been used by collectors, but are usually more trouble than they are worth, except back at camp.

TECHNIQUES

If a mine is particularly complex and confusing you may want to mark your way by stuffing pieces of toilet paper in cracks in the tunnel walls as you walk in. Follow your movements on the mine diagram so that you always know exactly where you are. Beware of what appear to be smooth concrete floors; they can actually be deep water covered by a layer of dust. Carefully inspect all woodwork for evidence of dry rot, and be alert for bad air.

Collectors usually begin by exploring every inch of tunnels and stopes in a given area. Sometimes several hours of reconnaissance is the best course of action. Consult the notes you have made from publications and interviews and locate the main veins and fracture systems, as well as the areas which have produced the best specimens for others in the past. Once you are thoroughly familiar with the mine you can choose the most promising place to begin collecting. Stay away from high, precarious positions unless you have had some training in mountain climbing techniques.

The place you choose may need some work before you actually dig in on the crystals. Thorough collectors often muck out (remove rubble and debris from) tunnels and stopes on a small scale in order to uncover more of the vein or to create a more comfortable and safe working space. As mentioned above, it is usually possible to find free lumber around the mine with which to construct braces or platforms. Finally, be sure to check the rocks above your head. Bang on them with your crowbar from a safe distance, or pry on them. If you hear a hollow sound, if the rocks move even a little, or if dirt and dust fall out from the cracks around the rocks, you must be sure to remove as much of the loose material as possible, or move on to another place.

Everyone has his own techniques of mining, but some general rules can still be formulated. If you find good crystals that you haven't the skill to remove, it is best to leave them for someone else rather than destroy them trying to get them out. Thorough, careful collectors will take as much time as is necessary to remove a crystal pocket or group undamaged. This may require spending hours or even days removing a large rock which blocks the way or opening up a cavity in hard rock. With narrow veins it is best to completely remove the rock *backing* one side of the vein, so that the pocket can be opened like a book. Trying to pry off a slab of crystals *into* a narrow pocket can destroy the crystals on both sides of the vein. If you

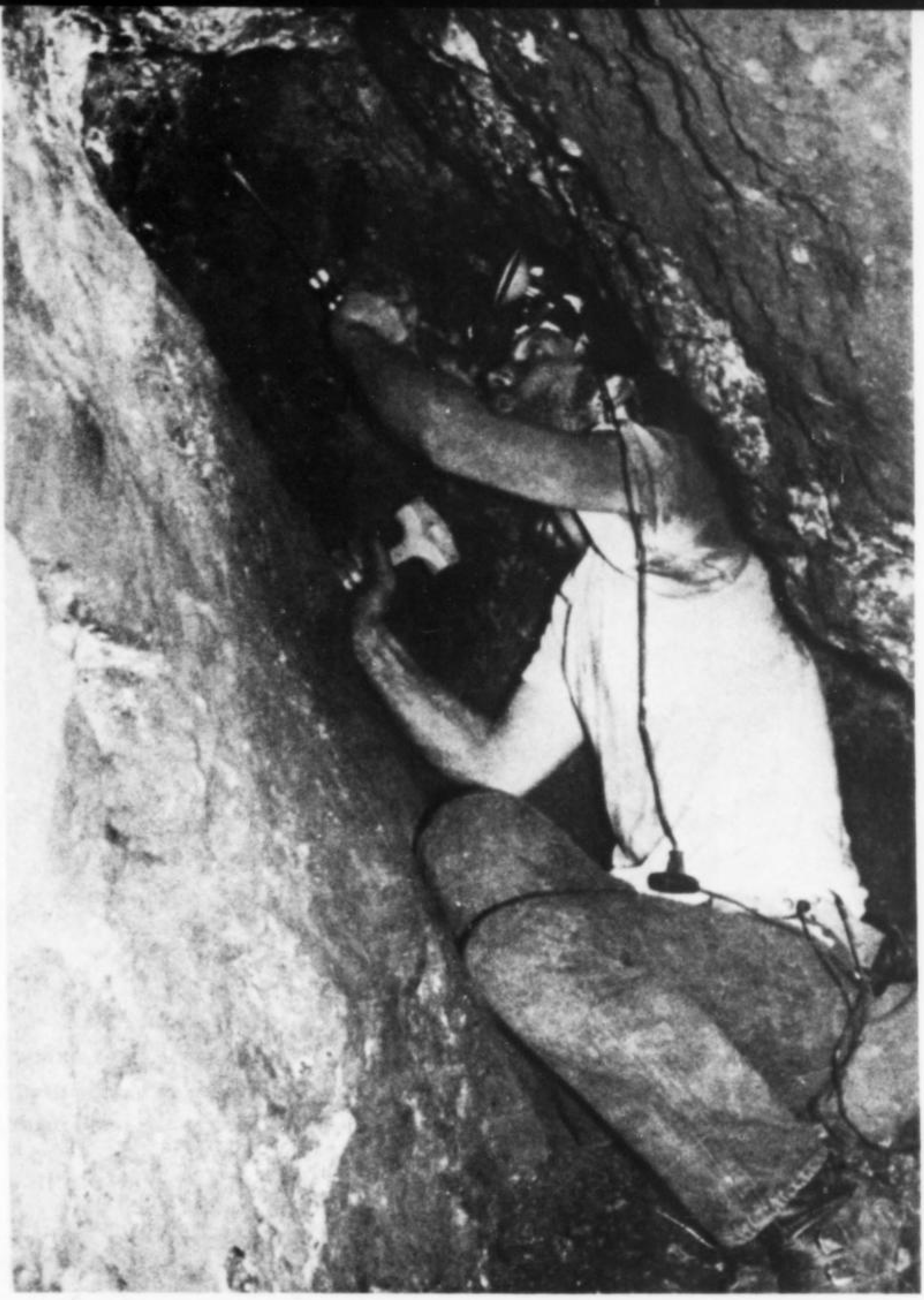

***Fig. 7.* A collector (Wayne Thompson) is shown here working a wulfenite vein in the 79 mine several years ago. This, incidentally, is the same place where Wayne found the magnificent wulfenite miniature pictured on the cover of the *Mineralogical Record*, vol. 3, no. 6. Wayne uses a canvas canteen bag attached to his belt to hold a large 6-volt battery.**

haven't the patience to do it right, leave it for someone else.

I understand that in the Alps and elsewhere collectors often leave their tools in a pocket while returning for supplies or sleep, and other collectors will not touch the pocket. This sort of honor system is admirable, but in the United States you cannot be sure that whoever comes across your tools and pocket will be familiar with, or care about, the custom. At least you yourself can respect someone else's right to his discovery if you find tools in a pocket.

If you are tunnelling it is doubtful that you will have available good wood for shoring. If possible, try to arch the top of your tunnel for maximum structural stability. Don't leave loose or overhanging blocks that could fall without warning while you are working.

The most universally ignored safety rule is "never work over your head". If there are good crystals in the ceiling or high up on a wall, they are impossible to resist no matter how much dirt falls in your face. At least avoid areas where dangerously loose rock is present and always be prepared to jump out of the way in a hurry. Often the job requires two people: one to chisel and one to catch the specimens. A cotton-lined box held below the pocket often saves a lot of specimens otherwise lost.

Common sense is the key to safety underground. The original miners knew what they were doing when they constructed the timbering, wall braces, platforms, bulkheads, pillars, ladders, etc. Study the construction of the mine so that you will not inadvertantly defeat its purpose (I have heard collectors actually suggest mining out a pillar because it contained good crystals!). Study the cleavage, bedding, fracture patterns and fault orientation of the rock so that you can avoid working in structurally weak areas.

Blasting is a valuable technique in the hands of collectors who know what they are doing. The problems are that most collectors do *not* know what they are doing, and most mine owners like neither the prospect of someone being injured on their property, nor someone tearing down large areas of their mine. Too many mines have been closed to collectors because of one incident of imprudent blasting. If the timbers catch fire the entire mine can be gutted and

Fig. 8. The walls of this section of the 470 level of the 79 mine are honey-combed with cavities lined by blue hemimorphite. The wooden structure at right is an ore chute. Such chutes were originally used to funnel ore from a stope above into ore cars on a narrow-guage track. The ore was moved from there to the main haulage shaft or incline, and thence to the surface. Ore chutes are sometimes the only remaining entrances to old stopes.

Fig. 9. A burned out incline in the Rowley mine, Maricopa Co., Arizona. Notice the charred remnants of shoring on the floor of the incline.

COLLECTING TRIP CHECK LIST

1. Canteens (filled)
2. Food, drink
3. Hard hat
4. Hard hat light
5. Flashlight
6. Extra batteries, bulbs (carbide)
7. Hammer(s)
8. Chisel(s)
9. Wedge(s)
10. Small tools
11. Crowbar, prybar
12. Specialty tools
13. Rope
14. Boots
15. Nails
16. Safety glasses
17. Pack or field bag
18. Knee pads
19. Work-gloves
20. Dust mask
21. Collecting boxes, bags
22. Packing material, cotton
23. Masking tape
24. Maps, notes, pen
25. References, letters
26. Compass
27. Tent, camping equipment
28. Spare blanket(s)
29. Sleeping bag
30. Air mattress
31. First aid kit
32. Camera equipment, film, bulbs
33. Spare gasoline can (filled)
34. Spare cans of oil, water
35. Spare fan belt
36. Tool kit
37. Check spare tire(s), jack
38. Notify someone of plans
39. OTHER –

Fig. 10. Xerox this check list for use each time you are planning a trip. (Of course you may not wish to take ALL of these items on any particular trip). Write in extra items at the bottom or on the back.

caved. Simply handling dynamite can cause severe headaches (nitroglycerine is absorbed through the skin), and the gases given off in the explosion can be poisonous in an unventilated area. Static electricity can detonate electric blasing caps, as can any sharp shock. Surprisingly, dynamite is very difficult to detonate without caps; it is the caps that are most dangerous. Dynamite usually must be purchased by the case, and most collectors have no safe place to store it. Unless you have had formal training in the use of explosives you cannot be sure you know enough to blast safely and effectively. It only takes one mistake to vaporize yourself. For a thorough background on the subject consult *Blaster's Handbook* (1969), by du Pont. Copies can be obtained for $6.00 from

Polymer Intermediates Department
Technical Services Section
E. I. du Pont de Nemours & Company
Wilmington, Delaware 19898

CONCLUSIONS

When you go underground you have certain basic responsibilities to other collectors. Don't get hurt or trapped; don't damage the accessibility of the mine by causing cave-ins; don't provoke the mine owners; don't destroy specimens you haven't the skill to remove properly. And if you find something scientifically interesting be sure to donate or loan at least one specimen to an institution where it can be studied in detail.

Certainly collectors with experience different from my own have other techniques and advice. To share your knowledge with the *Record's* readers, send your comments to Dick Bideaux for inclusion in his column, "The Collector".

ACKNOWLEDGMENTS

The author would like to thank Mr. Wayne Thompson and Mr. Richard A. Bideaux, both seasoned field collectors, for critically reviewing the manuscript and offering helpful suggestions.

Editor's note: Because of the delay between the time manuscripts are received and the time they are published, prices quoted in articles may have changed somewhat. Price relationships generally remain the same.

The Photographic Record

by Wendell E. Wilson

LARGE FORMAT PHOTOGRAPHY

Everyone involved in 35 mm photography becomes frustrated sooner or later with the limits of resolution, sharpness and focus of his camera. Those razor-sharp, full-page enlargements in magazines and books are beyond his reach; a 35 mm slide could never produce a print of that quality. The answer is large-format photography, and the ultimate in this field is a contraption called the view camera.

For this installment I owe my sincere thanks to Mr. Jeffrey J. Kurtzeman. Mr. Kurtzeman, you may recall, did all of the mineral photography for the *Arizona Highways'* May, 1972, issue devoted to Arizona minerals, and has published other work in *Arizona Highways, Lapidary Journal*, and *Rock and Gem* magazines. He uses a 4 x 5-format view camera almost exclusively in his work, and it is his knowledge and experience that have produced the following discussion.

Most of us remember view cameras as those cumbersome black boxes carried about the country-side by such intrepid men as Matthew Brady in his photo documentation of the Civil War or Timothy O'Sullivan in his many voyages to the western frontier of a growing America. Notable twentieth century view camera photographers include such great men as Edward Weston and Ansel Adams. View cameras have been on the decline in the United States for some very obvious reasons. The main objections concern their size and weight, their slow and deliberate operation, and the expense of sheet film. In some of the European countries these objections were seen as negligible when compared to the image perfection which view cameras could achieve. A German periodical entitled *International Photo Technik* is available at many photography stores and offers numerous examples of this fine school of photographic philosophy. These same Europeans have studied their cameras and made many improvements. The modern view camera is a very finely designed and engineered tool. The view camera has great versatility and can enable one to achieve results which are impossible with roll film hand cameras.

The view camera uses sheet film instead of film on rolls as used in 35 mm and 120-220 cameras. Operation is really quite simple. In a darkroom the sheets are individually loaded in holders with opaque covers. The image of the subject specimen is then composed and focussed on a groundglass (frosted plate in the camera back). Focussing is accomplished simply by extending or shortening the bellows; there is no focussing ring on the lens. The film holder is then inserted into the camera back, and the opaque cover removed from the film. The exposure is made, the opaque cover is replaced, and the film holder is removed. Another previously loaded film holder is then inserted into the camera back for the next exposure.

In figure 1 you can begin to sense some of the special features of the view camera. In actual use, each of the movements has a specific intent and yields a specific result.

Some of the more important uses for these movements are:

1) to achieve control of cropping without changing the camera position or the camera angle.
2) to achieve specific effects upon the plane of sharp focus, either to intentionally create zones of selective focus or to achieve fine focus of the entire image.
3) to eliminate or exaggerate the lines or planes of perspective in the specimen.

These movements are accomplished with the view camera in one or more of three places, the camera mount (tripod head), the lens standard, or the film standard. The bellows is the light-tight body of the view camera; it must be rigid to avoid collapse, yet flexible to movements brought about at the lens or film planes. The baffled construction of the bellows unit serves to give rigidity and flexibility, and also serves to catch and absorb unneeded or extraneous light from the lens.

Image-forming light comes through the lens in a cone shape and is focussed on a plane in space which is circular in shape, and is called the *beam circle of illumination*. The film is placed somewhere within this circular plane and produces a photographic image of the portion of the circle to which it is exposed, that is, the portion containing the specimen or desired part of the specimen. The film is considerably smaller in area than the beam circle of illumination. This allows the photographer a choice as to how he will position the film in the circle to achieve cropping and composition control. For this reason the film holder on a view camera can be moved up, down, right or left to position it as desired within the circle. A potential problem with this geometry is that the light not used on the film must be blocked out in some way. The baffling effect of the bellows handles this quite nicely. In the case of roll film cameras, bellows are usually not part of the camera system. The internal dull black paint in the lens tube of roll film cameras is considerably less effective for baffling extraneous light. Unbaffled internal reflections cause slight deterioration of the image.

The optical characteristics of view camera lenses are also quite different. The view camera lenses tend to be quite "slow", with relative maximum apertures seldom as fast as f/2.8. This might be considered undesirable in roll film cameras. However, by building a slower lens, the designer can concentrate on image perfection. Most view camera lenses have highly refined corrections for such optical problems as astigmatism and spherical aberration; most are also color-corrected for the entire visible spectrum, and are called apochromats. With rare exceptions, modern, high-speed 35 mm optics are significantly inferior. Whereas 35 mm camera lenses do not stop down below f/22 or f/32, it is not unusual to find view camera lenses capable of stopping down to f/64 and even further for increased depth of field. Magnification obtainable with view camera lenses (such as the Zeiss Luminar lenses) can extend to approximately 24X (linear magnification on the film) with no extension tubes or microscope equipment.

One of the most obvious advantages of the view camera is the size of the film. The most common view cameras use 4 x 5 inch sheet film whereas some use film as large as 16 x 20 inches and greater. The image size of 35 mm film is 24 x 36 millimeters and thus has an image area of 864 square millimeters. The very common 2 1/4 x 2 1/4 inch film image has an area of approximately 3,266 square millimeters. The popular 2 1/4 x 2 3/4 inch cameras have a film area of around 3,992 square millimeters. The 4 x 5 inch format camera yields a film image area of around 11,458 square millimeters. Given the understanding of film quality being equal, one can begin to understand why images of such fine quality can be obtained from larger format films. A sheet film image would have the potential of being more than thirteen times better in quality than a similar image in 35 mm. It's true that much of this difference is abosrbed in half-toning the image for reproduction. But the film image itself is the point of discussion for photographic quality.

As mentioned above, the view camera is capable of a variety of unique movements. These movements, enumerated below and in figure 2, are what make the view camera superior to other cameras for mineral photography.

1) rise and fall of the lens and/or camera back.

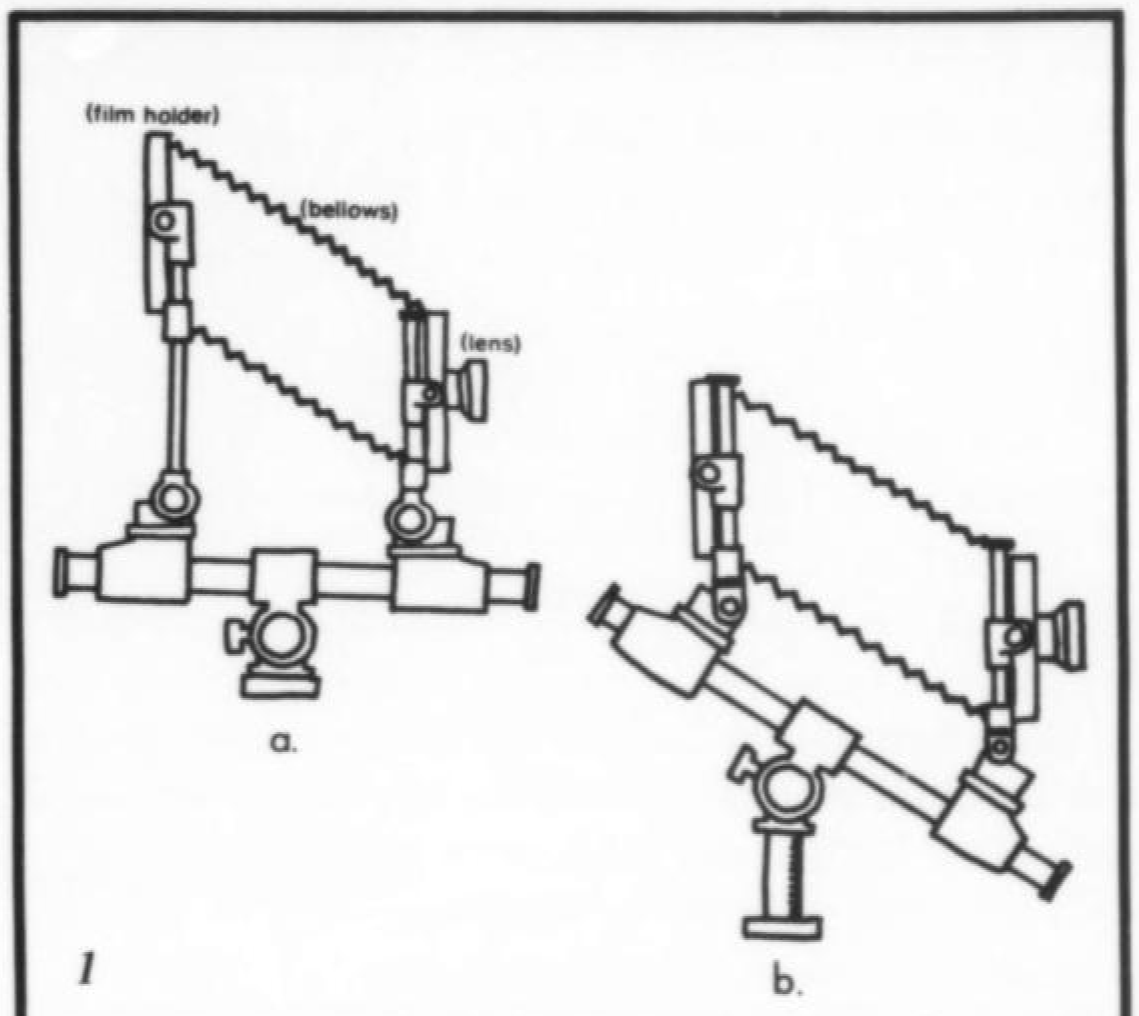

1

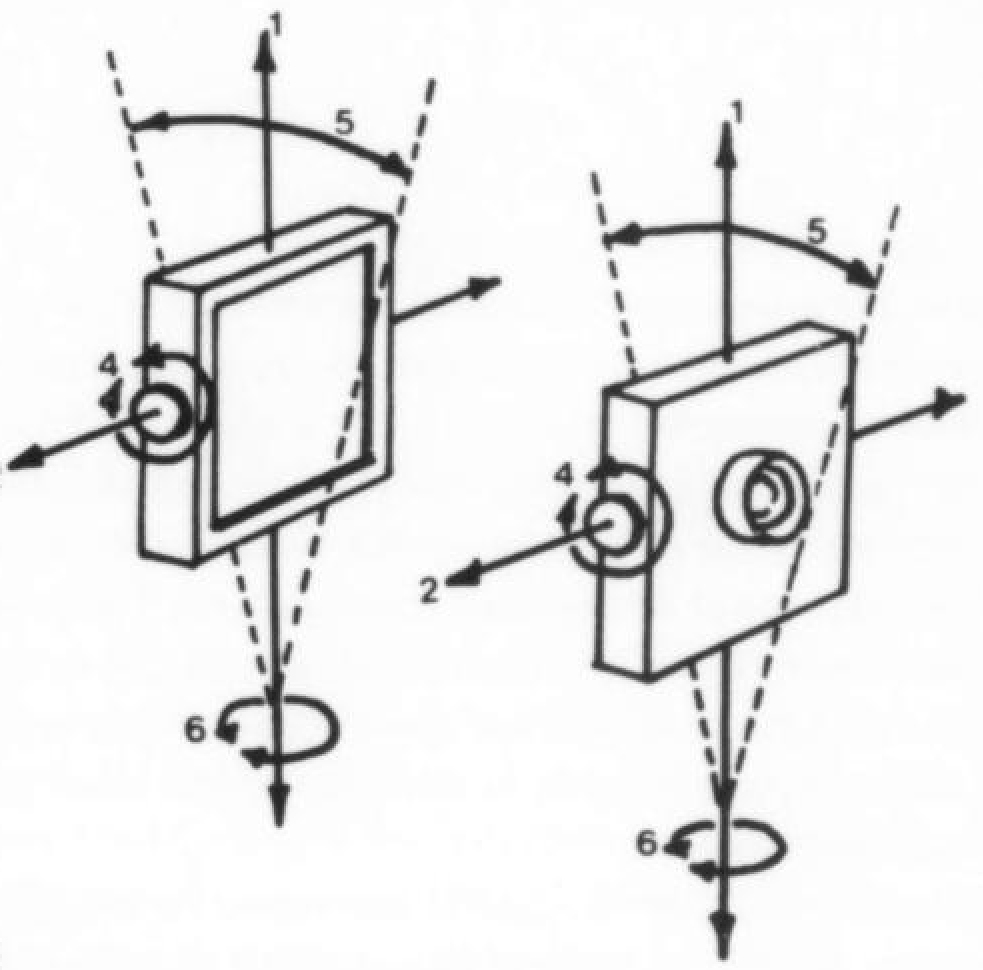

2

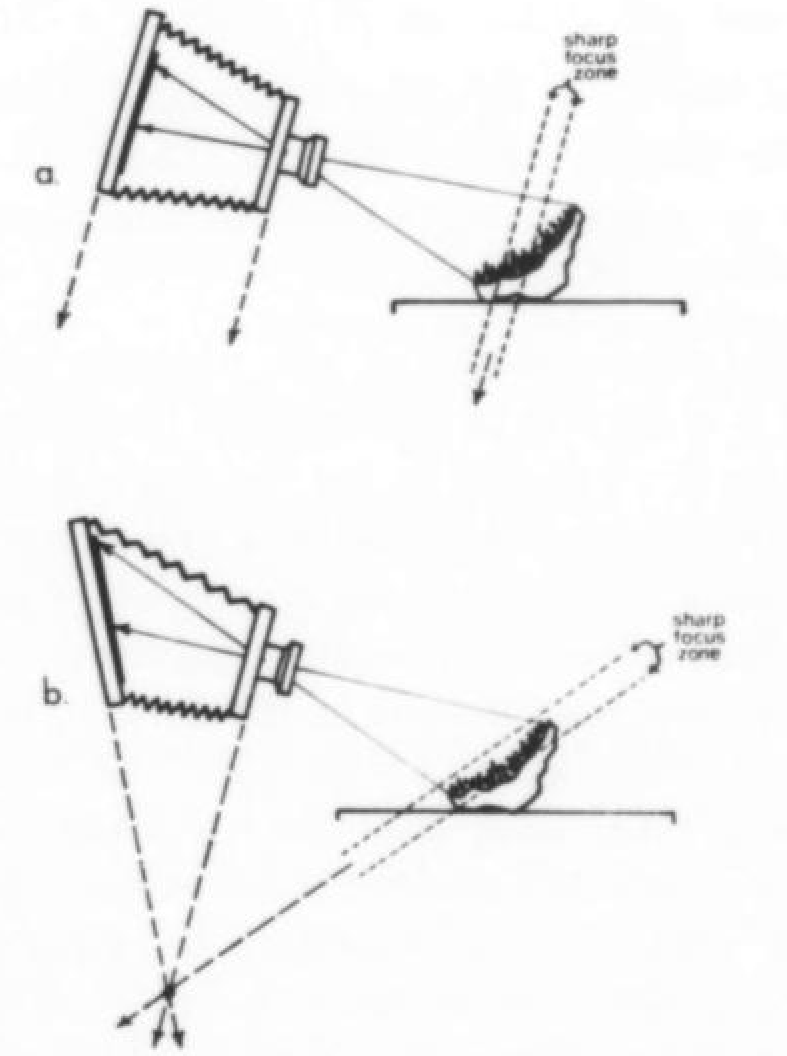

3

Fig. 1. **A typical view camera, the Linhof Kardan B System Camera. This illustration shows how similar camera positions can be obtained by rise, fall and tilt adjustments.**

Fig. 2. **Unlike 35mm hand cameras, the lens board and film holder of a view camera can be independently adjusted in a great variety of ways, as illustrated. Adjustment at the tripod head (#3, not shown) is also possible. (Bellows not shown)**

Fig. 3. **The unique adjustment capability of the view camera allows an angled specimen (a) to be brought into sharp focus (b).**

2) left or right movement of the lens and/or camera back.
3) movement of entire camera on tripod head.
4) forward or reverse swinging of lens and/or camera back about a horizontal axis through their center, perpendicular to the optic axis.
5) forward or backward tilting of the lens or camera back about joints at their base.
6) rotating the lens or camera back about vertical axes through each.

Aside from the tripod head adjustment the only comparable function employed in roll film equipment is rise and fall of the front lens board, and this is rare indeed. Rather than elaborate on these movements here it will suffice to recommend the first few chapters of *View Camera Technique* by Leslie Stroebel for those interested in learning more about the operation of view cameras.

When attempting to photograph any mineral specimen which is not relatively flat or when the viewing angle is oblique to the best surface of the specimen (as in figure 3a), a view camera can always give the opportunity for a finer quality image. When approaching a specimen from an oblique angle, the view camera is moved into the desired viewing position. The following movements are then attempted to bring uniform focus across the specimen at full viewing aperture.

1) by using tilts and swings the plane of the lens board and the plane of the camera back are made to intersect the plane of the important surface of the specimen (as in figure 3b). The line of intersection in space would be common to all three planes. This process creates extreme depth of field within the main plane of subject interest.
2) the image is then brought to the center of the field by using the lateral and/or rise and fall movements of the lens or film plane. Care must be taken not to disturb the angular intersections brought about in step one.

This is but one use of the many combinations possible in view camera photography of minerals. There are as many other uses and needs as imagination and individual projects dictate.

Regarding the advantages of view cameras, a most obvious plus is in the area of photographic chemistry. Image contrast can be controlled by the Exposure-Development Method. This is one of the most basic and important concepts regarding contrast and the production of pre-determined contrast values on the negative. Excellent studies on this concept have been covered in *The Zone System Manual* by Minor White, and in a book titled *The Negative* by Ansel Adams. When using sheet film it is possible for each image to be separately controlled in this exposure-development cycle. Photochemicals have been developed to carry this control to very accurate levels. In using roll film it is indeed possible to expose each image just as you wish, however in development the control is lost because the entire roll is processed around a mean gradient of contrast. If that roll of film were to have exposures of brilliant metallic sulfides on some frames and delicate tonal specimens such as halides on other frames one could easily see where it would be impossible to do justice to both. *The differences in tonal gradation are subdued by the human eye, but exaggerated by the film itself,* so careful control is important.

In keeping with thoughts about film, there are two other advantageous aspects of the view camera. Changing film types with each shot is no more difficult than using the *same* film each time. You merely mark the holders and select any type of film you have previously prepared. Switching from color negative to black and white and on to color transparency film could be very difficult and wasteful with most roll film cameras. The final film advantage is the ability to use 4 x 5 inch Polaroid packets in place of regular sheet film via the Polaroid Back which is available for all 4 x 5 cameras using a universal back. There are many advantages in the use of Polaroid film, such as exposure and composition control. Pre-exposing on Type 55 P/N Polaroid sheet film will give a very good account of what one might expect when using Ektachrome sheet film and fortunately both have a speed of ASA 50. This technique is so effective as to make the use of a light meter almost obsolete. There is no simple way that a light meter can reveal as much as the thirty-second print from this pre-exposure. Light balance is very critical in mineral exposures because of the variety of surfaces one encounters; this is very easily diagnosed in the Polaroid print.

A factor one must always consider in photography is cost. As hinted earlier, the use of a view camera can be an expensive proposition. A 4 x 5-inch view camera can cost from $200 to more than $2000, and the price of a high-quality lens is usually over $180. A rigid tripod is necessary and can also be very expensive. Having expended the funds to purchase the equipment, one must then face the costs of film and film holders. A double sheet film holder costs $4.50; eventually you'll want 10 or more. Ektachrome sheet film costs around 70¢ a sheet and an additional 75¢ to have processed. This means that every click of the shutter represents nearly a dollar and a half. Polaroid Type 55 P/N black and white film costs around $14 for a package of 20 sheets. As you can see, view cameras are considerably more expensive to buy and operate than are 35mm cameras.

The intent of this article is not to sell view cameras. It is not to degrade roll film cameras. It is to enlighten the readers of this column to the functions and use of view cameras and hopefully, to bring about a greater understanding of the tools and techniques available to anyone interested in Mineral Photography.

Jeffrey J. Kurtzeman
3048 East Lupine Avenue
Phoenix, Arizona 85028
Wendell Wilson
8042 Bryant Avenue South
Bloomington, Minnesota 55420

Yedlin on Micromounting

When we pull a rock it's usually a good one. In the September — October issue of the *Mineralogical Record*, last year we stated in this column that the New Jersey Mineral Society was to be given plaudets for its gracious entertaining of its previous year's speakers at its annual banquet. It is the Newark Mineralogical Society, Inc., that affords this courtesy. The third oldest club in the country has always been progressive in its actions and ideas. How we made this error is beyond us, especially since we have been a guest at such affair on two separate occasions. We're both sorry and glad. Sorry to have made the error, and glad that we had the chance to mention the Newark Mineralogical Society again.

Our description of a pedestal mounting technique a couple of issues ago has elicited a couple or so of suggestions. George W. Shokal, of San Carlos, California, describes lining the base of the box with a wafer of model airplane wing balsa wood, cut to fit snugly. "Cut a hole in the wafer where the pedestal is to fit", he says. "Make it as close as you can to the shape and size of the cross section of the intended pedestal. Put a drop of your favorite glue into the hole, and insert the pedestal, leaving to dry. A bit of glue to the underside of the wafer, and insertion of the whole into the box complete the job, and you can send the micromount anywhere."

Peter Tarassoff, of Quebec, Canada, has other suggestions. We quote from his letter of December 31, 1973. "I solved the problem of loose pedestals by anchoring them with pins. I drill a hole through the bottom of the box and insert the snipped off tip of a straight pin (about a quarter inch length). The hole should be drilled to give a tight fit (a number 72 drill held in a pin vise does the trick). I roughen the surface at the base of the pin inside the box, put a dab of cement on the base of the balsa wood or cork pedestal, and push the pedestal down over the pin. For small single crystals I insert a longer pin and use this as the pedestal. I've never had any mounts come loose, and the system permits me to use narrow pedestals which give the mounts more of a 'floating in space' appearance."

In line with his second description, using a long pin as a pedestal, several collectors have suggested drilling, or melting with a hot brad or darning needle a hole in the bottom of the plastic box, inserting a round wooden toothpick through the hole to the proper height (Best to affix the specimen first.), applying a bit of cement to the point of joinder, and permitting the whole to dry. A razor blade to cut the toothpick flush with the bottom of the box completes the job. Very, very good. Every day we learn something.

Milton L. Speckels' book, *A Complete Guide to Micromounts* depicts most of these and other methods of mounting. It is available at a cost of two dollars from the *Lapidary Journal* Book Department, Post Office Box 80937, San Diego, California 92138. We suggest you get it, as well as Toni Galgano's *Micromounting for Everyone* issued by West Essex Mineral Club, Inc., Post Office Box 131, Verona, New Jersey 07044; the latter a dollar thirty-five, postpaid.

We've encountered another problem in mounting; the determination of the length of the pedestal. It is good procedure to have the top of the specimen flush with the top of the box. Normally this is no problem. Where crystals occur in a vug, or are so stout that they can withstand minor contact the method is to cement the specimen to a balsa stick, let dry, and then insert the stick, mineral first, into the box, slowly and carefully until you sense contact. Score the stick at the top of the box with a single edged razor blade, remove the specimen, and sever at the scored point at right angles to the "C" axis of the balsa (or anything else). Reverse, cement in and you have it.

However, this is not to be attempted with such things as unprotected wulfenite, cuprite (chalcotrichite), malachite, aurichalcite, natrolite and the like, for the human hand is not sensitive enough to control the delicate situation. We've ruined too many potential specimens not to know better.

Well, an "out of the blue" package arrived one day from Steve Cares, 18 Stingletary Lane, Sudbury, Massachusetts 01776 (from that area the Zip just HAD to be that number) and in it was a solution. Cares had built a cutter for just this situation and it works to perfection. It's really an adaptation of a carpenter's mitre box, using as a cutter an X-acto #35 saw, sold in all hobby shops. His sketch gives details.

We've just had a distressing report of the theft of a micromount collection. Mrs. Dorothy G. Darrow, 15 Lorraine Terrace, Boonton, New Jersey, supplied us with a list of over 450 specimens taken from her erstwhile home at 1708 Troy Hills Village. This was an old collection, in one inch square cardboard boxes, like those of the late John A. Grenzig of Brooklyn, New York. Some were in oblong

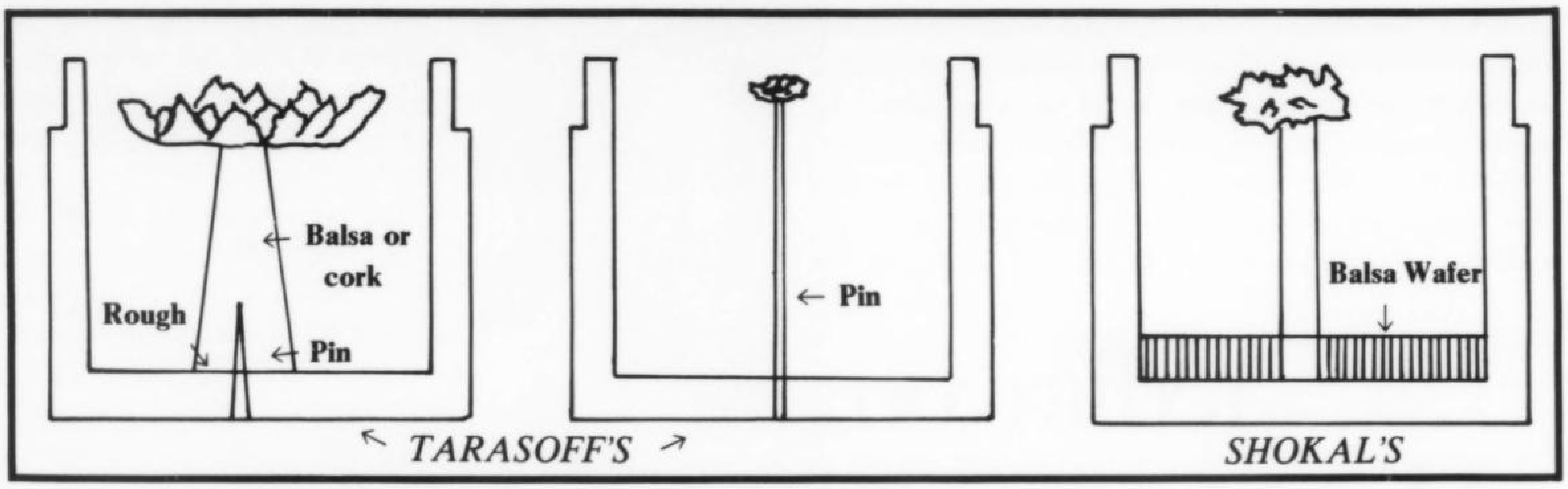

paper boxes of the time, and had the labels of Bement, Fiss, Rakestraw, Brinton and others. Truly this was a great loss. We cannot conceive of the value of the mounts to anyone. They may not be shown anywhere. They cannot be sold, for their recognition is too easy. And their value, intrinsically, isn't enough to interest even a casual thief. The age of the collection is evident, not only from the boxes but from the fact that some of the specimens were labeled calamine, octahedrite, lettsomite, specularite, etc. Incidently this was but half of a collection, as Mrs. Darrow and another obtained it jointly, and bisected the assemblage. Please be on your guard.

The Canadian Micro Mineral Association plans its Ninth Annual Workshop to be held on April 20 and 21, 1974. The place — Toronto, Ontario, at the Etobicoke Education Centre, at the junction of Highways 401 and 27 at the northwest edge of Toronto and at the adjacent Holiday Inn. If you are interested (and you should be) write Ross Anderson, 137 Buckingham Avenue, Toronto. Last year the meeting was held at the Royal Ontario Museum, but so great an attendance is anticipated that it was thought best to move to larger quarters. There will be speakers, workshops, slide shows, sales of micromounts and micromount material, as well as the usual "brag fests", exchanges of ideas, tools and minerals.

Russell P. McFall, 721 Foster Street, Evanston, Illinois 60201, visited the Michigan copper country last fall and came up with some interesting things, especially from the Allouez #1 mine, at Allouez. The list includes (in micros) copper, cuprite (chalcotrichite), analcime, natrolite, adularia and quartz in a red conglomerate felsite, so red that the zeolites were almost crimson in color. There were, too, flattened apophyllite, cuprite and copper in calcite, and in one case the cuprite needles (Cu_2O) had picked up some of the excess carbon dioxide in the calcite ($CaCO_3$), the embedded needles becoming malachite ($Cu_2(CO_3)(OH)_2$). Apparantly such minerals are quite available in the area, and this is also true in so many barren localities, where the collector of micromounts comes out with a profusion of specimens. We've never yet come away from a locality without something worth mounting. With one exception, that is. One hundred and fifty feet away from our home a road was cut through rock for a distance of two hundred yards. A tough, compact phyllite was exposed, and due search through the blasted rock disclosed nothing collectable for micromounts. The grass on the other side of the fence is definitely greener.

McFall uses plastic boxes, affixes an all-covering label on the cover, and then puts identical numbers on the bottom of the box and the inside of the cover, hidden by the outer label but easily seen and referred to when necessary. Thus the specimen and its identifying data need never become permanently separated.

Some time in December, 1973, we received a letter and a couple of packages from Alexander Kipfer, Uraniastrasse 16, CH 8001, Zurich, Switzerland. The first paragraph was in English, and stated that he was writing the rest in German. Our settling, over 20 years ago, in a college town paid off. We hied down to Yale and got one of the German students — a young German studying geology, not an American studying German — to translate. Done, and it was most interesting. Kipfer has just had published *Der Mikromounter*, and it is a fine publication (see review in *Mineralogical Record*, Volume III, Number 6, 1972, at page 276). The material Kipfer sent was outstanding. We've been partial to the minerals of Switzerland since first mount-

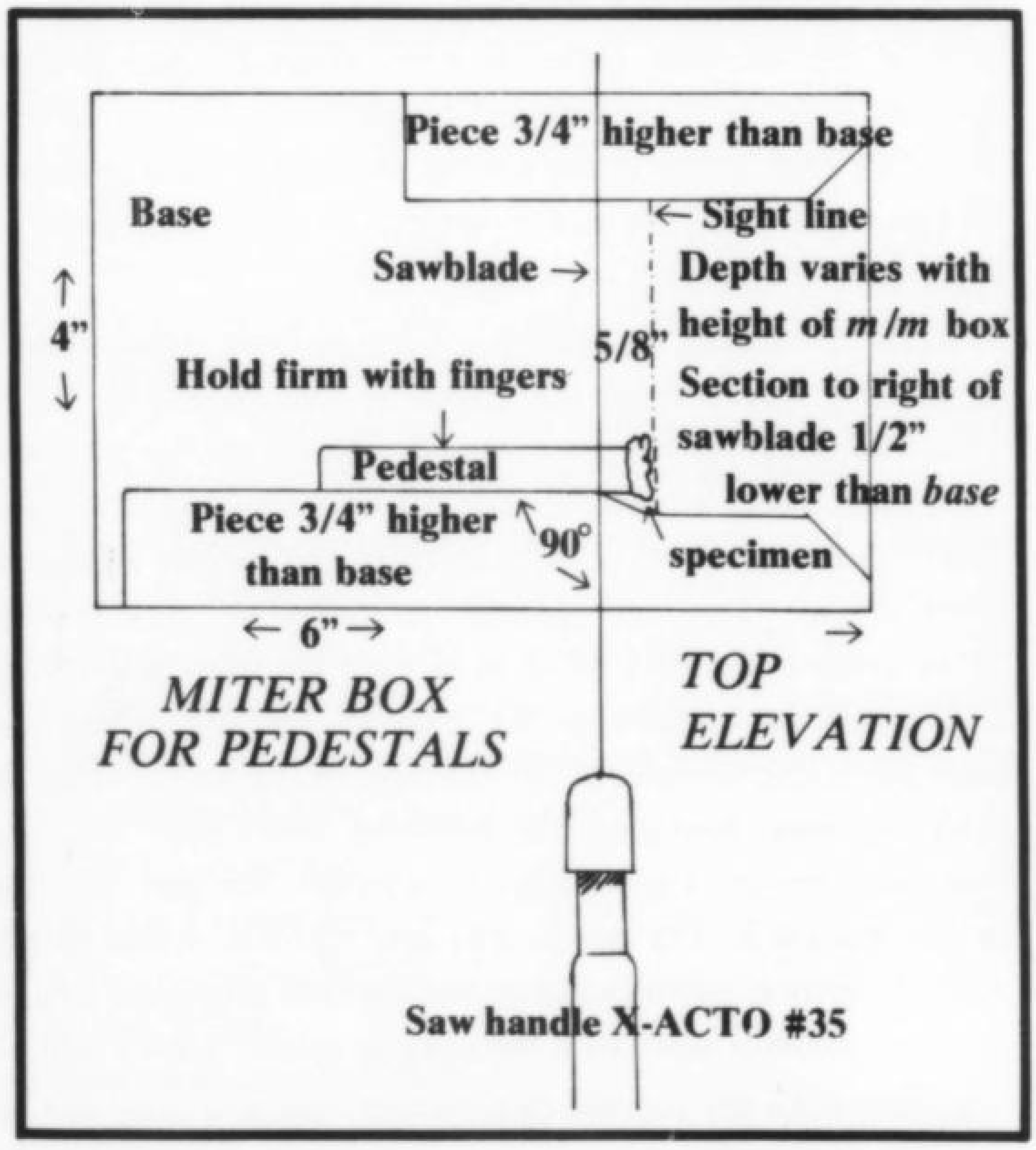

ing an anatase from micromount material obtained in 1946 at Hugh Ford's establishment in New York. Prior to that, when we collected cabinet specimens, we "latched on" to anything from Binnental, St. Gotthard, Tavetsch, etc., etc., and haunted the mineral store of John A. Grenzig, at 299 Adams Street, Brooklyn, New York (don't write, Grenzig passed on during W. W. II, his specimen stock was disbursed, and the micromount collection reposes, we believe, in the mineralogical archives of Dr. Alice Kraissl, 299 Williams Avenue, Hackensack, New Jersey 07601). Getting back to Kipfer, some of the things we got were fantastic. To name a few: gadolinite, pink fluorite, rutile on hematite in epitaxial growth, anatase, brookite, synchisite, monazite, apatite, epidote, milarite — oh, many more. Kipfer will exchange, but he has over 15,000 specimens, micro and cabinet sized, and includes 1170 described species in his collections. It's not easy to supply him with things he can use. But if you have two of something rare, unusual and well crystallized, you probably have a good deal in the making.

Buy and use a good mineral book, affix a complete label to your specimens, attend your microscope, and finally, get a supply of plastic micromount boxes. Few, if any, are being manufactured due to petrol shortage, and the collector who runs short may have to resort to paper.

Neal Yedlin
129 Englewood Drive
New Haven, Connecticut 06515

Thank You! for a very good first year
at our Laguna Beach gallery

KRISTALLE

Wayne & Dona Leicht

332 FOREST AVENUE, #20
LAGUNA BEACH, CALIF. 92651
(714) 494-7695

To the Editor

SPECIMENS TO MUSEUMS

Dear Sir:

Your last editorial (Vol. 4, #6) covered two subjects I heartily endorse. First, club support of local museums. The Huntsville Gem & Mineral Society has been responsible for over ten years for the Mineral Room at this city's Burritt Museum. During the past twelve months however we have developed a more active interest in the display and several months ago, as chairman of the committee working on this project, I proposed that the Society annually set aside a sum of money for the purchase of a better than average specimen for the Museum.

The second subject was your comment that the largest museums get the greatest number of calls for mineral specimens for serious study, and that it is possible the museums might be very appreciative of the receipt of specimens that some collectors might consider beneath the dignity of the Smithsonian, or the British Museum, or any of the others. I think you are very right in that last thought. Why not have the *MR* publish such lists of wants?

Dermid MacLean
Huntsville, Alabama

Unfortunately the wants are so extensive a list would be impossible. Ed.

THOU SHALT NOT...

Dear Sir:

With the increasingly close liaison between amateur and professional mineralogists it has become inevitable that the names of new minerals become known to amateurs soon after, and in some cases before, approval by the IMA Commission on New Minerals and Mineral Names. I would think that common courtesy would dictate that new mineral names should not be used in print before publication by those responsible for their identification and naming, and certainly not before approval by the Commission. I suggest that a note in the *Record* on the ground rules to be followed in this matter might forestall some problems in the future.

This letter was prompted by the planned publication by a group of amateurs of a descriptive booklet on the minerals of a certain locality which I understand would list several new minerals prior to their official publication.

P. Tarassoff
Dollard des Ormeaux, Quebec

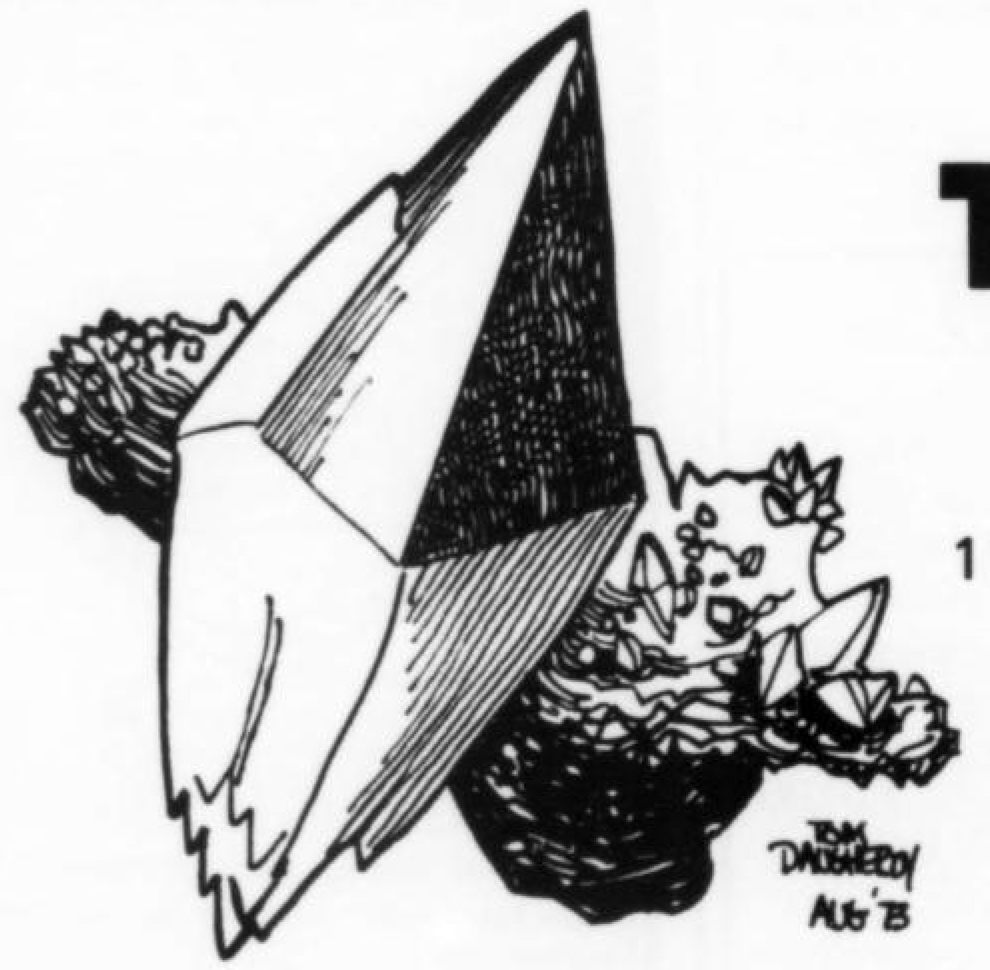

We endorse absolutely this letter. There is but one ground rule; the describer must be allowed to publish his description before others may use the name! Ed.

SOME CORRECTIONS

Dear Sir:

The recent inaccuracy about stokesite reminded me of a couple of other items I wanted to comment on earlier: so I will handle all three affairs in this letter.

Regarding stokesite (*Min. Record,* **4**, 6, p. 275); besides the Cornish type locality, there are at least two other places where stokesite was identified: Ctidružice and Věžná, in Western Moravia, Czechoslovakia. Descriptions of both occurrences were published in *Mineralogical Magazine*, London (**32**, 1961, p. 673, and **35**, 1966, p. 835, respectively). I also suggest there are some localities of stokesite in Africa and in the U.S.S.R., but maybe my memory fools me.

As to the locality *Mies* in Western Bohemia, Czechoslovakia (*Min. Record*, **4**, 4, p. 198); both Stribo and Stribno are misspelled, the correct Czech name is Stříbro (which means silver in English).

And finally, milarite (in the same issue, p. 184); the first Czechoslovak locality of milarite was Věžná, not Rožná, as quoted by N. Yedlin. The paragraph Mr. Yedlin devoted to milarite does not suggest he attempted to put together a complete list of localities of this species, so the following listing is not meant as a criticism of his several quotations: besides the localities given in his article, milarite occurs in two other pegmatites in Czechoslovakia, at Maršíkov and

LIDSTROMS
P. O. Box 518
Prineville, Ore. 97754
See us at:
Lincoln—June 13-16
San Mateo—June 28-30
San Francisco—August 10-11
Call us for an
appointment at home
(503-447-7104),
or visit our shop in
Carmel, California

Fine Mineral Specimens From Worldwide Localities

H. Obodda
P.O. Box 51
Short Hills, N.J. 07078
(201) 467-0212

DANIEL L. ERLING
1239 So. 49th Street
Milwaukee, Wisconsin 53214

ALLARGENTUM-Cobalt, Ontario
TN's to 4x7"-priced from 3.50 to 200.00
TELLURANTIMONY-Mattagami Lake mine, Matagami, Quebec
About 1x1"-3.00 each
WYLLIEITE-up to 10.00

OTHER UNUSUAL AND NEW SPECIES
OCCASIONAL LISTS OFFERED
BY APPOINTMENT ONLY
Tel: (414) 384-5729

Western Minerals

1260 E. Edison
Tucson, Arizona 85719
(602) 792-3925

"Minerals for Connoisseurs"

Fabulous Cuprites, malachite coated from S. W. Africa, 1/2 to 2" across.

PROSPER J. WILLIAMS
270 Sutherland Drive
Toronto, Ontario
Canada
M4G-1J3

PERI LITHON BOOKS

Our name means "About Stones" and that's why you will find hundreds of fascinating out-of-print rarities on minerals, geology, gems, etc. in each of our big, fully descriptive catalogs. Get latest copy now by sending 60¢ stamps, cash, or check, refundable on $10.00 order to **PERI LITHON BOOKS**, Box 9996, San Diego, California 92109.

CRYSTAL SHOWCASE
222 OAKWOOD RD.
ROCHESTER, N.Y. 14616
(716) 865-4465
QUALITY MINERALS BY MAIL

CRYSTAL SHOWCASE happily announces a change in policy to better serve you. We now pay all postage and insurance on all shipments within the U.S.

SOMETHING NEW!

DIOPTASE xls from Brazil. Sharp bright green xls on matrix. Xls are about 4 to 7 mm. Specimens 3 x 3 to 6 x 10 cm. Priced from **$6.00** to **$30.00.**

NEW FIND!

Gigantic **CUPRITE** xls from Africa. Surface altered to malachite. 1.5 to a 4 x 7 cm matrix specimen. Priced by size and quality. **$15.00** to **$325.00.**

PSEUDOMORPHS!

STRONTIANITE after **CELESTITE** xls. Wood Co., Ohio. Sharp xls on matrix. Thumbnails to cabinet size. **$2.00** to **$20.00.**

FINE XL GROUPS!

STIBNITE xls from Roumania. Groups of stout terminated xls. 2.5 x 5 cm to 5 cm x 9 cm. **$30.00** to **$260.00.**

RARE!

WOODHOUSEITE xls from Calif. Sharp xls on a quartz matrix, not showy. 5 x 5 cm to 8 x 8 cm **$12.00** to **$18.00.**

Any item maybe returned within 10 days for refund. Are you on our mailing list yet?

Radkovice; at Hamburg and Tittling in Germany; in the Grorud district and in the Nedre Lapplaegret pegmatite in Norway; at Linkinhorne, Cornwall, and at Meldon, Devonshire, in England; at Kings Mountain, N. C.; and at least four localities in the U.S.S.R.—in central Kazakhstan, Kola Peninsula, Central Asia, and Eastern Siberia. Finally, the last list of Swiss localities I know about is that given by Drs. T. Hügi and D. Rowe in *Beitrage zur Geologie der Schweiz*, No. 52, 1970, and there are twenty-five of them! All this mainly to show that milarite may be considered today a rather widespread mineral, definitely out of rank of rare species known from just a few localities around the world.

Dr. Petr Černý
Winnipeg, Canada

GIANT STEP BACKWARD

The following appeared in the February 1974 *Lapidary Journal*...

"The basic need of a rock collection is primarily to have something unusual and interesting and then display it in the most attractive, eye-catching, manner. The best way to do it is to present each piece unadorned and exactly as we found it. To stand on its own merits. That is what attracted us to it in the first place. Labels, notes or other information, however informative, can add nothing to the natural beauty of rocks, crystals or gemstones. Nor does it help, or benefit, the visitor to read a word or a name with which he can neither identify nor understand."

Why didn't we think of that!

SELLING BRISKLY!!

"Volume II, Gem and Mineral Localities of Southeastern United States", by Field Geologist Dr. Leon D. Willman. All different localities from Volume I, precisely pinpointed. Over 250 pages, 8 1/2 by 11 inches, 3/4 inches thick! 2,694 gem and mineral localities, 29 information-packed maps. $8.00 Check or Money Order. Dr. Leon D. Willman, 1006 Pine Drive, Dept. MR, Jacksonville, Alabama, 36265. Volume I, same title, 97 pages, 6 maps, 5 1/2 by 8 1/2 inches, still available, $3.00.

RICHARD A. KOSNAR
"MINERAL CLASSICS"

•

Fine Mineral Specimens
from Classic and
Contemporary Localities for
Advanced Collectors
and Museums

•

(Wholesale lots available
to dealers)

•

Mineral lists not available.
Special requests and
desiderata invited.

11260 E. CENTER
AURORA, COLORADO 80010
(303) 366-0092

Dyck's Minerals
95-719 Kipapa Drive No. 37
Mililani, Hawaii 96789
(808) 623-2322
Lists 25¢

WANTED TO BUY
Single crystals of various sizes and Micromount material. Please send sample and quote price in first letter.
DAVID NEW
P. O. Box 38
Stevensville, Montana 59870
(406) 777-3468

Brazilian Minerals
Specializing in Pegmatite Specimens
Colorado Gem & Mineral Co.
Post Office Box 424
Tempe, Arizona 85281
Jack Lowell (602) 966-6626

Subscribe Today the Mineralogical Record

bentley's minerals

Distinctive specimens—
for museums and collectors
Write: P.O. Box 366
Windsor, Connecticut 06095
Telephone—(203) 688-1627

FINE MINERAL SPECIMENS

We specialize in old Bisbee, Tiger and other Arizona material. Also crystals and crystal groups from all over the world. We also handle rare minerals, domestic and foreign. Azurite, wulfenite, anglesite, native copper, brochantite and many others available. Send us your wants, sizes, price range, etc.

BIDEAUX MINERALS
Telephone 624-2132
111 W. WASHINGTON ST.,
TUCSON, ARIZONA

AUGUST 18 & 19—UPPER MONTCLAIR, NEW JERSEY

New Jersey has the most! Franklin has more different minerals than any other spot on earth—with more being identified as work continues—and the list for the rest of the state is impressive indeed. The clubs of the state have combined to form the New Jersey Earth Science Association and will present their minerals, dinosaur tracks, lapidary work etc., at their first annual show at Montclair State College in beautiful, spacious air-conditioned facilities atop the famous Watchung Ridge—source of fabulous Paterson zeolites. Fine speakers and informative displays will be featured. Swappers will have a field day and dealers will entice with exotic specimens and glittering gems. Come, and bring the kids—they'll love it.

Chairman Vincent Rizzo
28D Riverview Gardens
N. Arlington, N. J. 07032

MEMBER OF *RECORD* EDITORIAL BOARD HAS NEW MINERAL NAMED IN HIS HONOR

Peter G. Embrey, mineralogist of the British Museum (Natural History) and a member of the Editorial Board of the *Mineralogical Record*, has just had a new mineral species named in his honor. The mineral, embreyite, is a lead chromate-phosphate hydrate found with such familiar lead and chromium minerals as crocoite, vauguelinite and phoenicochroite on specimens collected long ago at Beresov in Siberia. It is dull orange in color and occurs as botryoidal crusts with a drusy crystalling surface. It has been found on at least a dozen specimens from old collections and may turn up on many more once collectors begin looking more carefully for it.

The description of embreyite was written by Sidney A. Williams, a mineralogist with the Phelps Dodge Corporation, Douglas, Arizona, and was published in Mineralogical Magazine, Volume 38, page 790, 1972.

JUNIOR GROUPS...
HOW TO INTEREST THEM

It is heartening to see at least one mineral club care enough about young beginning collectors to devise and carry out an imaginative program for them. According to their bulletin Rock Talk, here is what the Tucson Gem and Mineral Society is doing for its juniors (known as Explorers):

The Explorers are divided into three groups, Copper, Silver and Gold. At the beginning all are considered to be in the Copper group and advancement to the other groups must be earned through satisfying these requirements...

1. Assemble a collection of 20 minerals gathered on field trips properly identified and labeled, and arranged according to one of the classification systems (such as Dana's).
2. Choose any 5 minerals and explain the physical and chemical tests, and their results, which led to their identification.
3. Answer questions such as: What is a mineral? What is a rock? What are the three main types of rocks? What are the mineral classes? Name the crystal classes and give examples of mineral in each. Repeat the hardness scale.
4. Demonstrate hardness tests, cleavage. Make a blowpipe flame and identify its parts and what they are used for. Form a bead and explain its use.

Congratulations to the Tucson group for setting an inspiring example!

WHO ARE MY CUSTOMERS?

No fair naming names, but—I seem to get a healthy cross-section of the top mineral-wise collectors who really know their minerals and are looking for just that unusual crystal or crystals or mineral formation that is "out of this world" and will be one of the choicest, or among the choicest, in an already fine accumulation. These collectors are aware of the great scarcity of choice specimens, the increasing demand for them, and generally they buy quickly because they know, come tomorrow, someone else may have bought it. These customers need little or no guidance from me—they are fully "aware."

I also get a considerable number of collectors who generally have been satisfied with medium quality specimens but who have slowly realized that what they now own gives them less satisfaction than it should. They want to "improve" and usually "shop" a little before they come to me. However, once they get the "taste" of quality I merely make a few suggestions because I really don't "sell," I merely *present.*

A satisfying number of investor-collectors also find their way to me. Usually, they have heard about me through "word-of-mouth" as a reliable dealer or perhaps have seen one of my ads somewhere or enjoyed my fine mineral displays at a show. These collectors often ask for guidance and I am always glad to advise. I enjoy helping to build important collections where money is "no object" and take pride when I can point to healthy increases in the values of specimens they have acquired from me.

I also am visited by a goodly number of relative newcomers who have come to love minerals and have heard about the fine specimens I have to offer. I welcome them, as I welcome everyone, and surprisingly many become regular customers. That pleases me, too, for after all, after affording me a decent living, minerals are my life.

If you care to know more about the materials I offer, drop me a line. I may have something for you, too.

* * *

Lawrence H. Conklin

Mineralogist

Office and Showroom
2 West 46th Street
New York, N. Y., 10036
(212)757-2264

P.O. Box 61
New Canaan, Conn., 06840
(203)966-5215

(Price Lists Available)