Engineering Polymers

General Design Principles for DuPont Engineering Polymers

Module I

Start
with DuPont
Engineering Polymers

General Design Principles for DuPont Engineering Polymers

Table of Contents

1 – General

Introduction

This section is to be used in conjunction with the product data for specific DuPont Engineering Thermoplastic resins – DELRIN® acetal resins, ZYTEL® nylon resins including glass reinforced, MINLON® engineering thermoplastic resins and CRASTIN® (PBT) and RYNITE® (PET) thermoplastic polyester resins. Designers new to plastics design must consider carefully the aspects of plastic properties which differ from those of metals: specifically, the effect of environment on properties, and the effect of long term loading.

Property data for plastics are obtained from physical tests run under laboratory conditions, and are presented in a similar manner as for metals. Test samples are moulded in a highly polished mould cavity under optimum moulding conditions. Tests are run under ASTM and/or ISO conditions at prescribed tensile rates, moisture levels, temperatures, etc. The values shown are representative, and, it should be recognized that the plastic part being designed will not be moulded or stressed exactly as the test samples.

The following aspects affect, for instance, the strength and toughness of a plastic part:

- Part thickness and shape
- Rate and duration of load
- Direction of fibre orientation
- Weld lines
- Surface defects
- Moulding parameters

The designer must also have information regarding the effect of heat, moisture, sunlight, chemicals and stress.

In plastic design, therefore, it is important to understand the application thoroughly, use reference information which most closely parallels the application, prototype the part and test it in the end-use application.

The purpose of the DuPont Handbook is to provide the designer with the information necessary to create good designs with the best materials in terms of factors, such as: environment, process, design and end use effects. The objective is to obtain a cost effective and functional part design that can be achieved in the shortest possible time.

This information allows parts to be designed with a minimum weight and, at the same time, with a maximum of possibilities for disassembly and recycling, so that the impact on the environment can be reduced.

A good design reduces the processing cost, assembly cost, production waste in the form of rejects parts, sprues and runners and end-use waste of the whole device produced, through avoidance of early failure of the device.

® DuPont registered trademark

Defining the End-Use Requirements

The most important first step in designing a plastic part is to define properly and completely the environment in which the part will operate. Properties of plastic materials are substantially altered by temperature changes, chemicals and applied stress. These environmental effects must be defined on the basis of both short and long term, depending of course on the application. Time under stress and environment is all-important in determining the extent to which properties, and thus the performance of the part will be affected. If a part is to be subject to temperature changes in the end-use, it is not enough to define the maximum temperature to which the part will be exposed. The total time the part will be at that temperature during the design life of the device must also be calculated. The same applies to stress resulting from the applied load. If the stress is applied intermittently, the time it is applied and the frequency of occurrence is very important. Plastic materials are subject to creep under applied stress and the creep rate is accelerated with increasing temperature. If loading is intermittent, the plastic part will recover to some extent, depending upon the stress level, the duration of time the stress is applied, the length of time the stress is removed or reduced, and the temperature during each time period. The effect of chemicals, lubricants, etc, is likewise time and stress dependent. Some materials may not be affected in the unstressed state, but will stress crack when stressed and exposed to the same reagent over a period of time. DuPont engineering thermoplastic resins are particularly resistant to this phenomena.

The following checklist can be used as a guide.

Design Check List

Part Name _____

Company _____

Print No. _____

Job No. _____

A. PART FUNCTION _____

_____

B. OPERATING CONDITIONS

	NORMAL	MAX.	MIN.
Operating temperature	_____	_____	_____
Service life (HRS)	_____	_____	_____
Applied load (N, Torque, etc., – describe fully on reverse side)	_____	_____	_____
Time on	_____	_____	_____
Duration of load			
Time off	_____	_____	_____

Other (Impact, Shock, Stall, etc.) _____

_____

C. ENVIRONMENT Chemical _____ Moisture _____

Ambient temp. while device not operating _____ Sunlight direct _____ Indirect _____

Waste disposal dispositions _____ Production waste _____ End-use waste _____

D. DESIGN REQUIREMENTS

Factor of safety _____ Max. deflection/Sag _____

Tolerances _____ Assembly method _____

Finish / Decorating _____ Agency / Code approvals _____

Disassembly after service life _____ Recyclability _____

E. PERFORMANCE TESTING – If there is an existing performance specification for the part and/or device, include copy. If not, describe any known requirements not covered above

_____

_____

F. APPROVALS Regulation _____ Classification _____

Food, automotive, military, aerospace, electrical _____

G. OTHER

Describe here and on the reverse side, any additional information which will assist in understanding completely the function of the part, the conditions under which it must operate and the mechanical and environmental stresses and abuse the part must withstand. Also add any comments which will help to clarify the above information

_____

_____

_____

Prototyping the Design

In order to move a part from the design stage to commercial reality, it is usually necessary to build prototype parts for testing and modification. The preferred method for making prototypes is to simulate as closely as practical the same process by which the parts will be made in commercial production. Most engineering plastic parts are made in commercial production via the injection moulding process, thus, the prototypes should be made using a single cavity prototype mould or a test cavity mounted in the production mould base. The reasons for this are sound, and it is important that they be clearly understood.
The discussion that follows will describe the various methods used for making prototypes, together with their advantages and disadvantages.

Machining from Rod or Slab Stock

This method is commonly used where the design is very tentative and a small number of prototypes are required, and where relatively simple part geometry is involved. Machining of complex shapes, particularly where more than one prototype is required, can be very expensive. Machined parts can be used to assist in developing a more firm design, or even for limited testing, but should never be used for final evaluation prior to commercialization.

The reasons are as follows:

- Properties such as strength, toughness and elongation may be lower than that of the moulded part because of machine tool marks on the sample part.
- Strength and stiffness properties may be higher than the moulded part due to the higher degree of crystallinity found in rod or slab stock.
- If fibre reinforced resin is required, the important effects of fibre orientation can be totally misleading.
- Surface characteristics such as knockout pin marks, gate marks and the amorphous surface structure found in moulded parts will not be represented in the machined part.
- The effect of weld and knit lines in moulded parts can-not be studied.
- Dimensional stability may be misleading due to gross differences in internal stresses.
- Voids commonly found in the centre of rod and slab stock can reduce part strength. By the same token, the effect of voids sometimes present in heavy sections of a moulded part cannot be evaluated.
- There is a limited selection of resins available in rod or slab stock.

Die Casting Tool

If a die casting tool exists, it can usually be modified for injection moulding of prototypes. Use of such a tool may eliminate the need for a prototype tool and provide a number of parts for preliminary testing at low cost. However, this method may be of limited value since the tool was designed for die cast metal, not for plastics. Therefore, the walls and ribbing will not be optimized; gates are usually oversized and poorly located for plastics moulding; and finally the mould is not equipped for cooling plastic parts. Commercialization should always be preceded by testing of injection moulded parts designed around the material of choice.

Prototype Tool

Prototype moulds made of easy-to-machine or cheap materials like aluminium, brass, kirksite, etc. can produce parts useful for non-functional prototypes. As the right moulding conditions demanded by the material and the part geometry cannot be employed in most cases (mould temperature and pressure especially), such low-cost moulds cannot produce parts that could be evaluated under operational conditions.

Preproduction Tool

The best approach for design developments of precision parts is the construction of a steel preproduction tool. This can be a single cavity mould, or a single cavity in a multi-cavity mould base. The cavity will have been machine finished but not hardened, and therefore some alterations can still be made. It will have the same cooling as the production tool so that any problems related to warpage and shrinkage can be studied. With the proper knockout pins, the mould can be cycled as though on a production line so that cycle times can be established. And most important, these parts can be tested for strength, impact, abrasion and other physical properties, as well as in the actual or simulated end-use environment.

Testing the Design

Every design should be thoroughly tested while still in the prototype stage. Early detection of design flaws or faulty assumptions will save time, labour, and material.

- Actual end-use testing is the best of the prototype part. All performance requirements are encountered here, and a completed evaluation of the design can be made.
- Simulated service tests can be carried out. The value of such tests depends on how closely end-use conditions are duplicated. For example, an automobile engine part might be given temperature, vibration and hydrocarbon resistance tests; a luggage fixture might be subjected to abrasion and impact tests; and an electronics component might undergo tests for electrical and thermal insulation.
- Field testing is indispensible. However, long term field or end-use testing to evaluate the important effects of time under load and at temperature is sometimes impractical or uneconomical. Accelerated test programs permit long-term performance predictions based upon short term ‘‘severe’’ tests; but discretion is necessary. The relationship between long vs short term accelerated testing is not always known. Your DuPont representative should always be consulted when accelerated testing is contemplated.

Writing Meaningful Specifications

A specification is intended to satisfy functional, aesthetic and economic requirements by controlling variations in the final product. The part must meet the complete set of requirements as prescribed in the specifications.

The designers’ specifications should include:

- Material brand name and grade, and generic name (e.g. ZYTEL® 101, 66 nylon)
- Surface finish
- Parting line location desired
- Flash limitations
- Permissible gating and weld line areas (away from critical stress points)
- Locations where voids are intolerable
- Allowable warpage
- Tolerances
- Colour
- Decorating considerations and
- Performance considerations

2 – Injection Moulding

The Process and Equipment

Because most engineering thermoplastic parts are fabricated by injection moulding, it is important for the designer to understand the moulding process, its capabilities and its limitations.

The basic process is very simple. Thermoplastic resins such as DELRIN® acetal resins, CRASTIN® and RYNITE® thermoplastic polyester resins, or ZYTEL® nylon resins, supplied in pellet form, are dried when necessary, melted, injected into a mould under pressure and allowed to cool. The mould is then opened, the parts removed, the mould closed and the cycle is repeated.

Fig. 2.01 is a schematic of the injection moulding machine.

Fig. 2.02 is a schematic cross section of the plastifying cylinder and mould.

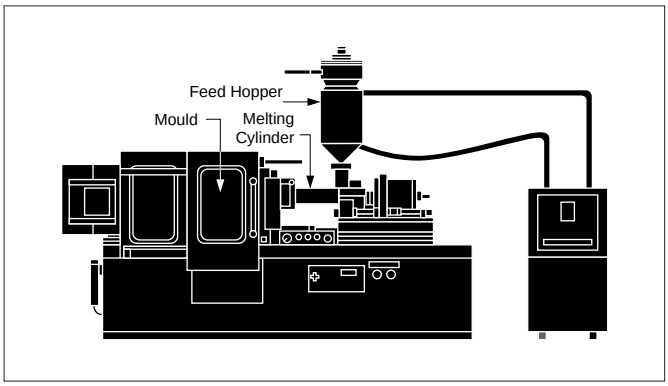

Fig. 2.01

The Moulding Machine

Melting the plastic and injecting it into the mould are the functions of the plastifying and injection system. The rate of injection and the pressure achieved in the mould are controlled by the machine hydraulic system. Injection pressures range from 35-140 MPa. Melt temperatures used vary from a low of about 215°C for DELRIN® acetal resins to a high of about 300°C for some of the glass reinforced ZYTEL® nylon and RYNITE® polyester resins.

Processing conditions, techniques and materials of construction for moulding DuPont Engineering Thermoplastic Resins can be found in the Moulding Guides available for DELRIN® acetal resins, MINLON® engineering thermoplastic resins, CRASTIN® and RYNITE® thermoplastic polyester resins and ZYTEL® nylon resins.

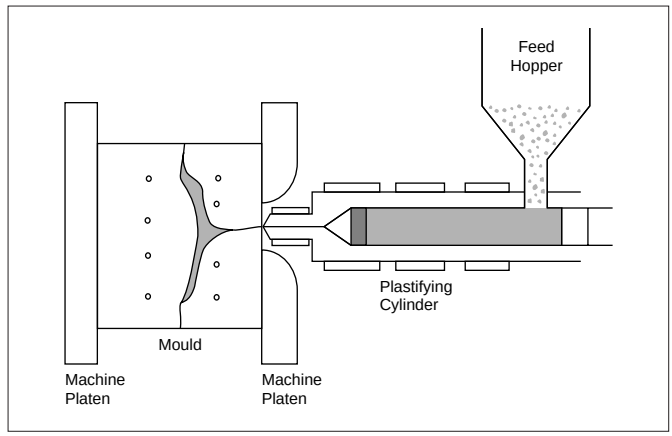

Fig. 2.02

The Mould

Mould design is critical to the quality and economics of the injection moulded part. Part appearance, strength, toughness, size, shape, and cost are all dependent on the quality of the mould. Key considerations for Engineering Thermoplastics are:

- Proper design for strength to withstand the high pressure involved.
- Correct materials of construction, especially when reinforced resins are used.
- Properly designed flow paths to convey the resin to the correct location in the part.
- Proper venting of air ahead of the resin entering the mould.
- Carefully designed heat transfer to control the cooling and solidification of the mouldings.
- Easy and uniform ejection of the moulded parts.

When designing the part, consideration should be given to the effect of gate location and thickness variations upon flow, shrinkage, warpage, cooling, venting, etc. as discussed in subsequent sections. Your DuPont representative will be glad to assist with processing information or mould design suggestions.

The overall moulding cycle can be as short as two seconds or as long as several minutes, with one part to several dozen ejected each time the mould opens. The cycle time can be limited by the heat transfer capabilities of the mould, except when machine dry cycle or plastifying capabilities are limiting.

Trouble shooting

In case moulded parts do not meet specifications, the reasons need to be detected. Table 2 shows a list of basic solutions to general moulding problems.

For more details contact DuPont's Technical Service.

Trouble shooting guide for moulding problems

Problem	Suggested Corrective Action(s)
Short shots, poor surface finish	1. Increase feed. 2. Increase injection pressure. 3. Use maximum ram speed. 4. Decrease cushion. 5. Raise material temperature by raising barrel temperature. 6. Raise mould temperature. 7. Increase overall cycle. 8. Check shot size vs. rated machine shot capacity; if shot size exceeds 75% of rated (styrene) shot capacity, move to larger machine. 9. Increase size of sprue and/or runners and/or gates.
Flashing	1. Lower material temperature by lowering barrel temperature. 2. Decrease injection pressure. 3. Decrease overall cycle. 4. Decrease plunger forward time. 5. Check mould closure (possible obstruction on parting line surface). 6. Improve mould venting. 7. Check press platens for parallelism. 8. Move mould to larger (clamp) press.
Nozzle drool	1. Lower nozzle temperature. 2. Lower material temperature by lowering barrel temperature. 3. Decrease residual pressure in barrel by: a) reducing plunger forward time and/or back pressure; b) increasing ‘decompress’ time (if press has this control). 4. Decrease die open time. 5. Use nozzle with positive shut-off valve.
Nozzle freeze-off	1. Raise nozzle temperature. 2. Decrease cycle time. 3. Increase injection pressure. 4. Raise mould temperature. 5. Use nozzle with larger orifice.
Discolouration	1. Purge heating cylinder. 2. Lower material temperature by lowering barrel temperature. 3. Lower nozzle temperature. 4. Shorten overall cycle. 5. Check hopper and feed zone for contaminants. 6. Check barrel and plunger or screw fit for excessive clearance. 7. Provide additional vents in mould. 8. Move mould to smaller shot size press.

Trouble shooting guide for moulding problems (continued)

Problem	Suggested Corrective Action(s)
Burn marks	1. Decrease plunger speed. 2. Decrease injection pressure. 3. Improve venting in mould cavity. 4. Change gate location to alter flow pattern.
Brittleness	1. Pre-dry material. 2. Lower melt temperature and/ or residence time. 3. Raise mould temperature. 4. Reduce amount of regrind.
Sticking in cavities	1. Decrease injection pressure. 2. Decrease plunger forward time, packing time/pressure. 3. Increase mould closed time. 4. Lower mould temperature. 5. Decrease barrel and nozzle temperature. 6. Check mould for undercuts and/or insufficient draft. 7. Use external lubricants.
Sticking in sprue bushing	1. Decrease injection pressure. 2. Decrease plunger forward time, packing time/pressure. 3. Increase mould closed time. 4. Increase mould temperature at sprue bushing. 5. Raise nozzle temperature. 6. Check sizes and alignments of holes in nozzle and sprue bushing (hole in sprue bushing must be larger). 7. Provide more effective sprue puller.

Problem	Suggested Corrective Action(s)
Weld lines	1. Increase injection pressure. 2. Increase packing time/pressure. 3. Raise mould temperature. 4. Raise material temperature. 5. Vent the cavity in the weld area. 6. Provide an overflow well adjacent to the weld area. 7. Change gate location to alter flow pattern.
Sinks and/or voids	1. Increase injection pressure. 2. Increase packing time/pressure. 3. Use maximum ram speed. 4. Raise mould temperature (voids). 5. Lower mould temperature (sinks). 6. Decrease cushion. 7. Increase size of sprue and/ or runners and/or gates. 8. Relocate gates nearer thick sections.
Warpage/ part distortion	1. Raise tool temperature, uniform? 2. Increase gate and runner size. 3. Increase fill speed. 4. Increase injection pressure and packing time/pressure. 5. Check flow path and relocate gate position and/or amend part design.

Trouble shooting guide for moulding problems (continued)

Problem	Suggested Corrective Action(s)
Poor dimensional control	1. Set uniform cycle times. 2. Maintain uniform feed and cushion from cycle to cycle. 3. Fill mould as rapidly as possible. 4. Check machine hydraulic and electrical systems for erratic performance. 5. Increase gate size. 6. Balance cavities for uniform flow. 7. Reduce number of cavities.

3 – Moulding Considerations

Uniform Walls

Uniform wall thickness in plastic part design is critical. Non-uniform wall thickness can cause serious warpage and dimensional control problems. If greater strength or stiffness is required, it is more economical to use ribs than increase wall thickness. In parts requiring good surface appearance, ribs should be avoided as sink marks on the opposite surface will surely appear. If ribbing is necessary on such a part, the sink mark is often hidden by some design detail on the surface of the part where the sink mark appears, such as an opposing rib, textured surface, etc.

Even when uniform wall thickness is intended, attention to detail must be exercised to avoid inadvertent heavy sections, which can not only cause sink marks, but also voids and non-uniform shrinkage. For example, a simple structural angle (Fig. 3.01) with a sharp outside corner and a properly filleted inside corner could present problems due to the increased wall thickness at the corner. To achieve uniform wall thickness use an external radius as shown in Fig. 3.02.

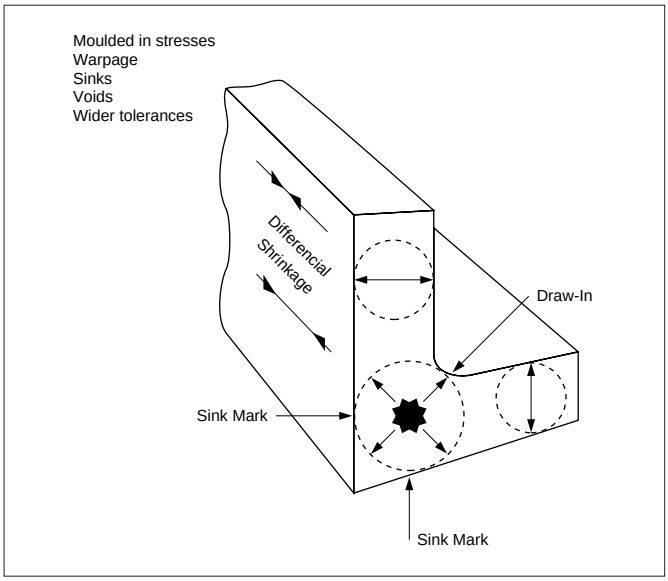

Fig. 3.01 **Effects of non-uniform wall thickness on moulded parts**

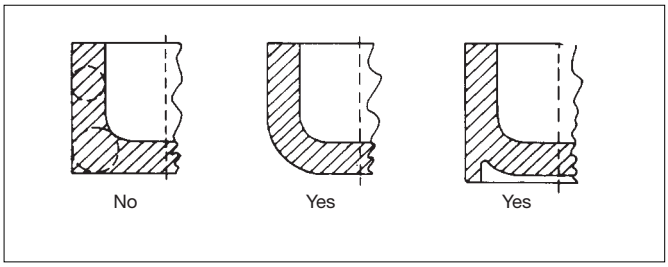

Fig. 3.02 **Outside corner design**

Configurations

Other methods for designing uniform wall thickness are shown in Fig. 3.03 and 3.04. Obviously there are many options available to the design engineer to avoid potential problems. Coring is another method used to attain uniform wall thickness. Fig. 3.04 shows how coring improves the design. Where different wall thicknesses cannot be avoided, the designer should effect a gradual transition from one thickness to another as abrupt changes tend to increase the stress locally. Further, if possible, the mould should be gated at the heavier section to insure proper packing (Fig. 3.05).

As a general rule, use the minimum wall thickness that will provide satisfactory end-use performance of the part. Thin wall sections solidify (cool) faster than thick sections. Fig. 3.06 shows the effect of wall thickness on production rate.

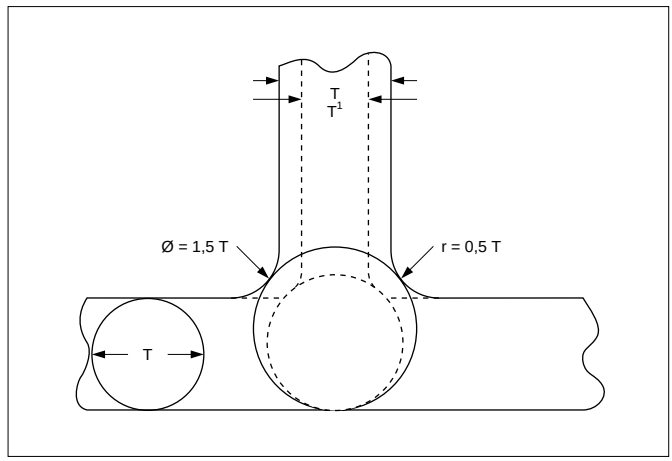

Fig. 3.03 **Rib dimensions**

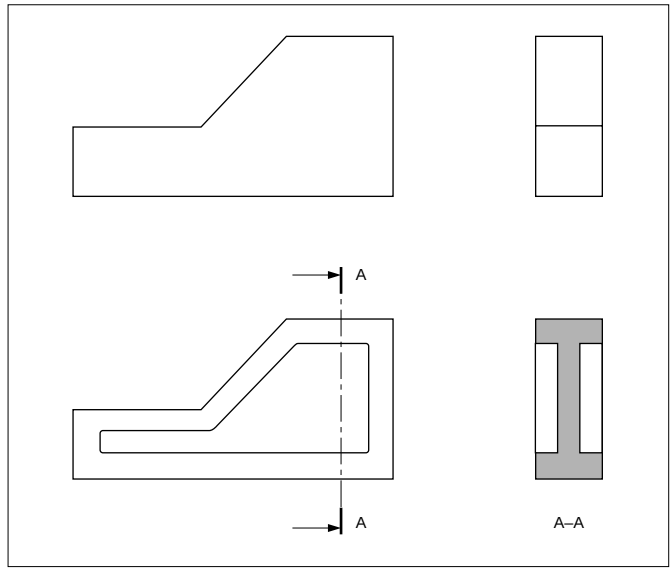

Fig. 3.04 **Design for uniform wall thickness**

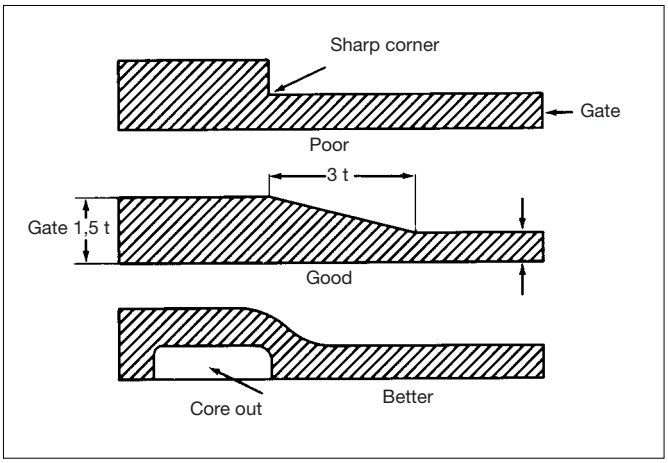

Fig. 3.05 **Wall Thickness Transition**

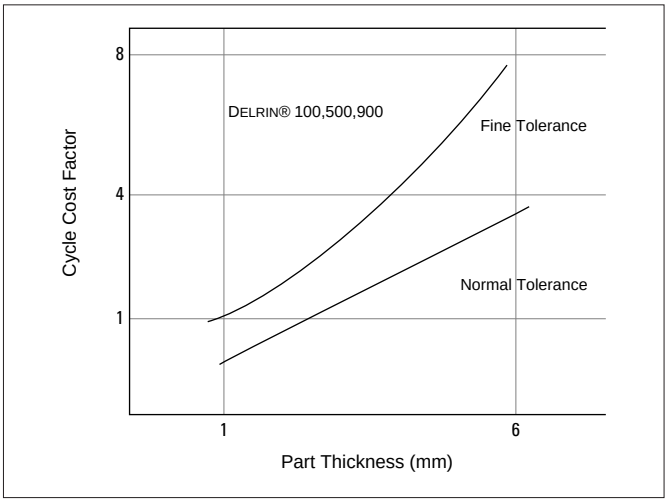

Fig. 3.06 **Cycle cost factor vs. part thickness**

Draft and Knock-Out Pins

Draft is essential to the ejection of the parts from the mould. Where minimum draft is desired, good draw polishing will aid ejection of the parts from the mould. Use the following table as a general guide.

Table 3.01 Draft Angle*

	Shallow Draw (Less Than 25 mm Deep)	Deep Draw (Greater Than 25 mm Deep)
CRASTIN® PBT	0 – ¼°	½°
DELRIN®	0 – ¼°	½°
ZYTEL®	0 – ⅛°	¼° – ½°
Reinforced Nylons	¼° – ½°	½° – 1°
Reinforced PBT	½°	½° – 1°
RYNITE® PET	½°	½° – 1°

* Smooth luster finish for textured surface add 1° draft per 0,025 mm depth of texture.

When knock-out pins are used in removing parts from the mould, pin placement is important to prevent part distortion during ejection. Also an adequate pin surface area is needed to prevent puncturing, distorting or marking the parts. In some cases stripper plates or rings are necessary to supplement or replace pins.

Fillets and Radii

Sharp internal corners and notches are perhaps the leading cause of failure of plastic parts. This is due to the abrupt rise in stress at sharp corners and is a function of the specific geometry of the part and the sharpness of the corner or notch. The majority of plastics are notch sensitive and the increased stress at the notch, called the ‘‘Notch Effect’’, results in crack initiation. To assure that a specific part design is within safe stress limits, stress concentration factors can be computed for all corner areas. Formulas for specific shapes can be found in reference books on stress analysis. An example showing the stress concentration factors involved at the corner of a cantilevered beam is shown in Fig. 3.07.

It is from this plot that the general rule for fillet size is obtained: i.e., fillet radius should equal one-half the wall thickness of the part. As can be seen in the plot, very little further reduction in stress concentration is obtained by using a larger radius.

From a moulding standpoint, smooth radii, rather than sharp corners, provide streamlined mould flow paths and result in easier ejection of parts. The radii also give added life to the mould by reducing cavitation in the metal. The minimum recommended radius for corners is 0,5 mm and is usually permissible even where a sharp edge is required (Fig. 3.08)

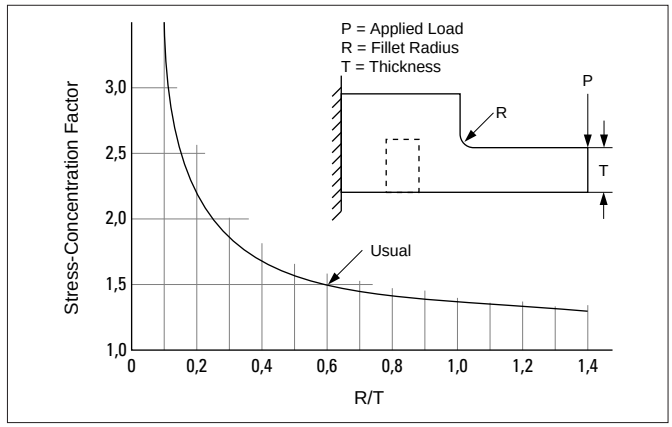

Fig. 3.07 **Stress concentration factors for a cantilevered structure**

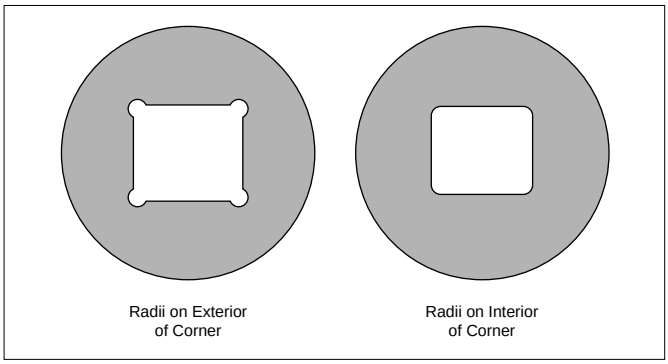

Fig. 3.08 **Use of exterior or interior Radii**

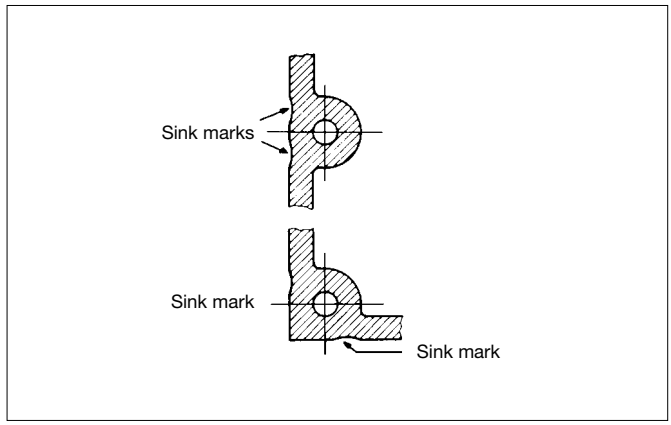

Fig. 3.10 **Less good boss design**

Bosses

Bosses are used for mounting purposes or to serve as reinforcement around holes. Good design is shown in Fig. 3.09.

As a rule, the outside diameter of a boss should be 2 to 2½ times the hole diameter to ensure adequate strength. The same principles used in designing ribs pertain to designing bosses, that is, heavy sections should be avoided to prevent the formation of voids or sink marks and cycle time penalty.

Less good design of bosses can lead to sink marks (or even voids), see Fig. 3.10.

Weldlines in bosses should be avoided.

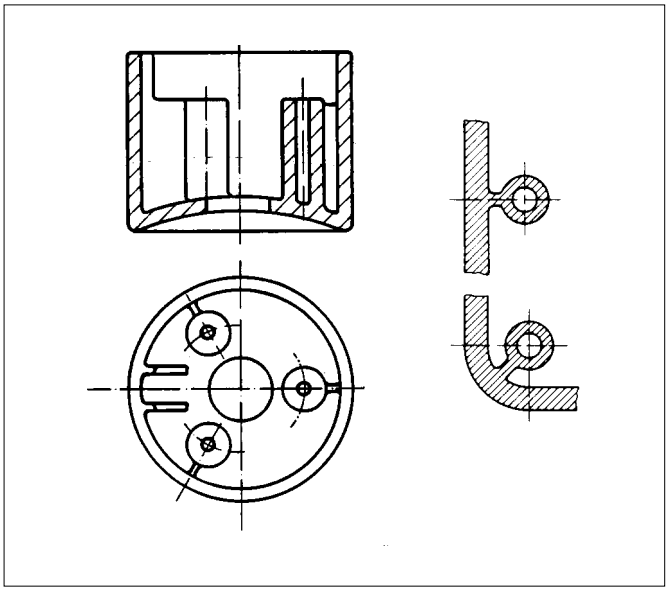

Fig. 3.09 **Good boss design**

Ribbing

Reinforcing ribs are an effective way to improve the rigidity and strength of moulded parts. Proper use can save material and weight, shorten moulding cycles and eliminate heavy cross section areas which could cause moulding problems. Where sink marks opposite ribs are objectionable, they can be hidden by use of a textured surface or some other suitable interruption in the area of the sink.

Ribs should be used only when the designer believes the added structure is essential to the structural performance of the part. The word ‘‘essential’’ must be emphasized, as too often ribs are added as an extra factor of safety, only to find that they produce warpage and stress concentration. It is better to leave any questionable ribs off the drawing. They can easily be added if prototype tests so indicate.

For design with ribs, see chapter 4.

Holes and Coring

Holes are easily produced in moulded parts by core pins which protrude into the mould cavity. Through holes are easier to mould than blind holes, because the core pin can be supported at both ends. Blind holes formed by pins supported at only one end can be off-centre due to deflection of the pin by the flow of molten plastic into the cavity. Therefore, the depth of a blind hole is generally limited to twice the diameter of the core pin. To obtain greater hole depth, a stepped core pin may be used or a side wall may be counterbored to reduce the length of an unsupported core pin (Fig. 3.11).

Holes with an axis which runs perpendicular to the mould-opening direction require retractable core pins or split tools. In some designs this can be avoided by placing holes in walls perpendicular to the parting line, using steps or extreme taper in the wall (Fig. 3.12). Core pins should be polished and draft added to improve ejection.

Where weld lines caused by flow of melt around core pins is objectionable from strength or appearance standpoint, holes may be spotted or partially cored to facilitate subsequent drilling as shown in Fig. 3.13.

The guide below, referring to Figure 3.14, will aid in eliminating part cracking or tear out of the plastic parts.

d = diameter

b ≥ d

c ≥ d

D ≥ d

t = thickness

For a blind hole, thickness of the bottom should be no less than ⅙ the hole diameter in order to eliminate bulging (Fig. 3.15 A). Fig. 3.15 B shows a better design in which the wall thickness is uniform throughout and there are no sharp corners where stress concentrations could develop.

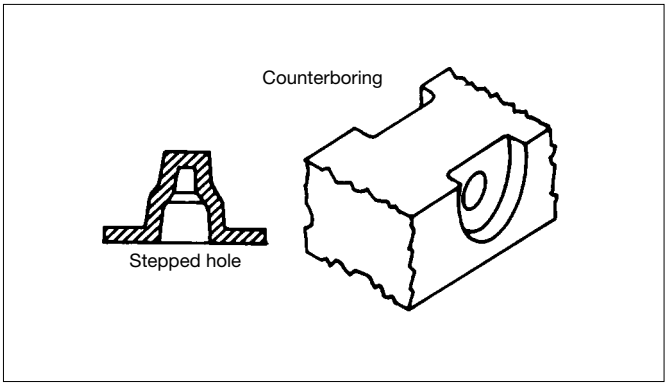

Fig. 3.11 **Blind hole with stepped core pin, counterboring**

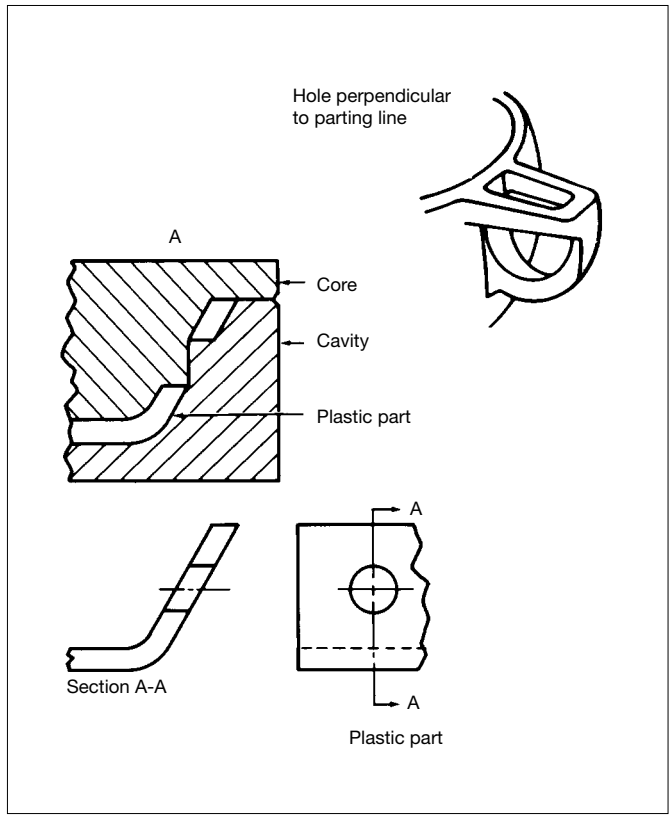

Fig. 3.12 **Avoiding side cores by special parting line design**

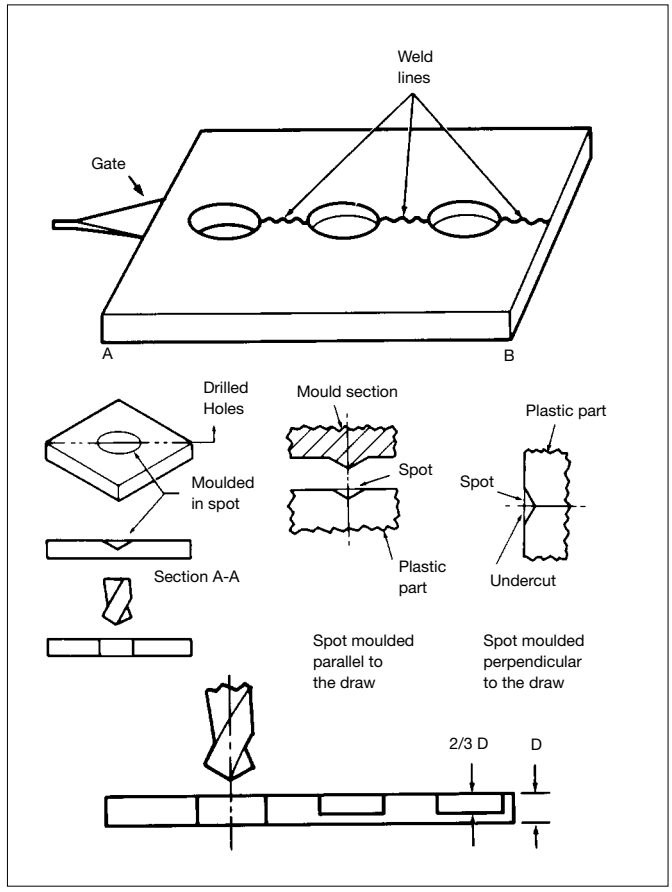

Fig. 3.13 **Drilled holes**

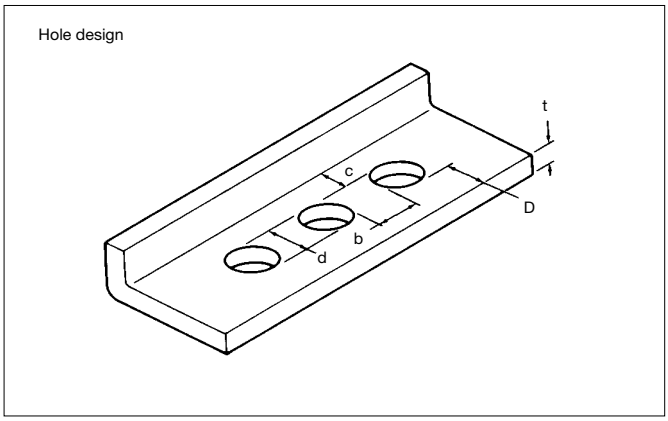

Fig. 3.14 **Hole design**

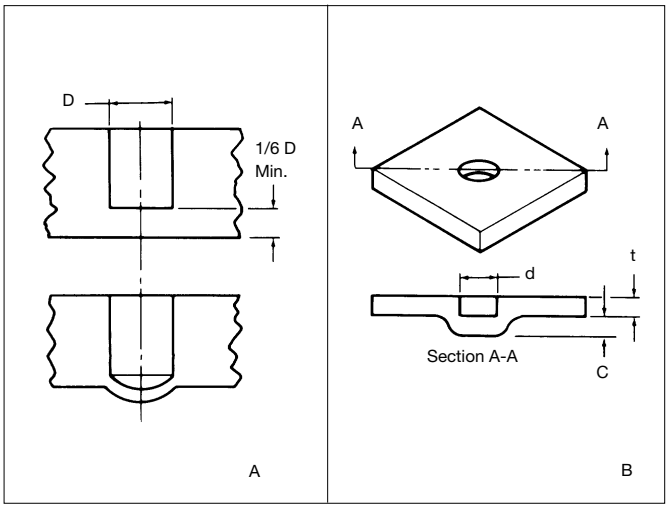

Fig. 3.15 **Blind holes**

Threads

When required, external and internal threads can be automatically moulded into the part, eliminating the need for mechanical thread-forming operations.

External Threads

Parts with external threads can be moulded in two ways. The least expensive way is to locate the parting line on the centreline of the thread, Fig. 3.16. It should be considered however that it is generally not possible to avoid an undercut in the parting line. This should lead to deformation of the thread on ejection. If this is not acceptable, or the axis of the thread is in the direction of mould-opening, the alternative is to equip the mould with an external, thread-unscrewing device.

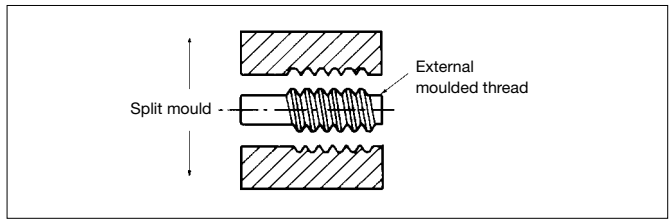

Fig. 3.16 **Moulding external threads without side core**

Internal Threads

Internal threads are moulded in parts by using automatic unscrewing devices or collapsible cores to produce partial threads. A third method is to use hand-loaded threaded inserts that are removed from the mould with the part.

Stripped Threads

When threaded parts are to be stripped from the mould, the thread must be of the roll or round type. The normal configuration is shown in Fig. 3.17 where R = 0,33 pitch. Requirements for thread stripping are similar to those for undercuts. Threaded parts with a ratio of diameter to wall thickness greater than 20 to 1 should be able to be stripped from a mould. Fig. 3.18 and 3.19 show the method of ejection from the mould.

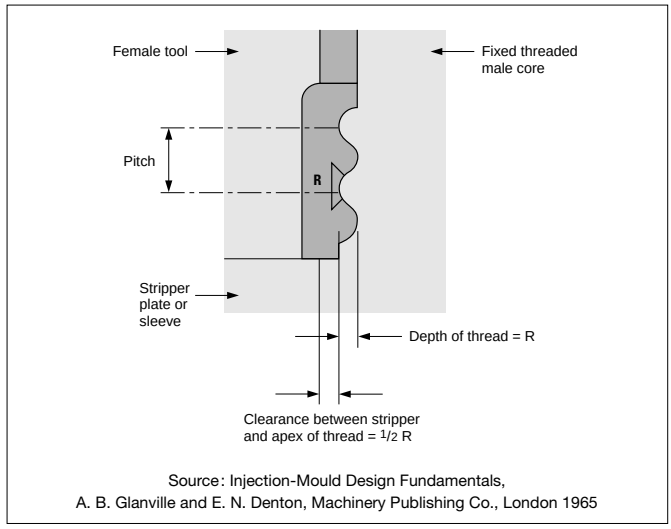

Fig. 3.17 **Stripping of roll-type thread**

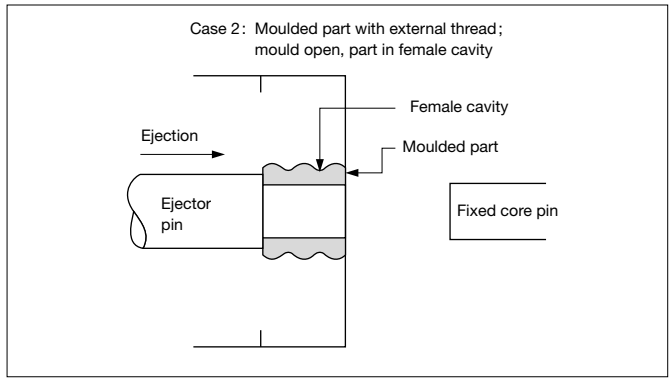

Fig. 3.18 **Mould-ejection of rounded thread-form undercuts – male**

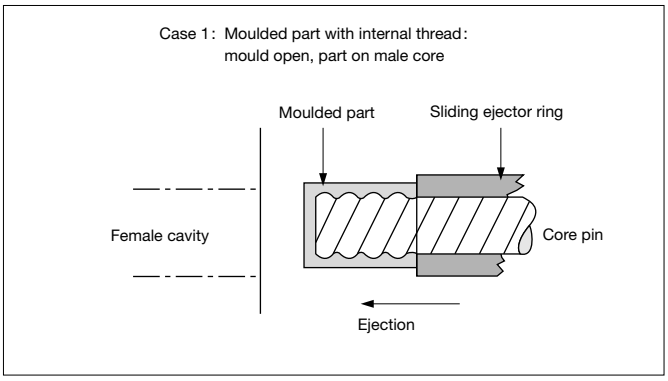

Fig. 3.19 **Mould-ejection of rounded thread-form undercuts – female**

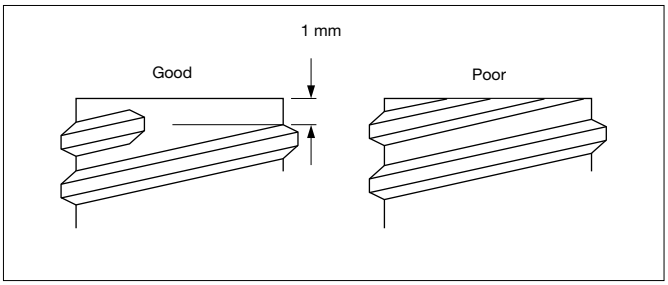

Fig. 3.20 **Correct termination of threads**

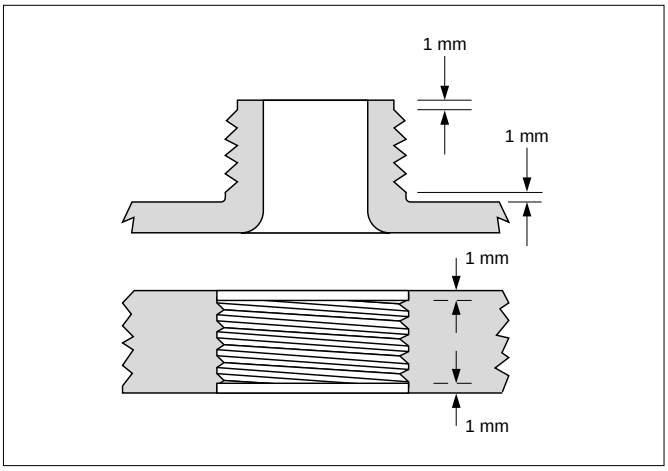

Fig. 3.21 **Suggested end clearance on threads**

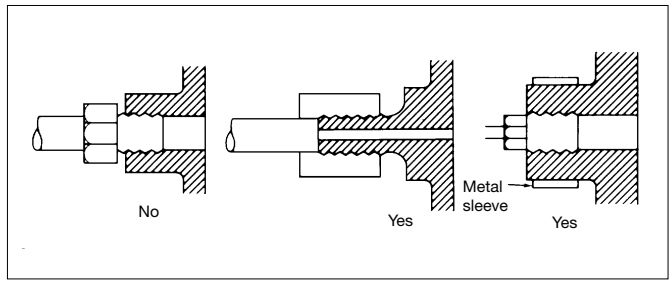

Fig. 3.22 **Metal-Plastic threaded joints**

Undercuts

Undercuts are formed by using split cavity moulds or collapsible cores.

Internal undercuts can be moulded by using two separate core pins, as shown in Fig. 3.23 A. This is a very practical method, but flash must be controlled where the two core pins meet.

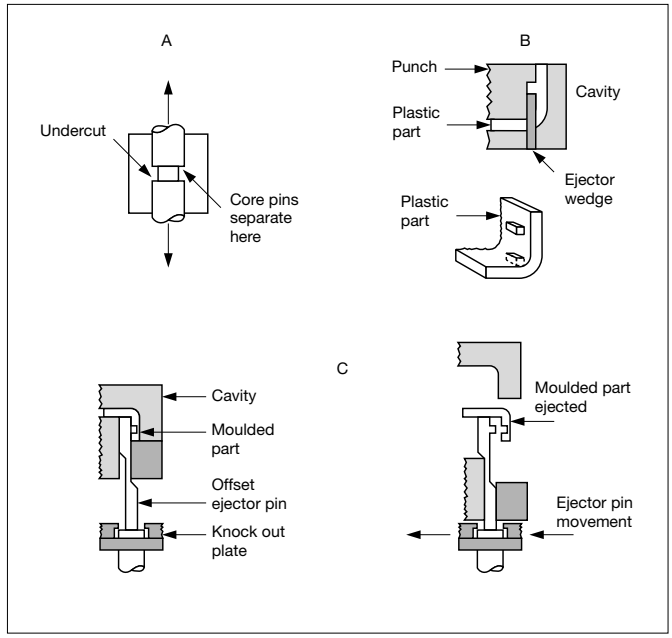

Fig. 3.23 **Undercut design solutions**

Effect of Creep

When designing threaded assemblies of metal to plastic, it is preferable to have the metal part external to the plastic. In other words, the male thread should be on the plastic part. However, in a metal/plastic assembly, the large difference in the coefficient of linear thermal expansion between the metal and plastic must be carefully considered. Thermal stresses created because of this difference will result in creep or stress relaxation of the plastic part after an extended period of time if the assembly is subject to temperature fluctuations or if the end use temperature is elevated. If the plastic part must be external to the metal, a metal back-up sleeve may be needed as shown in Fig. 3.22.

Fig. 3.23 B shows another method using access to the undercut through an adjoining wall.

Offset pins may be used for internal side wall undercuts or holes (Fig. 3.23 C).

The above methods eliminate the need for stripping and the concomitant limitation on the depth of the undercut.

Undercuts can also be formed by stripping the part from the mould. The mould must be designed to permit the necessary deflection of the part when it is stripped from the undercut.

Guidelines for stripped undercuts for specific resins are:

– *DELRIN® Acetal Resin* – It is possible to strip the parts from the cavities if undercuts are less than 5% of the diameter and are beveled. Usually only a circular shape is suitable for undercut holes. Other shapes, like rectangles, have high stress concentrations in the corners which prevent successful stripping. A collapsible core or other methods described previously should be used to obtain a satisfactory part for undercuts greater than 5%.

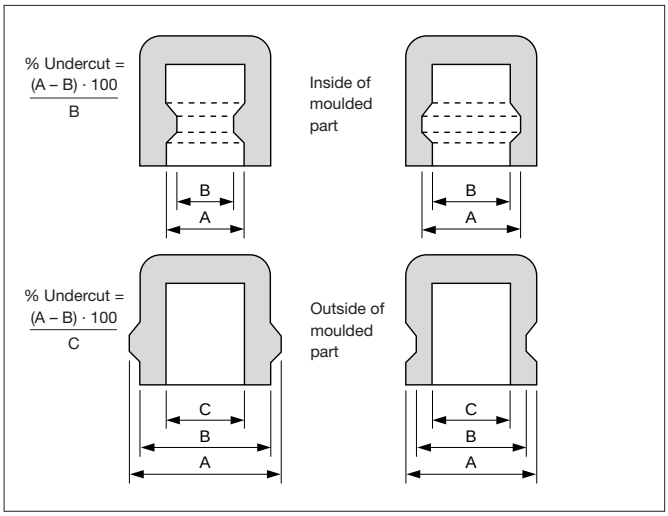

Fig 3.24 **Allowable undercuts for ZYTEL®**

– *ZYTEL® Nylon Resin* – Parts of ZYTEL® with a 6%-10% undercut usually can be stripped from a mould. To calculate the allowable undercut see Fig. 3.24. The allowable undercut will vary with thickness and diameter. The undercut should be beveled to ease the removal from the mould and to prevent over-stressing of the part.

– *Reinforced Resins* – While a collapsible core or split cavity undercut is recommended for glass-reinforced resins to minimize high stress conditions, carefully designed undercuts may be stripped. The undercut should be rounded and limited to 1% if stripping from a 40°C mould; or 2% from a 90°C mould.

Moulded-in Inserts

Inserts should be used when there is a functional need for them and when the additional cost is justified by improved product performance. There are four principal reasons
for using metal inserts:

– To provide threads that will be serviceable under continuous stress or to permit frequent part disassembly.

– To meet close tolerances on female threads.

– To afford a permanent means of attaching two highly loaded bearing parts, such as a gear to a shaft.

– To provide electrical conductance.

Once the need for inserts has been established, alternate means of installing them should be evaluated. Rather than insert moulding, press or snap-fitting or ultrasonic insertion should be considered. The final choice is usually influenced by the total production cost. However, possible disadvantages of using moulded-in inserts other than those mentioned previously should be considered:

– Inserts can "float", or become dislocated, causing damage to the mould.
– Inserts are often difficult to load, which can prolong the moulding cycle.
– Inserts may require preheating.
– Inserts in rejected parts are costly to salvage.

The most common complaint associated with insert moulding is delayed cracking of the surrounding plastic because of moulded-in hoop stress. The extent of the stress can be determined by checking a stress/strain diagramme for the specific material. To estimate hoop stress, assume that the strain in the material surrounding the insert is equivalent to the mould shrinkage.
Multiply the mould shrinkage by the flexural modulus of the material (shrinkage times modulus equals stress).
A quick comparison of the shrinkage rates for nylon and acetal homopolymer, however, puts things in better perspective. Nylon, which has a nominal mould shrinkage rate of 0,015 mm/mm* has a clear advantage over acetal homopolymer, with a nominal mould shrinkage rate of 0,020 mm/mm*. Cracking has not been a problem where moulded-in inserts are used in parts of ZYTEL® nylon resins.

The higher rate of shrinkage for acetal homopolymer yields a stress of approximate 52 MPa, which is about 75 per cent of the ultimate strength of the material.
The thickness of the boss material surrounding an insert must be adequate to withstand this stress. As thickness is increased, so is mould shrinkage. Due to stress relaxation stresses around inserts decrease with time.
After 100 000 hours, the 52 MPa stress will be reduced to approximately 15 MPa.

While this normally would not appear to be critical, long term data on creep (derived from data on plastic pipe) suggest the possibility that a constant stress of 18 MPa for 100 000 hours will lead to failure of the acetal homopolymer part. If the part is exposed to elevated temperatures, additional stress, stress risers or an adverse environment, it could easily fracture.

* 3,2 mm thickness – Recommended moulding conditions.

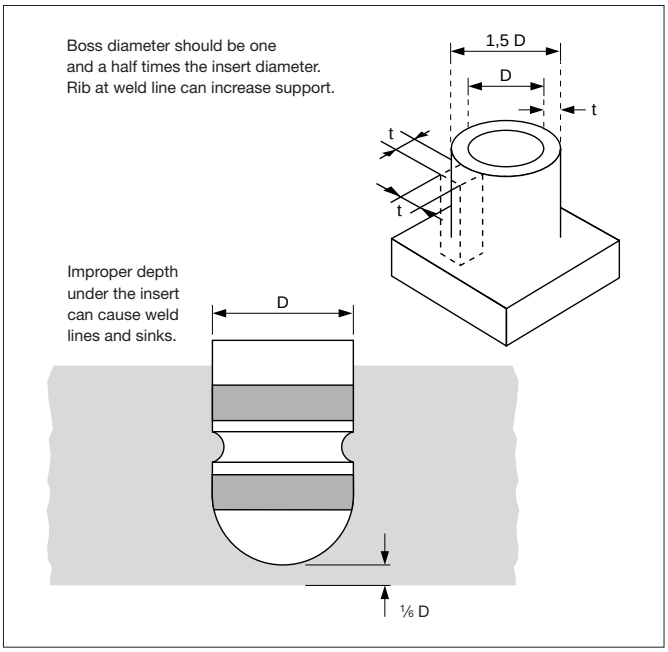

Fig 3.25 **Bosses and inserts**

Because of the possibility of such long-term failure, designers should consider the impact grades of acetal when such criteria as stiffness, low coefficient of friction and spring-like properties indicate that acetal would be the best material for the particular application.
These grades have a higher elongation, a lower mould shrinkage and better resistance to the stress concentration induced by the sharp edges of metal inserts.

Since glass and mineral reinforced resins offer lower mould shrinkage than their base resins, they have been used successfully in appropriate applications. Their lower elongation is offset by a typical mould shrinkage range of 0,3 to 1,0%.

Although the weld lines of heavily loaded glass or mineral-reinforced resins may have only 60 percent of the strength of an unreinforced material, the addition of a rib can substantially increase the strength of the boss (see Fig. 3.25).

Another aspect of insert moulding that the designer should consider is the use of nonmetallic materials for the insert. Woven-polyester-cloth filter material has been used as a moulded-in insert in a frame of glass-reinforced nylon.

Part Design for Insert Moulding

Designers need to be concerned about several special considerations when designing a part that will have moulded-in inserts:

- Inserts should have no sharp corners. They should be round and have rounded knurling. An undercut should be provided for pullout strength (see Fig. 3.25).
- The insert should protrude at least 0,40 mm into the mould cavity.
- The thickness of the material beneath it should be equal to at least one-sixth of the diameter of the insert to minimize sink marks.
- The toughened grades of the various resins should be evaluated. These grades offer higher elongation than standard grades and a greater resistance to cracking.
- Inserts should be preheated before moulding; 95° C for acetal, 120° C for nylon. This practice minimizes post-mould shrinkage, pre-expands the insert and improves the weld-line strength.
- A thorough end-use test programme should be conducted to detect problems in the prototype stage of product development. Testing should include temperature cycling over the range of temperatures to which the application may be exposed.

From a cost standpoint – particularly in high-volume, fully automated applications – insert costs are comparable to other post-moulding assembly operations. To achieve the optimum cost/performance results with insert moulding, it is essential that the designer be aware of possible problems. Specifying moulded inserts where they serve a necessary function, along with careful follow-up on tooling and quality control, will contribute to the success of applications where the combined properties of plastics and metals are required.

Tolerances

The tolerance which can be obtained by moulding is equal to:

$\Delta a = \pm (0{,}1 + 0{,}0015\ a)$ mm,

with a = dimension (mm)

In this formula, post moulding shrinkage, thermal expansion and/or creep are not considered and good moulding techniques are assumed to be used. For accurate moulding, 70% of the above tolerance can be obtained; for more coarse moulding, 140% should be taken.

For high accuracy moulding 40–50% of Δ a is applicable.

4 – Structural Design Formulae

Short Term Loads

If a plastic part is subjected to a load for only a short time (10-20 minutes) and the part is not stressed beyond its elastic limit, then classical design formulae found in engineering texts as reprinted here can be used with sufficient accuracy. These formulae are based on Hooke's Law which states that in the elastic region the part will recover to its original shape after stressing, and that stress is proportional to strain.

Tensile Stress – Short Term

Hooke's law is expressed as:

$$\sigma = E\,\varepsilon$$

where:

σ = tensile stress (MPa)

E = modulus of elasticity (MPa)

ε = elongation or strain (%/100)

The tensile stress is defined as:

$$\sigma = \frac{F}{A}$$

where:

F = total force (N)

A = total area (mm^2)

Bending Stress

In bending, the maximum stress is calculated from:

$$\sigma_b = \frac{My}{I} = \frac{M}{Z}$$

where:

σ_b = bending stress (MPa)

M = bending moment (Nmm)

I = moment of inertia (mm^4)

y = distance from neutral axis to extreme outer fibre (mm)

$Z = \frac{I}{y}$ = section modulus (mm^3)

The I and y values for some typical cross-sections are shown in Table 4.01.

Beams

Various beam loading conditions are shown in Table 4.02.

Beams in Torsion

When a plastic part is subjected to a twisting moment, it is considered to have failed when the shear strength of the part is exceeded.

The basic formula for torsional stress is: $\tau = \frac{M_T r}{K}$

where:

τ = Shear stress (MPa)

M_T = Twisting Moment (N · mm)

r = Distance to centre of rotation (mm)

K = Torsional Constant (mm^4)

Formulae for sections in torsion are given in Table 4.03.

To determine Θ, angle of twist of the part whose length is ℓ, the equation shown below is used:

$$\Theta = \frac{M_T \ell}{KG}$$

where:

Θ = angle of twist (radians)

K = Torsional Constant (mm4)

ℓ = length of member (mm)

G = modulus in shear (MPa)

To approximate G, the shear modulus, use the equation,

$$G = \frac{E}{2\,(1+\nu)}$$

where:

ν = Poisson's Ratio

E = Modulus (MPa)

Tubing and Pressure Vessels

Internal pressure in a tube, pipe or pressure vessel creates three (3) types of stresses in the part: Hoop, meridional and radial. See Table 4.04.

Buckling of Columns, Rings and Arches

The stress level of a short column in compression is calculated from the equation,

$$\sigma_c = \frac{F}{A}$$

The mode of failure in short columns is compressive failure by crushing. As the length of the column increases, however, this simple equation becomes invalid as the column approaches a buckling mode of failure. To determine if buckling will be a factor, consider a thin column of length ℓ, having frictionless rounded ends and loaded by force F. As F increases, the column will shorten in accordance with Hooke's Law. F can be increased until a critical value of F_C is reached.

Any load above F_C will cause the column to buckle.

In equation form:

$$F_C = \frac{\pi^2 E_t I}{\ell^2}$$

In this formula, which is called the Euler Formula for round ended columns:

E_t = Tangent modulus at stress σ_C
I = moment of inertia of cross section.

A safety factor of 3 to 4 should be applied.

Thus, if the value for F_C is less than the allowable load under pure compression, the buckling formula should be used.

If the end conditions are altered from the round ends, as is the case with most plastic parts, then the critical load is also altered. See Table 4.05 for additional end effect conditions for columns.

Flat Plates

Flat plates are another standard shape found in plastic part design. Their analysis can be useful in the design of such products as pump housings and valves.

A few of the most commonly used geometrics are shown in Table 4.06.

Arbitrary Structures

A lot of injection moulded parts have a shape which cannot be compared with one of the structures from Tables 4.01 to 4.06.

Deformations of, and stresses in these parts, can be analysed by using the Finite Element method.

For recommended material properties, mesh to be used, simulation of loads and boundary conditions, and assessment of results, DuPont's Computer Aided Technical Service can provide assistance.

Equivalent Stresses

Tensile and bending stresses are always pependicular (normal) to a considered cross section, while shear stresses act in the cross-sectional plane. At a given location there are often multiple stress components acting at the same time. To express the "danger" of such a multiaxial stress state by only one number, "equivalent stresses" are used. A widely known formula to calculate the equivalent stress in isotropic materials is the "Von Mises" criterium (two-dimensional):

$$\sigma_{eq,\ VonMises} = \sqrt{\sigma_x^2 + \sigma_y^2 - \sigma_x \sigma_y + 3\tau_{xy}}$$

with: σ_x, σ_y: normal stress
τ_{xy}: shear stress

according:

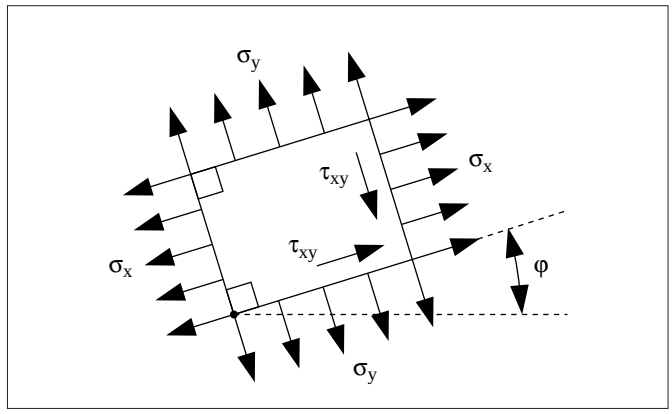

Another well known criterium is that of "Tresca":

$$\sigma_{eq,\ Tresca} = \sigma_1 - \sigma_2$$

with: σ_1 = maximum principal stress
σ_2 = minimum principal stress (≤ 0)

Principle stresses are normal stresses at a given location, whereby the cross-sectional plane is rotated in such a way that the shear stress $\tau_{xy} = 0$, see Figure above.

The equivalent stress should be less than the tensile strength at design conditions, as measured on test specimen; whereby application dependant safety factors must be considered.

$$\sigma_{eq} \leq \sigma_{tensile} / S$$

with: S = Safety factor (≥ 1).

Brittle Materials

For brittle materials ($\epsilon_B < 5\%$) also the following conditions should be satisfied:

$$\sigma_{eq} \leq \frac{\epsilon_B E}{S \times SCF}$$

with: ϵ_B = elongation at break (%/100)
E = modulus of elasticity
S = safety factor (≥ 1)
SCF = stress concentration factor (≥ 1)

Orthotropic Materials

Glass fibre reinforced plastics have properties (modulus of elasticity, coefficient of linear thermal expansion, tensile strength), which are significantly different for in-flow and transverse to flow directions. Analyses with orthotropic (anisotropic) materials is in general only possible with the finite element method. In this approach, a flow analysis is included to calculate the material orientations of the elements. Formulae to calculate the equivalent stresses in othotropic materials exist, but are too complicated for normal users. A more simple (but still good enough) approach is to adjust the allowable stress ($\sigma_{tensile} / S$), to a value applicable for the given orientation.

Structural Design Formulae

Table 4.01 **Properties of Sections**

Form of section	Area A	Distance from centroid to extremities of section y_1, y_2	Moments of inertia I_1 and I_2 about principal central axis 1 and 2	Radii of gyration r_1 and r_2 about principal central axes
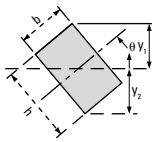	$A = bh$	$y_1 = y_2 = \frac{h \cos\theta + b \sin\theta}{2}$	$I_1 = \frac{bh}{12}(h^2 \cos^2\theta + b^2 \sin^2\theta)$	$r_1 = \sqrt{\frac{(h^2 \cos^2\theta + b^2 \sin^2\theta)}{12}}$
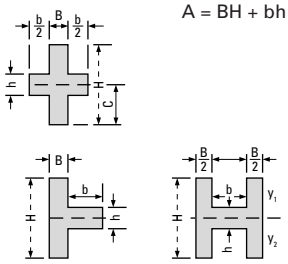	$A = BH + bh$	$y_1 = y_2 = \frac{H}{2}$	$I_1 = \frac{BH^2 + bh^3}{12}$	$r_1 = \sqrt{\frac{BH^3 + bh^3}{12(BH + bh)}}$
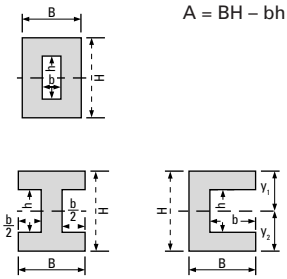	$A = BH - bh$	$y_1 = y_2 = \frac{H}{2}$	$I_1 = \frac{BH^3 - bh^3}{12}$	$r_1 = \sqrt{\frac{BH^3 - bh^3}{12(BH - bh)}}$
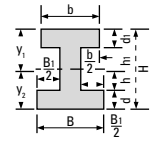	$A = bd_1 + Bd + a(H - d - d_1)$	$y_1 = H - y_2$ $y_2 = \frac{1}{2}\frac{aH^2 + B_1d^2 + b_1d_1(2H - d_1)}{aH + B_1d + b_1d_1}$	$I_1 = \frac{1}{3}(By_2^3 - B_1h^3 + by_1^3 - b_1h_1^3)$	$r_1 = \sqrt{\frac{I}{(Bd + bd_1) + a(h + h_1)}}$
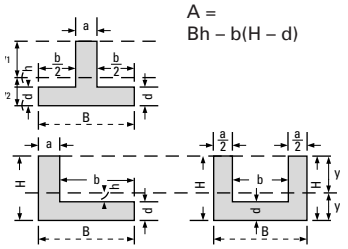	$A = Bh - b(H - d)$	$y_1 = H - y_2$ $y_2 = \frac{aH^2 + bd^2}{2(aH + bd)}$	$I_1 = \frac{1}{3}(By_2^3 - bh^3 + ay_1^3)$	$r_1 = \sqrt{\frac{I}{Bd + a(H - d)}}$
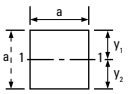	$A = a^2$	$y_1 = y_2 = \frac{1}{2}a$	$I_1 = I_2 = I_3 = \frac{1}{12}a^4$	$r_1 = r_2 = r_3 = 0.289a$
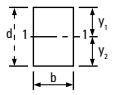	$A = bd$	$y_1 = y_2 = \frac{1}{2}d$	$I_1 = \frac{1}{12}bd^3$	r_1 0.289d

Form of section	Area A	Distance from centroid to extremities of section y_1, y_2	Moments of inertia I_1 and I_2 about principal central axis 1 and 2	Radii of gyration r_1 and r_2 about principal central axes
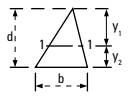	$A = \frac{1}{2} bd$	$y_1 = \frac{2}{3} d$ $y_2 = \frac{1}{3} d$	$I_1 = \frac{1}{36} bd^3$	$r_1 = 0.2358d$
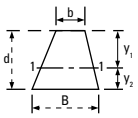	$A = \frac{1}{2}(B + b)d$	$y_1 = d\,\frac{2B + b}{3(B + b)}$ $y_2 = d\,\frac{B + 2b}{3(B + b)}$	$I_1 = \frac{d^3\,(B^2 + 4Bb + b^2)}{36(B + b)}$	$r1 = \frac{d}{6(B + b)}\sqrt{2(B^2 + 4Bb + b^2)}$
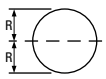	$A = \pi R^2$	$y_1 = y_2 = R$	$I = \frac{1}{4}\pi R^4$	$r = \frac{1}{2} R$
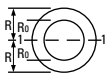	$A = \pi (R^2 - R_0^2)$	$y_1 = y_2 = R$	$I = \frac{1}{4}\pi (R^4 - R_0^4)$	$r = \sqrt{\frac{1}{4}(R^2 + R_0^2)}$
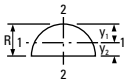	$A = \frac{1}{2}\pi R^2$	$y_1 = 0.5756R$ $y_2 = 0.4244R$	$I_1 = 0.1098R^4$ $I_2 = \frac{1}{8}\pi R^4$	$r_1 = 0.2643R$ $r_2 = \frac{1}{2} R$
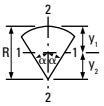	$A = \alpha R^2$	$y_1 = R\left(1 - \frac{2 \sin \alpha}{3\alpha}\right)$ $y_2 = 2R\,\frac{\sin \alpha}{3\alpha}$	$I_1 = \frac{1}{4} R^4 \left[\alpha + \sin \alpha \cos \alpha - \frac{16 \sin^2 \alpha}{9\alpha}\right]$ $I_2 = \frac{1}{4} R^4 [\alpha - \sin \alpha \cos \alpha]$	$r_1 = \frac{1}{2} R \sqrt{1 + \frac{\sin \alpha \cos \alpha}{\alpha} - \frac{16 \sin^2 \alpha}{9\alpha^2}}$ $r_2 = \frac{1}{2} R \sqrt{1 - \frac{\sin \alpha \cos \alpha}{\alpha}}$
(1) 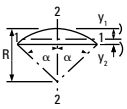	$A = \frac{1}{2} R^2 (2\alpha - \sin 2\alpha)$	$y_1 = R\left(1 - \frac{4 \sin^3 \alpha}{6\alpha - 3 \sin 2\alpha}\right)$ $y_2 = R\left(\frac{4 \sin^3 \alpha}{6\alpha - 3 \sin 2\alpha} - \cos \alpha\right)$	$I_1 = \frac{R^4}{4}\left[\alpha + \sin \alpha \cos \alpha + 2 \sin^3 \alpha \cos \alpha - \frac{16 \sin^6 \alpha}{9(\alpha - \sin \alpha \cos \alpha}\right]$ $I_2 = \frac{R^4}{12} [3\alpha - 3 \sin \alpha \cos \alpha - 2 \sin^3 \alpha \cos \alpha]$	$r_2 = \frac{1}{2} R \sqrt{1 + \frac{2 \sin^3 \alpha \cos \alpha}{\alpha - \sin \alpha \cos \alpha} - \frac{64 \sin^6 \alpha}{9(2\alpha - \sin 2\alpha)^2}}$ $r_2 = \frac{1}{2} R \sqrt{1 - \frac{2 \sin^3 \alpha \cos \alpha}{3(\alpha - \sin \alpha \cos \alpha)}}$
(2) 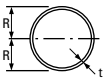	$A = 2\pi Rt$	$y_1 = y_2 = R$	$I = \pi R^3 t$	$r = 0.707R$
(3) 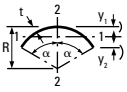	$A = 2\alpha Rt$	$y_1 = R\left(\frac{1 - \sin \alpha}{\alpha}\right) + \frac{t}{2}$ $y_2 = 2R\left(\frac{\sin \alpha}{\alpha} - \cos \alpha\right) + \frac{t}{2}\cos \alpha$	$I_1 = R^3 t\left(\alpha + \sin \alpha \cos \alpha - \frac{2 \sin^2 \alpha}{\alpha}\right) + \frac{\alpha Rt^3}{b}$ $I_2 = R^3 t (\alpha - \sin \alpha \cos \alpha)$	$r_1 = R \sqrt{\frac{\alpha + \sin \alpha \cos \alpha - 2 \sin^2 \alpha/\alpha}{2\alpha}}$ $r_2 = R \sqrt{\frac{\alpha - \sin \alpha \cos \alpha}{2\alpha}}$

(1) Circular sector
(2) Very thin annulus
(3) Sector of thin annulus

Table 4.02 **Shear, Moment, and Deflection Formulae for Beams; Reaction Formulae for Rigid Frames**

Notation: W = load (N); w = unit load (N/linear mm); M is positive when clockwise; V is positive when upward; y is positive when upward. Constraining moments, applied couples, loads, and reactions are positive when acting as shown. All forces are in N, all moments in N · mm; all deflections and dimensions in mm. θ is in radians, I = moment of inertia of beam cross section (mm^4).

Loading, support and reference number	Reactions R_1 and R_2, vertical shear V	Bending moment M and maximum bending moment	Deflection y, maximum deflection, and end slope θ
Cantilever end load 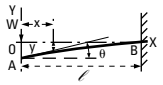	$R_2 = +W$ $V = -W$	$M = -Wx$ Max $M = -W\ell$ at B	$y = \frac{1}{6}\frac{W}{EI}(x^3 - 3\ell^2 x + 2\ell^3)$ Max $y = -\frac{1}{3}\frac{W\ell^3}{EI}$ at A $\theta = +\frac{1}{2}\frac{W\ell^2}{EI}$ at A
Cantilever, intermediate load 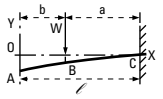	$R_2 = +W$ (A to B) $V = 0$ (B to C) $V = -W$	(A to B) $M = 0$ (B to C) $M = -W(x-b)$ Max $M = -Wa$ at C	(A to B) $y = -\frac{1}{6}\frac{W}{EI}(-a^3 + 3a^2\ell - 3a^2x)$ (B to C) $y = -\frac{1}{6}\frac{W}{EI}[(x-b)^3 - 3a^2(x-b) + 2a^3]$ Max $y = -\frac{1}{6}\frac{W}{EI}(3a^2\ell - a^3)$ $\theta = +\frac{1}{2}\frac{Wa^2}{EI}$ (A to B)
Cantilever, uniform load 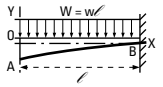	$R_2 = +W$ $V = -\frac{W}{\ell}x$	$M = -\frac{1}{2}\frac{W}{\ell}x^2$ Max $M = -\frac{1}{2}W\ell$ at B	$y = -\frac{1}{24}\frac{W}{EI\ell}(x^4 - 4\ell^3 x + 3\ell^4)$ Max $y = -\frac{1}{8}\frac{W\ell^3}{EI}$ $\theta = +\frac{1}{6}\frac{W\ell^2}{EI}$ at A
Cantilever, end couple 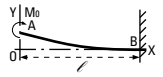	$R_2 = 0$ $V = 0$	$M = M_0$ Max $M = M_0$ (A to B)	$y = \frac{1}{2}\frac{M_0}{EI}(\ell^2 - 2\ell x + x^2)$ Max $y = +\frac{1}{2}\frac{M_0\ell^2}{EI}$ at A $\theta = -\frac{M_0\ell}{EI}$ at A
Cantilever, intermediate couple 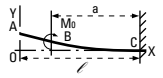	$R_2 = 0$ $V = 0$	(A to B) $M = 0$ (B to C) $M = M_0$ Max $M = M_0$ (B to C)	(A to B) $y = \frac{M_0 a}{EI}\left(\ell - \frac{1}{2}a - x\right)$ (B to C) $y = \frac{1}{2}\frac{M_0}{EI}[(x - \ell + a)^2 - 2a(x - \ell + a) + a^2]$ Max $y = \frac{M_0 a}{EI}\left(\ell - \frac{1}{2}a\right)$ at A $\theta = -\frac{M_0 a}{EI}$ (A to B)
End supports, center load 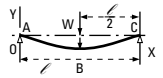	$R_1 = +\frac{1}{2}W$ $R_2 = +\frac{1}{2}W$ (A to B) $V = +\frac{1}{2}W$ (B to C) $V = -\frac{1}{2}W$	(A to B) $M = +\frac{1}{2}Wx$ (B to C) $M = +\frac{1}{2}W(\ell - x)$ Max $M = +\frac{1}{4}W\ell$ at B	(A to B) $y = -\frac{1}{48}\frac{W}{EI}(3\ell^2 x - 4x^3)$ Max $y = -\frac{1}{48}\frac{W\ell^3}{EI}$ at B $\theta = -\frac{1}{16}\frac{W\ell^2}{EI}$ at A, $\theta = +\frac{1}{16}\frac{W\ell^2}{EI}$ at C

Loading, support and reference number	Reactions R_1 and R_2, vertical shear V	Bending moment M and maximum bending moment	Deflection y, maximum deflection, and end slope θ
End supports, uniform load 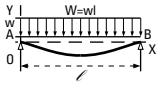	$R_1 = +\frac{1}{2}W$ $R_2 = +\frac{1}{2}W$ $V = \frac{1}{2}W\left(1 - \frac{2x}{\ell}\right)$	$M = \frac{1}{2}W\left(x - \frac{x^2}{\ell}\right)$ Max $M = +\frac{1}{8}W\ell$ at $x = \frac{1}{2}\ell$	$y = -\frac{1}{24}\frac{Wx}{E\ell}(\ell^3 - 2\ell x^2 + x^3)$ Max $y = -\frac{5}{384}\frac{W\ell^3}{EI}$ at $x = \frac{1}{2}\ell$ $\theta = -\frac{1}{24}\frac{W\ell^2}{EI}$ at A; $\theta = +\frac{1}{24}\frac{W\ell^2}{EI}$ at B
End supports, intermediate load 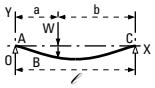	$R_1 = +W\frac{b}{\ell}$ $R_2 = +W\frac{a}{\ell}$ (A to B) $V = +W\frac{b}{\ell}$ (B to C) $V = -W\frac{a}{\ell}$	(A to B) $M = +W\frac{b}{\ell}x$ (B to C) $M = +W\frac{a}{\ell}(\ell - x)$ Max $M = +W\frac{ab}{\ell}$ at B	(A to B) $y = -\frac{Wbx}{6E\ell}[2\ell(\ell - x) - b^2 - (\ell - x)^2]$ (B to C) $y = -\frac{Wa(\ell - x)}{6E\ell}[2\ell b - b^2 - (\ell - x)^2]$ Max $y = -\frac{Wab}{27E\ell}(a + 2b)\sqrt{3a(a + 2b)}$ at $x = \sqrt{\frac{1}{3}a(a + 2b)}$ when $a > b$ $\theta = -\frac{1}{6}\frac{W}{EI}\left(b\ell - \frac{b^3}{\ell}\right)$ at A; $\theta = +\frac{1}{6}\frac{W}{EI}\left(2b\ell + \frac{b^3}{\ell} - 3b^2\right)$ at C;
End supports, end couple 	$R_1 = -\frac{M_0}{\ell}$ $R_1 = +\frac{M_0}{\ell}$ $V = R_1$	$M = M_0 + R_1x$ Max $M = M_0$ at A	$y = -\frac{1}{6}\frac{M_0}{EI}\left(3x^2 - \frac{x^3}{\ell} - 2\ell x\right)$ Max $y = 0.0642\frac{M_0\ell^2}{EI}$ at $x = 0.422\ell$ $\theta = -\frac{1}{3}\frac{M_0\ell}{EI}$ at A; $\theta = +\frac{1}{6}\frac{M_0\ell}{EI}$ at B
One end fixed, one end supported. Center load (4) 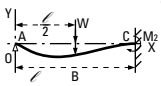	$R_1 = \frac{5}{16}W$ $R_2 = \frac{11}{16}W$ $M_2 = \frac{3}{16}W\ell$ (A to B) $V = +\frac{5}{16}W$ (B to C) $V = -\frac{11}{16}W$	(A to B) $M = \frac{5}{16}Wx$ (B to C) $M = W\left(\frac{1}{2}\ell - \frac{11}{16}x\right)$ Max $+M = \frac{5}{32}W\ell$ at B Max $-M = -\frac{3}{16}W\ell$ at C	(A to B) $y = \frac{1}{96}\frac{W}{EI}(5x^3 - 3\ell^2x)$ (B to C) $y = \frac{1}{96}\frac{W}{EI}\left[5x^3 - 16\left(x - \frac{\ell}{2}\right)^3 - 3\ell^2x\right]$ Max $y = -0.00932\frac{W\ell^3}{EI}$ at $x = 0.4472\ell$ $\theta = -\frac{1}{32}\frac{W\ell^2}{EI}$ at A
One end fixed, one end supported. Intermediate load (4) 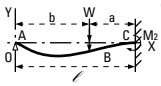	$R_1 = \frac{1}{2}W\left(\frac{3a^2\ell - a^3}{\ell^3}\right)$ $R_2 = W - R_1$ $M_2 = \frac{1}{2}W\left(\frac{a^3 + 2a\ell^2 - 3a^2\ell}{\ell^2}\right)$ (A to B) $V = +R_1$ (B to C) $V = R_1 - W$	(A to B) $M = R_1x$ (B to C) $M = R_1x - W(x - \ell + a)$ Max $+M = R_1(\ell - a)$ at B; Max. possible value $= 0.174\,W\ell$ when $a = 0.634\ell$ Max $-M = -M_2$ at C; Max. possible value $= -0.1927W\ell$ when $a = 0.4227\ell$	(A to B) $y = \frac{1}{6EI}[R_1(x^3 - 3\ell^2x) + 3Wa^2x]$ (B to C) $y = \frac{1}{6EI}\{R_1(x^3 - 3\ell^2x) + W[3a^2x - (x - b)^3]\}$ if $a < 0.586\ell$, max y is between A and B at: $x = \ell\sqrt{1 - \frac{2\ell}{3\ell - a}}$ if $a > 0.586\ell$, max is at: $x = \frac{\ell(\ell^2 + b^2)}{3\ell^2 - b^2}$ if $a > 0.586\ell$, max y is at B and $x = -0.0098\frac{W\ell^3}{EI}$, max possible deflection $\theta = \frac{1}{4}\frac{W}{EI}\left(\frac{a^3}{\ell} - a^2\right)$ at A

(4) M_2 = Constraining Moment

Loading, support and reference number	Reactions R_1 and R_2, constraining moments M_1 and M_2 and vertical shear V	Bending moment M and maximum positive and negative bending moment	Deflection y, maximum deflection, and end slope θ
One end fixed, one end supported. Uniform load. 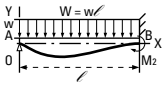	$R_1 = \frac{3}{8} W$ $R_2 = \frac{5}{8} W$ $M_2 = \frac{1}{8} W\ell$ $V = W\left(\frac{3}{8} - \frac{x}{\ell}\right)$	$M = W\left(\frac{3}{8}x - \frac{1}{2}\frac{x^2}{\ell}\right)$ Max + $M = \frac{9}{128} W\ell$ at $x = \frac{3}{8}\ell$ Max − $M = -\frac{1}{8} W\ell$ at B	$y = -\frac{1}{48}\frac{W}{E\ell I}(3\ell x^3 - 2x^4 + \ell^3 x)$ Max $y = -0.0054\frac{W\ell^3}{EI}$ at $x = 0.4215\ell$ $\theta = -\frac{1}{24}\frac{W\ell^2}{EI}$ at A
One end fixed, one end supported. End couple. 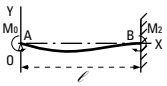	$R_1 = -\frac{3}{2}\frac{M_0}{\ell}$ $R_2 = +\frac{3}{2}\frac{M_0}{\ell}$ $M_2 = \frac{1}{2} M_0$ $V = -\frac{3}{2}\frac{M_0}{\ell}$	$M = \frac{1}{2} M_0\left(2 - 3\frac{x}{\ell}\right)$ Max + $M = M_0$ at A Max − $M = \frac{1}{2} M_0$ at B	$y = \frac{1}{4}\frac{M_0}{EI}\left(2x^2 - \frac{x^3}{\ell} - x\ell\right)$ Max $y = -\frac{1}{27}\frac{M_0\ell^2}{EI}$ at $x = \frac{1}{3}\ell$ $\theta = -\frac{1}{4}\frac{M_0\ell}{EI}$ at A
One end fixed, one end supported. Intermediate couple. 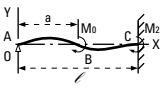	$R_1 = -\frac{3}{2}\frac{M_0}{\ell}\left(\frac{\ell^2 - a^2}{\ell^2}\right)$ $R_2 = +\frac{3}{2}\frac{M_0}{\ell}\left(\frac{\ell^2 - a^2}{\ell^2}\right)$ $M_2 = \frac{1}{2} M_0\left(1 - 3\frac{a2}{\ell^2}\right)$ (A to B) $V = R_1$ (B to C) $V = R_1$	(A to B) $M = R_1 x$ (B to C) $M = R_1 x + M_0$ Max + $M = M_0\left[1 - \frac{3a(\ell^2 - a^2)}{2\ell^3}\right]$ at B (to right) Max − $M = -M_2$ at C (when $a < 0.275\ell$) Max − $M = R_1 a$ at B (to left) (when $a > 0.275\ell$)	(A to B) $y = \frac{M_0}{EI}\left[\frac{\ell^2 - a^2}{4\ell^3}(3\ell^2 x - x^3) - (\ell - a)x\right]$ (B to C) $y = \frac{M_0}{EI}\left[\frac{\ell^2 - a^2}{4\ell^3}(3\ell^2 x - x^3) - \ell x + \frac{1}{2}(x^2 + a^2)\right]$ $\theta = \frac{M_0}{EI}\left(a - \frac{1}{4}\ell - \frac{3}{4}\frac{a^2}{\ell}\right)$ at A
Both ends fixed. Center load. 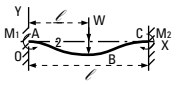	$R_1 = \frac{1}{2} W$ $R_2 = \frac{1}{2} W$ $M_1 = \frac{1}{8} W\ell$ $M_2 = \frac{1}{8} W\ell$ (A to B) $V = +\frac{1}{2} W$ (B to C) $V = -\frac{1}{2} W$	(A to B) $M = \frac{1}{8} W(4x - \ell)$ (B to C) $M = \frac{1}{8} W(3\ell - 4x)$ Max + $M = \frac{1}{8} W\ell$ at B Max − $M = -\frac{1}{8} W\ell$ at A and C	(A to B) $y = -\frac{1}{48}\frac{W}{EI}(3\ell x^2 - 4x^3)$ Max $y = -\frac{1}{192}\frac{W\ell^3}{EI}$ at B

Loading, support and reference number	Reactions R_1 and R_2, constraining moments M_1 and M_2 and vertical shear V	Bending moment M and maximum positive and negative bending moment	Deflection y, maximum deflection, and end slope θ
Both ends fixed. Intermediate couple. 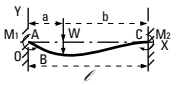 	$R_1 = \frac{Wb^2}{\ell^3}(3a+b)$ $R_2 = \frac{Wa^2}{\ell^3}(3b+a)$ $M_1 = W\frac{ab^2}{\ell^2}$ $M_2 = W\frac{a^2b}{\ell^2}$ (A to B) $V = R_1$ (B to C) $V = R_1 - W$	(A to B) $M = -W\frac{ab^2}{\ell^2} + R_1x$ (B to C) $M = -W\frac{ab^2}{\ell^2} + R_1x - W(x-a)$ Max $+M = -W\frac{ab^2}{\ell^2} + R_1$ at B; max possible value $= \frac{1}{8}W\ell$ when $a = \frac{1}{2}\ell$ Max $-M = -M_1$ when $a < b$; max possible value $= -0.1481\,W\ell$ when $a = \frac{1}{3}\ell$ Max $-M = -M_2$ when $a > b$; max possible value $= -0.1481\,W\ell$ when $a = \frac{2}{3}\ell$	(A to B) $y = \frac{1}{6}\frac{Wb^2x^2}{EI\ell^3}(3ax + bx - 3a\ell)$ (B to C) $y = \frac{1}{6}\frac{Wa^2(\ell-x)^2}{EI\ell^3}[(3b+a)(\ell-x) - 3b\ell]$ Max $y = -\frac{2}{3}\frac{W}{EI}\frac{a^3b^2}{(3a+b)^2}$ at $x = \frac{2a\ell}{3a+b}$ if $a > b$ Max $y = -\frac{2}{3}\frac{W}{EI}\frac{a^2b^3}{(3b+a)^2}$ at $x = \ell - \frac{2b\ell}{3b+a}$ if $a < b$
Both ends fixed. Uniform load. 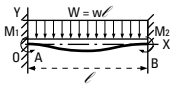 	$R_1 = \frac{1}{2}W$ $R_2 = \frac{1}{2}W$ $M_1 = \frac{1}{12}W\ell$ $M_2 = \frac{1}{12}W\ell$ $V = \frac{1}{2}W\left(\frac{1-2x}{\ell}\right)$	$M = \frac{1}{2}W\left(x - \frac{x^2}{\ell} - \frac{1}{6}\ell\right)$ Max $+M = \frac{1}{24}W\ell$ at $x = \frac{1}{2}\ell$ Max $-M = -\frac{1}{12}W\ell$ at A and B	$y = \frac{1}{24}\frac{Wx^2}{EI\ell}(2\ell x - \ell^2 - x^2)$ Max $y = -\frac{1}{384}\frac{W\ell^3}{EI}$ at $x = \frac{1}{2}\ell$
Both ends fixed. Intermediate couple. 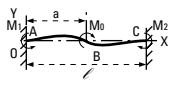 	$R_1 = -6\frac{M_0}{\ell^3}(a\ell - a^2)$ $R_2 = 6\frac{M_0}{\ell^3}(a\ell - a^2)$ $M_1 = -\frac{M_0}{\ell^2}(4\ell a - 3a^2 - \ell^2)$ $M_2 = \frac{M_0}{\ell^2}(2\ell a - 3a^2)$ $V = R_1$	(A to B) $M = -M_1 + R_1x$ (B to C) $M = -M_1 + R_1x + M_0$ Max $+M = M_0\left(4\frac{a}{\ell} - 9\frac{a^2}{\ell^2} + 6\frac{a^3}{\ell^3} - 1\right)$ just right of B Max $+M = M_0\left(4\frac{a}{\ell} - 9\frac{a^2}{\ell^2} + 6\frac{a^3}{\ell^3}\right)$ just left of B	(A to B) $y = -\frac{1}{6EI}(3M_1x^2 - R_1x^3)$ (B to C) $y = \frac{1}{6EI}[(M_0 - M_1)(3x^2 - 6\ell x + 3\ell^2) - R_1(3\ell^2x - x^3 - 2\ell^3)]$ Max $-y$ at $x = \frac{2M_1}{R_1}$ if $a > \frac{1}{3}\ell$ Max $-y$ at $x = \ell - \frac{2M_2}{R_2}$ if $a < \frac{2}{3}\ell$

Table 4.03 **Formulae for Torsional Deformation and Stress**

General formulae: $\theta = \dfrac{M_T L}{KG}$, $\tau = \dfrac{M_T}{Q}$, where θ = angle of twist (rad); M_T = twisting moment (N · mm);

ℓ = length (mm); τ = unit shear stress (MPa); G = shear modulus (MPa); K (mm^4) is a function of the cross section.

Form an dimensions of cross sections	Formula for K in $\theta = \dfrac{M_T \ell}{KG}$	Formula for shear stress
Solid circular section 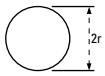	$K = \dfrac{1}{2}\ \pi r^4$	Max $\tau = \dfrac{2M_T}{\pi\ r^3}$ at boundary
Solid elliptical section 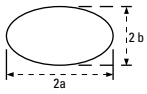	$K = \dfrac{\pi a^3 b^3}{a^2 + b^2}$	Max $\tau = \dfrac{2M_T}{\pi\ ab^2}$ at ends for minor axis
Solid square section 	$K = 0.1406a^4$	Max $\tau = \dfrac{M_T}{0.208a^3}$ at mid-point of each side
Solid rectangular section 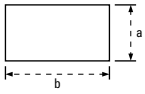 (b ≥ a)	$K = a^3 b\left[\dfrac{1}{3} - 0.28\ \dfrac{a}{b}\left(1 - \dfrac{a^4}{12b^4}\right)\right]$	Max $\tau = \dfrac{M_T(1.8a + 3.0b)}{a^2 b^2}$ au milieu de chaque grand côté
Hollow concentric circular section 	$K = \dfrac{1}{2}\ \pi\ (r_1^4 - r_0^4)$	Max $\tau = \dfrac{2M_T\, r_1}{\pi\ (r_1^4 - r_0^4)}$ at outer boundary
Any thin open tube of uniform thickness U = length of median line, shown dotted 	$K = \dfrac{1}{2}\ Ut^3$	Max $\tau = \dfrac{M_T(3U + 1.8t)}{U^2 t^2}$, along both edges remote from ends (this assumes t small compared with least radius of curvatore of median line)

Table 4.04 **Formulae for Stresses and Deformations in Pressure Vessels**

Notation for thin vessels: p = unit pressure (MPa); σ_1 = meridional membrane stress, positive when tensile (MPa); σ_2 = hoop membrane stress, positive when tensile (MPa); τ_s = shear stress (MPa); R = mean radius of circumference (mm); t = wall thickness (mm); E = modulus of elasticity (MPa); v = Poisson's ratio.

Notation for thick vessels: σ_1 = meridional wall stress, positive when acting as shown (MPa); σ_2 = hoop wall stress, positive when acting as shown (MPa); σ_3 = radial wall stress, positive when acting as shown (MPa); a = inner radius of vessel (mm); b = outer radius of vessel (mm); r = radius from axis to point where stress is to be found (mm); Δa = change in inner radius due to pressure, positive when representing an increase (mm); Δb = change in outer radius due to pressure, positive when representing an increase (mm). Other notation same as that used for thin vessels.

Form of vessel	Manner of loding	Formulas
Thin vessels – membrane stresses σ_1 (meridional) and σ_2 (hoop)		
Cylindrical 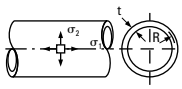	Uniform internal (or external) pressure p, MPa	$\sigma_1 = \frac{pR}{2t}$ $\sigma_2 = \frac{pR}{t}$ Radial displacement = $\frac{R}{E}(\sigma_2 - v\sigma_1)$. External collapsing pressure $p' = \frac{t}{R}\left(\frac{\sigma_y}{1 + 4\frac{\sigma_y}{E}\left(\frac{R}{t}\right)^2}\right)$ Internal bursting pressure $p_u = 2\,\sigma_u\,\frac{t}{R}$ Here σ_u = ultimate tensile strength, where σ_y = compressive yield point of material. This formula is for nonelastic failure, and holds only when $\frac{p'R}{t}$ > proportional limit.
Spherical 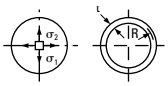	Uniform internal (or external) pressure p, MPa	$\sigma_1 = \sigma_2 = \frac{pR}{2t}$ Radial displacement = $\frac{\sigma_1}{E}(1 - v)\,R$
Thick vessels – membrane stresses σ_1 (meridional), σ_2 (hoop) and σ_3 (radial)		
Torus 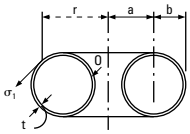	Complete torus under uniform internal pressure p, MPa	$\sigma_1 = \frac{pb}{t}\left(\frac{1 + a}{2r}\right)$ Max $\sigma_1 = \frac{pb}{t}\left(\frac{2a - b}{2a - 2b}\right)$ at 0 $\sigma_2 = \frac{pR}{2t}$ (uniform throughout)

Form of vessel	Manner of loding	Formulas
Thick vessels – wall stress σ_1 (longitudinal), σ_2 (circumferential) and σ_3 (radial)		
Cilindrical 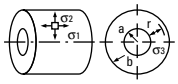	1. Uniform internal radial pressure p MPa (longitudinal pressure zero or externally balanced)	$\sigma_1 = 0$ $\sigma_2 = p\,\frac{a^2(b^2+r^2)}{r^2(b^2-a^2)}$. Max $\sigma_2 = p\,\frac{b^2+a^2}{b^2-a^2}$ at inner surface $\sigma_3 = -p\,\frac{a^2(b^2-r^2)}{r^2(b^2-a^2)}$. Max $\sigma_3 = -p$ at inner surface Max $\tau = p\,\frac{b^2}{b^2-a^2}$ at inner surface $\Delta a = p\,\frac{a}{E}\left(\frac{b^2+a^2}{b^2-a^2} + \nu\right)$; $\Delta b = p\,\frac{b}{E}\left(\frac{2a^2}{b^2-a^2}\right)$
	2. Uniform external radial pressure p MPa	$\sigma_1 = 0$ $\sigma_2 = -p\,\frac{a^2(b^2+r^2)}{r^2(b^2-a^2)}$. Max $\sigma_2 = -p\,\frac{2b^2}{b^2-a^2}$ at inner surface $\sigma_3 = -p\,\frac{b^2(r^2-a^2)}{r^2(b^2-a^2)}$. Max $\sigma_3 = -p$ at outer surface; Max $\tau = \frac{1}{2}$ max σ_2 at inner surface $\Delta a = -p\,\frac{a}{E}\left(\frac{2b^2}{b^2-a^2}\right)$; $\Delta b = -p\,\frac{b}{E}\left(\frac{a^2+b^2}{b^2-a^2} - \nu\right)$
	3. Uniform internal pressure p MPa in all directions (ends capped)	$\sigma_1 = p\,\frac{a^2}{b^2-a^2}$, σ_2 and σ_3 same as for Case 1. $\Delta a = p\,\frac{a}{E}\left[\frac{b^2+a^2}{b^2-a^2} - \nu\left(\frac{a^2}{b^2-a^2} - 1\right)\right]$; $\Delta b = p\,\frac{b}{E}\left[\frac{a^2}{b^2-a^2}(2-\nu)\right]$
Spherical 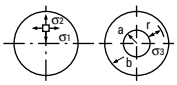	Uniform internal pressure p MPa	$\sigma_1 = \sigma_2 = p\,\frac{a^3(b^3+2r^3)}{2r^3(b^3-a^3)}$. Max σ_1 = max $\sigma_2 = p\,\frac{b^3+2a^3}{2(b^3-a^3)}$ at inner surface $\sigma_3 = -p\,\frac{a^3(b^3-r^3)}{r^3(b^3-a^3)}$. Max $\sigma_3 = -p$ at inner surface; Max $\tau = p\,\frac{3b^3}{4(b^3-a^3)}$ at inner surface $\Delta a = p\,\frac{a}{E}\left[\frac{b^3+2a^3}{2(b^3-a^3)}(1-\nu) + \nu\right]$; $\Delta b = p\,\frac{b}{E}\left[\frac{3a^3}{2(b^3-a^3)}(1-\nu)\right]$ Yield pressure $p_y = \frac{2\sigma_y}{3}\left(1 - \frac{a^3}{b^3}\right)$
	Uniform external pressure p MPa	$\sigma_1 = \sigma_2 = -p\,\frac{b^3(a^3+2r^3)}{2r^3(b^3-a^3)}$. Max σ_1 = – max $\sigma_2 = -p\,\frac{3b^3}{2(b^3-a^3)}$ at inner surface $\sigma_3 = -p\,\frac{b^3(r^3-a^3)}{r^3(b^3-a^3)}$. Max $\sigma_3 = -p$ at outer surface; $\Delta a = -p\,\frac{a}{E}\left[\frac{3b^3}{2(b^3-a^3)}(1-\nu)\right]$; $\Delta b = -p\,\frac{b}{E}\left[\frac{a^3+2b^3}{2(b^3-a^3)}(1-\nu) - \nu\right]$

Table 4.05 **Buckling of Columns, Rings and Arches**

E = modulus of elasticity, I = moment of inertia of cross section about central axis perpendicular to plane of buckling. All dimensions are in mm, all forces in N, all angles in radians.

Form of bar; manner of loading and support	Formulas for critical load F_c, or critical unit load q_c
Uniform straight bar under end load One end free, other end fixed 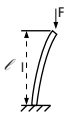	$F_c = \frac{\pi^2 EI}{4\ell^2}$
Uniform straight bar under end load Both ends hinged 	$F_c = \frac{\pi^2 EI}{\ell^2}$
Uniform straight bar under end load One end fixed, other end hinged and horizontally constrained over fixed end 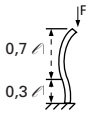	$F_c = \frac{\pi^2 EI}{(0.7\ell)^2}$
Uniform circular ring under uniform radial pressure q N·m. Mean radius of ring r. 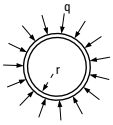	$q_c = \frac{3\,EI}{r^2}$
Uniform circular arch under uniform radial pressure q. Mean radius r. Ends hinged 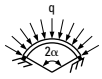	$q_c = \frac{EI}{r^3}\left(\frac{\pi^2}{\alpha^2} - 1\right)$
Uniform circular arch under uniform radial pressure q. Mean radius r. Ends fixed 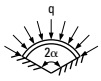	$q_c = \frac{EI}{r^3}(k^2 - 1)$ Where k depends on α and is found by trial from the equation: $k \tan \alpha \cot k\alpha = 1$ or from the following table: α = 15° 30° 45° 60° 75° 90° 120° 180° k = 17.2 8.62 5.80 4.37 3.50 3.00 2.36 2.00

Table 4.06 **Formulae for Flat Plates**

Notation: W = total applied load (N); p = unit applied load (MPa); t = thickness of plate (mm); σ = unit stress at surface of plate (MPa); y = vertical deflection of plate from original position (mm); θ = slope of plate measured from horizontal (rad); E = modulus of elasticity; ν = Poisson's ratio; r denotes the distance from the center of a circular plate. Other dimensions and corresponding symbols are indicated on figures.

Positive sign for σ indicates tension at upper surface and equal compression at lower surface; negative sign indicates reverse condition.

Positive sign for y indicates upward deflection, negative sign downward deflection. Subscripts r, t, a, and b used with σ denote respectively radial direction, tangential direction, direction of dimension a, and direction of dimension b.

All dimensions are in mm.

Manner of loading and Case No.	Formulas for stress and deflection
Edges supported Uniform load over entire surface 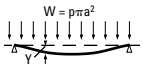 	Circular and solid 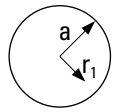 $(0 \le r \le a)$ (At r) $\sigma_r = -\frac{3W}{8\pi t^2}\left[(3+\nu)\left(1-\frac{r^2}{a^2}\right)\right]$ $\sigma_t = -\frac{3W}{8\pi t^2}\left[(3+\nu)-(1+3\nu)\frac{r^2}{a^2}\right]$ (At center) Max $\sigma_r = \sigma_t = -\frac{3W}{8\pi t^2}(3+\nu)$ Max $y = -\frac{3W(1-\nu)(5+\nu)a^2}{16\pi E t^3}$ (At edge) $\theta = \frac{3W(1-\nu)a}{2\pi E t^3}$
Edges fixed Uniform load over entire surface 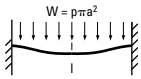 	(At r) $\sigma_r = \frac{3W}{8\pi t^2}\left[(3+\nu)\frac{r^2}{a^2}-(1+\nu)\right]$ $\sigma_t = \frac{3W}{8\pi t^2}\left[(3+\nu)\frac{r^2}{a^2}-(1+\nu)\right]$ (At edge) Max $\sigma_r = \frac{3W}{4\pi t^2}$; $\sigma_t = \nu\frac{3W}{4\pi t^2}$ (At center) $\sigma_r = \sigma_r = -\frac{3W(1+\nu)}{8\pi t^2}$ Max $y = -\frac{3W(1-\nu^2)a^2}{16\pi E t^3}$
Uniform load over entire surface 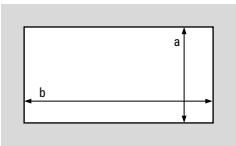 	Edges supported / Edges clamped At centre of plate: $\sigma = \frac{0.75\,a^2\,p}{t^2\left(1+1.61\frac{a^3}{b^3}\right)}$; $\sigma = \frac{0.167\,a^2\,p}{t^2}$ (a=b) At centre of edge: $\sigma = 0$; $\sigma = \frac{0.50\,a^2\,p}{t^2\left(1+0.623\frac{a^6}{b^6}\right)}$ Max y: $\frac{0.142\,a^4\,p}{Et^3\left(1+2.21\frac{a^3}{b^3}\right)}$; $\frac{0.0284\,a^4\,p}{Et^3\left(1+1.056\frac{a^5}{b^5}\right)}$

Manner of loading and Case No.	Formulas for stress and deflection
Edges supported Distributed load of intensity p over entire surface 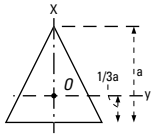 	Equilateral triangle, solid Max $\sigma_x = 0.1488\,\frac{pa^2}{t^2}$ at $y = 0$, $x = -0.062a$ Max $\sigma_y = 0.1554\,\frac{pa^2}{t^2}$ at $y = 0$, $x = 0.129a$ (values for $\nu = 0.3$) Max $y = \frac{pa^4\,(1-\nu^2)}{81Et^3}$ at centre O.
Edges supported Distributed load of intensity p over entire surface 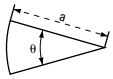 	Circular sector, solid Max $\sigma_r = ß\,\frac{pa^2}{t^2}$ Max $\sigma_1 = ß_1\,\frac{pa^2}{t^2}$ Max $y = \alpha\,\frac{pa^4}{Et^2}$ (values for $v = 0.3$) θ | 45° | 60° | 90° | 180° $ß$ | 0.102 | 0.147 | 0.240 | 0.522 $ß_1$ | 0.114 | 0.155 | 0.216 | 0.312 α | 0.0054 | 0.0105 | 0.0250 | 0.0870
Solid semicircular plate, uniform load p, all edges fixed 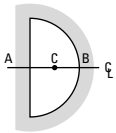 	Max $\sigma = \sigma_r$ in A $= \frac{0.42pa^2}{t^2}$ σ_r in B $= \frac{0.36pa^2}{t^2}$ Max $\sigma_t = \frac{0.21pa^2}{t^2}$ at C

Other Loads

Fatigue Resistance

When materials are stressed cyclically they tend to fail at levels of stress below their ultimate tensile strength. The phenomenon is termed ‘‘fatigue failure’’.

Fatigue resistance data (in air) for injection moulded material samples are shown in the product modules. These data were obtained by stressing the samples at a constant level at 1800 cpm and observing the number of cycles to failure at each testing load on a Sonntag-Universal testing machine.

Experiment has shown that the frequency of loading has no effect on the number of cycles to failure at a given level of stress, below frequencies of 1800 cpm. However, it is probable that at higher frequencies internal generation of heat within the specimen may cause more rapid failure.

Impact Resistance

End-use applications of materials can be divided into two categories.

– Applications where the part must withstand impact loadings on only a few occasions during its life.

– Applications where the part must withstand repeated impact loadings throughout its life.

Materials considered to have good impact strength vary widely in their ability to withstand repeated impact. Where an application subject to repeated impact is involved, the designer should seek specific data before making a material selection. Such data can be found in the product modules for DELRIN® resin and ZYTEL® resin, both of which demonstrate excellent resistance to repeated impact.

The energy of an impact must either be absorbed or transmitted by a part, otherwise mechanical failure will occur. Two approaches can be used to increase the impact resistance of a part by design:

– Increase the area of load application to reduce stress level.

– Dissipate shock energy by designing the part to deflect under load.

Designing flexibility into the part significantly increases the volume over which impact energy is absorbed. Thus the internal forces required to resist the impact are greatly reduced.

It should be emphasized that structural design for impact loading is usually a very complex and often empirical exercice. Since there are specific formulations of engineering materials available for impact applications, the designer should work around the properties of these materials during the initial drawing stage, and make a final selection via parts from a prototype tool which have been rigorously tested under actual end-use conditions.

Thermal Expansion and Stress

The effects of thermal expansion should not be overlooked in designing with thermoplastics.

For unreinforced plastic materials, the thermal expansion coefficient may be six to eight times higher than the coefficient of most metals. This differential must be taken into account when the plastic part is to function in conjunction with a metal part. It need not be a problem if proper allowances are made for clearances, fits, etc.

For example, if a uniform straight bar is subjected to a temperature change ΔT, and the ends are not constrained, the change in length can be calculated from:

$$\Delta L = \Delta T \times \alpha \times L$$

where:

ΔL	= change in length	(mm)
ΔT	= change in temperature	(°C)
α	= thermal expansion coefficient	(mm/mm°C)
L	= original length	(mm)

If the ends are constrained, the stress developed is:

$$\sigma = \Delta T \times \alpha \times E$$

where:

σ	= compressive stress	(MPa)
E	= modulus	(MPa)

When a plastic part is constrained by metal, the effect of stress relaxation as the temperature varies must be considered, since the stiffer metal part will prevent the plastic part from expanding or contracting, as the case may be.

The thermal stresses in a plate constrained at the edges are given by:

$$\sigma = \Delta T \times \alpha \times E / (1 - \nu)$$

with: ν = Poissons ratio

Long Term Loads

Plastic materials under load will undergo an initial deformation the instant the load is applied and will continue to deform at a slower rate with continued application of the load. This additional deformation with time is called ‘‘creep’’.

Creep, defined as strain (%) over a period of time under constant stress, can occur in tension, compression, flexure or shear. It is shown on a typical stress-strain curve in Fig. 4.01.

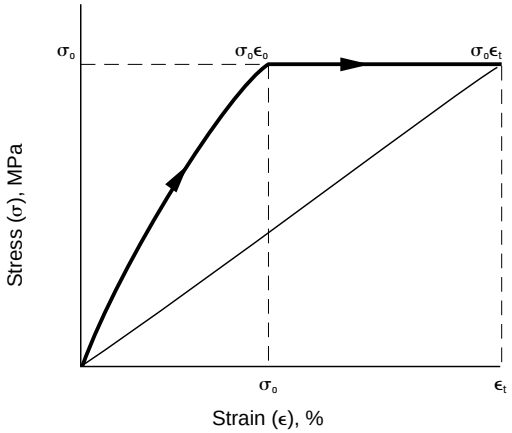

Creep between time t and $t_o = \epsilon_t - \epsilon_o$%. The creep modulus E_c for design in creep applications at stress σ_o and time t is the slope of the secant from the origin to the point ($\sigma_o\ \epsilon_t$).

Fig. 4.01 **Creep**

The stress required to deform a plastic material a fixed amount will decay with time due to the same creep phenomenon. This decay in stress with time is called stress relaxation.

Stress relaxation is defined as the decrease, over a given time period, of the stress (MPa) required to maintain constant strain. Like creep, it can occur in tension, compression, flexure or shear. On a typical stress-strain curve it is shown in Fig. 4.02.

Laboratory experiments with injection moulded specimens have shown that for stresses below about ⅓ of the ultimate tensile strength of the material at any temperature, the secant moduli in creep and relaxation at any time of loading may be considered similar for engineering purposes. Furthermore, under these conditions, the secant moduli in creep and relaxation in tension, compression and flexure are approximately equal.

A typical problem using creep data found in the properties sections is shown below:

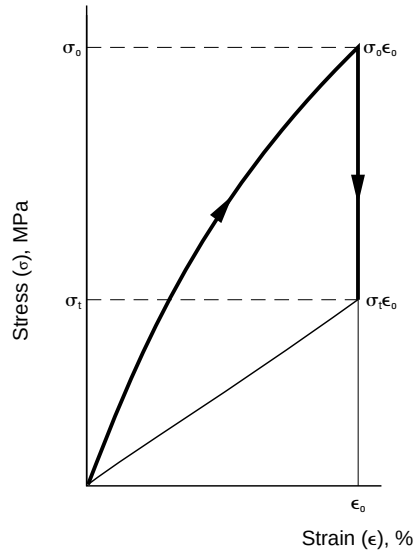

Relaxation between time t and $t_o = \sigma_o - \sigma_t$. The relaxation modulus E_R for design in relaxation applications (e.g., press fits) at time T is the slope of the secant from the origin to the point ($\sigma_t\ \epsilon_o$).

Fig. 4.02 **Relaxation**

Cylinder under Pressure

Example 1: A Pressure Vessel Under Long Term Loading

As previously noted, it is essential for the designer to itemise the end-use requirements and environment of a part before attempting to determine its geometry. This is particularly true of a pressure vessel, where safety is such a critical factor. In this example, we will determine the side wall thickness of a gas container which must meet these requirements:

a) retain pressure of 0,7 MPa;

b) for 10 years;

c) at 65° C.

The inside radius of the cylinder is 9 mm and the length is 50 mm. Because the part will be under pressure for a long period of time, one cannot safely use short-term stress-strain data but should refer to creep data or, preferably, longterm burst data from actual pressure cylinder tests. Data typical of this sort for 66 nylons is shown in Fig. 4.03 which plots hoop stress versus time to failure for various moisture contents at 65° C. Actually, ZYTEL® 101 would be a good candidate for this application as it has high impact strength in the 50% RH stabilized condition and the highest yield strength of unreinforced nylons.

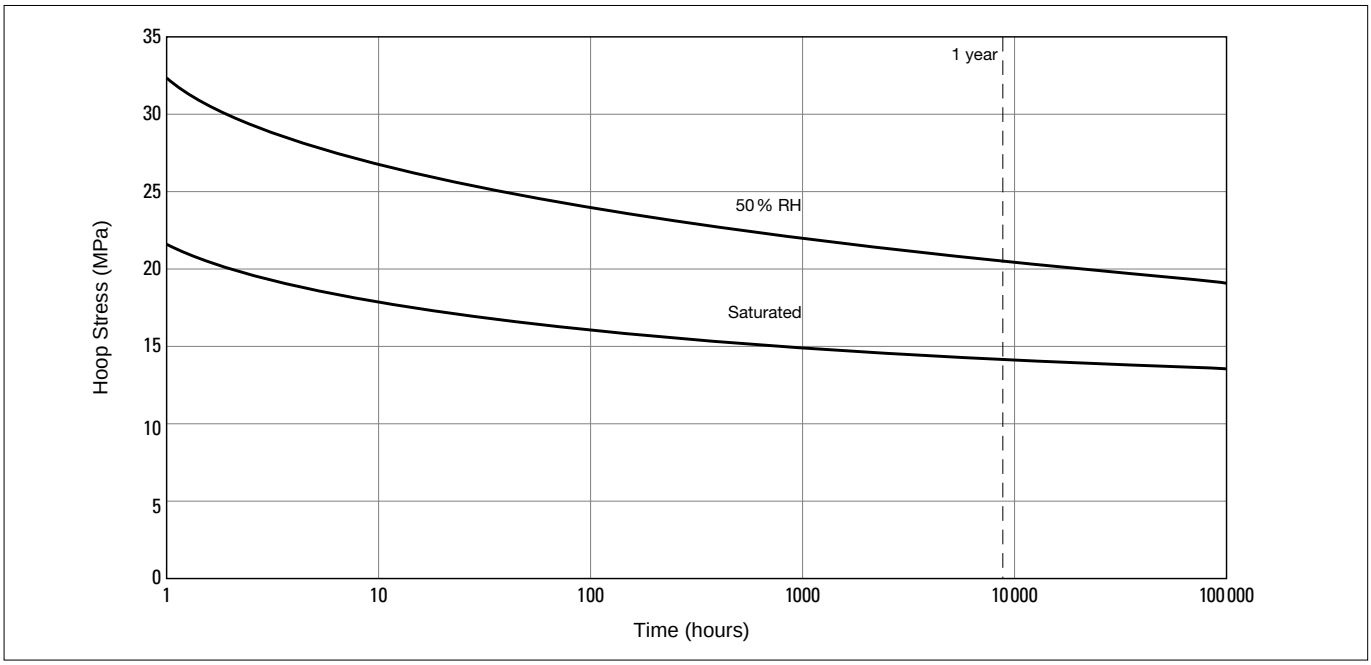

Fig. 4.03 **Hoop stress vs. time to failure, ZYTEL® 101 at 50 % RH and at saturation 65° C**

Referring to the curve, we find a hoop stress level of 19 MPa at 10 years, and this can be used as the design stress. The hoop stress formula for a pressure vessel is:

$$t = \frac{Pr}{\sigma} \times F.S.$$

where:

- t = wall thickness, mm
- P = internal pressure, MPa
- r = inside diameter, mm
- σ = design hoop stress, MPa
- F.S. = factor of safety = 3 (example)

$$t = \frac{(0{,}7)\ (9)\ (3)}{19} = 1{,}0 \text{ mm}$$

The best shape to use for the ends of the cylinder is a hemisphere. Hemispherical ends present a design problem if the cylinder is to stand upright. A flat end is unsatisfactory, as it would buckle or rupture over a period of time. The best solution, therefore, is to mould a hemispherical end with an extension of the cylinder or skirt to provide stability (Fig. 4.04).

For plastic parts under long term loads, stresses, deflections, etc. are calculated using classical engineering formula with data from the creep curves. The Elastic or Flexural Modulus is not used but rather the Apparent Modulus in equation form:

$$E(APP.) = \frac{\sigma}{\epsilon_o + \epsilon_f} = \frac{\sigma}{\epsilon_t}$$

dans laquelle:

- σ = valeur de la contrainte considérée (MPa)
- ϵ_o = déformation initiale (%/100)
- ϵ_f = fluage (%/100)

For the strains in the above equation, there often can be written:

$$\epsilon_o + \epsilon_f = \frac{\sigma}{E_o} + \frac{\sigma}{E_o} At^B = \frac{\sigma}{E_o}(1 + At^B)$$

with: E_o = initial modulus at design conditions
t = time (h)
A, B = material constants

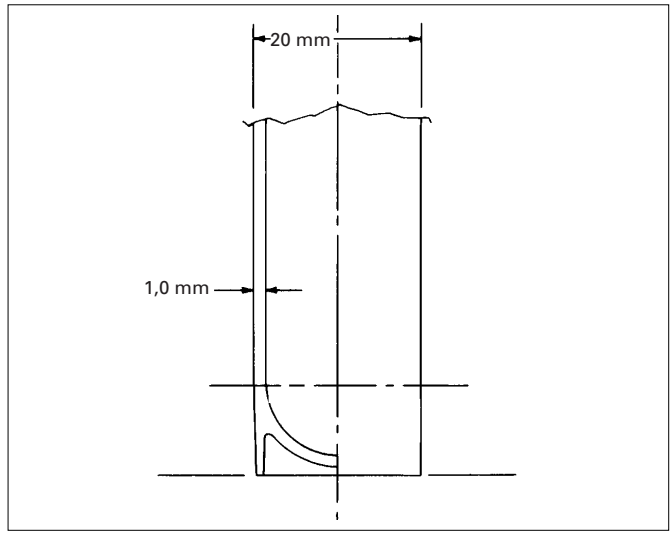

Fig. 4.04 **Design for a pressure vessel under long terme loading**

Tensile Loads

Long Term – Examples

Determine the stress and elongation of the tubular part shown in Fig. 4.05 after 1000 hours.

Material = ZYTEL® 101, 23° C, 50% RH

Tensile Loading = 1350 N

Outside Diameter = 25 mm

Wall Thickness = 1,3 mm

Length = 152 mm

$$\text{Stress} = \frac{F}{A} =$$

$$\frac{4\,F}{\pi\,(Do^2 - Di^2)} = \frac{(4)\,(1350)}{\pi\,(25^2 - 22{,}4^2)} = 14\ \text{MPa}$$

From Fig. 4.06 at 14 MPa and 1000 hours, the strain is 3%. Therefore, the elongation equals:

$L \times \Delta L = 152 \times 0{,}03 = 4{,}57$ mm.

(In this example there was assumed, that the creep in tension is equal to creep in flexure, which is not always correct.)

Ribs and Strengthening Members

Ribs can be used to augment greatly the section stiffness of simple beams. Often, thick sections can be replaced by sections of smaller cross-sectional area (such as "T" beams) with significant savings in material. However, checks should be made to ensure that acceptable design stress levels for the material are observed.

The designer must take great care in using ribs in a moulded part. Where they may provide the desired stiffness, it is also possible that the ribbing will distort the part after moulding. Therefore, they should be specified with caution as it is easier and cheaper to add ribs to a mould than it is to remove them.

Ribs and strengthening members should be ½ – ⅔ as thick as the walls they reinforce and deep ribs may require ¼ – ½° of taper for easy ejection from the mould (see Table 3.01). The reasons for using a thinner wall for the ribs are two: to minimize sink marks in the exterior surface caused by increased shrinkage at the intersection of rib and wall; and to prevent part distortion which again could be caused by the heavier section of the intersection. Figure 4.07 illustrates this effect.

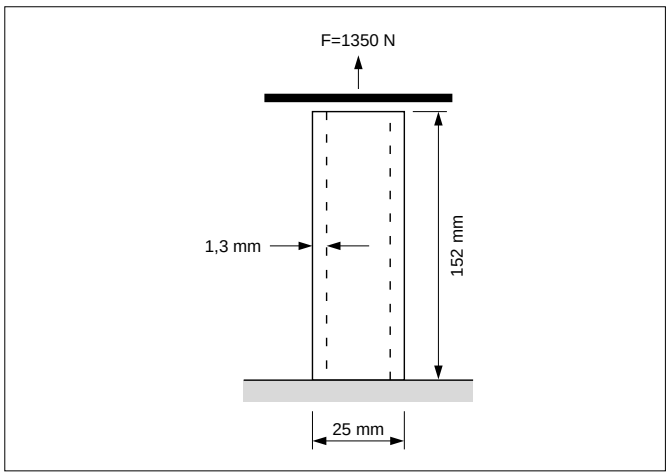

Fig. 4.05 **Example of creep in tubular part**

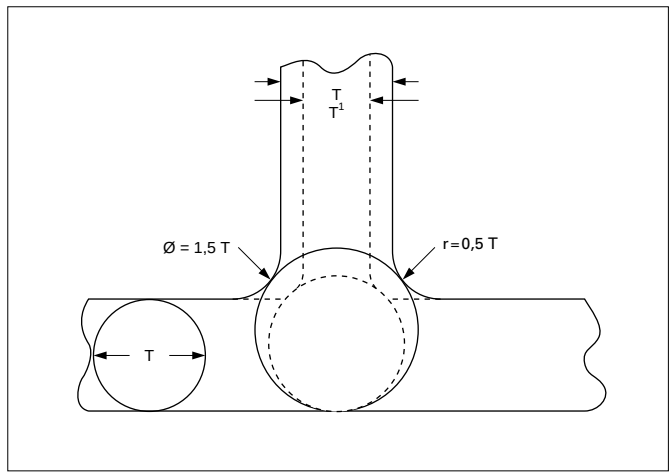

Fig. 4.07 **Rib dimensions**

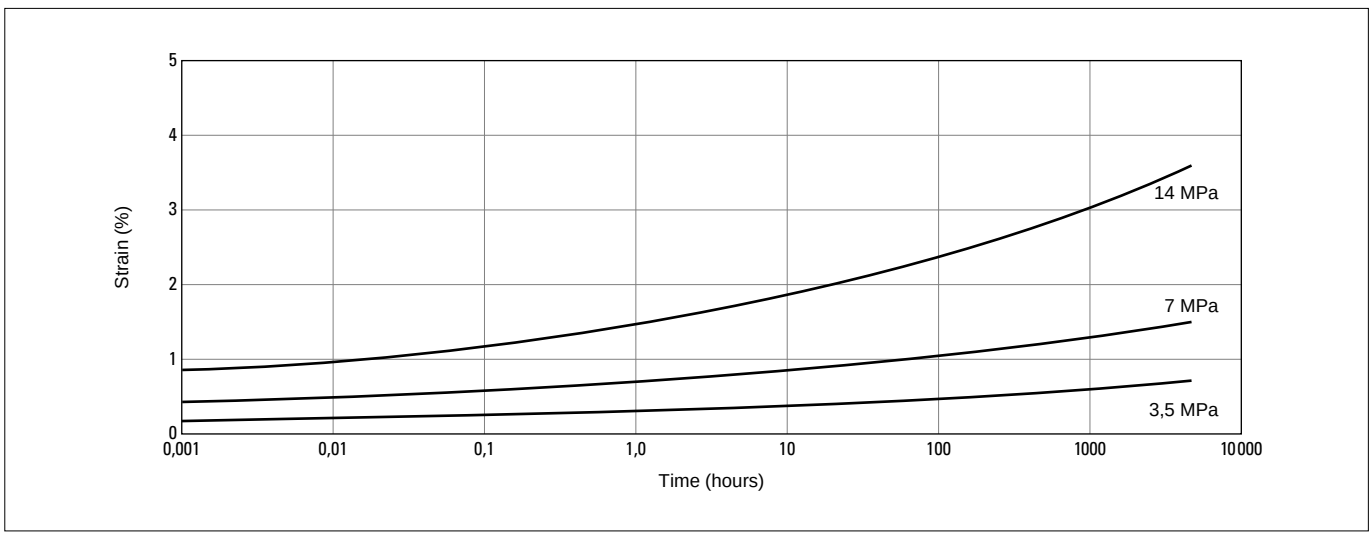

Fig. 4.06 **Creep in flexure of ZYTEL® 101, 23° C, 50% RH; ($\epsilon_t = \sigma\,(1 + 0.65\,t^{0.2}) / E_o$; E_o = 1550 MPa)**

By drawing a circle at the intersection of the rib and wall, a means is obtained to compare section thickness. A rib thickness (T) equal to the wall thickness, combined with a radius of 0,5 T, produces a circle with a diameter of 1,5 T or 50 per cent greater thant the wall thickness. Increasing the radius beyond 0,5 T would not significantly strengthen the corners, but would enlarge the inscribed circle, making the possibility of having voids in this area greater than if the radius remained 0,5 T. However if the rib is made thinner than the wall (dotted lines in Fig. 4.07) the radius in the corners can be in proper proportion to the new rib thickness, T^1, to prevent high stress concentration and voids at the juncture, without enlarging the diameter of the enclosed circle.

Since ribbing is in such widespread use as a method to improve structure and to reduce cost and weight, simplified methods have been developed to determine the rib size and spacing necessary to provide a specified degree of rigidity. Most housings – tape cassettes, pressure containers, meter shrouds, and just plain boxes – have one functional requirement in common: the need for rigidity when a load is applied. Since rigidity is directly proportional to the moment of inertia of the housing cross section, it is physically simple (though sometimes mathematically complex) to replace a constant wall section part with a ribbed structure with the same rigidity but less weight. To simplify such analysis, the curve in Fig. 4.08 has been developed to help determine the feasibility of using a ribbed structure in a product (background, see Table 4.01).

Bidirectional ribbing

The curve in Fig. 4.08 describes the dimensional relationship between simple flat plates and cross-ribbed plates (Fig. 4.09) having identical values of moment of inertia. The base of the graph shows values from 0 to 0,2 for the product of the non-ribbed wall thickness (t_A) and the number of ribs per mm (N) divided by the width of the plate (W). The W value was taken as unity in the deveopment of the curve, thus it is always one (1).

It should be noted that the rib thickness was equated to that of the adjoining wall (t_B). However, if thinner ribs are desired to minimize sinks, their number and dimensions can easily be obtained. For example, if the ribs were 2,5 mm thick and spaced 25 mm apart, ribs which are 1,25 mm thick and spaced 12,5 mm apart would provide equivalent performance.

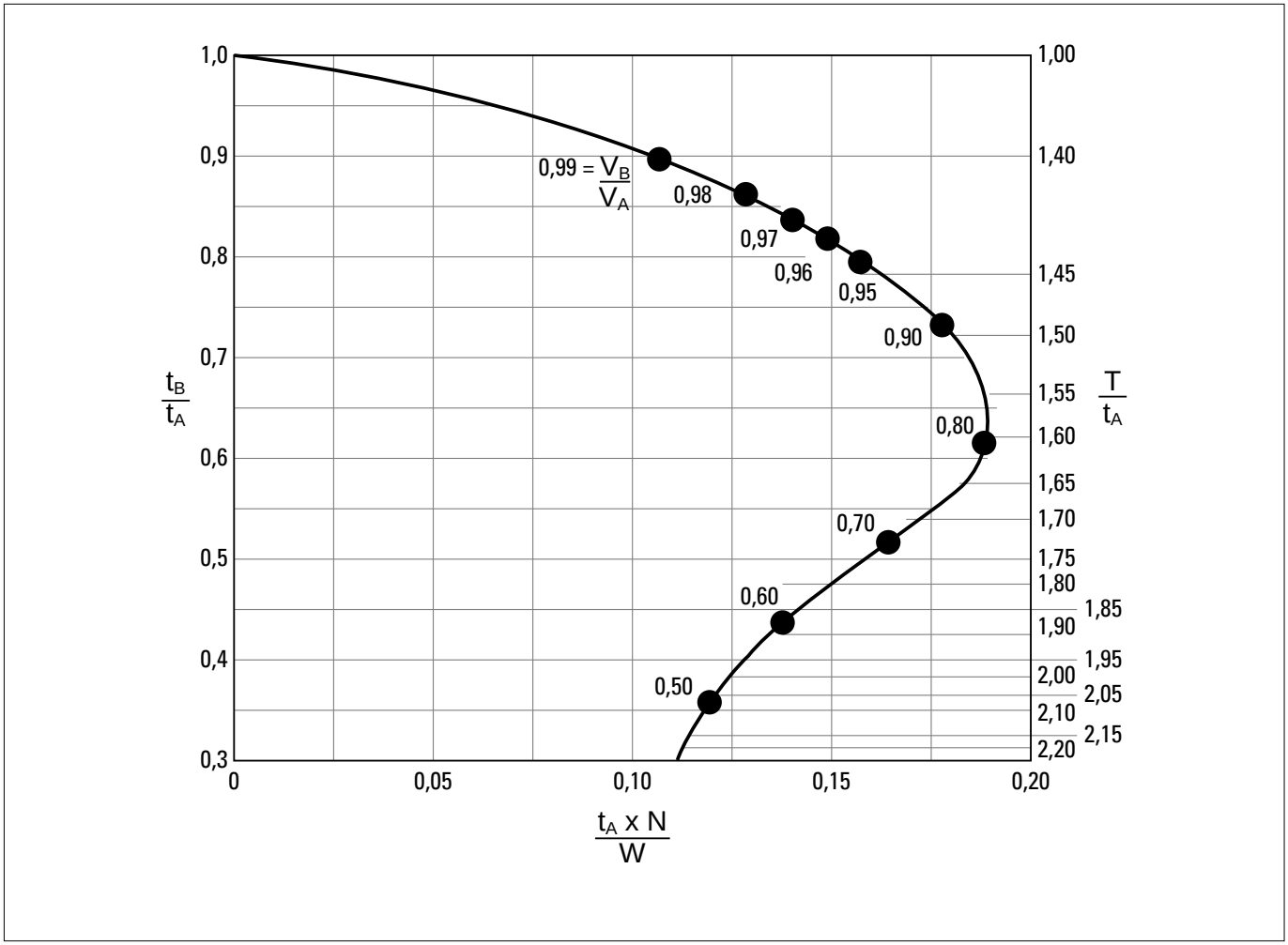

Fig. 4.08 **Ribbed plate calculator (bidirectional)**

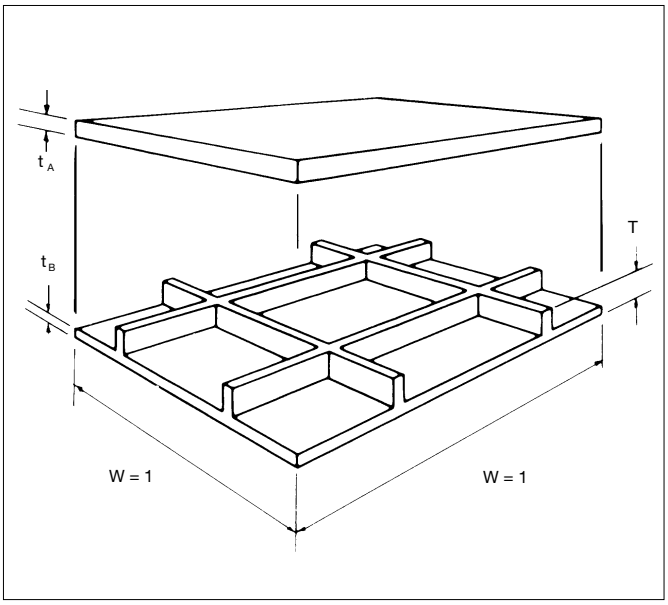

Fig. 4.09 **Equivalent flat plate and ribbed structure**

The left hand ordinate shows values from 0,3 to 1,0 for the ratio of the ribbed wall thickness (t_B) to the non-ribbed wall thickness (t_A). The right hand ordinate shows the values from 1,0 to 2,2 for the ratio of the overall thickness of the ribbed part (T) to the non-ribbed wall thickness (t_A).

Ratios of the volume of the ribbed plate (V_B) to the volume of the corresponding flat plate (V_A) are shown along the curve at spacings suitable for interpolation. For any one combination of the variables T, t_B, and N, these volume ratios will specify the minimum volume of material necessary to provide a structure equivalent to the original unribbed design, as shown in the following examples.

Example 1 – If there are no restrictions on the geometry of the new cross-ribbed wall design, the curve can be used to determine the dimension that will satisfy a required cost reduction in part weight.

Known: Present wall thickness (t_A) = 4,5 mm

Required: Material reduction equals 40%

or $\frac{V_B}{V_A} = 0{,}60$

From Fig. 4.08

$\frac{(t_A)\,(N)}{W} = 0{,}135$, or $N = \frac{0{,}135 \times 1}{4{,}5} = 0{,}03$ ribs per mm or about 3 ribs per 100 mm

$\frac{t_B}{t_A} = 0{,}44$, or $t_B = (0{,}44)\,(4{,}5) = 2{,}0$ mm

$\frac{T}{t_A} = 1{,}875$, or T = (1,875) (4,5) = about 8,5 mm

Example 2 – If moulding flow of the resin limits the redesigned wall thickness, part geometry can be calculated as follows:

Known: Present wall thickness (t_A) = 2,5 mm

Required: Minimum wall thickness (t_B) = 1,0 mm

or $\frac{t_B}{t_A} = \frac{1{,}0}{2{,}5} = 0{,}4$

From Fig. 4.08

$\frac{T}{t_A} = 1{,}95$, or T = (1,95) (2,5) = 5,0 mm

$\frac{(t_A)\,(N)}{W} = 0{,}125$, or $N = \frac{0{,}125 \times 1}{2{,}5} = 0{,}05$ ribs per mm or 1 rib per 20 mm

$\frac{V_B}{V_A} = 0{,}55$

Thus, the 1,0 mm wall design has an overall height of 5,0 mm, a rib spacing of 0,1 per mm (or 1 rib every 20 mm) and provides a 45 per cent material saving.

Example 3 – If the overall wall thickness is the limitation because of internal or exterior size of the part, other dimensions can be found on the curve:

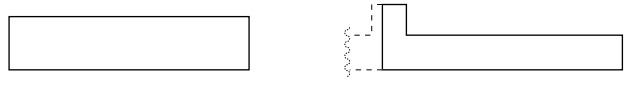

Known: Present wall thickness (t_A) = 6,5 mm

Required: Maximum height of ribbed wall (T) = 10,8 mm

or $\frac{T}{t_A} = \frac{10{,}8}{6{,}5} = 1{,}66$

From Fig. 4.08

$\frac{(t_A)\,(N)}{W} = 0{,}175$, or $N = \frac{0{,}175 \times 1}{6{,}5} = 0{,}027$ ribs per mm or 1 rib per 37 mm

$\frac{t_B}{t_A} = 0{,}56$, or $t_B = (0{,}56)\,(6{,}5) = 3{,}65$ mm

$\frac{V_B}{V_A} = 0{,}76$

The ribbed design provides a material reduction of 24 per cent, will use 0,27 ribs per mm (1 rib every 37 mm) and will have a wall thickness of 3,65 mm. If thinner ribs are desired for functional or appearance reasons, the same structure can be obtained by holding the product of the number of ribs and the rib thickness constant.
In this example, if the rib wall thickness were cut in half to 1,8 mm, the number of ribs should be increased from 1 every 37 mm to 2 every 37 mm.

Example 4 – If the number of ribs per cm is limited because of possible interference with internal components of the product, or by the need to match rib spacing with an adjoining structure or decorative elements, the designer can specify the number of ribs and then determine the other dimensions which will provide a minimum volume.

Known: Present wall thickness (t_A) = 4,0 mm

Required: Ribs per mm (N) = 0,04 ribs per mm or 4 ribs per 100 mm

Therefore, for a base (W) of unity:

$$\frac{(t_A)\,(N)}{W} = \frac{(4{,}0)\,(0{,}04)}{1} = 0{,}16$$

From Fig. 4.08

$$\frac{t_B}{t_A} = 0{,}5, \text{ or } t_B = 0{,}5 \times 4{,}0 = 2{,}0 \text{ mm}$$

$$\frac{T}{t_A} = 1{,}75, \text{ or } T = 1{,}75 \times 4{,}0 = \text{about } 7{,}0 \text{ mm}$$

$$\frac{V_B}{V_A} = 0{,}68$$

The resulting design has an overall height of 7,0 mm, a wall thickness of about 2,0 mm and a material saving of 32 per cent. (An alternate solution obtained with a V_B/V_A value of 0,90 provides a material saving of only 10 per cent. The choice depends on the suitability of wall thicknesses and overall height.)

Unidirectional Ribbing

Curves have been developed which compare by means of dimensionless ratios, the geometry of flat plates and unidirectional ribbed structures of equal rigidity. The thickness of the unribbed wall, typically, would be based on the calculations an engineer might make in substituting plastic for metal in a structure that must withstand a specified loading. When the wide, rectangular cross section of that wall is analyzed, its width is divided into smaller equal sections and the moment of inertia for a single section is calculated and compared with that of its ribbed equivalent. The sum of the small section moments of inertia is equal to that of the original section.

The nomenclature for the cross-section are shown below:

$t = T - 2H \tan \alpha$

$$A \text{ (area)} = BW + \frac{H\,(T+t)}{2}$$

W_d = Thickness for deflection

W_S = Thickness for stress

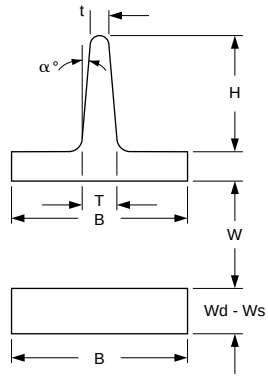

To define one of the smaller sections of the whole structure, the term BEQ is used.

$$BEQ = \frac{\text{total width of section}}{\text{number of rib}} = \frac{B}{N}$$

Based on the moment of inertia equations for these sections, the thickness ratios were determined and plotted. These calculations were based on a rib thickness equal to 60 per cent of the wall thickness. The curves in Figures 4.10 and 4.11 are given in terms of the wall thickness ratio for deflection (W_d/W) or thickness ratio for stress (W_S/W).

The abscissae are expressed in terms of the ratio of rib height to wall thickness (H/W). The following problems and their step by step solutions illustrate how use of the curves can simplify deflection and stress calculations.

Problem 1

A 4 mm thick copper plate, fixed at one end and subject to a uniform loading of 320 N, is to be replaced by a plate moulded in DELRIN® acetal resin. Determine the equivalent ribbed section for the new plate; dimensions, see sketch below.

Flex modulus for copper:
E_C = 105 000 MPa

Flex modulus for DELRIN® acetal resin
E_D = 3000 MPa

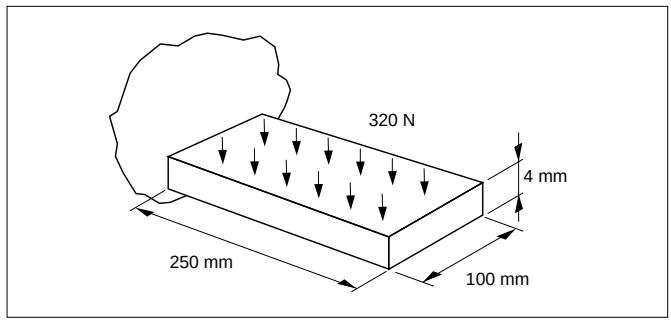

The wall thickness for a plate in DELRIN® acetal resin with equivalent stiffness is calculated by equating the product of the modulus and moment of inertia of the two materials.

$$E_C \times W_C^3 = E_D \times W_d^3$$

Thus: $W_d = 13$ mm.

Since a wall thickness of 13 mm is not ordinarily considered practical for plastic structures, primarily because of processing difficulties, a ribbed section is recommended. Therefore, assume a more reasonable wall of 3 mm, and compute for a plate with nine equally spaced ribs, rib height, deflection and stress.

$$\frac{W_o}{W} = \frac{13}{3} = 4{,}33$$

$$BEQ = \frac{B}{N} = \frac{100}{9} = 11{,}1 \qquad \frac{BEQ}{W} = \frac{11{,}1}{3} = 3{,}7$$

From the deflection graph (Fig. 4.10) we obtain:

$$\frac{H}{W} = 5{,}7 \qquad H = 5{,}7 \times 3 = 17{,}1 \text{ mm}$$

From the stress graph (Fig. 4.11) for $\frac{H}{W} = 5{,}7$ and

$\frac{BEQ}{W} = 3{,}7$ we obtain:

$$\frac{W_s}{W} = 2{,}75 \qquad W_s = 2{,}75 \times 3 \text{ mm} = 8{,}25 \text{ mm}$$

Determine the moment of inertia and section modulus for the ribbed area.

$$I = B\,\frac{W_D^3}{12} = \frac{100 \times 13^3}{12} = 18\,300 \text{ mm}^4$$

$$Z = \frac{BW_s^2}{6} = \frac{100 \times 8{,}25^2}{6} = 1130 \text{ mm}^3$$

Maximum deflection at the free end:

$$\delta \max = \frac{FL^3}{8\,EI} = \frac{320 \times 250^3}{8 \times 3000 \times 18\,300} = 11{,}4 \text{ mm}$$

Maximum stress at the fixed end:

$$\sigma \max = \frac{FL}{2\,Z} = \frac{320 \times 250}{2 \times 1130} = 35{,}4 \text{ MPa}$$

Since DELRIN® acetral resin has a tensile strength value of 69 MPa a safety factor of 2 is obtained.

Problem 2

Determine deflection and stress for a structure as shown made of RYNITE® 530 thermoplastic polyester resin; supported at both ends.

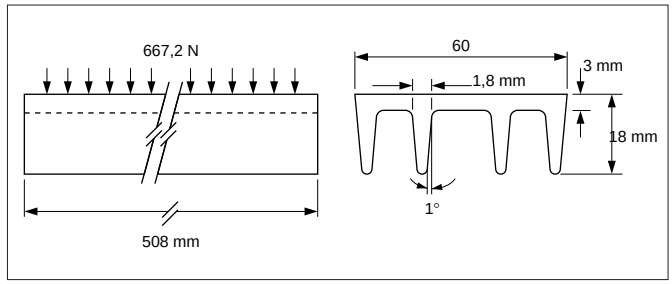

Substitute the known data:

$$BEQ = \frac{B}{N} = \frac{60}{4} = 15 \qquad \frac{BEQ}{W} = \frac{15}{3} = 5$$

$$H = 18 - 3 = 15 \qquad \frac{H}{W} = \frac{15}{3} = 5$$

From the graphs

$$\frac{W_d}{W} = 3{,}6 \qquad W_d = 3{,}6 \times 3 = 10{,}8$$

$$\frac{W_s}{W} = 2{,}25 \qquad W_s = 2{,}25 \times 3 = 6{,}75 \text{ mm}$$

$$I = \frac{BW_d^3}{12} = \frac{60 \times 10{,}8^3}{12} = 6300 \text{ mm}^4$$

$$Z = \frac{BW_d^2}{6} = \frac{60 \times 6{,}75^2}{6} = 455 \text{ mm}^3$$

$$\delta \max = \frac{5}{384} \times \frac{FL^3}{EI} = \frac{5 \times 667{,}2 \times 508^3}{384 \times 9000 \times 6300} = 20 \text{ mm}$$

$$\sigma \max = \frac{FL}{8\,Z} = \frac{667{,}2 \times 508}{8 \times 455} = 93 \text{ MPa}$$

Since RYNITE® 530 has a tensile strength value of 158 MPa, there will be a safety factor of approximately 1,7.

Remark: Ribs having a height exceeding 5 times their thickness and subject to higher compression stresses, should be checked on danger for buckling (instability).

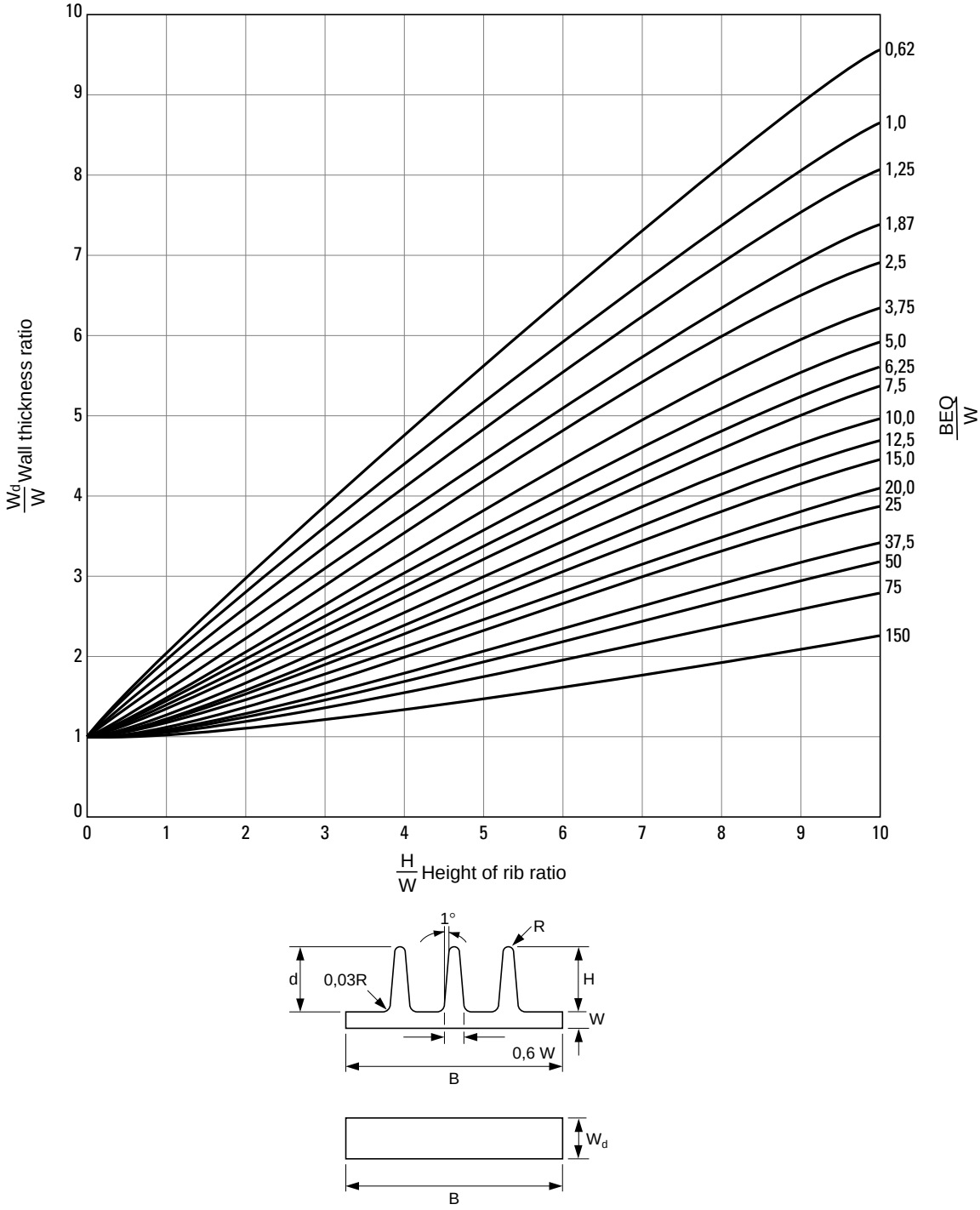

Fig. 4.10 **Deflection curves**

The computer programmed curves in this graph above, plotted for rib thicknesses equal to 60 per cent of wall thickness, are presented as an aid in calculating maximum deflection of a ribbed structure.
(For other rib thicknesses, use formulae of Tables 4.01 and 4.02).

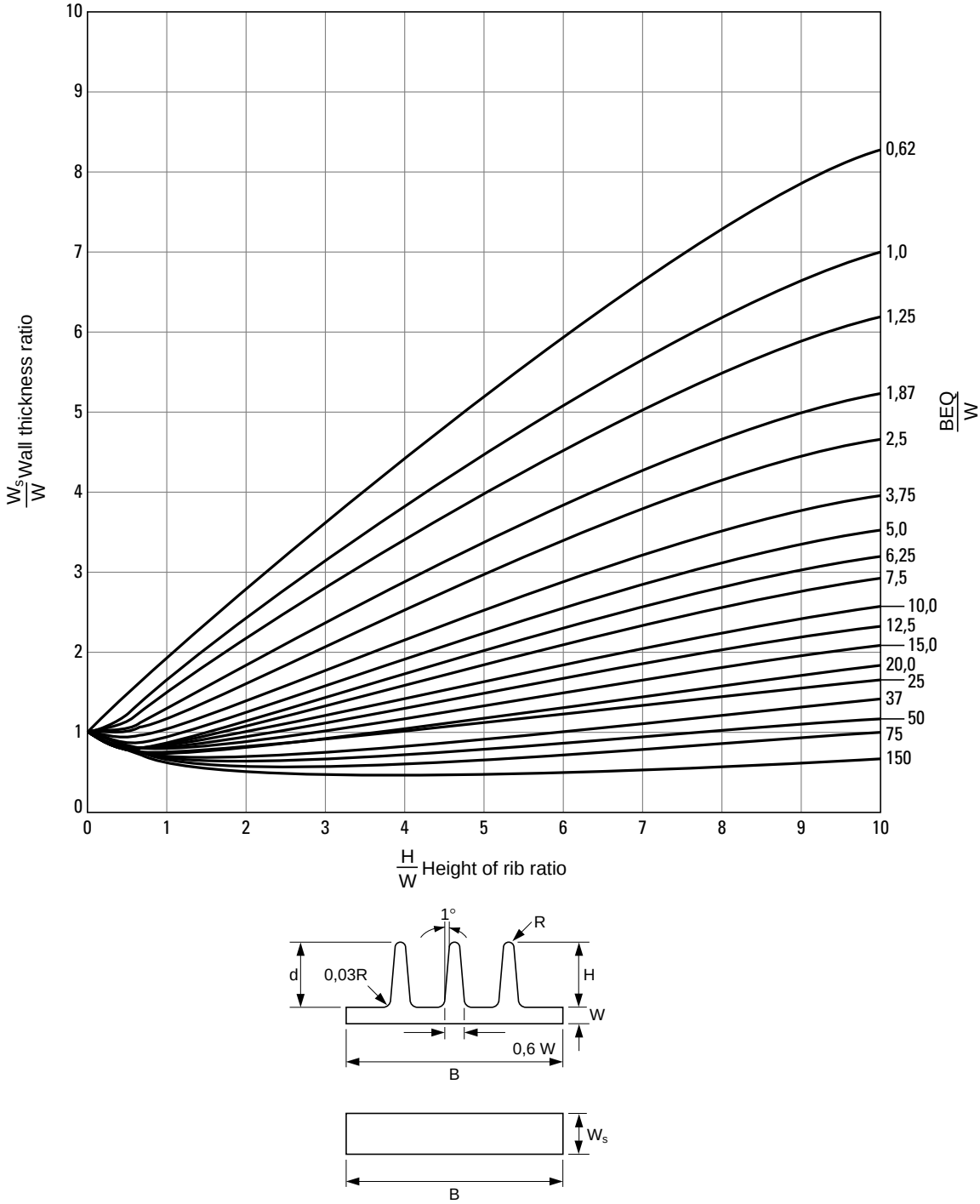

Fig. 4.11 **Stress curves**

The computer programmed curves in this graph above, plotted for rib thickness equal to 60 per cent of wall thickness, are presented as an aid in calculating the maximum stress tolerance of a ribbed structure.

5 – Design Examples

Redesigning the Wheel

Rotating parts of plastics – gears, pulleys, rollers, cams, dials, etc. – have long been a mainstay of industry.
It is only recently that the design potential of plastics has been considered for larger rotating parts such as bicycle, motorcycle and even automobile wheels. Since the type of loading may be substantially different, it seems appropriate to review some of the considerations which must be taken into account when designing a wheel in plastic – particularly in the rim and web or spoke area.

Web and Spoke Design

From a moulder's viewpoint, the ideal wheel would have a constant wall thickness throughout to facilitate filling and to provide uniform cooling in the mould. In place of spokes, the area between the hub and the rim would be a solid web to provide symmetrical resin flow to the rim and to perclude weld lines at the rim. Actually, wheels of this sort have found commercial application, though with slight modifications for structural improvement.

The wheel and the pulley shown in Fig. 5.01 typify this type of design. The 114 mm diameter pulley of DELRIN® acetal resin replaces a die cast part at a lower cost and weight.

While the web is solid, axial stability is provided by the corrugated surface. This web form was chosen over radial ribbing because it does not produce the heavy wall developed by ribbing (Fig. 5.02) and the resultant differential in radial shrinkage, nor is there as great a possibility of air entrapment during moulding.

When spokes are necessary – where side wind loading is critical or minimum surface area is desired – care should be taken in specifying the number of spokes and the wall thickness and in designing the juncture of the spokes with rim and hub. The greater the number of spokes the better. For example, if five spokes with a wall thickness twice that of the hub and rim were used, differential shrinkage could lead to out-of-roundness at the rim. On the other hand, ten spokes of the same wall thickness would provide the structure required as well as uniform shrinkage.

Also, the smaller the distance between spokes at the rim, the less the variation in rim rigidity as it rotates. Since the deflection of the rim will vary as the cube of the distance between the spoke support points, doubling the number of spokes will reduce the deflection by a factor of eight for a given rim cross section. The wall thickness of the spoke should be constant between the hub and rim to provide balanced cooling. Ribbing for axial reinforcements should be added to the edges of the spokes for minimum change in wall section (Fig. 5.03).

Spokes should be contoured into the hub and rim to improve flow in moulding and reduce stress concentration at the juncture. This is particularly important at the rim as such contouring will reinforce the rim, thus reducing deflection under load.

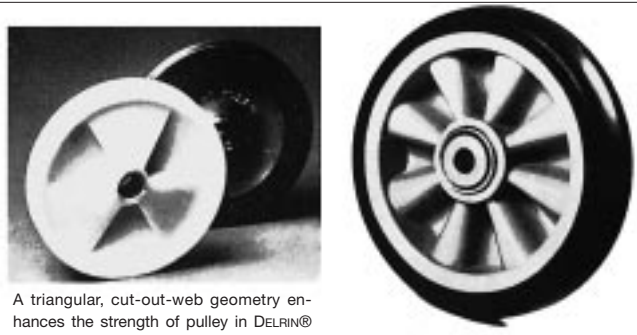

A triangular, cut-out-web geometry enhances the strength of pulley in DELRIN® (foreground) while holding its cost to 27 ¢ – a hefty saving over $3 tag for zinc pulleys.

Axial stability in this nylon wheel is provided by its corrugated web.

Fig. 5.01 **Typical web design for plastic wheels**

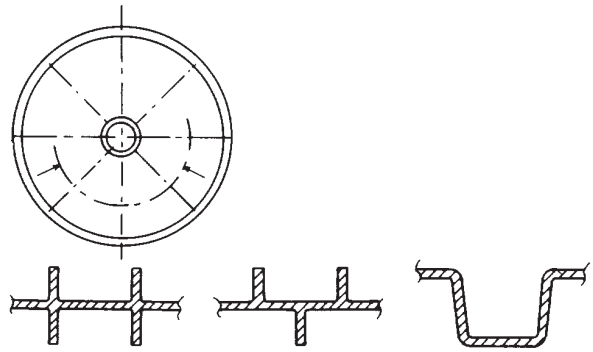

Usual rib design with large increase in wall thickness at intersection.

Staggered rib design with small increase in wall thickness at intersection.

Corrugated rib design with minimum increase in wall thickness.

Fig. 5.02 **Wheel design with ribs versus web**

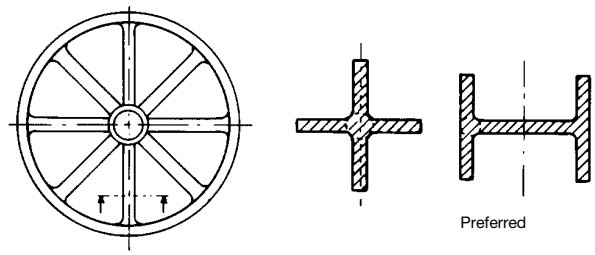

Fig. 5.03 **Design of wheel spokes**

Rim Design

Rim design requirements will vary depending upon whether or not a tire is used and whether the tire is solid or pneumatic.

Tireless wheels are frequently used on material handling equipment where vibration and noise are not critical.

Impact resistance is of prime importance in this type of service, and rims are frequently moulded with wall thickness up to 9,5 mm. The lengthened moulding cycle can increase processing costs to a point where it can be more economical to mould a wheel in a thinner wall and – using the wheels as an insert – mould an elastomeric tire around it.

If a pneumatic tire is used, the rim will be under constant pressure and the effect of creep on rim geometry must be taken into account. It can be shown that the outward force exerted on the rim is a product of the pressure in the tire and the radius of the tire cross section, plus the direct pressure force on the rim itself. Referring to Fig. 5.04 A the stresses in the critical cross section are:

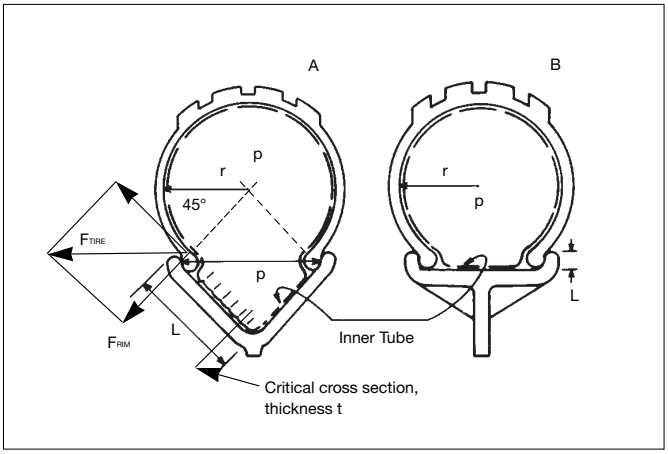

Fig. 5.04 **Wheel rim designs**

$F_{TIRE} = pr \sin(45)$

$F_{RIM} = F_{TIRE} \sin(45)$

bending stress:

$\sigma_B = 6\,(F_{RIM}\,L + \frac{1}{2}\,pL^2) / t^2$

membrane stress:

$\sigma_M = F_{RIM} / t$

For r = 16 mm, L = 18 mm, t = 8 mm and p = 0,5 MPa

this gives:

$F_{RIM} = 4$ N

$\sigma_B = 14{,}5$ MPa

$\sigma_M = 0{,}5$ MPa

It depends on the design temperature, if the total stress of 15 MPa is low enough to keep the creep strain limited. Lower stress levels can be obtained by keeping the rim height (subject to internal pressure) low, see Fig. 5.04 B. Radial ribbing can be added as shown to further stiffen the rim for radial loads.

Pressure Vessel Seals

Seals in end closures of cylindrical pressure vessels should be placed carefully to minimize creep. Fig. 5.05 A shows examples of wrong application (creep decreases pressure on seal so that it becomes untight); a proper solution is given in Fig. 5.05 B.

In cases of an end cap with a snap-fit joint, the cover should be designed such, that the pressure acts on the inner cylinder only, see Fig. 5.06.

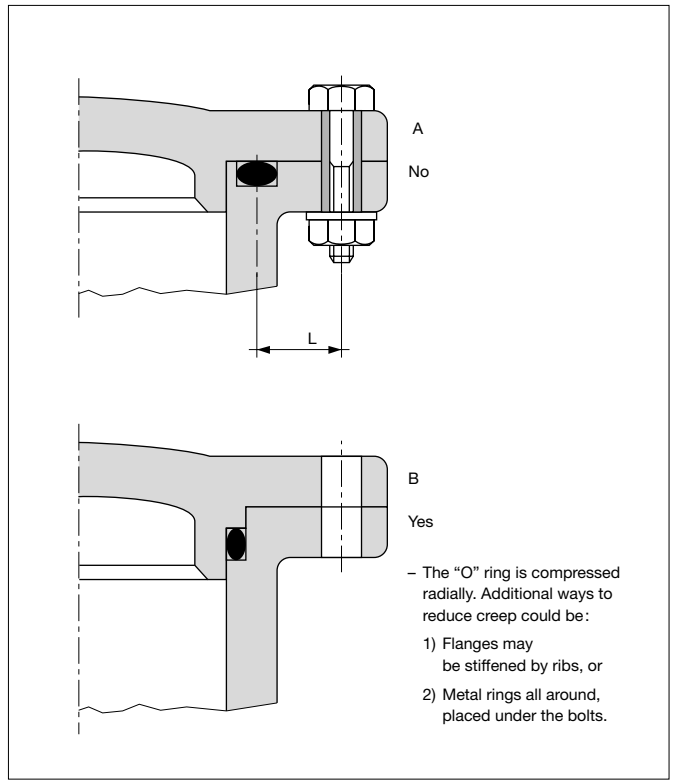

Fig. 5.05 **Sealing of bolted end-closure**

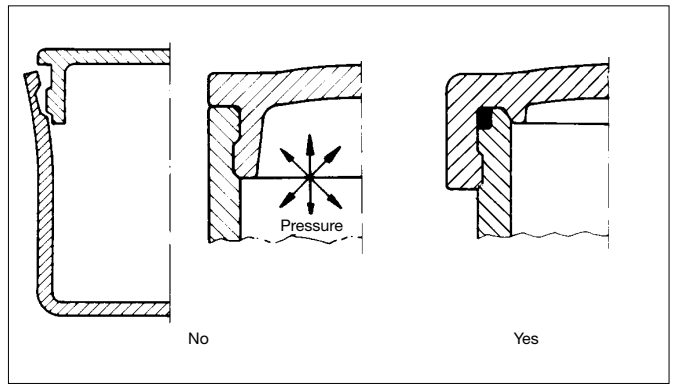

Fig. 5.06 **Sealing of snap-fit cover**

Cost Effective Design vs Raw Material Cost

While one of the primary jobs of the product designer is to develop the most cost effective design, he often is misled by specifying the material with the lowest price tag. The fact that this is not the route to cost effectiveness is demonstrated by the following examples:

Bicycle Wheel Design

In the specification of a material for a bicycle wheel, the prime consideration is usually finding the proper combination of toughness with stiffness. Among materials that could be considered as a substitute for glass-reinforced ZYTEL® ST which has been used for years in this application, one that comes close to meeting the physical requirements (allowing for a proper margin of safety) while offering a sizeable reduction in resin price is a reinforced (20 per cent glass fibres) grade of polypropylene (see Fig. 5.07).

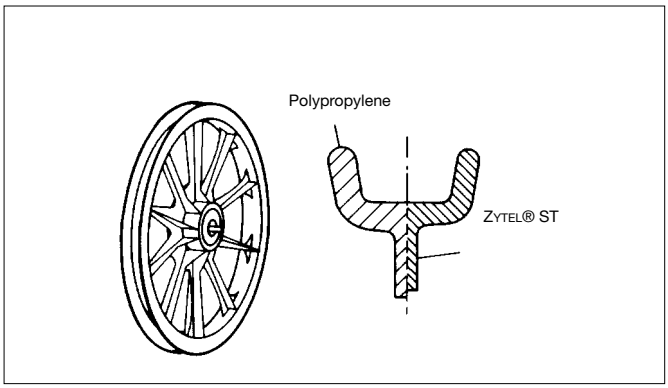

Fig. 5.07 **Wheel rim in ZYTEL® versus polypropylene**

While the wheel designed for polypropylene would require an additional 145 grams of material to meet the stiffness requirements, a dramatic savings would be realized if only resin price were considered.

	ZYTEL® ST	Polypropylene
Wheel Weight	0,91 kg	1,05 kg
Resin Price (per kg)	$ 4.12	$ 1.76
Resin Cost per Wheel	$ 3.73	$ 1.86

But other factors affect cost. Employing a single cavity mould, a 4,9 meganewton press can turn out 250 000 nylon wheels a year of ZYTEL® ST on a two-shift basis. Because of polypropylene's longer processing time – a 130 second cycle vs 60 seconds for the nylon wheel – two single cavity moulds would be required to match production.

Similarly, since material volume is greater, two 5,8 meganewton presses would be needed.

The direct investment would more then double, and, when amortized interest charges and increased machine time and labour costs are calculated, the picture changes. (No attempt was made to factor in the added cost of quality control problems that might be expected because of thicker walls). Add in normal selling expenses and return on investment and the comparison looks more like this:

	ZYTEL® ST	Polypropylene
End-User Price per Wheel	$ 6.01	$ 5.77

Though that's still a four percent advantage in the selling price of the polypropylene wheel, it does little to offset the vast superiority of the nylon wheel in terms of something as meaningful as impact strength. The Izod impact strength of ZYTEL® ST 801 nylon resin (1000 J/m at ambient temperature and 50% RH) is 20 times greater than that of polypropylene.

While the "cheaper" wheel would provide the same stiffness and safety factors at room temperature, these properties would not keep pace with those of the nylon wheel. At 65°C a not uncommon wheel temperature in the Southern countries, the strength and stiffness of the wheel in polypropylene would be only about 80 per cent of the wheel in ZYTEL® ST. The same would hold true for creep resistance, which is critical for pneumatic tire retention during operation.

Such other marketing and manufacturing disadvantages of the polypropylene wheel as 16 per cent greater weight and its bulky appearance reveal that ZYTEL® ST is indeed the wiser choice.

Wheel	Wall Thickness mm			Factor of Safety	Max Stress	Weight
	Rim	Spokes	Hub		MPa	kg
A	7,0	3,3-5,6	9,7	11	5,5	1,8
B	6,4	2,5-4,3	9,7	7	8,5	1,6

Chair Seats Reevaluated

The same kind of study was conducted on a product that is already being mass produced in a ‘‘cheaper’’ plastic, the typical lightweight chair found in waiting rooms and institutions. An impact-modified, glass-reinforced nylon at $ 3.95 per kg was substituted for unreinforced polypropylene selling at $ 1.08 per kg. A chair seat was designed in each material, using a rib reinforcement pattern that provided equal factors of safety and stiffness with a minimum volume of material (see Fig. 5.08). Again, using the same typical cost factors for annual production of 250 000 units, the results were not surprising.

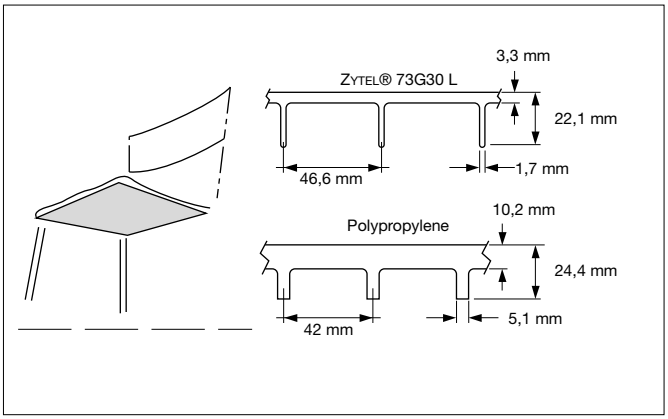

Fig. 5.08 **Chair seat in glass fibre reinforced ZYTEL® versus polypropylene**

	ZYTEL® 73G30L	Polypropylene
Seat Weight	1,27 kg	2,29 kg
Resin Cost	$ 5.01	$ 2.47
End-User Price per Seat	$ 7.21	$ 6.72

The end user price includes an additional $ 0.36 cost per part occasioned by the longer cycle time (100 seconds vs 35 seconds for the glass reinforced ZYTEL® seat) required for polypropylene – reducing what, at first, seemed like a 19 per cent price advantage to a 13 per cent advantage. That advantage can be more than offset, however, by the elimination of moulded-in metal inserts for leg and arm attachment and shipping cost benefits of a seat that weighs 44 per cent less.

Even more significant, the glass reinforced ZYTEL® seat would exhibit much higher creep resistance, particularly where chairs are stacked in high temperatures storage areas. It also offers much better impact resistance, a critical consideration in institutional usage.

Wheelbarrow Frame – a Potential Design

While some barrow makers already produce a product that takes advantage of the light weight and rust and corrosion resistance of high density polyethylene or polypropylene in the box, none – to the best of our knowledge – have built a frame in plastic. This analysis supplies a possible reason why: In a lower cost plastic, it would be both too heavy and too expensive!

Based on equivalent stiffness and safety factors, appropriate cross sections were determined in frames (see Fig. 5.09) of RYNITE® 530 engineering thermoplastic polyester, a PET (polyethylene terephthalate) resin reinforced with 30 per cent glass fibres, and of polypropylene resin, also reinforced with 30 per cent glass fibres.

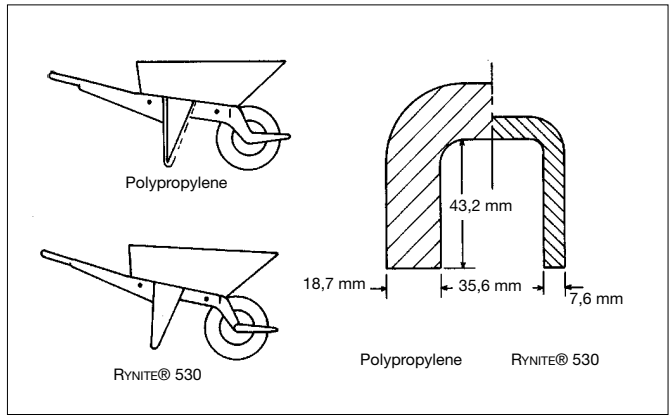

Fig. 5.09 **Wheelbarrow frame in RYNITE® versus polypropylene**

Here are the results:

	RYNITE® 530	Polypropylene
Frame Weight	8,16 kg	16,78 kg
Resin Price (per kg)	$ 3.24	$ 1.83
Resin Cost	$ 26.46	$ 30.71
End-User Price (per Frame)	$ 36.86	$ 43.61

Again, volume and cycle time (65 seconds for RYNITE® thermoplastic polyester vs. 120 seconds for polypropylene) necessitates use of two moulds and two larger machines for processing 250 000 polypropylene frames a year. And as before, the product in the cheaper material suffers in a comparison of such properties as strength, stiffness and impact resistance at temperature extremes. The expensive materials is the most cost effective.

The bicycle wheel, seat and wheelbarrow frame examples clearly show that a truly cost effective design analysis must include performance, manufacturing and marketing considerations and that the more expensive material is often the most cost effective, particularly where the end item is under stress.

6 – Springs and living hinges

Springs of DuPont engineering resins have been successfully used in numerous applications where intermittent spring action is required. Among unreinforced plastics, DELRIN® acetal resin is the best material due to its high degree of resiliency. Springs under constant load or deflection should be designed in spring steel.
Plastic materials, other than special composite structures, will not function well as constantly loaded springs due to creep and stress relaxation.

Integral, light-spring actions can be provided inexpensively in moulded parts of DELRIN® acetal resin by exploiting the fabricability and the particular properties of these resins, which are important in spring applications. These include, in addition to resiliency, high modulus of elasticity and strength, fatigue resistance and good resistance to moisture, solvents, and oils.

In the design of springs in DELRIN® acetal resin, certain fundamental aspects of spring properties of DELRIN® acetal resin should be recognized.

– The effect of temperature and the chemical nature of the environment on mechanical properties must be allowed for.
– Design stresses for repeatedly operated springs must not exceed the fatigue resistance of DELRIN® acetal resin under the operating conditions.
– Sharp corners should be avoided by provision of generous fillets.

Springs of a design based upon constant strength beam formulae operate at lower levels of stress than springs of other shapes for a given spring rate and part weight. Fig. 6.01 is a comparison of various spring shapes which produce an equivalent spring rate. The upper spring *A* has a constant rectangular cross section and an initial spring rate calculated from the deflection formula for a cantilever beam ($W/y = EI/L^3$) where W is the load and y is the deflection of the end of the spring. The other springs were designed to provide an identical spring rate using formulas for constant strength beams. This results in lower stress level and, in some cases, a reduction in weight. For example, in spring *C* the stress is two-thirds of that developed in spring *A*, and weight is reduced by 10%. This weight reduction can be of equal importance as a cost savings factor when large production runs are contemplated. An important fact to keep in mind is that tapered springs are reasonable to consider for production by injection moulding. Metal springs made by stamping or forming operations would be cost prohibitive in shapes such as *D* or *E*.

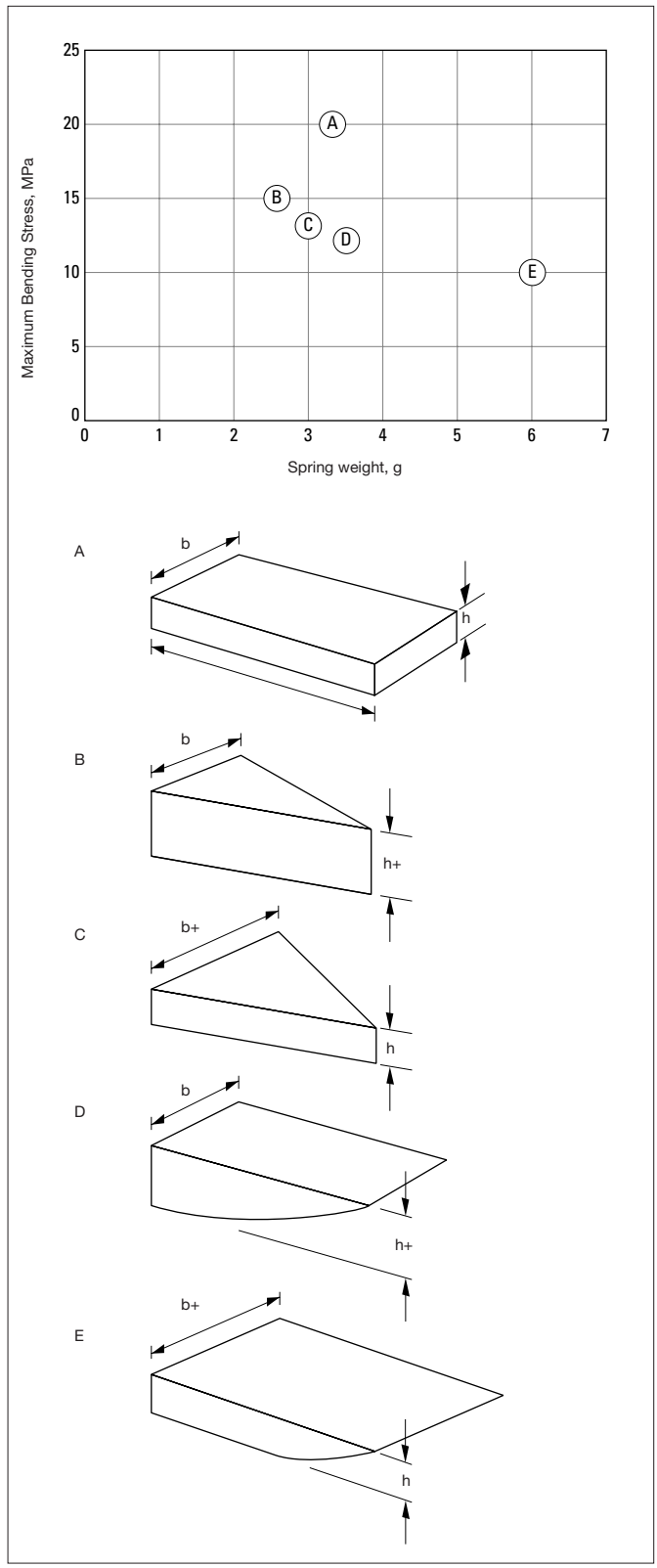

Fig. 6.01 **Bending stress versus spring weight for various spring designs (23° C)**

Design of living hinges

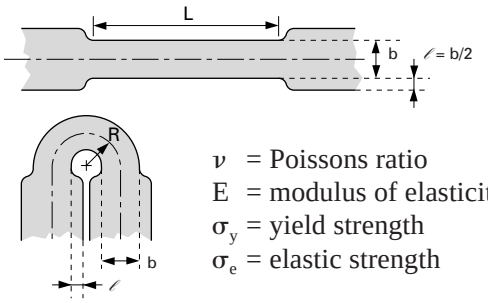

ν = Poissons ratio
E = modulus of elasticity
σ_y = yield strength
σ_e = elastic strength

Fig. 6.02 **Recommended shape of living hinge**

In case of 180° bending: $R = \frac{L}{\pi}$

Strain in extreme fibre: $\epsilon = \pi \left(R + \frac{b}{2}\right)$

Stress in extreme fibre : $\sigma = \frac{\pi\, b\, E}{2\, L\, (1 - \nu^2)}$

For elastic behaviour, the following should be satisfied:

$$\frac{b}{L} < \frac{2\,\sigma_e}{\pi\, E}\,(1 - \nu^2) \qquad (1)$$

For other closing angles than 180°, correct π in the above equation.

Living hinges, designed for elastic behaviour will have rather big dimensions, which may make them less pratical.

A certain amount of plasticity can be allowed before failure occurs, which modifies equation (1) to:

$$\frac{b}{L} < \frac{2\,\sigma_y}{\pi\, E}\,(1 - \nu^2) = \frac{2\,\epsilon_y}{\pi}\,(1 - \nu^2) \qquad (2)$$

7 – Bearings

Bearings and bushings of ZYTEL® nylon resin and DELRIN® acetal resin are used in numerous commercial applications. ZYTEL® is uniquely suited to abrasive atmospheres such as in cement plants and in factories where dust is a constant problem. Bearings of ZYTEL® have been used successfully under diverse environmental conditions including the presence of various oils, greases, chemicals, reagents and proprietary compositions, many of which are harmful to other types of plastic materials.

Bearings of DELRIN® acetal resin offer the unique characteristic of no ‘‘Slip-stick’’, or the static friction coefficient being equal or lower than dynamic. Typical applications are hemispherical bearings for auto ball-joints; food mixer housing-bearing combinations; wear surfaces on integral gear-spring-cam units for adding machines; clock bushings and many others. The extensive use of DELRIN® acetal resin as a bearing material has developed because of its combination of low coefficient of friction with self-lubricating properties, good mechanical properties and dimensional stability in many chemical media.

The performance of bearings depends on a number of factors:

Shaft Hardness and Finish

If a metal shaft runs in a bearing of DELRIN® acetal resin or ZYTEL® nylon resin, the most important parameter is the surface hardness of the shaft. For unlubricated bearings of DELRIN® cetal resin or ZYTEL® nylon resin on metal, the metal should be as hard and smooth as consistent with bearing-life requirements and bearing cost. Common centreless ground shafts of steel are acceptable, but increased hardness and finish will improve bearing life.

The actual wear performance will change with the speed and load and the type of mating surface material.

Soft steel or stainless steel, as well as all non-ferrous metals do not run well with plastic bearings, even those with a socalled ‘‘self-lubricating’’ filler. It is only a question of load, speed and time until wear increases rapidly, leading to premature failure.

Shaft hardness becomes more important with higher PV-values and / or the expected service life. A highly polished surface does not improve wear behaviour if the hardness is insufficient.

There are nevertheless a great number of bearing applications which perform satisfactorily against soft metals running at low speed and load, such as bearings for clocks and counter mechanisms. DELRIN® acetal resin generally performs better than other plastics against soft metals. If a bearing fails, it is, however, most important to carefully check the hardness of the metal shaft surface since it may account partially for unsatisfactory performance.

Bearing Surface

The influence of mating surface on wear rate between DELRIN® acetal resin and various materials is shown in Fig. 7.01. A dramatic reduction in wear can be seen as material hardness increases between curves 1, 2 and 3. The most dramatic differences can be seen in curve 4 where DELRIN® acetal resin is matched with ZYTEL® 101 nylon.

The wear performance of DELRIN® 500, DELRIN® 900 F and DELRIN® 500 CL are illustrated in Fig. 7.02 against mild steel.

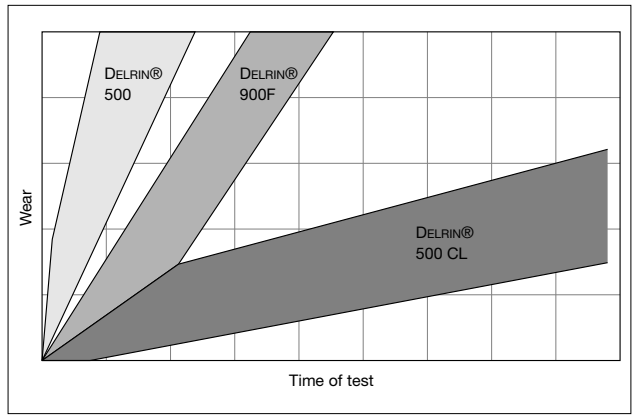

Fig. 7.02 Wear of DELRIN® 500 against mild steel*
* Thrust washer test; non-lubricated; P, 0,04 MPa; V, 0,95 m/s.
NOTE: DELRIN® 900 F was previously coded DELRIN® 8010.

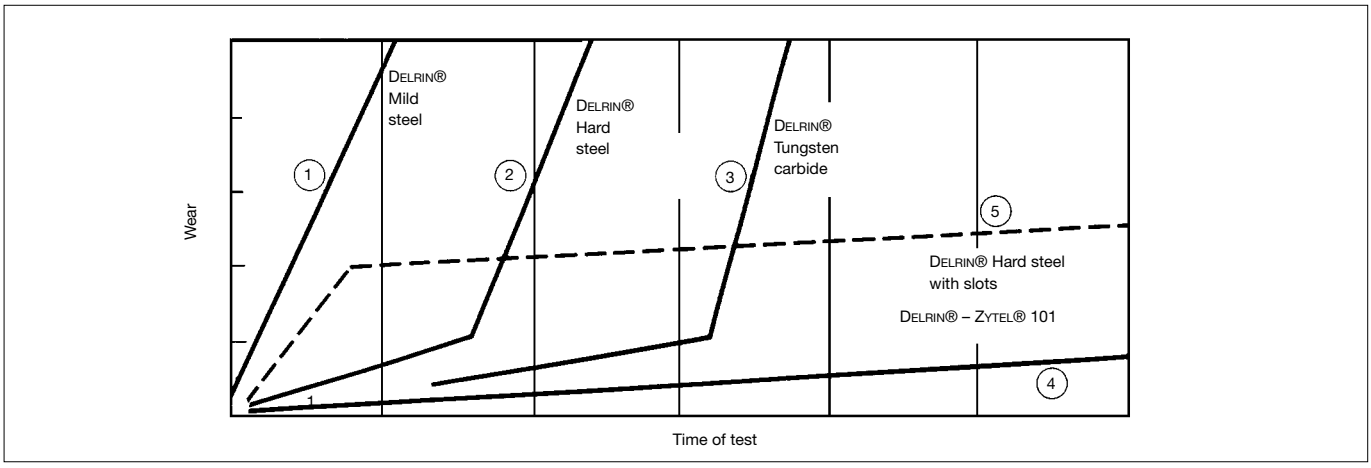

Fig. 7.01 **Wear of DELRIN® 500 against various materials***
*Thrust washer test non-lubricated; P, 2 MPa; V, 50 mm/s; AISI 1080 carbon steel.

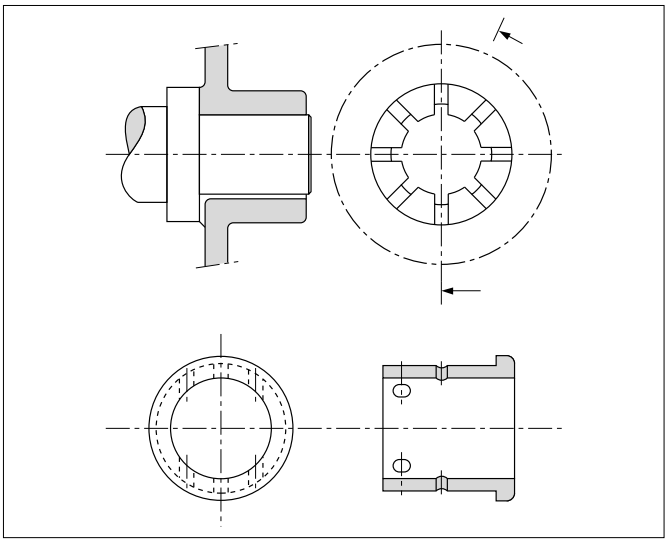

Fig. 7.03 **Typical slotted bearings**

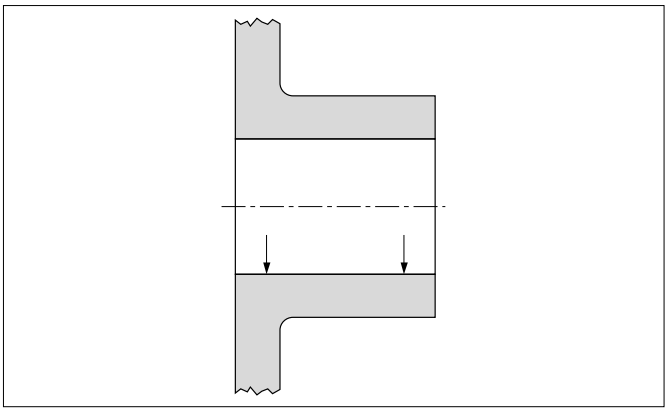

Fig. 7.04 **Bearing for low pressure loads**

Comparable data have also been obtained to show the suitability of DELRIN® acetal resin with aluminum and brass. When loads and operating speeds are low, as in clocks and hand-operated window crank drives, anodized aluminium and hard brass can be used as bearing surfaces with DELRIN® acetal resin.

The actual wear performance of specific resins will vary depending upon load, speed, mating surface, lubrification and clearance. Wear data can be found in the product modules.

A bearing surface should always be provided with interruptions to allow wear debris to be picked up and, as much as possible to be removed from the rubbing surface. This can be achieved by means of longitudinal slots or simply by radial holes depending on the design possibilities.

Extensive tests have proven beyond any doubt that maintenance of a clean rubbing surface increases service life considerably (Fig. 7.01, curve 5). Axial grooves shown in Fig. 7.03 may constitute the single most useful design improvement to a plastic bushing or bearing.

Since significant increases in service life will be dependent on the volume of abrasive particles removed from the wear interface, the following design guidelines should be helpful:

1) use of a minimum of three grooves;
2) make them as deep as technically feasible;
3) keep width at about 10 per cent of shaft diameter;
4) use through-holes where wall is too thin for grooves.

Another important factor is that the pressure load on the bearing is distributed equally over the axial length. In a design according Fig. 7.04 this is doubtful. An improved approach is shown in Fig. 7.05.

Accuracy

A determining factor, is the geometric shape of the bearing bore. A simple sleeve moulded for the purpose of being press-fitted into a metal frame as shown on Fig. 7.06 may be sufficiently accurate.

Most plastic bearings are, however, part of a whole unit or combined with other components. Fig. 7.07 shows three typical examples where it becomes difficult or even quite impossible to mould a perfect round and/or cylindrical bore due to part geometry affecting uniform mould shrinkage.

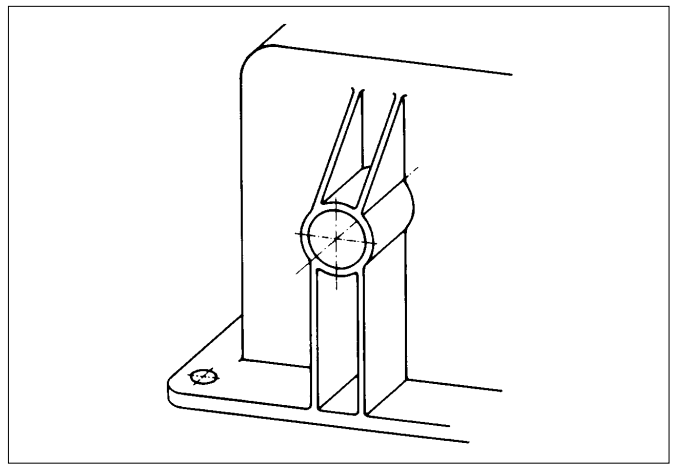

Fig. 7.05 **Bearing for high pressure loads**

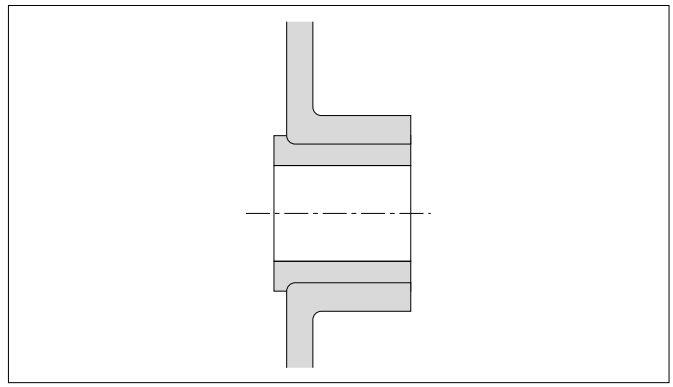

Fig. 7.06 **Press-fitted sleeve bearing**

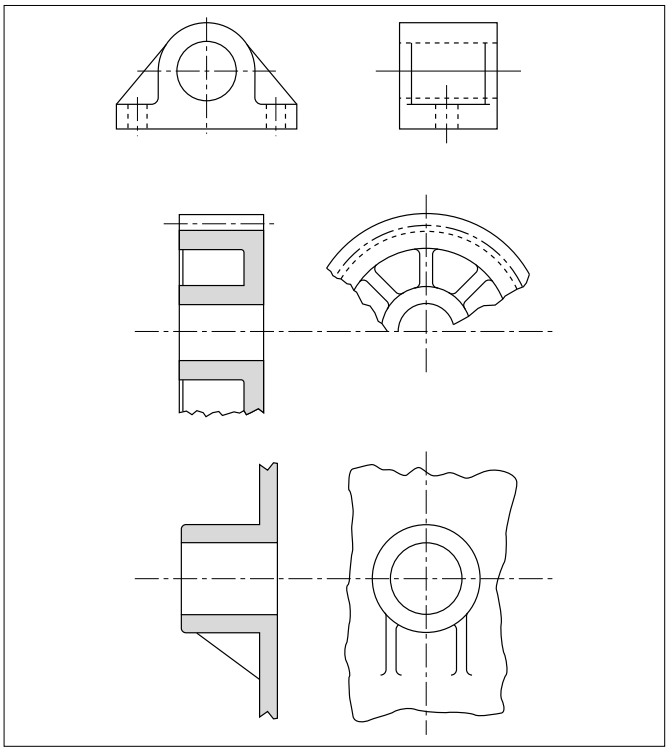

Fig. 7.07 **Typical designs for integral bearings**

Thus, the load is carried by only a portion of the surface, causing high local specific pressure and immediate initial wear. With high PV value bearings, this may prove to be disastrous because the wear debris is moved around continuously, thus accelerating wear and shortening service life. On low PV value bearings or ones which are operated only occasionally, this may be of no importance. High performance bearings are often post-machined in order to obtain a perfect cylindrical and round bore, which improves performance significantly.

Bearing Clearance

Plastic bearings generally require larger running clearances than metal bearings, due primarily to the much higher coefficient of linear thermal expansion of the plastic material. The designer must also take into consideration the fact that post-moulding shrinkage can reduce the diameter of the bearing after it is in service, and particularly if the service temperature is elevated. Post-moulding shrinkage can be minimized by proper moulding conditions. The engineer should include in his specifications a limit on post-moulding shrinkage. This can be checked on a Q/C basis by exposing the part for approximately one hour to a temperature approximately 28° C above the maximum use temperature, or 17° C below the melting point, whichever is lower.

Bearing clearances, when not carefully checked and controlled, are the most frequent causes of bearing failures. Bearing diametral clearance should never be allowed to go below 0,2-0,4% of the shaft diameter for DELRIN® acetal and 0,3-0,5% for ZYTEL® nylon resin.

Where the application requires closer running or sliding clearance, split bearing inserts of DELRIN® acetal resin or ZYTEL® nylon resin have been used extensively. Here, the dimensional effect of the environment on bearing clearance need be considered only on the wall thickness rather than on the diameter.

Lubrication

The main reason for using bearings of DELRIN® acetal resin and/or ZYTEL® nylon resin is to achieve good wear performance under completely dry running conditions (for instance in the food industry), or with initial lubrication (speed reducer bearings of all kinds in closed housings, like appliances).

Continuously lubricated bearings are rarely encountered in the products where plastics are used and are not discussed here.

Initial lubrication should always be provided. It not only facilitates the run-in period but increases total service life. Unless special steps are taken to retain the lubricant, it will have a limited effectiveness in time, after which the bearing must be considered as dry running. Consequently, an initially lubricated bearing where the lubricant cannot be retained cannot sustain a higher load but it will last longer and show better wear behaviour. Initial lubrication is particularly helpful in running against soft metals.

Protection against Dirt Penetration

Bearings in DELRIN® acetal resins, ZYTEL® nylon resins and RYNITE® thermoplastic polyester resins, although more tolerant than metals, work more satisfactorily when they are protected against penetration of dust, dirt and water. The benefit of initial lubrication may be lost completely by the action of dirt particles penetrating between the rubbing surfaces, thus forming an abrasive paste with the lubricant. Bearings running at a high PV-value should therefore be protected by means of felt rings or rubber seals which in addition to keeping out dirt, retain the lubricant. To say that plastic bearings are not affected by dirt is absolutely wrong. Wear debris from the metal shaft as well as dirt particles can be embedded into the plastic bearings and substantially reduce service life.

It is not always practical to protect a bearing efficiently in the described way. This does not necessarily mean that plastic bearings will not function in adverse environments. The designer must be aware of these problems and make allowances with regard to bearing pressure, velocity and service life. Successful applications of this nature can be found in conveyors, chains and textile machine bearings, for example.

In environments where dust and dirt must be tolerated, ZYTEL® nylon resin is the preferred material. In such applications, it may prove beneficial to eliminate initial lubrication.

To summarize then, important design considerations affecting the performance and life of bearings in DELRIN® acetal resin, ZYTEL® nylon resin and RYNITE® thermoplastic polyester are:

- Surface hardness and finish of the metal shaft
- Geometric accuracy of bearing bore
- Correct clearance
- Grooves or holes in the sliding surface
- Initial lubrication
- Means to protect the bearing against dirt penetration and to retain the lubricant.

Thermal Conditions

- Bearing clearance changes with temperature and so can influence the allowable load. Furthermore plastics soften at elevated temperatures. Therefore the maximum surface temperature caused by friction and external influences should not exceed 70-80° C in case of bearings made in DELRIN® and 80-100° C for ZYTEL® if good performance and long service life are to be expected.

Calculation of Bearings

A plastic bearing subjected to a continuously but slowly increasing load and/or speed reaches a point where it fails due to excessive temperature rise. This limit is defined as the maximum PV value, and it is often used to compare various plastic materials as far as wear behaviour is concerned. The surface temperature in a bearing is not only a function of load, speed and coefficient of friction, but also of heat dissipation. The latter depends very much on the overall concept of the testing device, for which no international standards exists. The comparison of such values is therefore pointless unless they are determined under exactly the same conditions. Even if this is the case, they are of no great help to designers for the following reasons:

- A bearing running close to the PV limit thus determined usually has so much wear that the value can only be applied in very special cases.
- PV limits of plastic materials measured under specific lab conditions may, for many reasons, prove to be completely different or even reversed in practical applications.
- Many socalled "special bearing compositions" with fillers show higher PV limits than the base resin. This result is merely due to the fact that blended fillers reduce the coefficient of friction, thus generating less heat and allowing the bearing to run at a higher PV value. This fact does not guarantee less wear. Tests have shown that most unfilled resins have better wear behaviour than the same resins with fillers. This is significant because it is a widespread but erroneous belief that a low coefficient of friction also means better wear resistance. DELRIN® AF acetal resin is an exception, as both lower friction and wear result from the addition of TEFLON® fibres. Filled resins may prove to be preferable for very specific applications where a low coefficient of friction is essential. For instance, highly loaded bearings running for very short periods at a time and for which a limited service life is expected.

The coefficient of friction is not a material constant but rather a response of the bearing surface to a dynamic event. The coefficient of friction data in Table 7.01 shows a comparison of DELRIN® acetal resin and ZYTEL® nylon resin against steel, etc., at a specific set of conditions. A low non-lubricated coefficient of friction can mean lower horsepower and smoother performance to the designer. Table 7.01 also illustrates the low stick-slip design possibilities with DELRIN® acetal resin with the static coefficient of friction lower than the dynamic, and particularly when running against ZYTEL® nylon resin.

The diagram in Fig. 7.08 suggests reasonable PV values which take into account the mating material and the degree of post machining.

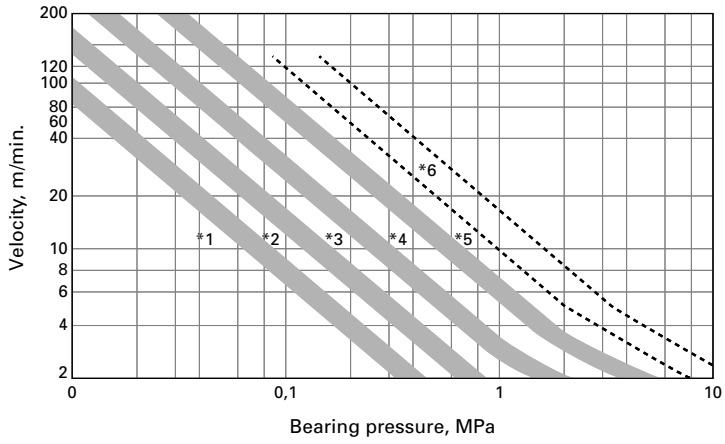

Fig. 7.08 **Bearing pressure versus velocity**
*See Table 7.02 for guide to the proper curve to use.

It does not include, however, severe running conditions at higher temperatures or the presence of dirt, dust, textile particles or other abrasive materials.

Table 7.02 shows how to choose the proper curve in Fig. 7.08. This guide is based on the assumption that the design, bearing clearance, bore accuracy, processing assembly and load distribution are correct.

Table 7.01 **Coefficient of friction***

	Static	Dynamic
DELRIN® acetal resin on steel		
DELRIN® 100, 500, 900	0,20	0,35
DELRIN® 500F, 900F	–	0,20
DELRIN® 500 CL	0,10	0,20
DELRIN® AF	0,08	0,14
DELRIN® on DELRIN®		
DELRIN® 500/DELRIN® 500	0,30	0,40
DELRIN® on ZYTEL®		
DELRIN® 500/ZYTEL® 101 L	0,10	0,20
ZYTEL® on ZYTEL®		
Max.	0,46	0,19
Min.	0,36	0,11
ZYTEL® on Steel		
Max.	0,74	0,43
Min.	0,31	0,17
RYNITE® on RYNITE®		
Max.		0,27
Min.		0,17
RYNITE® on Steel		
Max.		0,20
Min.		0,17
HYTREL® 4056 on Steel	0,32	0,29
HYTREL® 5556 on Steel	0,22	0,18
HYTREL® 6346 on Steel	0,30	0,21
HYTREL® 7246 on Steel	0,23	0,16
PC on Steel	0,50	–
ABS on Steel	0,50	–
PBT on Steel	0,40	–
PBT on PBT	0,40	

* Data on ZYTEL® nylon resin and DELRIN® acetal resin determined via the Thrust Washer test, non-lubricated, 23° C; pressure 2,1 MPa; velocity 3 m/min.
Data on RYNITE® thermoplastic polyester determined in accordance with ASTM D1894.

Table 7.02 **Guide to curves in Fig. 7.08 to determine maximum allowable PV-values**

Shaft	Bore Moulded	Bore Machined
Hardened and ground steel – Chrome plated R_c >50, ZYTEL®	3	4
Stainless steel – Anodized aluminum R_c 30-35, DELRIN®	2-3	
DELRIN® on steel R_c >70, dry		5
DELRIN® on steel, R_c >70, lubricated, DELRIN® AF	6	
Soft steel – Ground stainless steel	2	2-23
Cold drawn steel unmachined	1-2	2
Non ferrous metals – Diecast alloys	1 or less	–

Definitions

The parameters velocity and bearing pressure in Fig. 7.08 are defined as follows (see also Fig. 7.09):

Projected bearing surface $f = d \times l \text{ mm}^2$

Specific bearing pressure $p = \frac{P}{d \times l} \text{ MPa}$

Peripheral speed $v = \frac{d \times n \times \pi}{1000} \text{ m/min}$

PV value $PV = p \cdot v \text{ MPa} \cdot \text{m/min}$

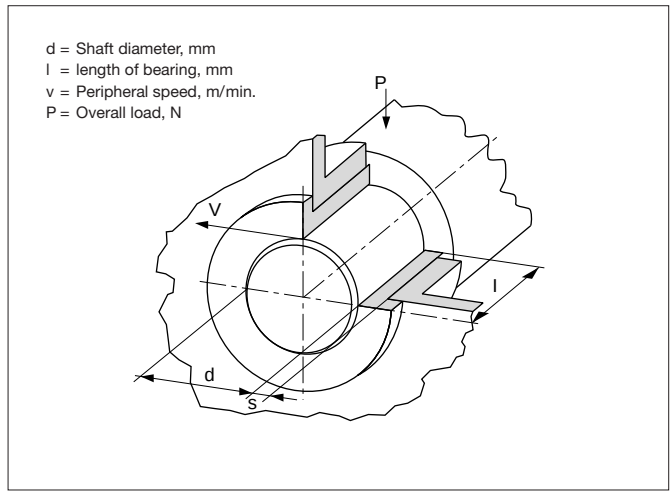

Fig. 7.09 **Definitions of bearing dimensions**

Table 7.03 **Max. PV values without lubrication**

Material	MPa · m/min
ZYTEL® 101	6
DELRIN® 100/500	10
DELRIN® 500 CL	15
DELRIN® 500 AF	25
HYTREL® 5556/5526	2

Design Examples

Gear Bearings

Fig. 7.10 shows some solutions used in precision mechanics, especially regarding bearings for gears. In the case of high grade industrial drives like time switches and regulator clocks, the hardened and ground shafts are generally held fast in the platens, as shown in Fig. 7.10 A.
Should the core become too long as related to its diameter, the bore can be made conical as shown and provided with an additional bushing. This solution is only to be utilised when the hub cannot be shortened. Should the wheel and the journal be moulded integrally, the bearing bores should be deep drawn or at least precision stamped (Fig. 7.10 B).

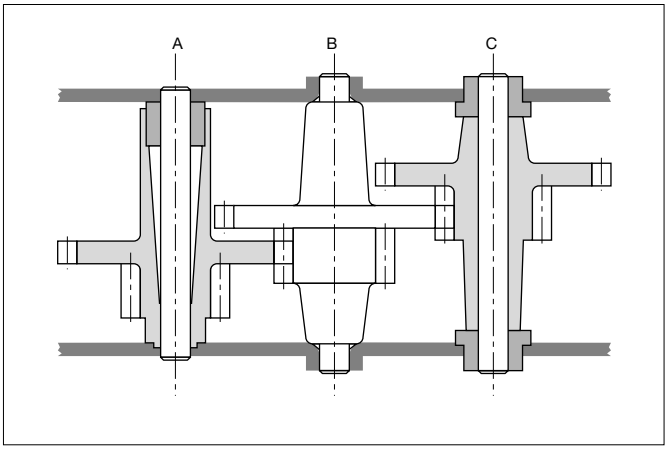

Fig. 7.10 **Bearings for gears**

Normally stamped holes have a rough surface and cause too much wear on the journal even at low PV-values. Should the shaft rotate together with the gear, it can be moulded-in or pressed-in as shown in Fig. 7.10 C.

In this case the platens are provided with additional bearing bushings as shown in Fig. 7.11. Whichever design is to be preferred for a particular application will depend first of all on economic factors, the required service life and the overall design of the device.

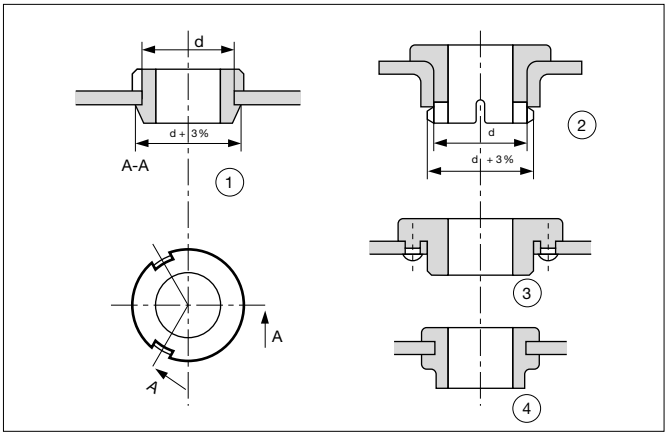

Fig. 7.11 **Securing plastic bearings**

Self-Aligning Bearings

Use of the plastics as engineering materials often allow an integration of several different functions in a part without higher costs. The designer has a wide variety of new design possibilities which allow ingenious and simple solutions. Fig. 7.12-7.19 show only a few examples to illustrate this fact.

Fig. 7.12: Mounting flange of a small motor with a flexible suspension of the bearing. The bearing becomes self-aligning to a limited extent.

Fig. 7.13: Self-aligning bushing with cooling slits, snapped directly into the mounting flange. The latter is itself secured in the sheet metal housing by mean of 3 snap heads.

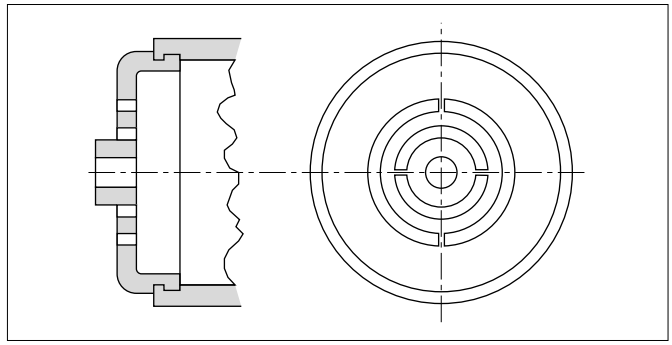

Fig. 7.12 **Bearing for a small motor**

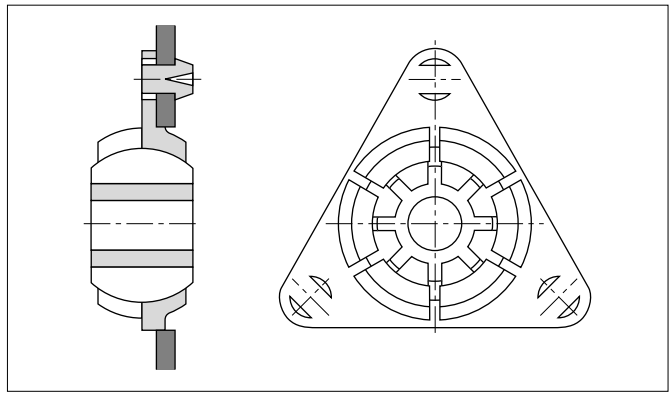

Fig. 7.13 **Self-aligning bushing**

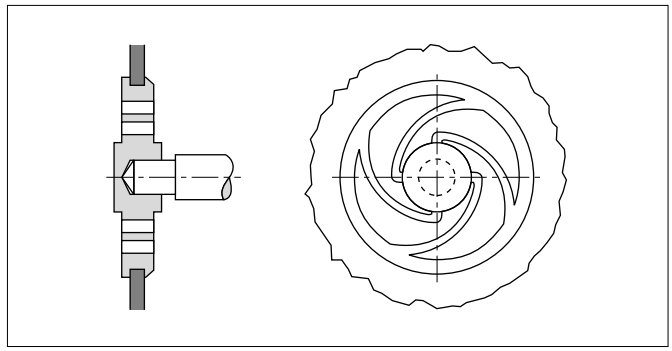

Fig. 7.14 **Elastically suspended bearing**

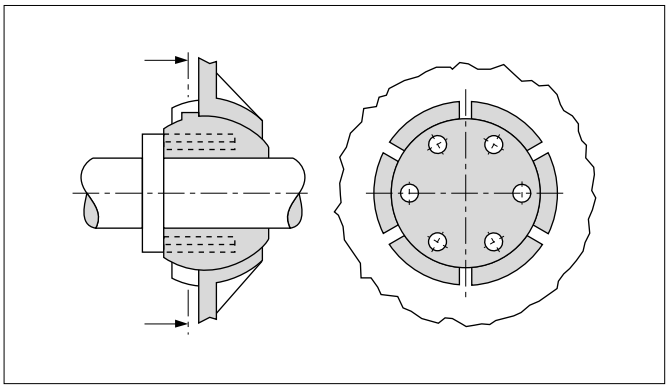

Fig. 7.15 **Self-aligning radial bearing**

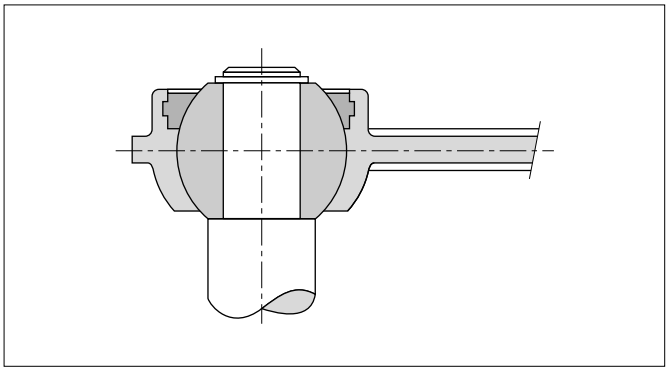

Fig. 7.16 **Spherical bearing, snap fitted**

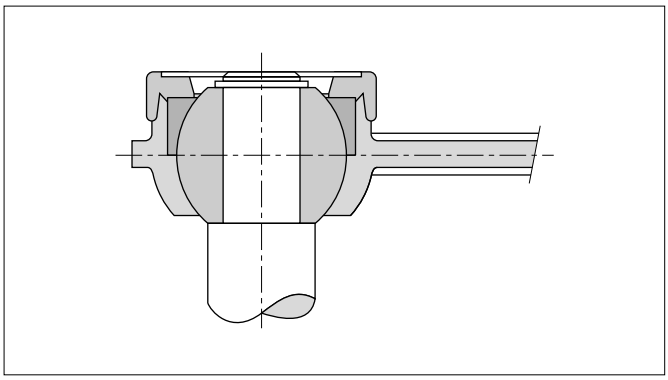

Fig. 7.17 **Spherical bearing, spin welded**

Fig. 7.14: Small bearing elastically suspended, snapped into metal sheet.

Fig. 7.15: Self-aligning and radial bearing. The lug preventing rotation should be noted.

Fig. 7.16: Connecting rod spherical bearing made of DELRIN® with snapped-in securing ring. The ball made of nylon ensures good bearing properties with low wear even when completely dry.

Fig. 7.17: Similar design, but with spin welded securing ring for high axial loads.

In order to safeguard the clarity of the illustrations, the axial grooves are not shown in these examples. Naturally they are to be provided in each case.

Testing Guidelines

In order to obtain comparative wear results of various plastic materials a trial cavity is often made and used for moulding the same bearing in many different plastics. This procedure has shown to give false and misleading results if the test part is a radial bearing. Due to differences in mould shrinkages among various plastic materials, bore accuracy and especially bearing clearances are far from being identical, thus producing erroneous wear rates. Such tests should consequently always be carried out with thrust bearings which eliminate any influence of clearance.

It must be kept in mind, however, that comparative results obtained under lab conditions are by no means always reproducible on practical applications. Final conclusions can only be drawn from tests carried out with moulded parts representative of production parts working as closely as possible to the expected conditions.

Accelerated tests at higher PV values are useless because the surface temperature may be much higher than under real conditions, causing premature failure. On the other hand, a bearing which operates only occasionally or for short periods at a time can be tested on a continuous run, provided that the temperature stays within the end-use limit.

Successful bearing design takes into account the aformentioned information, couples it with adequate end-use testing and provides for adequate Q/C methods.

Conclusion

Application of plastics as bearing materials is more limited by the admissible wear than by admissible PV-values. Bearings operation on the borderline of the admissible PV-value usually show high wear so that only a short service life can be expected. Certain plastics can be more highly loaded owing to their high melting point, but will also show excessive and inadmissible wear near the borderline of the maximum PV-values. It is therefore a mistake to give too much importance to maximal PV shown in the literature or to try to compare various plastics on this basis.

As this work emphasizes a bearing of plastics is only as good as it was designed and made, it is therefore the task of the designer to keep in mind all the factors influencing wear right from the beginning.

It should also not be forgotten that the use of plastic bearings has its natural limits and that consequently it is useless to expect performance from them of which they are not capable.

8 – Gears

Introduction

DELRIN® acetal resins and ZYTEL® nylon resins are used in a wide variety of gear applications throughout the world. They offer the widest range of operating temperature and highest fatigue endurance of any thermoplastic gear material, accounting for their almost universal use in non-metallic gearing.

The primary driving force in the use of plastic vs. metal gears is the large economic advantage afforded by the injection moulding process. In addition, cams, bearings, ratchets, springs, gear shafts and other gears can be designed as integral parts in a single moulding, thus eliminating costly manufacturing and assembly operations. Tolerances for plastic gears are in some cases less critical than for metal gears because the inherent resiliency enables the teeth to conform to slight errors in pitch and profile. This same resilience offers the ability to dampen shock or impact loads. The use of ZYTEL® nylon resin as the tooth surface in engine timing chain sprockets is an outstanding example of this latter advantage. In this case, timing chain life is extended because nylon dampens somewhat the transmission of shock loads from fuel ignition. ZYTEL® nylon resin and DELRIN® acetal resin have low coefficients of friction and good wear characteristics, offering the ability to operate with little or no lubrication. They can also operate in environments that would be adverse to metal gears. A summary of the advantages and limitations of plastic gears is given in Table 8.01.

Knowledge of the material performance characteristics and use of the gear design information to follow is important to successful gear applications in DELRIN® acetal resin and ZYTEL® nylon resin.

Gear Design

The key step in gear design is the determination of allowable tooth bending stress. Prototyping of gears is expensive and time consuming, so an error in the initial choice of tooth bending stress can be costly.

For any given material, the allowable stress is dependent on a number of factors, including:

- Total lifetime cycle
- Intermittent or continuous duty
- Environment – temperature, humidity, solvents, chemicals, etc.
- Change in diameter and centre to centre distance with temperature and humidity
- Pitch line velocity
- Diametral pitch (size of teeth) and tooth form
- Accuracy of tooth form, helix angle, pitch diameter, etc.
- Mating gear material including surface finish and hardness
- Type of lubrication (frictional heat)

Selection of the proper stress level can best be made based on experience with successful gear applications of a similar nature. Fig. 8.01 plots a number of successful gear applications of DELRIN® acetal resin and ZYTEL® nylon resin in terms of peripheral speed and tooth bending stress. Note that all of these applications are in room temperature, indoor environments. For similar applications operating at temperatures higher than 40° C, the allowable stress should be multiplied by the ratio of the yield strength at the higher temperature to the yield strength at 40° C. Since fatigue endurance is reduced somewhat as temperature increases, this effect must also be considered. Where very high temperatures are encountered, thermal ageing may become a factor.

Where suitable experience is not available, the allowable tooth stress must be based on careful consideration of all the factors previously outlined, and on available test data on the gear material of choice.

Table 8.01 **Advantages and Limitations of Plastic Gears**

Advantages	Limitations
Economy in injection moulding	Load carrying capacity
Combining of functions	Environmental temperature
No post-machining or burr removal	Higher thermal expansion coefficient
Weight reduction	Less dimensional stability
Operate with little or no lubrication	Accuracy of manufacture
Shock and Vibration damping	
Lower noise level	
Corrosion resistance	

A number of years ago, DuPont commissioned a series of extensive gear tests on gears of DELRIN® acetal resin and ZYTEL® nylon resin. This data can be combined with environmental operating conditions to arrive at an initial tooth bending stress.

Whether similar experience exists or not, it is essential that a prototype mould be built and the design carefully tested in the actual or simulated end-use conditions.

Additional information for fatigue stresses for DELRIN® and ZYTEL® 101 is given in Table 8.02.

Table 8.02 **Suggested Fatigue Strength for DELRIN® and ZYTEL® 101**

$\sigma_n = \sigma_1 [1 - C_n \log (n)]$ (MPa)

where: σ_1 = fatigue strength for 10^6 cycles, see Table 8.03

C_n = 0,22 for ZYTEL® 101; = 0,25 for DELRIN®

n = number of cycles in millions (industrial purposes: $n \geq 1000$)

$\sigma_{all} = c_1 c_2 c_3 \sigma_n$ (MPa)

where: $c_1 = 1 - 0{,}6\,(T - 20)/80$

T = temperature in °C

c_2 = factor for shock-load
no shocks: $c_2 = 1{,}0$
heavy shocks: $c_2 = 0{,}5$

c_3 = factor for velocity = $1/(1 + v)$

v = peripheral velocity; ≤ 5 (m/s)

Table 8.03 **Suggested Fatigue Strength (σ_1) for DuPont gear materials for 10^6 cycles (MPa)**

	Lubrication	
Material	Continuous	Initial
DELRIN® 100	45	27
DELRIN® 500	36	18
ZYTEL® 101	36	18

Once the admissible tooth bending stress has been determined, the designer can proceed with the selection of the other variables.

The nomograph or the formula shown in Fig. 8.02 can be used for this purpose.

The nomograph has been based on a tooth form factor of 0,6. The accuracy of the nomograph is sufficient at this stage. There is no point in using equations with factors having three decimal places when this is only a first and rough approach to the final gear design. Only after adequate testing of moulded prototypes will the final design be achieved.

Using the allowable stress and the tangential force, a line can be drawn intersecting the Reference line. At this point either the face width or the module must be known. Unless pace is very critical, it is wise to choose first the diametral pitch, as this determines the size of the teeth, regardless of the pitch diameter.

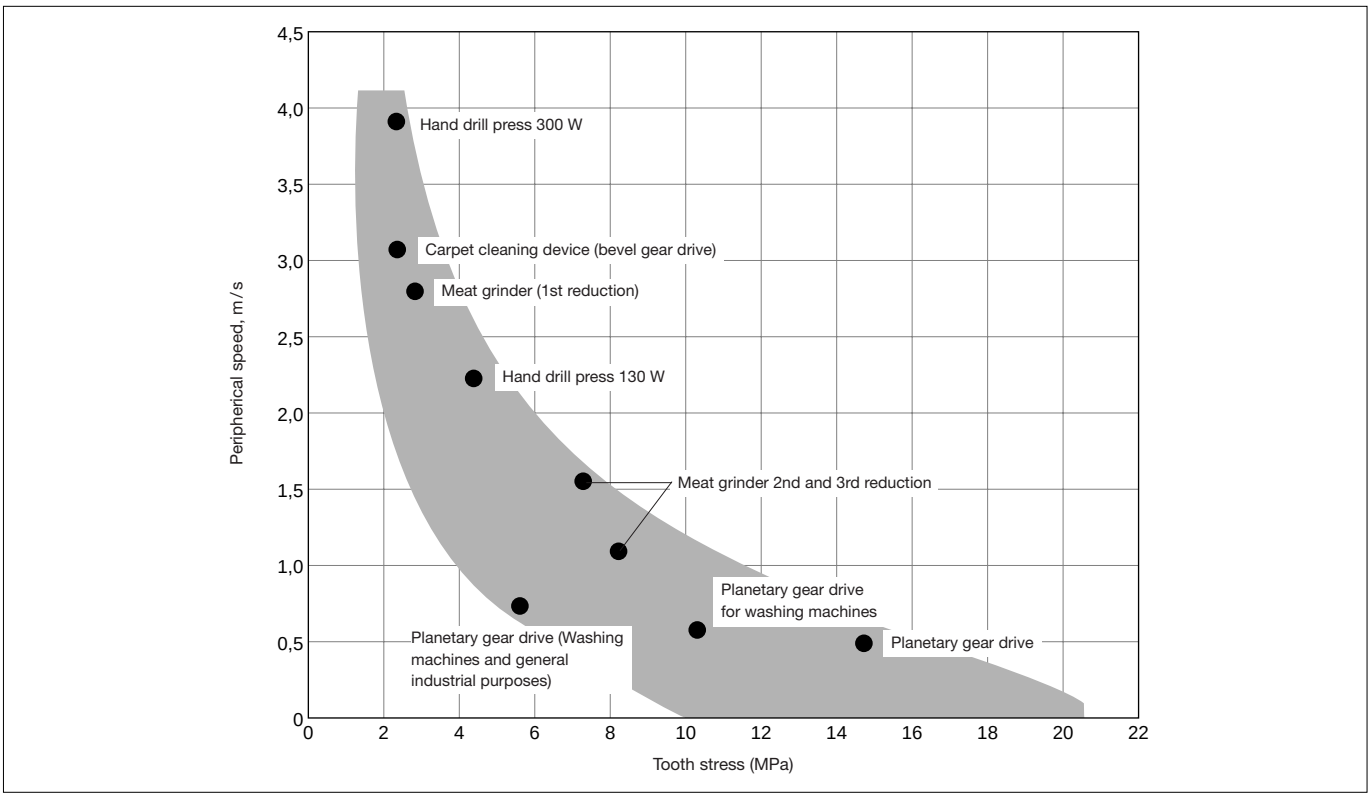

Fig. 8.01 **Speed versus stress: Typical gear applications placed on curve**

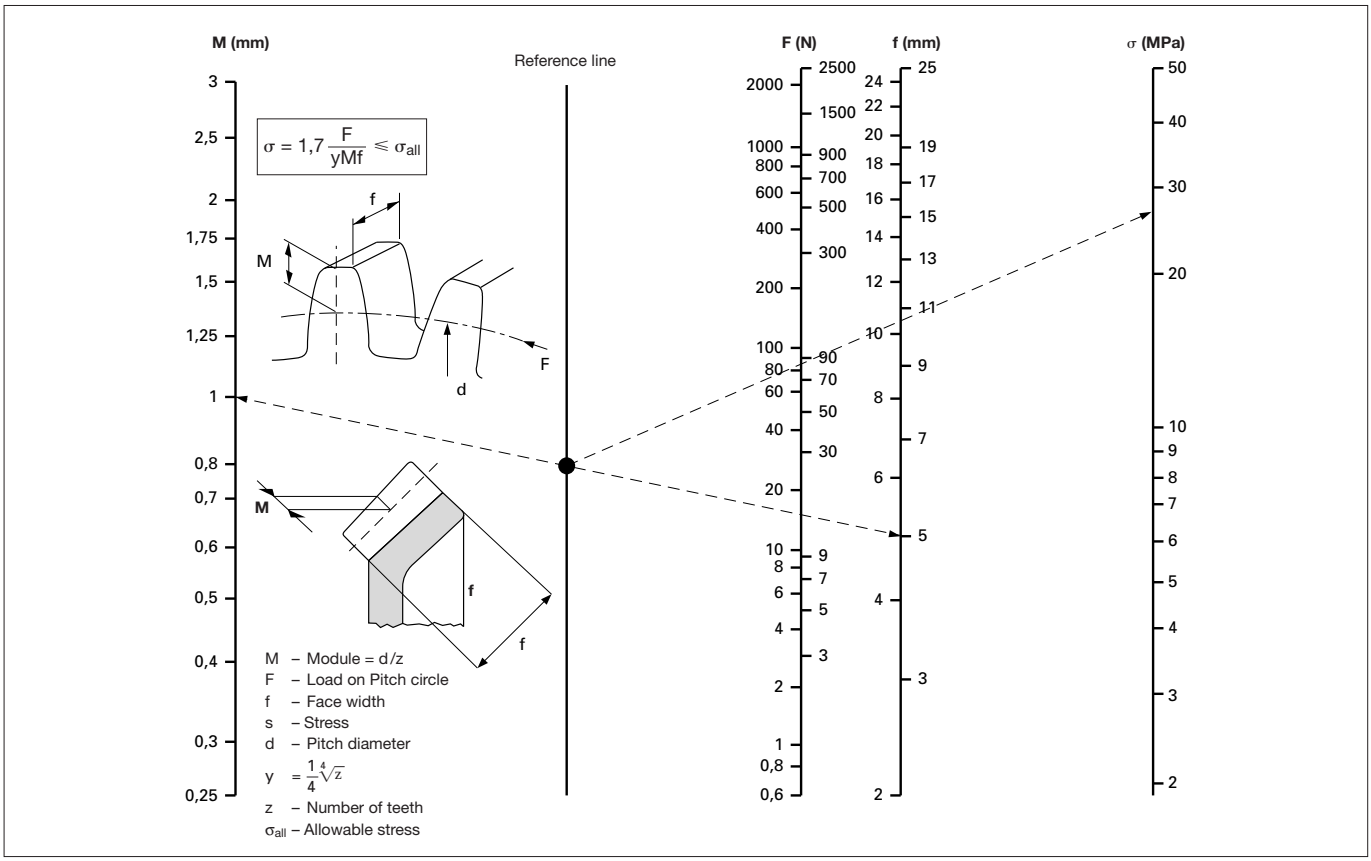

Fig. 8.02 **Gear nomograph and gear design formula**

From a strictly functional and technical point of view, there is no reason to choose a larger tooth size than required. In the case of plastic gear design, the tooth size is often chosen smaller than necessary for the following reasons:

- Smaller teeth, for a given diameter, tend to spread the load over a larger number of teeth
- Less critical moulding tolerances
- Less sensitivity to thermal variations, post moulding shrinkage, and dimensional stability.
- Coarse module teeth are limited by higher sliding velocities and contact pressures.

Gear Proportions

Once the basic gear design parameters have been established, the gear design can be completed. It is very important at this stage to select gear proportions which will facilitate accurate mouldings with minimum tendency for post moulding warpage or stress relief.

An ideal design as far as moulding is concerned is shown in Fig. 8.03.

The other sections depend both on functional requirements and gate location. If, for some reason, it is desirable to have a hub section ‘‘h’’ heavier than the web, then the part must be centre gated in order to fill all sections properly, and the web ‘‘w’’ would be 1,1 t. If the gate must be located in the rin or the web, then web thickness should equal hub thickness, as no section of a given thickness can be filled properly through a thinner one.
The maximum wall thickness of the hub should usually not exceed 6,4 mm. For minimum out-of-roundness, use centre gating. On gears which are an integral part of a multifunctional component or which have to fulfill special requirements as shown in Fig. 8.20-8.25, it could be impossible to approach the ideal symmetrical shape as shown in Fig. 8.03, in which case the assembly must be designed to accept somewhat less accuracy in the gear dimensions.

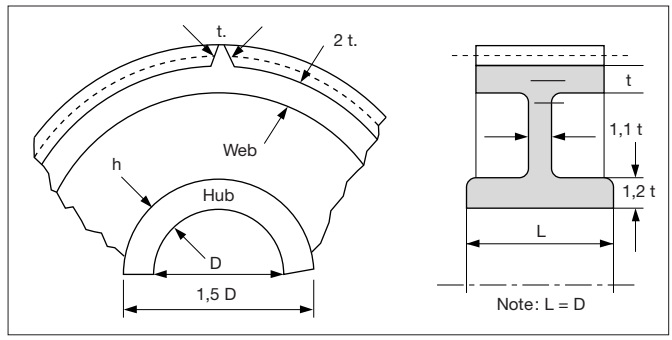

Fig. 8.03 **Suggested gear proportions**

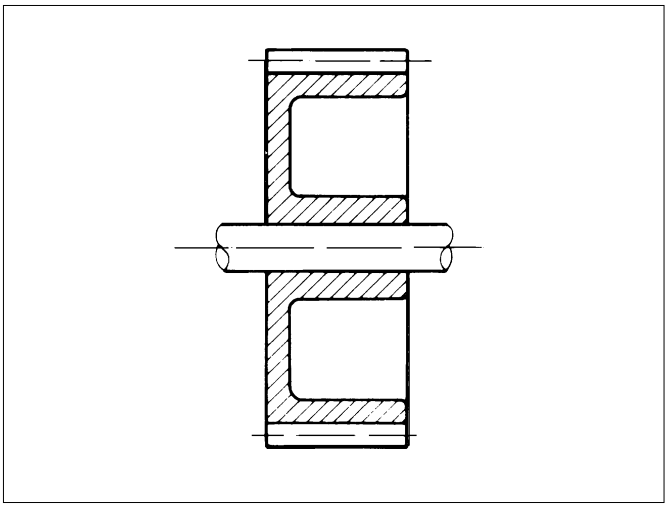

Fig. 8.04 **Gear with off-centre web**

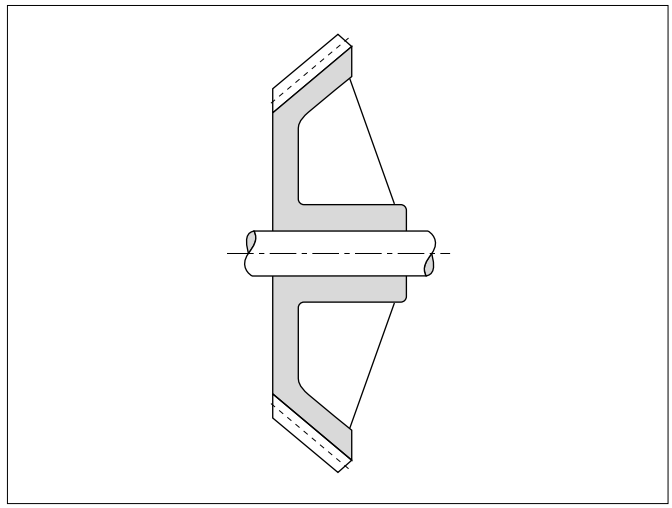

Fig. 8.06 **Ribbed bevel gear**

The following additional examples illustrate a few more gear geometries which could lead to moulding and/or functional problems:

– Relatively wide gears which have the web on one side will be rather difficult to mould perfectly cylindrical, especially if the centre core is not properly temperature controlled. If the end use temperature is elevated, the pitch diameter furthest from the web will tend to be smaller than the pitch diameter at the web. (Fig. 8.04)
– Radial ribs which support the rim often reduce accuracy and should be provided only when strictly required due to heavy axial load. Helical gears are often designed this way, even when the resulting axial load is negligible. (Fig. 8.05)
– On heavily loaded large bevel gears, thrust load on the tooth crown may become considerable and ribs cannot always be avoided. The basic principles for good rib design apply. (Fig. 8.06)
– The same is valid for worm gear drives where the stall torque may produce severe thrust load requiring axial support. For instance, it has been found on windshield wiper gears that ribbing may be necessary to prevent the worm gear from deflecting away from the worm under stall conditions. (Fig. 8.07)
– It must also be understood that any large opening in the web, especially if located close to the teeth, will show up on a gear measuring device and may cause noise or accelerated wear on fast running gears. (Fig. 8.08)
– Fig. 8.09 and 8.10 demonstrate how design and gating sometimes can determine whether a gear fails or performs satisfactorily. Both are almost identical windshield wiper gears moulded onto knurled shafts. The gear on Fig. 8.09 is centre gated and does not create a problem.
– The gear shown in Fig. 8.10 is filled through 3 pin-point gates in the web. In addition, the three holes provided for attaching a metal disc are placed close to the hub. As a result, the thicker hub section is poorly filled and the three weld lines create weak spots, unable to withstand the stresses created by the metal insert and the sharp edges of the knurled surface.

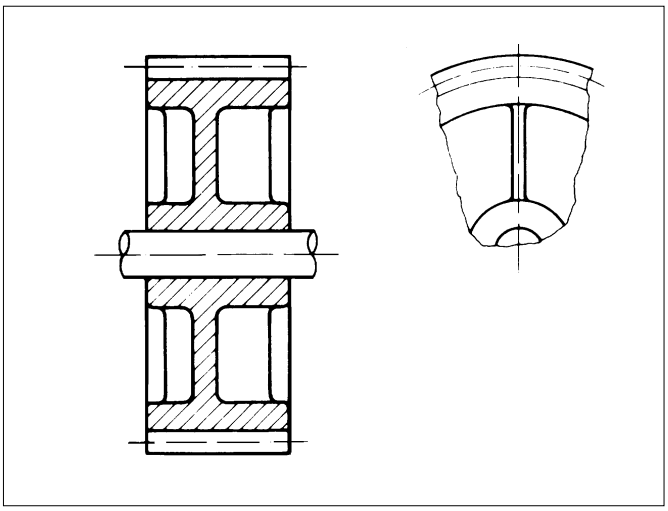

Fig. 8.05 **Effect of radial ribs**

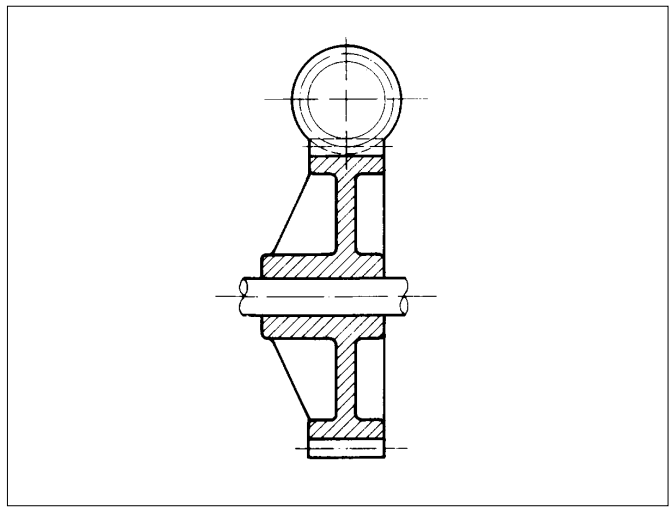

Fig. 8.07 **Ribbed worm take-off gear**

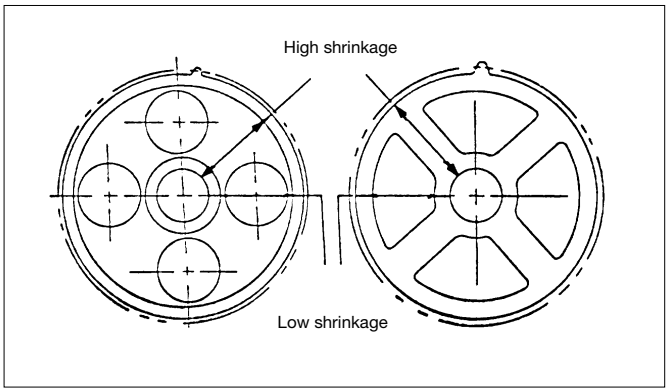

Fig. 8.08 **Holes and ribs in moulded gears**

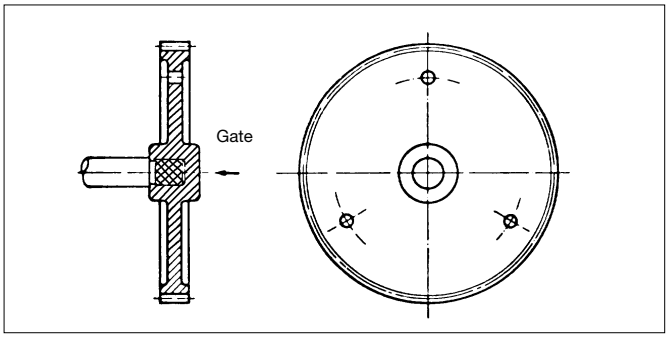

Fig. 8.09 **Centre gated gear**

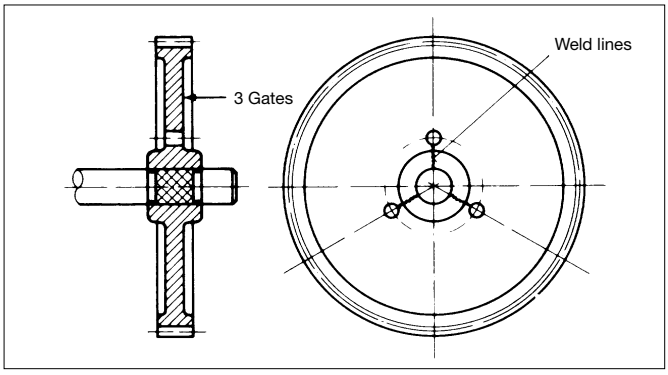

Fig. 8.10 **Web gated gear**

Backlash and Centre Distances

As shown in Fig. 8.11 backlash is the tangential clearance between two meshing teeth. Fig. 8.12 provides a suggested range of backlash for a first approach.

It is essential to measure and adjust the correct backlash at operating temperature and under real working conditions. Many gears, even though correctly designed and moulded fail as a result of incorrect backlash at operating conditions.

In particular, the designer must be aware that backlash may be adequate after a device is assembled, but may change in time and under working conditions due to the following reasons:

– Thermal variations

– Post moulding shrinkage

If the gear box is moulded in a plastic material as well, the same considerations apply. Centre distance may vary and influence backlash, thus the dimensional stability characteristics of the housing material must be considered.

Increased backlash causes the gears to mesh outside the pitch diameter resulting in higher wear. Insufficient backlash may reduce service life or even cause seizing and rapid part destruction.

It is often easier to determine centre distance after having produced and measured the gears. It must be kept in mind that this procedure may produce more wear as the gears may no longer mesh exactly on the theoretical pitch circle.

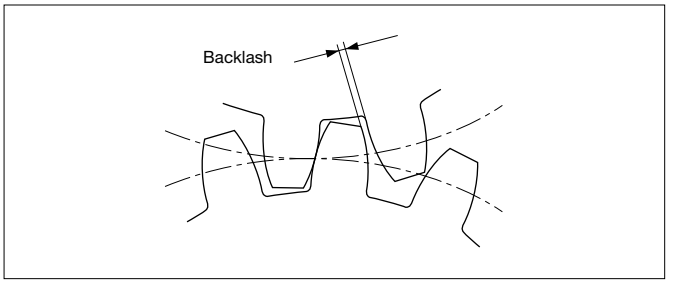

Fig. 8.11 **Measurement of backlash**

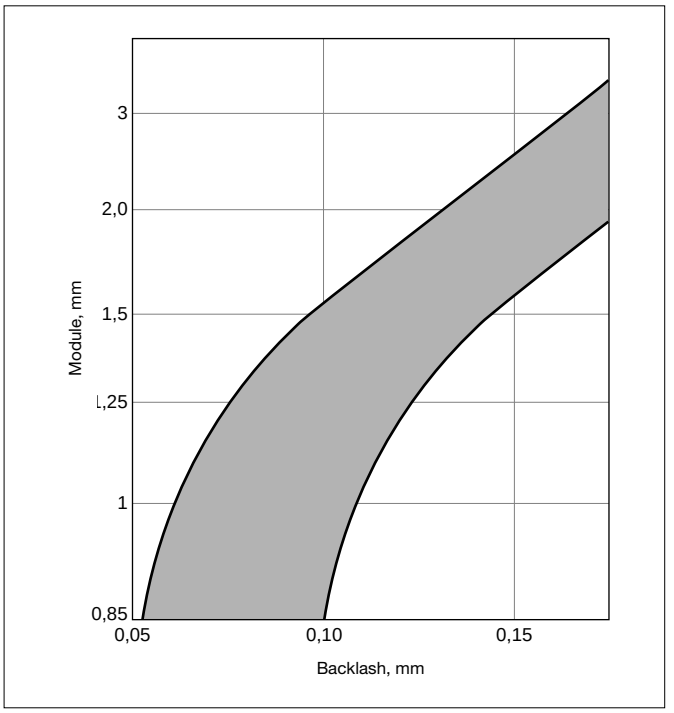

Fig. 8.12 **Suggested backlash for gears of DELRIN® and ZYTEL®**

Mating Material

The coefficient of friction and wear factor of DELRIN® acetal resin on DELRIN® acetal resin are not as good as DELRIN® acetal resin on hardened steel, see Table 7.01. Even so, a great number of commercial applications have entire gear trains made of DELRIN® acetal resin (especially appliances and small precision speed reducers for clocks, timers, and other mechanical devices).

– If two meshing gears are moulded in DELRIN® acetal resin, it does not improve wear to use different grades, as for instance, DELRIN® 100 and DELRIN® 900 F or DELRIN® 500 CL.

– In many cases wear can, however, be significantly improved by running DELRIN® acetal resin against ZYTEL® nylon resin. This combination is especially effective where long service life is expected, and shows considerable advantage when initial lubrication cannot be tolerated.

– In all cases, where two plastic gears run together, allowances must be made for heat dissipation. Heat dissipation depends on the overall design and requires special consideration when both materials are good thermal insulators.

– If plastic gears run against metals, heat dissipation is much better, and consequently a higher load can be transmitted. Very often, the first pinion of a gear train is cut directly into the fast running motor shaft. Heat transmitted through the shaft from the bearings and electric coils can raise the gear teeth temperature above that which might be expected. The designer should pay particular attention to adequate motor cooling.

– Gear combinations of plastic and metal may perform better and show less wear than plastic on plastic. This is, however, only true if the metal gear has a hardened surface.

Table 8.04 **Suggested mating material choice for spur gears of DELRIN® acetal resin**

Driving Gear	Meshing Gear	
DELRIN® 500	DELRIN® 500	General purposes, reasonable loads, speed and service life, such as clock and counter mechanisms.
DELRIN® 100	DELRIN® 100	Applications requiring high load, fatigue and impact resistance, such as: hand drill presses, some appliances, windshield wiper gears, washing machine drives (esp. reversing). Gears combined with ratchets, springs or couplings.
DELRIN® 500 soft metals	DELRIN® AF	Small mechanism gear drives requiring non slip-stick behaviour and less power loss (e.g., measuring instruments, miniaturized motor speed reducers). This combination does not necessarily give better performance as far as wear is concerned.
Hardened Steel (surface hardness approx 50 Rc)	DELRIN® 100	Excellent for high speed and load, long service life and low wear. Especially when used for the first reduction stage of fast running motors where the pinion is machined into the motor shaft (e.g., appliances, drill presses and other electric hand tools).
Soft steel, non-ferrous metals	DELRIN® 500 CL	Combined with soft metals, DELRIN® 500 CL gives considerably better results in wear than all other grades. In addition, it has little effect on the metal surfaces. Recommended for moderate load but long service life (e.g., high quality precision gear mechanisms).

Table 8.05 **Suggested mating material choice for gears of ZYTEL® nylon resin**

Driving Gear	Meshing Gear	
ZYTEL® E101 L	ZYTEL® E101 L	Very common usage in light to moderate load applications.
Hardened Steel	ZYTEL® E101 L	Recommended for high speed, high load applications. Best sound and shock absorption. Longest wearing.
ZYTEL® E101 L	DELRIN® 100, 500 and 900	Lowest friction and wear compared to either material running against steel 500, 900or against itself. Highly recommended for moderate duty. Best where no lube is permissible. Either material can be the driver, however, the better dimensional stability of DELRIN® acetal resin makes it the logical choice for the larger gear.

Lubrication

Experience has shown that initial lubrication is effective for a limited time. Units disassembled after completion of their service life showed that all the grease was thrown on the housing walls; hence the gears ran completely dry. Initial lubrication does not allow a high load, it should be considered as an additional safety factor. *It should, however, always be provided as it helps greatly during the run-in period.*

On applications where lubricant cannot be tolerated, the combination of DELRIN® acetal resin and ZYTEL® nylon resin offers great advantages. Even under dry conditions such gear trains run smoothly and with little noise.

Where continuous lubrication of gears in DELRIN® acetal resin and ZYTEL® nylon resin is practical, and where surface pressure on the meshing teeth is not excessive, wear is negligible and service life is determined exclusively by fatigue resistance.

Testing Machined Prototypes

Though it would appear that the easiest way to determine whether a proposed gear will show the expected performance would be to test machined prototypes, results thus obtained must be interpreted with great care. A designer has no guarantee that a subsequently moulded gear will have the same performance characteristics. Therefore no final conclusion can be drawn from test results using machined gears. Making a trial mould is the only safe way to prototype a gear design. It allows not only meaningful tests but also the measurement of shrinkage, tooth profile, pitch diameter and overall accuracy.

It is highly recommended to check tooth quality on a profile projector which enables detection of deviation from the theoretical curve.

Prototype Testing

The importance of adequate testing of injection moulded prototype gears has been emphasized. Here are some guidelines:

Accelerated tests at speeds higher than required of a given application are of no value.

Increasing temperature above normal working temperature may cause rapid failure whereas under normal working conditions the gear may perform well. Test conditions should always be chosen to come as close as possible to the real running conditions.

The following examples further explain the need for meaningful end-use testing.

- Gears under a high load (e.g., in appliances) which operate only intermittently should not be tested in a continuous run, but in cycles which allow the whole device to cool down to room temperature between running periods.
- Infrequently operated, slow-running gears (such as window blinds) can be tested in a continuous run but at the same speed, providing temperature increase on the tooth surfaces remains negligible.
- Other applications like windshield wiper gears reach their maximum working temperature quickly, and operate most of their service life under these conditions. They should therefore be tested on a continuous-run base.

Valuable conclusions can often be drawn from the static torque at which a moulded gear fails. If breaking torque proves to be 8-10 times the operating load, it can usually be taken as an indication that the gear will provide a long service life in use. However, plastic gears often operate very close to the endurance limit, and the above relation should not be considered as valid in all cases.

In any event, backlash must be checked during all tests. Once a gear has failed, it is almost impossible to determine whether incorrect backlash was partially or entirely responsible.

Helical Gear Design

Whenever possible, helical gears should be used in preference to spur gears. Among other advantages they run more smoothly and have less tendency to squeak. However, they require not only perfect tooth profiles but also exactly matching helix angles. This requirement is sometimes difficult to fulfill, especially if the plastic gear meshes with a metal gear.

Helical gears generate axial thrust which must be considered. It is advisable to use helix angles not greater than 15°. Compared to a spur gear having the same tooth size, a helical gear has slightly improved tooth strength. Since small helix angles are most commonly used, this fact can be neglected when determining the module and it should be considered as an additional safety factor only.

Worm Gear Design

Most machined worm gears are provided with a throated shape which provides a contact line of a certain length on the worm. Because this system cannot easily be applied on moulded plastic gears, a simple helical gear is normally used. Consequently, the load is transmitted on contact points which increases surface pressure, temperature and wear.

Various attempts have been made, aimed at improving wear and increasing power transmission, to change the contact points to contact lines. The following examples of practical applications demonstrate some possibilities along this line.

Fig. 8.13 shows a one-piece moulded worm gear in DELRIN® 100 meshing with a worm in ZYTEL® E101 L for a hand-operated device. The undercut resulting from the throated shape amounts to about 4% and can therefore be ejected from the mould without problems. This principle of moulding and ejecting a one-piece worm gear is used in quite a number of applications even though it requires experience and skilled tool making. It is interesting to note that this particular worm with 7 leads cannot be moulded in a two-plate mould with the parting line on the centre.

The lead angle of 31° being greater than the pressure angle (20°), results in an undercut along the parting line. Therefore, the worm must be unscrewed from the mould.

Fig. 8.14 shows a windshield wiper gear produced in a different way. Because of the undercut of about 7% and the rigid structure, ejecting becomes impossible.
The tool is therefore provided with 9 radial cores, each of which covers 6 teeth. This procedure produces an excellent worm gear but is limited to single cavity tools. Tooling cost is of course higher.

The worm gear in Fig. 8.15 is again for a windshield wiper drive and based on an intermediate solution. It is composed of a half-throated and a helical gear portion.

The tooth contact takes place on the curved section whereas the helical part merely improves the tooth strength and therefore the stall torque. Even though this solution is not ideal, it nevertheless offers a significant advantage over a simple helical worm gear.

A full throated worm gear is shown in Fig. 8.16 in the shape of a split worm gear. The two halves are designed in such a way that components in the same cavity can be fitted together, centered and the teeth perfectly aligned by means of lugs fitting into corresponding holes (see also Fig. 8.17). Thus, a single cavity provides a complete gear assembly which is held together by means of snap-fits, ultrasonic welding or rivets. As required by production, multi cavities can be added later. The gears can be made as wide as necessary limited only by proper meshing.

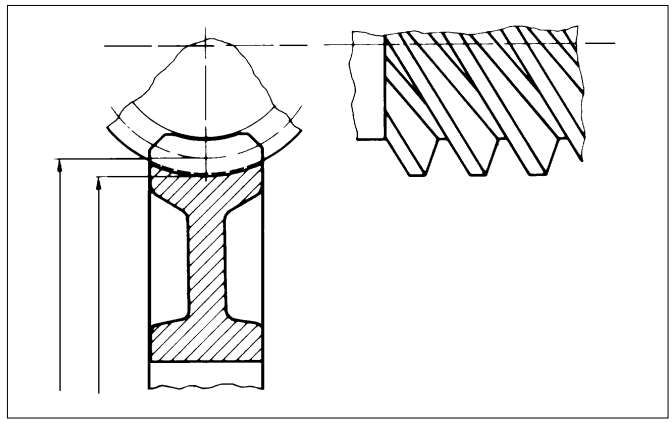

Fig. 8.13 **One piece worm gear**

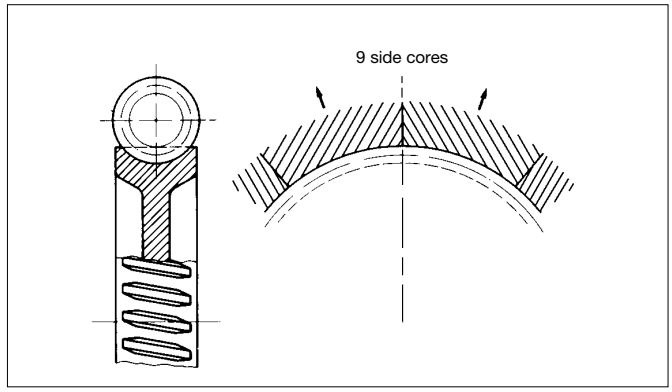

Fig. 8.14 **Side-cored worm gear**

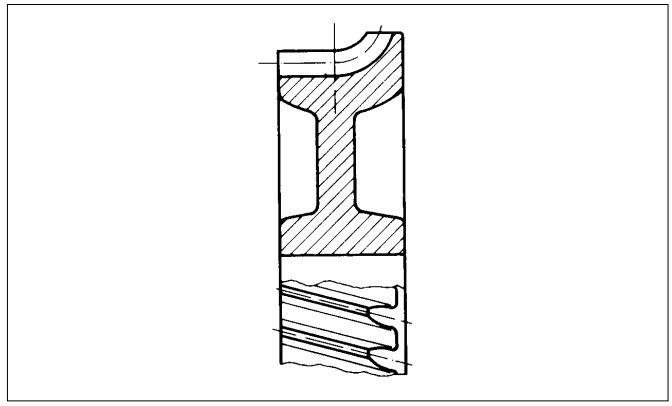

Fig. 8.15 **Half throated worm gear**

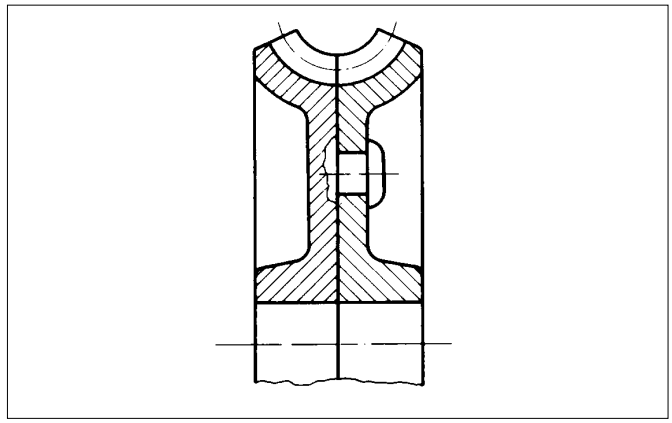

Fig. 8.16 **Split worm gear**

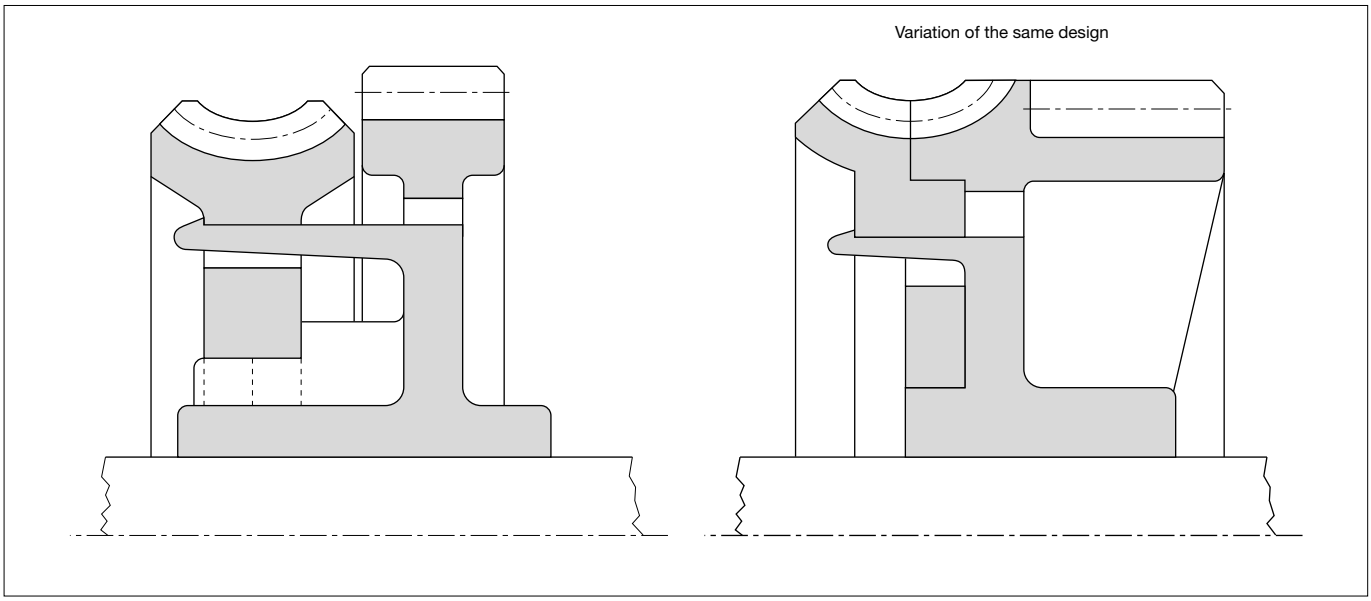

Fig. 8.17 **Snap-fit split worm gear**

This design comes closest to the classic machined metal full throated worm gear, and tooling costs are no higher than for the gear shown in Fig. 8.15. Split worm gears are especially recommended for larger worm diameters, where performance is improved considerably.

The advantage of throated over helical worm gears stems primarily from the load being spread over a larger area of the tooth, resulting in lower localized temperature and reduced bending stress. Tests with the split worm gear show it to be superior to a helical worm gear by a factor of 2-4.

An example of a snap-fit helical gear is shown in Fig. 8.17.

Certain limitations should be kept in mind in the design of these throated worm take-off gears when compared to simple helical gears, as follows:

– Higher tooling cost.

– Requirement of perfect centering of worm and worm gear. Even small displacements cause the load to be carried by only a portion of the tooth width, resulting in increased wear or rapid failure.

– The worm gear drive is more sensitive to discrepancies of the lead angles which must match perfectly.

– The worm and the gear must be assembled in a certain way. If for instance the worm is mounted first into the housing a throated gear can be introduced only in a radial direction, whereas a simple helical gear (or a gear as shown in Fig. 8.13) can be mounted sidewise.

Worm gear drives allow high speed reductions with only two elements. Consequently, they often are used in connection with fast running motors, with the worm cut directly or rolled into the metal shaft.

Since the requirements are quite different in various applications, the performance and limitations of worm gears in DELRIN® acetal resin and ZYTEL® nylon resin will depend upon the specific application.

For instance, a windshield wiper gear may run repeatedly for a considerable length of time and at high temperature. It can, in addition, be submitted to severe stalling torques if the windshield wiper blades are frozen. Since this happens at low temperatures, the gear diameter is smaller due to thermal contraction, causing the teeth to be loaded closer to the tip and thus increasing stress. Often it is this condition which controls the gear design.

On the contrary, an electric car window drive works under normal conditions only a few seconds at a time, with long intervals. Consequently, where is no time for a temperature rise and the gear can thus withstand higher loads. Since the total service life, compared to a wind-shield wiper, is very short, wear is rarely a problem. Many of these power window mechanisms will lock up substantial torque with the window closed. The gear must be strong enough that creep does not cause significant tooth distortion, particularly under closed car summer conditions.

In appliances, requirements are again quite different. The working time is usually indicated on the device and strictly limited to a few minutes at a time. This allows the use of smaller motors which are overloaded, heating up very fast and transmitting temperatures to the shaft and the worm. If the appliance is used as prescribed, temperature may not exceed a reasonable limit. If, however, the devices are used longer or at frequent intervals, temperature can reach a level at which high wear and premature failure can occur.

These examples demonstrate the necessity of carefully defining the expected working conditions, and of designing and dimensioning the worm and gear accordingly.

In addition to the limitations mentioned previously, other factors to be carefully considered are:

– Metal worms cut directly into motor shafts usually have very small diameters. Unless supported at both ends, overload and stalling torques cause them to bend, and lead to poor meshing.
– Under the same conditions, insufficiently supported plastic worm gears are deflected axially, with the same results.
– In cases where worms are cut into small-diameter motor shafts, tooth size is considerably limited. Actually, many worm gear drives, especially on appliances, work only satisfactorily as long as the initial lubrication is efficient. With regard to the relatively short total operating lifetime, performance may nevertheless be acceptable.

Even though initial lubrication has limited efficiency in time, it is highly recommended for all worm gear drives, since friction is the main problem. Moreover, whenever possible, proper steps should be taken to keep the lubricant on the teeth. It is also advisable to choose a grease which becomes sufficiently liquid at working temperature to flow and thus flow back onto the teeth. In cases where severe stalling torques are applied on the gear, bending stresses must be checked as well. For this purpose, the gear nomograph in Fig. 8.02 can be used. As noted previously, load is concentrated on a very small area of helical take-off gears which causes uneven stress distribution across the width. Consequently, the tooth face *f* used in the nomograph for determining stall torque stresses should not be more than approximately two times the tooth size. For a metric module of 1, f = 4 mm.

It is advisable that bending stresses should not exceed approximately 30 MPa at room temperature.

Some manufacture machine worm take-off gears from moulded blanks. If there is a valid reason for making gears this way, it is important that the tooth spaces be moulded in the blank in order to prevent voids in the rim section. Many plastic worm gears fail due to tiny voids in the highly stressed root area of the teeth because the rim was moulded solid. (The same is valid for other types of gears.)

The majority of worm gear applications use single threaded worms with helical worm gears. The teeth of the helical gear are weaker than the threads of the worm, thus output will be limited by the torque capacity of the gear. This can be determined as mentioned previously using the nomograph Fig. 8.02. A liberal safety factor (3-5) should be applied to take into account the stress concentration due to theoretical point contact as well as the high rubbing velocity. With ZYTEL® nylon resin as the worm and DELRIN® acetal resin as the gear, heat dissipation is limiting, as both materials are not good conductors of heat. Thus, it is recommended rubbing velocities be less than 7,6 m per minute. With a steel worm, heat dissipation is markedly improved, and rubbing velocities as high as 76 m per minute can be tolerated with initial lubrication. With continuous lubrication or intermittent operation, speeds as high as 152 m per minute are possible.

Table 8.06 **Worm gear mating material**

Worm Material	Gear Material	Possible Applications
Soft steel (machined DELRIN® 500 CL or rolled)	DELRIN® 500 CL	Excellent wear behaviour; can be considered for small devices (e.g. appliances, counter, small high quality mechanical speed reducers).
Soft steel and hardened steel	DELRIN® 100	Less wear resistant, improved fatigue and impact strength, for high stalling torques (e.g. windshield wipers, car window mechanisms, heavily loaded appliances like meat grinders where impact load must be expected). Worms in hardened steel give far better wear results.
Non ferrous metals (brass, zinc-alloys)	DELRIN® 500 CL	DELRIN® 500 CL has proven to give superior wear results compared to all other DELRIN® acetal resin grades even though heat build-up is not better. (Used in speedometers, counters and other small devices).
ZYTEL® E101 L (66 Nylon resin)	DELRIN® 500 DELRIN® 100	Excellent for hand-operated or intermittent use, low speed devices (e.g. window blinds; car window mechanisms; continuously running, small-speed reducers where load is negligible, such as speedometers, counters). Very good dry-running behaviour.
DELRIN® 500	DELRIN® 500	Should be avoided on the basis of unfavourable wear behaviour and high coefficient of friction. It is nevertheless used in many small slow-running mechanism where load is extremely low.

Mating Material

Generally speaking, all worm gear speed reducers are inefficient due to high sliding velocity, which converts a large percentage of the power into heat. Therefore, it is important to choose mating materials which have low wear and friction. Along this line, a worm in ZYTEL® 101 running against a gear in DELRIN® acetal resin is a good combination. Because heat dissipation is poor, this combination is limited to light duty applications.
The can opener shown in Fig. 8.18 is a good example of a commercial design using this combination of materials.

The motor speed of 4000 rpm is reduced in the first stage with a pinion and an internal gear before driving the worm in ZYTEL® 101. Working cycles are, however, so short that no significant heat build-up can take place.

Fillet Radius

Most gear materials are not sensitive, including DELRIN® acetal resin and ZYTEL® nylon resin. Thus, the importance of proper fillet radius cannot be over emphasized. Standard fillets have proved satisfactory in most applications. It has been found that the use of a full rounded fillet will increase the operating life of gears of DELRIN® acetal resin approximately 20% under continuously lubricated conditions. Full rounded fillets may also prove advantageous where shock or high impact loads are encountered.

Methods of Fastening

The involute spline (Fig. 8.19 A) is by far the best method of fastening plastic gears to shafts.

Keys and set screws, although they have been used successfully, should be avoided as they require an unbalanced geometry in the hub. If set screws are used, they must bottom in a recess in the shaft. Interference fits can be used providing the torque requirements are low. Stress relaxation of the plastic material may result in slippage. Knurling the shaft can be helpful. Also grub screws (Fig. 8.19 B) should not be used to transmit even low torques. Plastic may break during assembly or creep in use.

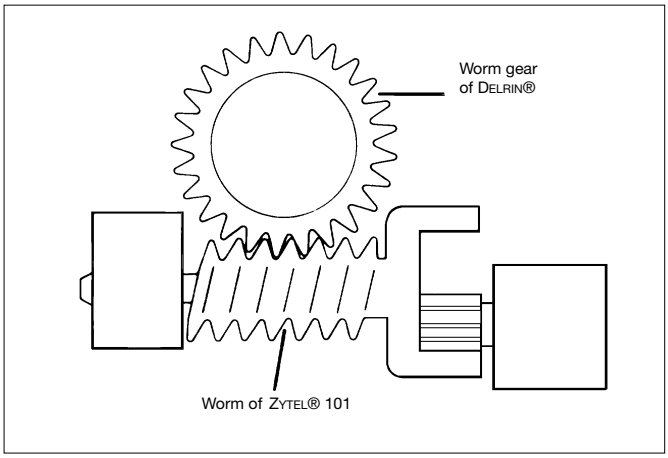

Fig. 8.18 **Can opener with worm drive**

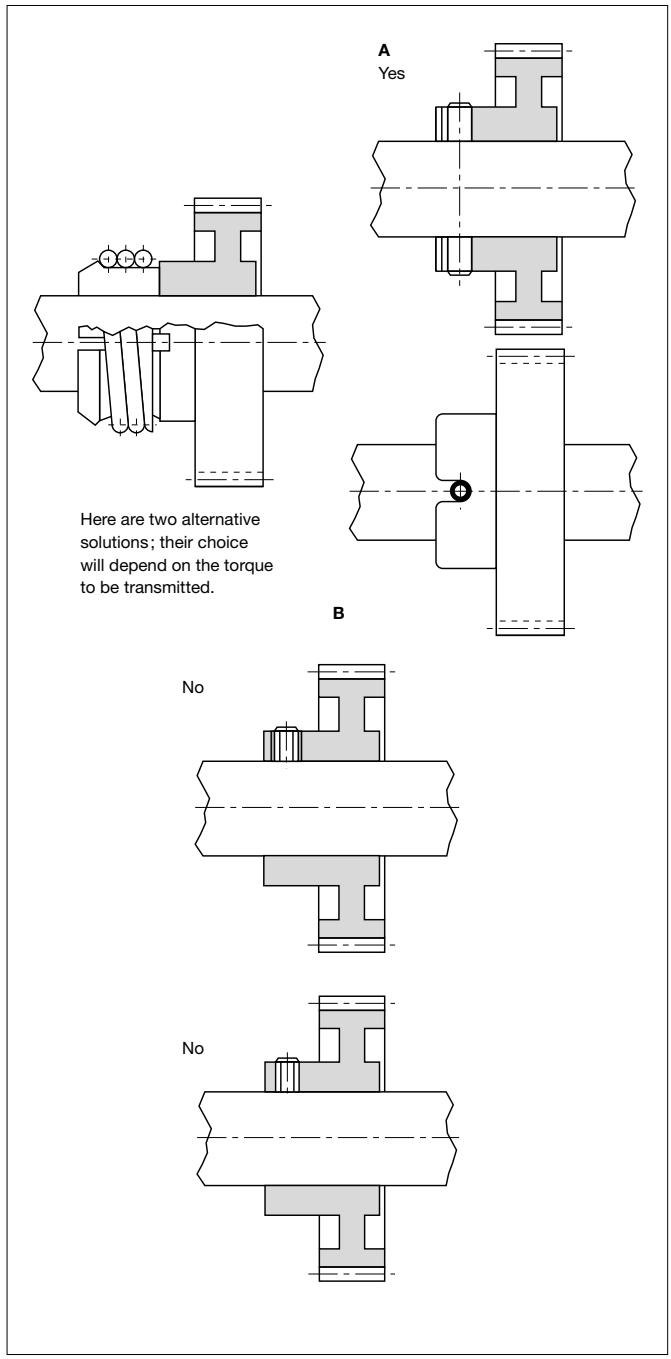

Fig. 8.19 **Alternatives for grub screws**

The use of moulded-in inserts has been successful in gears of DELRIN® acetal resin and ZYTEL® nylon resin. The most common insert of this type is a knurled shaft.

Circumferential grooves in the knurled area can be used to prevent axial movement with helical, worm or bevel gears. Stamped and die cast metal inserts have also been used successfully. Engine timing sprockets mentioned previously use a die cast aluminium insert with incomplete teeth. ZYTEL® nylon resins is moulded over the insert to form the teeth. This is a good example of using the best properties of both materials to achieve a dimensionally stable, low cost, improved timing gear. Screw machine inserts have been used. It is important that materials with sufficiently high elongation be selected for use with moulded-in metal inserts so that the residual stress resulting from mould shrinkage will not result in stress cracking around the insert. Any of the ZYTEL® nylon resins are suitable in this regard. DELRIN® acetal resins have generally lower elongation than ZYTEL® nylon resins and have higher creep resistance, thus latent cracking can occur over moulded-in inserts with resins such as DELRIN® 500 and 900. However, DELRIN® 100 ST has very high elongation and is recommended for use with moulded-in inserts. Inserts can be pressed or sonically inserted to reduce residual stress.

Stampings have been employed in the form of plates fastened to the web of the gear with screws or rivets, or by sonic staking.

With any fastening method, it is important to avoid stress risers. Fillets on the splines, inserts, etc., are extremely important.

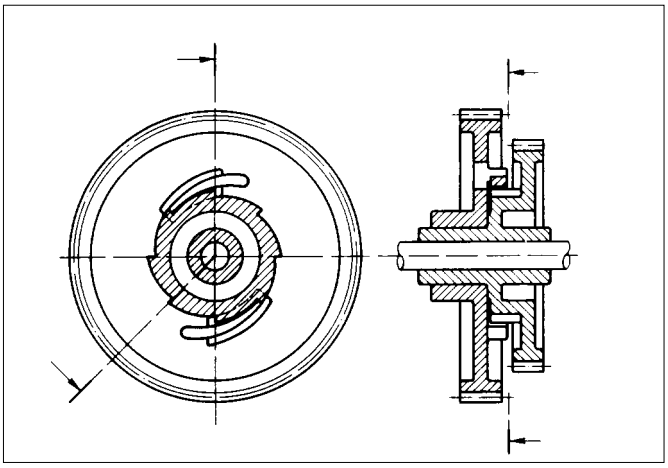

Fig. 8.20 **Ratchet and gear combined**

Combined Functions – Design Examples

As mentioned previously, plastic gears offer large economic advantages over metal gears, and the greatest cost savings can come from combining an almost unlimited number of elements and functions in one single part.

Fig. 8.20–8.25 demonstrate a few design examples along this line:

– In this example (Fig. 8.20), a gear in DELRIN® acetal resin is provided with moulded-in springs acting on a ratchet wheel in ZYTEL® 101 nylon resin, which in turn is combined with another gear. There exist many various types of ratchets in DELRIN® acetal resin which function properly, providing the springs are not held in the loaded position for a long period of time.

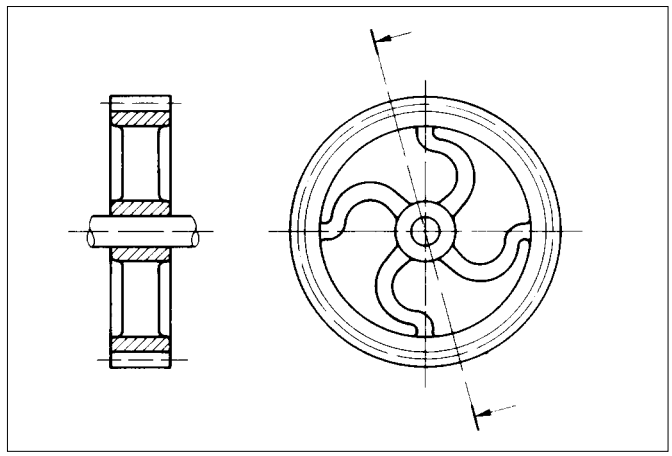

Fig. 8.21 **Impact resistant web**

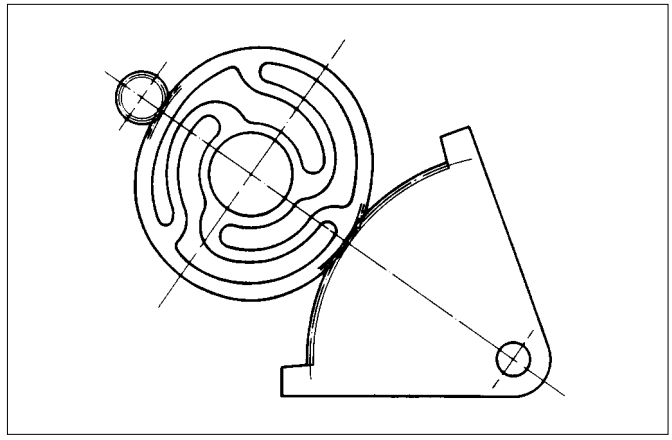

Fig. 8.22 **Backlash-free gear**

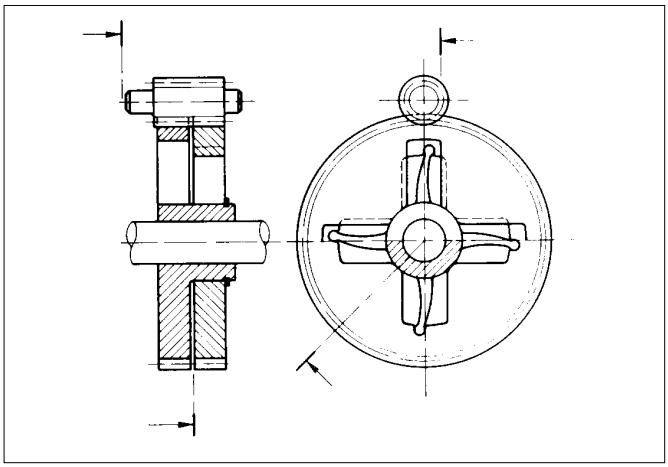

Fig. 8.23 **Backlash-free gear**

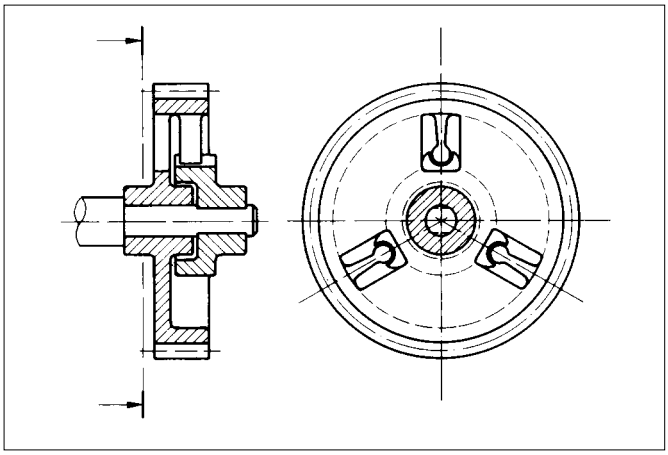

Fig. 8.24 **Torque limiting gear**

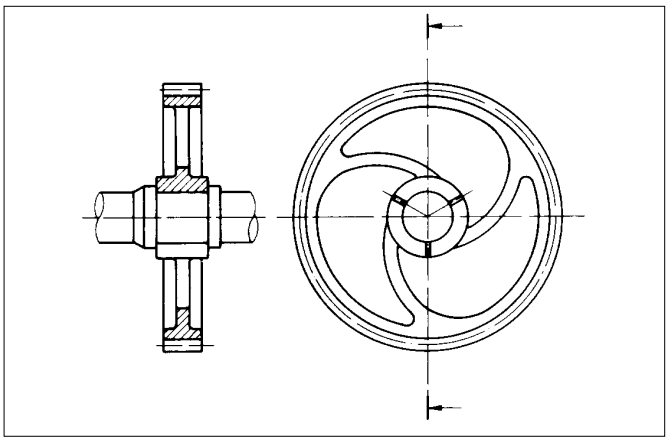

Fig. 8.25 **Gear with sliding coupling**

– In many cases, it is highly desirable to protect the teeth against impact load. This can be achieved, as is shown in Fig. 8.21, in connecting the hub and the rim by properly dimensioned flexible elements. Sometimes, this solution also is used on printing wheels in order to obtain consistent printing results without the need for precision tolerances.

– Fig. 8.22 is a backlash-free adjusting arrangement for an automobile clock. The motion is transmitted from the pinion to the segment by means of a flexible gear. When assembled, the gear is ovalized, thus applying a certain preload onto the pinion and the segment. As the transmitted torque is very small, stress relaxation does not jeopardize proper function. In addition, each time the mechanism is actuated, the oval gear moves into another position, thus increasing the preload and allowing the previously loaded section to recover. As an unusual additional feature, the segment is provided with two stops for limiting its movement. When a stop comes into contact with the gear, the pinion can be turned further without causing any damage to the system because the teeth slip over the flexing gear.

– Fig. 8.23 is another design suggestion for a backlash-free motion transmission between two gears. The main gear is equipped with moulded-in springs fitting into corresponding slots on the second gear. When assembled with the pinion, the two tooth crowns are slightly offset, causing the springs to be loaded and thus suppress any backlash. Here again, stress relaxation causes the force to decrease. The principle is adequate for only small torques such as those found on instrument dials or clock adjusting mechanisms.

– Torque limiting devices are quite often very useful for plastic gears in order to prevent tooth damage when overloading occurs (for instance on high torque transmissions like meat grinders, can-openers and hand drill presses). Fig. 8.24 shows one solution out of many other possible designs. It is essential that the springs do not remain accidentally in the loaded position. In the example shown, this is achieved by providing three pivoting springs.

– For specific requirements, it is also possible to combine gears with sliding couplings. The example shown in Fig. 8.25 is a gear in DELRIN® acetal resin snapped onto a shaft in ZYTEL® 101, in which the split hub acts as a coupling for a small dial setting device. If, as in this case, the required torque is very low, stress relaxation in the springs will not endanger perfect functioning for a sufficient length of service life. If, on the contrary, a constant torque must be transmitted for a long period of time, an additional metal spring around the hub would be required to keep the force constant.

When to use DELRIN® Acetal Resin or ZYTEL® Nylon Resin

ZYTEL® nylon resin and DELRIN® acetal resin are excellent gear materials, used extensively in a variety of applications. The choice of one over the other may at first seem unclear, but as one examines the specific requirements of the application, it becomes relatively easy. Although the two materials are similar in many ways, they have distinct property differences, and it is these differences upon which the selection is made. Some guidelines are as follows:

ZYTEL® Nylon Resin

- Highest end-use temperature
- Max. impact and shock absorption
- Insert moulding
- Max. abrasion resistance
- Better resistance to weak acids and bases
- Quieter running

DELRIN® Acetal Resin

- Best dimensional stability
- Integrally moulded springs
- Running against soft metals
- Low moisture absorption
- Best resistance to solvents
- Good stain resistance
- Stiffer and stronger in higher humidity environment

As previously pointed out, running DELRIN® acetal resin and ZYTEL® nylon resin against each other results in lower wear and friction than either material running against steel (not always true when high loads are encountered and heat dissipation is controlling). Some designers have used this combination in developing new, more efficient gear systems.

When properties of DELRIN® acetal resin are needed, DELRIN® 100 is the preferred gear material. As previously stated, DELRIN® 100 outperforms DELRIN® 500 by about 40%. DELRIN® 100 is the most viscous in the melt state, and cannot always be used in hard to fill moulds. DELRIN® 500 and 900 have been used successfully in many such cases.

When ZYTEL® nylon resin is the chosen material, ZYTEL® E101 L is the most common material used. ZYTEL® E103 HSL, a heat stabilized version of ZYTEL® E101 L, should be specified if the service life and end use temperature are high.

Glass reinforced versions of either material should be avoided. The glass fibres are very abrasive and the wear rate of both the plastic gear and the mating gear will be high. Gears which operate for extremely short periods of time on an intermittent basis have been used with glass reinforcement to improve stiffness, strength or dimensional stability. Very careful testing is mandatory.
The moulding conditions must be controlled carefully, not only for the usual purpose of maintaining gear accuracy, but also because glass reinforced resins will exhibit large differences in surface appearance with changes in moulding conditions, particularly mould temperature. It is possible to vary mould temperature without changing dimensions, by compensating through adjustments in other process variables. Thus, establish surface smoothness specifications to be sure the type of gear surface tested is reproduced in mass production.

9 – Assembly Techniques – Category I Screws, Press-Fit, Snap-fit

Introduction

Plastic parts can be joined using a variety of assembly techniques; some of them allowing disassembly (category I), others creating a permanent joint (welding, category II).

– *Mechanical Fasteners*
The self-tapping screw cuts or forms a thread as it is inserted, eliminating the need for moulding an internal thread or a separate tapping operation.

– *Press-Fits*
This technique provides joints with high strength at low cost. In general, suggested interferences are larger between thermoplastic parts than metal parts because of the lower elastic modulus. The increased interference can produce production savings due to greater latitude in production tolerances. The effects of thermal cycling and stress relaxation on the strength of the joint must be carefully evaluated.

– *Snap-Fits*
Snap fitting provides a simple, inexpensive and rapid means of assembling plastic parts. Basically, a moulded undercut on one part engages a mating lip on the other. This method of assembly is uniquely suited to thermoplastic materials due to flexibility, high elongation and ability to be moulded into complex shapes.

– *Spin Welding (see Chapter 10)*
Spin welding produces welds that are strong, permanent and stress free. In spin welding, the part surfaces to be welded are pressed together as they are rotated relative to each other at high speed. Frictional heat is generated at the joint between the surfaces. After a film of melted thermoplastic has been formed, rotation is stopped and the weld is allowed to seal under pressure.

– *Ultrasonic Welding (see Chapter 10)*
Similar plastic parts can be fused together through the generation of frictional heat in ultrasonic welding. This rapid sealing technique, usually less than two seconds, can be fully automated for high speed and high production. Close attention to details such as part and joint design, welding variables, fixturing and moisture content is required.

– *Vibration Welding (see Chapter 10)*
Vibration welding is based on the principle of friction welding. In vibration welding, the heat necessary to melt the plastic is generated by pressing one part against the other and vibrating it through a small relative displacement at the joint. Heat generated by the friction melts the plastic at the interface. Vibration is stopped and the part is automatically aligned; pressure is maintained until the plastic solidifies to bond the parts together. The bond obtained approaches the strength of the parent material.

– *Hot Plate Welding (see Chapter 10)*
Hot plate welding is a technique used for joining thermoplastic parts. Non symmetric parts with fragile internal components are suitable for this technique.

– *Cold or Hot Heading/Riveting (see Chapter 10)*
This useful, low-cost assembly technique forms strong, permanent mechanical joints. Heading is accomplished by compression loading the end of a rivet while holding and containing the body.

– *Adhesion Bonding (see Chapter 10)*
This technique is used to join plastics or plastics and dissimilar materials. It is useful when joining large or complicated shapes. Details on methods and techniques will be found in the individual product sections.

Design for disassembly

In order to reduce the impact on the environment as much as possible, the design and the material should be selected to allow the most efficient use of the part over its service life. This may included re-use of the part or some of its components. For this reasson, it is really important to “design for Disassembly”. In chapter 10 information and recommendations related to this subject are given, which should help designers in creating more optimal solutions.

Mechanical Fasteners

Self-Tapping Screws

Self-Tapping screws provide an economical means for joining plastics. Dissimilar materials can be joined together and the joint can be disassembled and reassembled.

The major types of self-tapping screws are thread forming and thread cutting. As the name implies, thread forming screws deform the material into which they are driven, forming threads in the plastic part. Thread cutting screws on the other hand, physically remove material, like a machine tap, to form the thread. To determine what kind of self-tapping screw is best for a job, the designer must know which plastic will be used, and its modulus of elasticity.

If the modulus is below 1400 MPa, thread forming screws are suitable, as the material can be deformed without entailing high hoop stress.

When the flexural modulus of a plastic is between 1400 and 2800 MPa, the proper type of self-tapping screw becomes somewhat indeterminate. Generally speaking, the stress generated by a thread forming screw will be too great for this group of resins, and thread cutting screws should be employed. However, plastics such as ZYTEL® nylon resin and DELRIN® acetal resin work well with thread forming screws.

Thread cutting screws are still preferred unless repeated disassembly is necessary.

Thread forming screws *AB* and *B*, shown in Fig. 9.01 are fast driving, spaced-thread screws. The *BP* screw is much the same as the *B* screw except that it has a 45° included angle and unthreaded cone points. The cone point is useful in aligning mating holes during assembly. The *U* type, blunt point, is a multiple-thread drive screw intended for permanent fastening. The *U* type screw is not recommended where removal of the screw is anticipated. Special thread forming screws, like the Trilobular, which are designed to reduce radial pressure, frequently can be used for this range of modulus of elasticity, see Fig. 9.02.

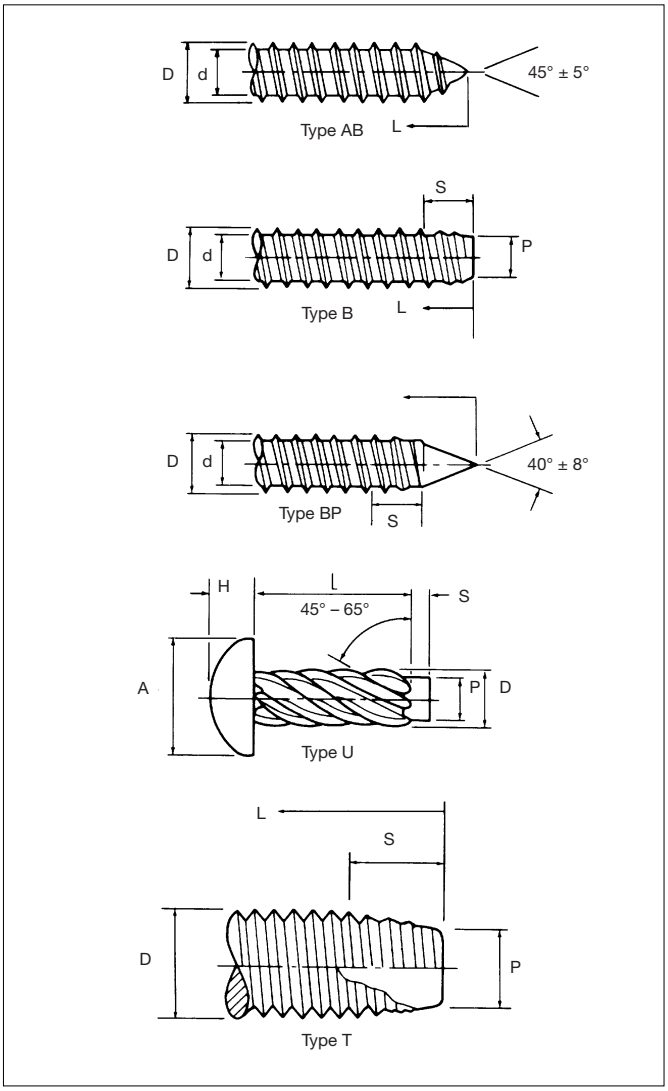

Fig. 9.01 **Types of self-tapping screws**

Another unique thread form, the Hi-Lo fastener, has a double lead thread where one thread is high and the other low. A sharp 30° included thread angle allows for a deeper cut into the material and reduces the hoop stress that would be generated by a conventional 60° thread angle form. Another design feature is that the Hi-Lo screw has a smaller minor diameter than a conventional screw.

Trilobe
Triangular configuration designed by Continental Screw Co. (and licensed to other companies) is another technique for capturing large amounts of plastic. After insertion, the plastic cold-flows or relaxes back into the area between lobes. The Trilobe design also creates a vent along the length of the fastener during insertion, eliminating the "ram" effect in some ductile plastics, pressure builds up in the hole under the fastener as it is inserted, shattering or cracking the material.

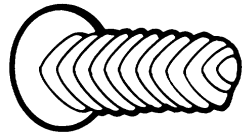

Sharp Thread
Some specials have thread angles smaller than the 60° common on most standard screws. Included angles of 30° or 45° make sharper threads that can be forced into ductile plastics more readily, creating deeper mating threads and reducing stress. With smaller thread angles, boss size can sometimes be reduced.

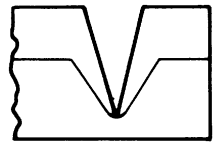

HI-LO
Dual-height thread design from ELCO Industries boosts holding power by increasing the amount of plastic captured between threads.

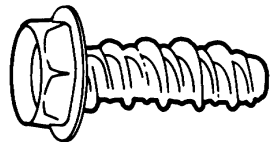

Fig. 9.02 **Special types of self-tapping screws**

This increases the material in contact with the high flat thread, increasing the axial shear area. All of this contributes to a greater resistance to pull out and a stronger fastener. This style of screw can be either thread forming or thread cutting with the thread cutting variety used on even higher modulus materials.

The third group of resins with elastic moduli in the 2800 and 6500 MPa range gain their strength from reinforcing glass fibres. Typical of resins in this category are the 13% glass-reinforced ZYTEL® nylon resin materials and MINLON® mineral-reinforced materials. These resins are best fastened with thread cutting screws. In these more rigid materials, thread cutting screws will provide high thread engagement, high clamp loads, and will not induce high residual stress that could cause product failure after insertion.

The last group of plastics, those with flexural moduli above 6500 MPa are relatively brittle and at times tend to granulate between the threads causing fastener pull out at lower than predicted force values. Resins in this higher modulus category are the 33% and 43% glass-reinforced ZYTEL® nylon resins, and RYNITE®, DuPont PET-reinforced polyester terephthalate resin.

For these materials, the finer threads of the type T screw are recommended. Even with the fine pitch screws, backing out the screw will cause most of the threads in the plastic to shear, making reuse of the same size screw impossible. If fastener removal and replacement is required in this group of materials, it is recommended that metal inserts be used, or that the boss diameter be made sufficiently larger to accommodate the next larger diameter screw (see also Fig. 3.25).

The larger screws can be used for repairs and provide greater clamp loads than the original installation. If metal inserts are chosen, there are five types available: ultrasonic, heated inserts, moulded-in, expansion, or solid bushings (Fig. 9.03).

The inserts are held in place by knurls, grooves and slots, and are designed to resist both axial and angular movement.

– *Ultrasonic Insert*

  This insert is pressed into the plastic melted by high-frequency ultrasonic vibrations and is secured by melt solidification. This is a preferred choice where applicable because of low residual stress.

– *Heated Insert*

  The insert is heated 30 to 50° C above processing melt temperature and pressed into the slightly too small hole.

– *Moulded-In Insert*

  The Insert is placed in the mould, and has an external configuration designed to reduce stress after cooling.

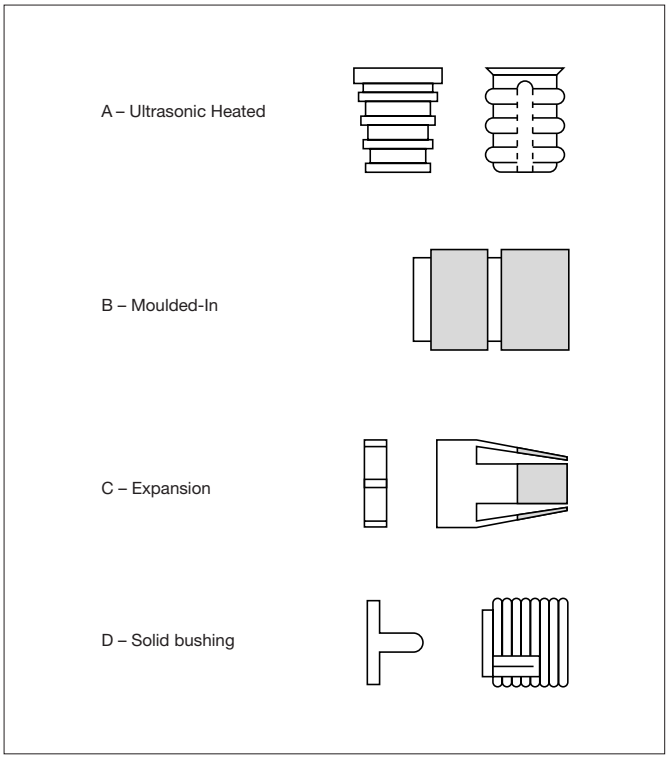

Fig. 9.03 **Types of inserts**

– *Expansion Insert*

  The expansion insert is slipped into the hole and does not lock in place until the screw is inserted to expand the insert wall.

– *Solid Bushings*

  The bushings are generally a two-piece insert. The body is screwed into a prepared hole and a ring locks the insert in place.

Recommended Design Practice

When designing for self-tapping screws in plastics, a number of factors are important: (see also fig. 3.09 for design).

– *Boss Hole Dimension*

  For the highest ratio of stripping to driving torque, use a hole diameter equal to the pitch diameter of the screw, ($d_h \cong 0{,}75\ D_s$, see Tables 9.01–9.02).

– *Boss Outside Dimension*

  The most practical boss diameter is 2,5 times the screw diameter. Too thin a boss may crack, and no acceptable increase in stripping torque is achieved with thicker bosses.

– *Effect of Screw Length*

  Stripping torque increases with increasing length of engagement and levels off when the engaged length is about 2,5 times the pitch diameter of the screw.

Theoretical Equations for Stripping Torque and Pull-Out Force for Self-Tapping Screws

Stripping torque may be calculated from:

$$T = F\,r\left(2\,f + \frac{p}{2\pi r}\right)$$

where:

T = Torque to develop pull-out force

r = Pitch radius of screw = $D_p/2$

p = thread pitch

F = Pull-out force

f = Coefficient of friction, Table 7.01

A practical tool for evaluating the manufacturing feasibility of a fastener joint is the strip-to-drive ratio, which is the ratio of stripping torque to driving torque.
For high volume production with power tools, this ratio should be about 5 to 1. With well trained operators working with consistent parts and hand tools, a 2 to 1 ratio may be acceptable. In any case, lubricants must be avoided because they drastically reduce this ratio.

* Hub fracture under the screw

Pull-Out Force

The ultimate test of a self-tapping screw is the pull-out force. It can be calculated by equation:

$$F = \tau \pi D_p L / S$$

where:

F = Pull-out force

τ = Shear stress = $\left(\frac{\sigma_t}{\sqrt{3}}\right)$

σ_t = Tensile yield stress or design stress

D_p = Pitch diameter

L = Axial length of full thread engagement

S = safety factor = 1.2 c_1 c_2

c_1 = 1.0 for special screws

c_1 = 1.5 for ordinary screws

$c_2 = 10/\varepsilon_{br}$ ($\geqslant$ 1.0)

ε_{br} = elongation at break, (%)

The above information can be verified by running prototype test on boss plaques or flat plaques moulded in the plastic selected.

Tables 9.01 and 9.02 give numerical values of the pull-out strengths, stripping torque and dimensions for Type A screws of various sizes. The nomenclature for self-threading screws is described. Engaged length *L*, is 2,5 times the screw diameter. Applications of self-tapping screws are shown in Fig. 9.41–9.43.

Metal Inserts

For the calculation of the pull-out force of metal inserts the formula for self-tapping screws can be used, but with an effective length of 0,3–0,5 L, see also Figures 9.03 a/b.

Screwed Joints

Introduction

This conventional method of holding parts together can be applied to DELRIN® and ZYTEL® or other thermoplastic materials.

It can be used for assembling parts made out of different materials and the thread can be moulded into the parts.

Basic Principles

To design a screwed joint all sharp interior corners must be eliminated. The beginning as well as the end of the thread should be rounded off in order to avoid notch effects. See Fig. 9.04 A.

Table 9.01 **Pull-out load performances for various screw dimensions and materials**

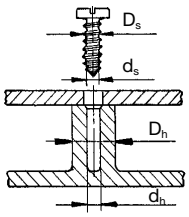

		Screw No.	6	7	8	10	12	14
		D_s mm	3,6	4	4,3	4,9	5,6	6,5
		d_s mm	2,6	2,9	3,1	3,4	4,1	4,7
		D_h mm	8,9	10	10,8	12,2	14	16,2
		d_h mm	2,9	3,3	3,5	4,1	4,7	5,5
Pull-out Force	DELRIN® 500 NC-10	N	3100	3800	4500	5250	6500	9 000
	DELRIN® 570	N	3050	3600	4250	4950	6000	8 300
	ZYTEL® E101 L NC-10	N	2250	3250	3850	4300	5100	6 400
	ZYTEL® 79G13 L	N	2200	3100	3400	3700	4400	5 900
	ZYTEL® 70G30 HSL	N	2300	3200	3500	3900	4850	6 200
	MINLON® 10B140	N	3200	3330	5370	5690	8710	10 220
	MINLON® 11C140	N	2880	3200	3540	4510	5070	6 480
	RYNITE® 530	N	3300	4100	4400	4900	*	*
	RYNITE® 545	N	4300	4470	4500	5660	6020	*
	RYNITE® 555	N	2480	2940	2740	3780	4120	*

* Hub fracture under the screw

Table 9.02 **Stripping torque performances for various screws dimensions and materials**

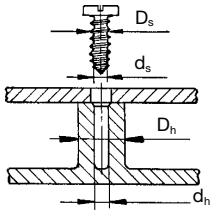

	Screw No.	6	7	8	10	12	14
	D_s mm	3,6	4	4,3	4,9	5,6	6,5
	d_s mm	2,6	2,9	3,1	3,4	4,1	4,7
	D_h mm	8,9	10	10,8	12,2	14	16,2
	d_h mm	2,9	3,3	3,5	4,1	4,7	5,5
Stripping torque	DELRIN® 500 NC-10	N.m	2,5	3,5	4,6	5,8	7,5	11,2
	DELRIN® 570	N.m	2,5	3,5	4,7	6,2	8,2	12,0
	ZYTEL® E101 L NC-10	N.m	1,6	2,5	3,6	5,0	7,0	10,0
	ZYTEL® 70G13 L	N.m	2,0	3,0	4,0	5,3	6,9	8,5
	ZYTEL® 70G30 HSL	N.m	2,5	3,5	4,8	6,3	8,0	10,0
	MINLON® 10B140	N.m	2,4	3,5	4,8	6,4	10,2	13,8
	MINLON® 11C140	N.m	2,5	3,0	4,3	6,0	7,3	11,3
	RYNITE® 530	N.m	3,3	4,3	4,6	7,2	-	-
	RYNITE® 545	N.m	4,7	5,1	5,3	8,6	10,4	11,8
	RYNITE® 555	N.m	4,3	4,7	4,2	6,0 [a)]	6,6 [a)]	9,8 [a)]

[a] For these sizes, "d_h" was increased by 10% to avoid hub fracture at the weld line.

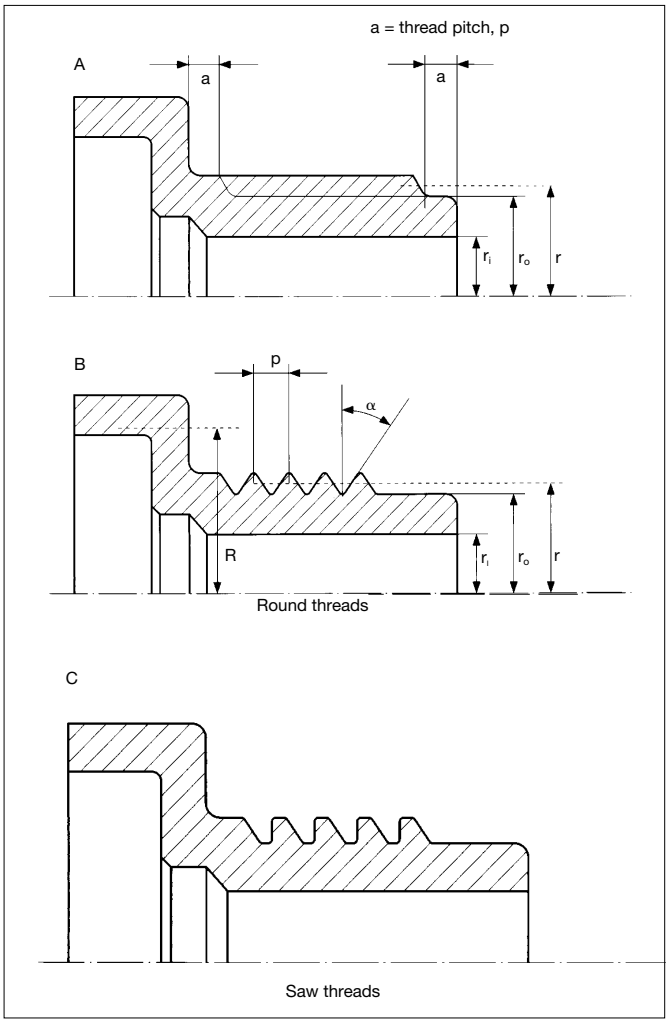

Fig. 9.04 **Plastic screws**

If both parts are made in plastic, the shape of the thread should be changed to one of the two types shown in Fig. 9.04 B-9.04 C.

Engineering plastics usually have better resistance to compressive stresses than to tensile stresses and therefore the threads should be made on the outside of the plastic part when it is to be screwed to a metallic tube, Fig. 9.05.

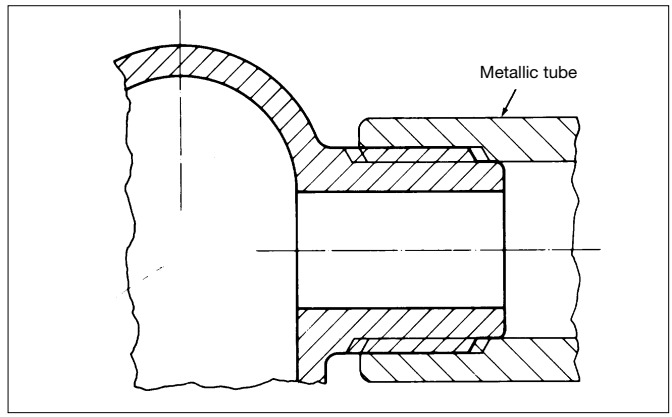

Fig. 9.05 **Preferred plastic-metal joint**

Practical Examples of Screwed Joints

For examples of plastic screws, see Figs. 9.06-9.08.

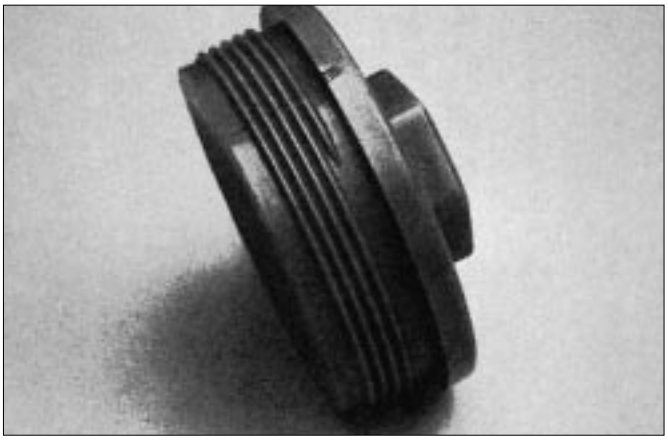

Fig. 9.06 **Plug**

Fig. 9.07 **Hose-coupling**

Fig. 9.08 **Coupling**

Design of Plastic Screws

Theoretical equations to calculate the strength of plastic screwed joints.

Torque on bolt head:

$$M_B = F\,r\left(\frac{f_1 R}{r} + \frac{f_2}{cos(\alpha)} + \frac{p}{2\pi r}\right) = F\,r\,f_a$$

where:

F = axial force in bolt [N]

R = radius of bolt head contact surface

r = pitch radius of thread, Fig. 9.04 B

f_1 = friction between bolt head and part

f_2 = friction between threads

p = thread pitch, Fig. 9.04B

α = angle of thread in radial direction, Fig. 9.04 B

Torque in thread:

$$M_T = F\,r\left(\frac{f_2}{\cos(\alpha)} + \frac{p}{2\pi r}\right) = F\,r\,f_b$$

Stresses in bolt:

axial: $\sigma_{ax} = F / A$

shear: $\tau = r\,M_T / I_p$

equivalent: $\sigma = \sqrt{\sigma^2_{ax} + 3\,\tau^2} \leq \sigma_y$

where:

$$A = \pi\,(r_o^2 - r_i^2)$$

$$I_p = \frac{\pi}{2}\,(r_o^4 - r_i^4)$$

r_o = outside radius of screw core, Fig. 9.04 A

r_i = inside radius of hollow screw; (solid: $r_i = 0$)

σ_y = tensile yield strength at design conditions

Maximum torque on bolt head:

$$M_{B,\,max} = \sigma_y \Big/ \sqrt{\left(\frac{1}{r\,f_a A}\right)^2 + 3\left(\frac{r f_b}{I_p f_a}\right)^2}$$

Shear stress in thread

Due to differences in axial stiffness of screw and “nut”, the loads on the windings of the thread on not uniformly distributed over the length of the screw. Finite element studies have shown that in the case of a plastic screw with a steel nut, the first winding will take up to 50% of the total axial load. To avoid failure of the thread, the axial load in this case should be limited to,

$$F_{ax} \leq 2\,\pi\,r\,p\,\frac{\sigma_y}{\sqrt{3}}$$

Press Fittings

Press fitting provides a simple, fast and economical means for parts assembly. Press fits can be used with similar or dissimilar materials and can eliminate screws, metal inserts, adhesives, etc. When used with dissimilar materials, differences in coefficient of linear thermal expansion can result in reduced interference due either to one material shrinkage or expanding away from the other, or the creation of thermal stresses as the temperature changes. Since plastic materials will creep or stress relieve under continued loading, loosening of the press fit, at least to some extent can be expected. Testing under expected temperature cycles is obviously indicated.

Interference Limits

The general equation for thick-walled cylinders is used to determine allowable interference between a shaft and a hub:

$$I = \frac{\sigma_d D_s}{W}\left[\frac{W+\mu_h}{E_h} + \frac{1-\mu_s}{E_s}\right] \qquad (15)$$

and

$$W = \frac{1+\left[\frac{D_s}{D_h}\right]^2}{1-\left[\frac{D_s}{D_h}\right]^2} \qquad (16)$$

Where:

- I = Diametral Interference, mm
- σ_d = Design stress, MPa
- D_h = Outside diameter of hub, mm
- D_s = Diameter of shaft, mm
- E_h = Modulus of elasticity of hub, MPa
- E_s = Elasticity of shaft, MPa
- μ_h = Poisson's ratio of hub material
- μ_s = Poisson's ratio of shaft material
- W = Geometry factor

Case 1. Shaft and Hub of same plastic.

$E_h = E_s$; $\mu_h = \mu_s$. Thus equation 15 simplifies to:

$$I = \frac{\sigma_d D_s}{W} \times \frac{W+1}{E_h}$$

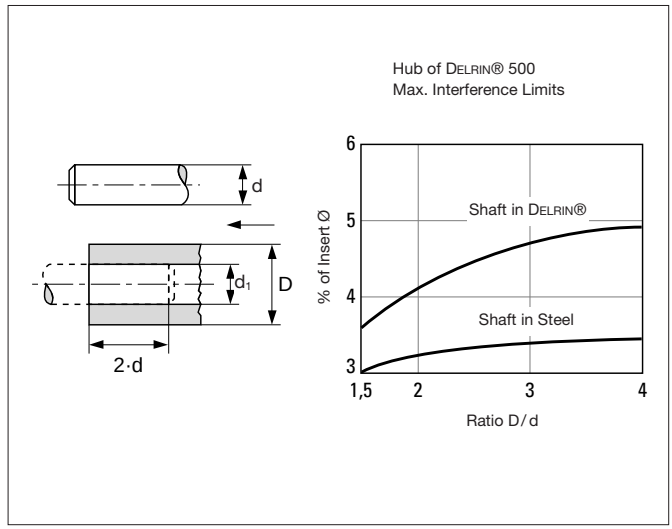

Fig. 9.09 **Maximum interference limits**

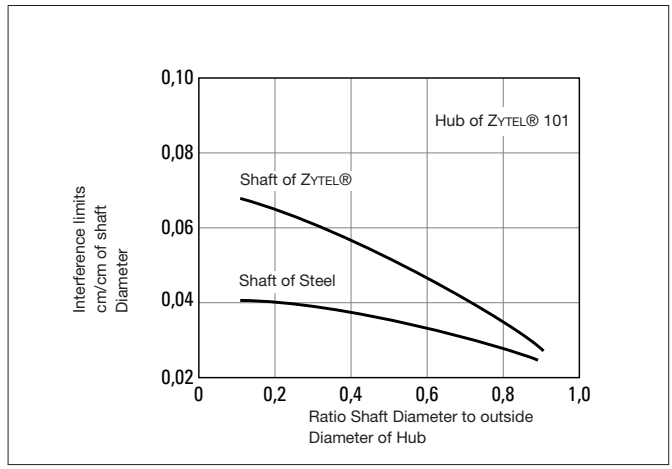

Fig. 9.10 **Theoretical interference limits for press fitting**
Based on yield point and Elastic Modulus at Room Temperature and Average Moisture Conditions

Case 2. Metal Shaft; Hub of plastic. When a shaft is of a high modulus metal or any other high modulus material, E greater than 50×10^3 MPa, the last term in equation 15 becomes negligible and the equation simplifies to:

$$I = \frac{\sigma_d D_s}{W} \times \frac{W+\mu_h}{E_h}$$

Theoretical Interference Limits for DELRIN® acetal resin and ZYTEL® nylon resin are shown in Fig. 9.09 and 9.10.

Press fitting can be facilitated by cooling the internal part or heating the external part to reduce interference just before assembly.

The change in diameter due to temperature can be determined using the coefficient of thermal expansion of the materials.

Thus:

$$D - D_o = \alpha\,(T - T_o)\,D_o$$

Where:

D = Diameter at temperature T, mm

D_o = Diameter at initial temperature T_o, mm

α = Coefficient of linear thermal expansion, (1/K).

Effects of Time on Joint Strength

As previously stated, a press-fit joint will creep and/or stress relax with time. This will reduce the joint pressure and holding power of the assembly. To counteract this, the designer should knurl or groove the parts. The plastic will then tend to flow into the groves and retain the holding power of the joint.

The results of tests with a steel shaft pressed into a sleeve of DELRIN® acetal resin are shown in Figs. 9.11-9.13. Tests were run at room temperature. Higher temperature would accelerate stress relaxation. Pull out force will vary with shaft surface finish.

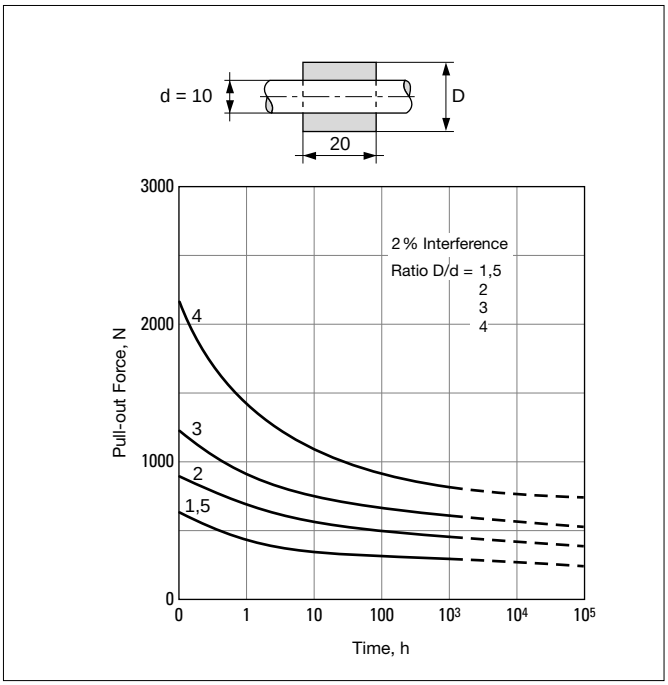

Fig. 9.11 **Time vs joint strength – 2% interference**

Assembly of Press-Fit Joints

The force required to press two parts together may be approximated by the equation:

$$F = \pi f P D_s L$$

and

$$P = \frac{\sigma_d}{W}$$

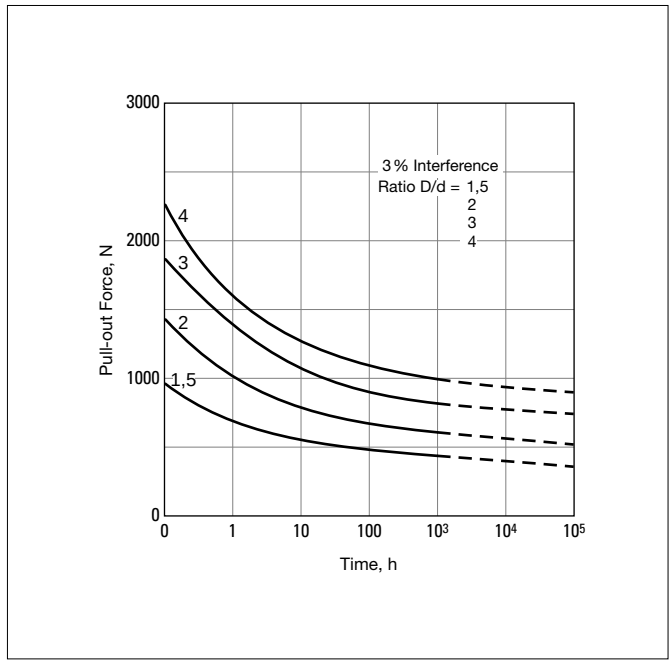

Fig. 9.12 **Time versus joint strength – 3% interference**

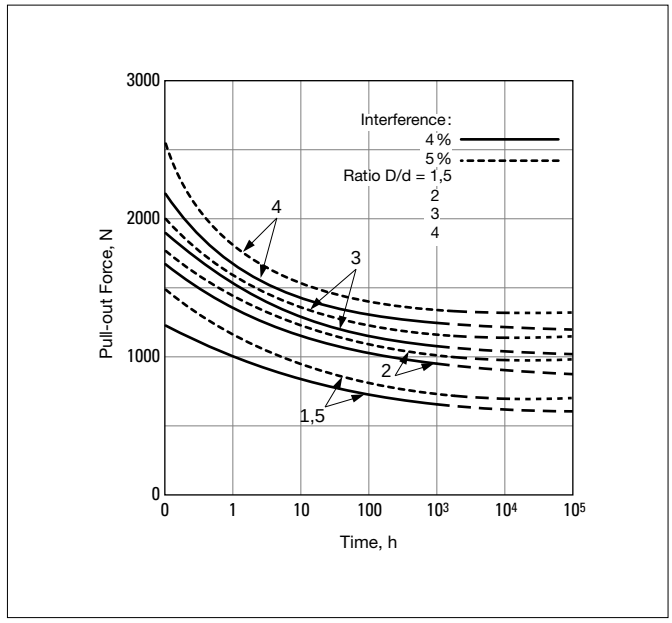

Fig. 9.13 **Time versus joint strength – 4 and 5% interference**

where:

F = Assembly force

f = Coefficient of friction

P = Joint pressure

D_s = Diameter of shaft

L = Length of press-fit surfaces

σ_d = Design stress

W = Geometry factor (Equation 16)

Coefficient of friction is dependent on many factors and varies from application to application. Coefficients from Table 7.01 may be used as approximations for rough strength calculations. When greater accuracy is required, tests on prototype parts are recommended.

Torsional Strength

The torsional strength of an interference joint is given by the equation:

$$T = F \frac{D_s}{2} \quad (N \cdot mm)$$

Examples

Examples of press fittings are shown in Fig. 9.14-9.15.

This handle for a drill-crank is assembled with the three studs going into the three hubs with an interference fit of 4%.

Ball bearings are press-fitted into the grooved pulley.

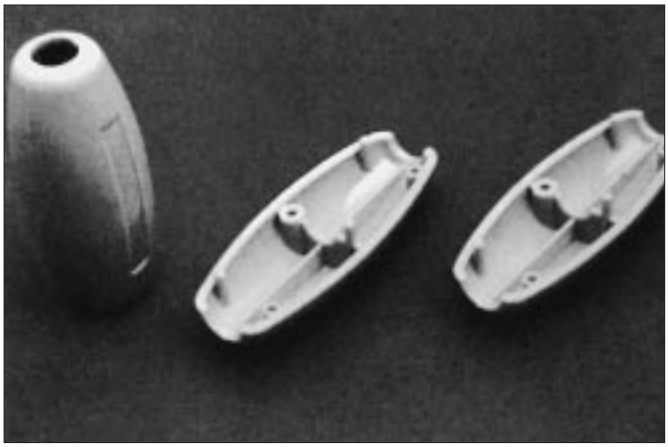

Fig. 9.14 **Drill-crank handle**

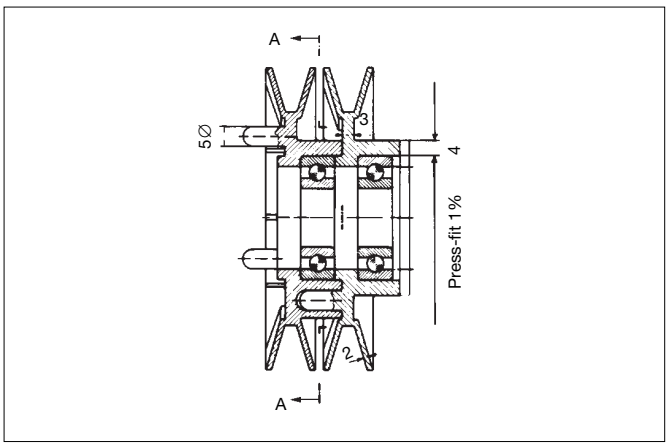

Fig. 9.15 **Ball bearing**

Snap-Fits

Introduction

The most common types of snap -fits are:

1) those with a full cylindrical undercut and mating lip (Fig. 9.16, Table 9.03),
2) those with flexible cantilevered lugs (Fig. 9.17),
3) those with spherical undercut (Fig. 9.18).

Spherical snap-fits can be seen as a special cylindrical snap-fit.

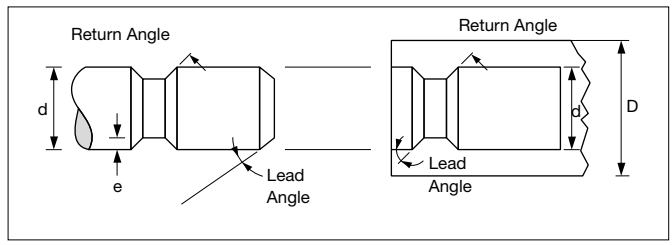

Fig. 9.16 **Cylindrical snap-fit joint**

Table 9.03 **Dimensions cylindrical snap-fit**

d	D (max., mm)		e (mm)	
mm	DELRIN®	ZYTEL® 101	DELRIN®	ZYTEL® 101
2	5		0,05	
3	8		0,07	
4	10	12	0,10–0,15	0,12
5	11	13	0,12–0,18	0,16
10	17	20	0,25–0,35	0,30
15	22	26	0,35–0,50	0,45
20	28	32	0,50–0,70	0,60
25	33	38	0,65–0,90	0,75
30	39	44	0,80–1,05	0,90
35	46	50	0,90–1,20	1,05

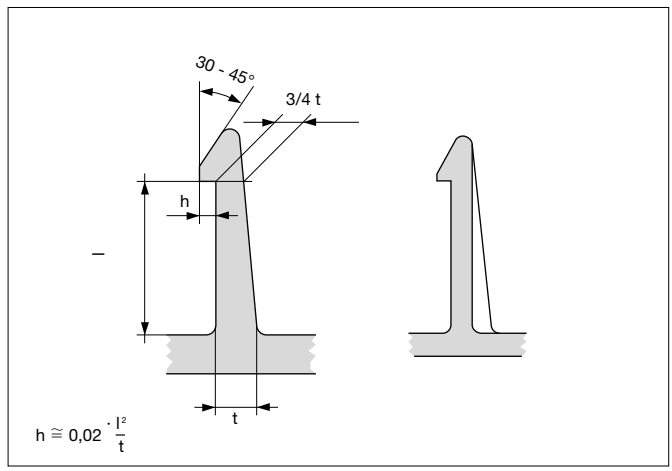

Fig. 9.17 **Snap-fit cantilevered lug**

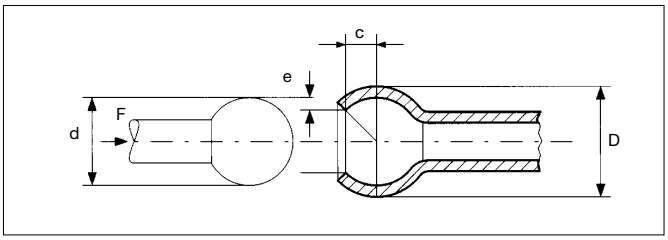

Fig. 9.18 **Spherical snap-fit**

Cylindrical snap-fits are generally stronger, but require greater assembly force than cantilevered lugs. In cylindrical snap-fits, the undercut part is ejected by snapping off a core. This requires deformation for removal from the mould. Materials with good recovery characteristics are required. For moulding complex parts, cantilevered lugs may simplify the moulding operation.

Design of Undercut Snap-Fits

In order to obtain satisfactory results, the undercut type of snap-fit design must fulfill certain requirements:

– *Uniform Wall Thickness*
  It is essential to keep the wall thickness constant throughout. There should be no stress risers.
– *Free to Move or Deflect*
  A snap-fit must be placed in an area where the undercut section can expand freely.
– *Shape*
  For this type of snap-fit, the ideal geometric shape is a circular one. The more the shape deviates from a circle, the more difficult it is to eject and assemble the part. Rectangular shaped snap-fits do not work satisfactorily.
– *Gates – Weld Lines*
  Ejection of an undercut from the mould is assisted by the fact that the resin is still at a very high temperature, thus its modulus of elasticity is lower and elongation higher. This is not the case, later, when the parts are being assembled. Often an undercut part will crack during assembly due to weak spots produced by weld lines, gate turbulence, or voids. If a weld line is a problem and cannot be avoided by changing the overall design or by moving the gate to some other location, the section at the weld line can be strengthened by means of a bead or rib.

Force to Assemble

During assembly, cylindrical snap-fit parts pass through a stressed condition due to the designed interference. The stress level can be calculated following the same procedure outlined in the previous section on press fits. With snap-fits, higher stress level and lower design safety factor is permissible due to the momentary application of stress.

The force required to assemble and disassemble snap-fit parts depends upon part geometry and coefficient of friction. This force may be divided arbitrarily into two elements: the force initially required to expand the hub, and the force needed to overcome friction.

As the beveled edges slide past each other, the maximum force for expansion occurs at the point of maximum hub expansion and is approximated by:

$$F_e = \frac{[\tan(\gamma) + f]\,\sigma_d\,\pi\,D_s L_h}{W}$$

Where:

F_e = Expansion force, N
f = Coefficient of friction (Table 7.01)
γ = Angle of beveled surface, lead angle
σ_d = Stress due to interference, MPa
D_s = Shaft diameter, mm
W = Geometry factor, eq. (16)
L_h = Length of hub expanded, mm

For the formulae for maximum diametral interference, I, see eq. (15), (pressfittings). For blind hubs, the length of hub expanded L_h may be approximately by twice the shaft diameter. Poisson's ratio can be found in the product data.

The force required to overcome friction can be approximated by:

$$F_f = \frac{\pi f\,\sigma_d D_s L_s}{W}$$

Where:

L_s = Length of interference sliding surface

Generally, the friction is less than the force for hub expansion for most assemblies. The value of [γ + *atan (f)*] should be less than 90° to be able to assemble the parts.

Examples

Suggested dimensions and interferences for snap-fitting a steel shaft into a blind hub of ZYTEL® nylon resin are given in Table 9.03. Terminology is illustrated in Fig. 9.16. A return bevel angle of 45° is satisfactory for most applications. A permanent joint can be achieved with a return angle of 90° in which case the hole in the hub must be open at the other end. It is a good practice to provide a 30° lead-in bevel on the shaft end to facilitate entry into the hub.

The toothed pulley in Fig. 9.19 is not subjected to significant axial load. A snap-fit provided with slots is, therefore, quite adequate. It allows a deeper groove and, therefore, a higher thrust bearing shoulder, which is advantageous since it is subject to wear.

Another example of press fitting is shown in the brake handle of Fig. 9.20.

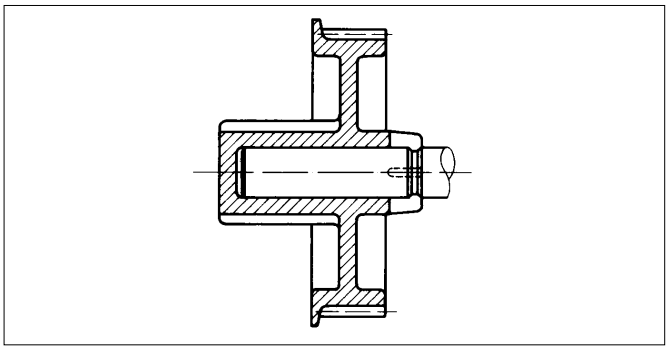

Fig. 9.19 **Tooth belt pulley**

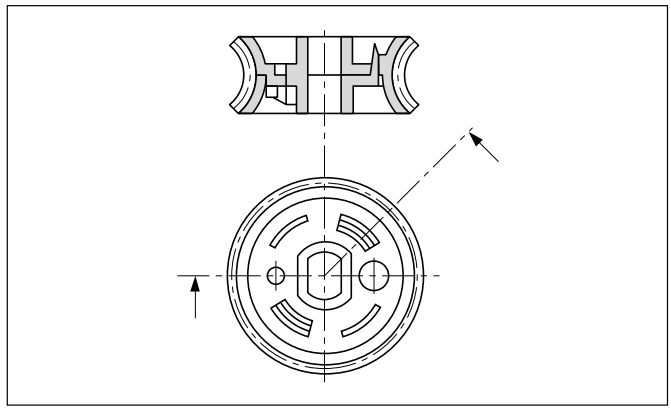

Fig. 9.21 **Snap-fit worm gear**

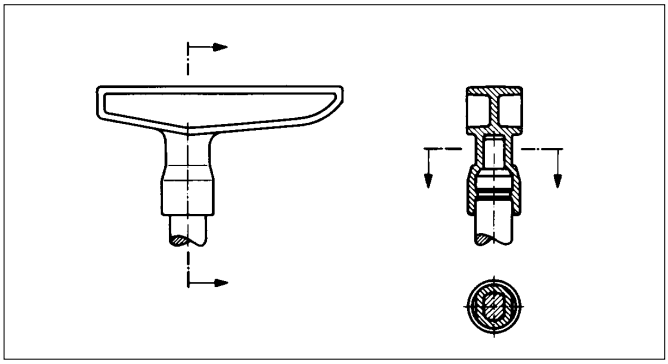

Fig. 9.20 **Brake handle**

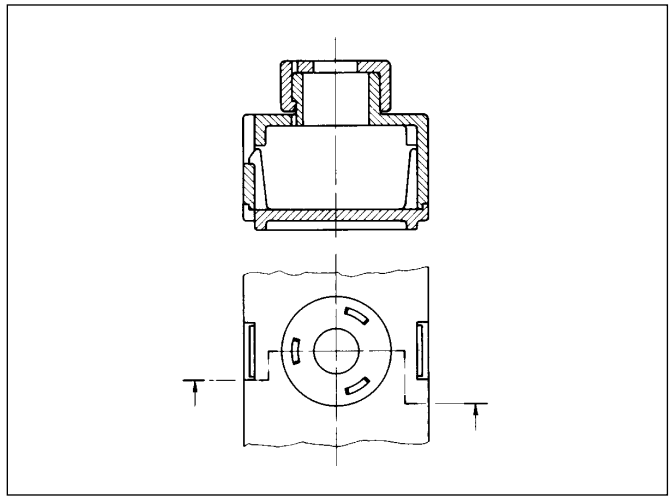

Fig. 9.22 **Micro-switch housing**

Cantilever Lug Snap-Fits

The second category into which snap-fits can be classified is based on cantilevered lugs, the retaining force of which is essentially a function of bending stiffness. They are actually special spring applications which are subjected to high bending stress during assembly.

Under working conditions, the lugs are either completely unloaded for moving parts or partially loaded in order to achieve a tight assembly. The typical characteristic of these lugs is an undercut of 90° which is always moulded by means of side cores or corresponding slots in the parts.

The split worm gear of Fig. 9.21 shows an example in which two identical parts (moulded in the same cavity) are snapped together with cantilevered lugs that also lock the part together for increased stiffness. In addition, the two halves are positioned by two studs fitting into mating holes.

The same principle is especially suitable for noncircular housings and vessels of all kinds. For example, there is the micro-switch housing in Fig. 9.22 where an undercut in the rectangular housing may not be functionally appropriate.

A similar principle is applied to the ball bearing snap-fit in Fig. 9.23. The center core is divided into six segments. On each side three undercuts are moulded and easily ejected, providing strong shoulders for the heavy thrust load.

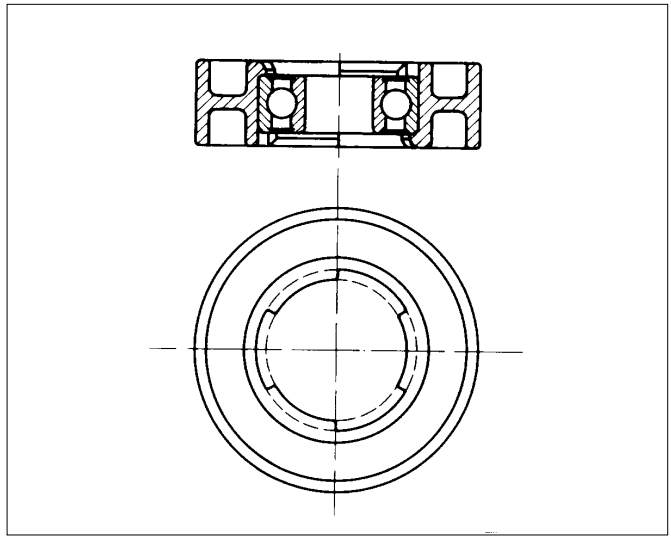

Fig. 9.23 **Snap-fit ball bearing**

Design of Cantilevered Lug Snap-Fits

Cantilevered lugs should be designed in a way so as not to exceed allowable stresses during assembly operation. This requirement is often neglected when parts in DELRIN® acetal resin are snapped into sheet metal. Too short a bending length may cause breakage (Fig. 9.24). This has been avoided in the switch in Fig. 9.25, where the flexible lugs are considerably longer and stresses lower.

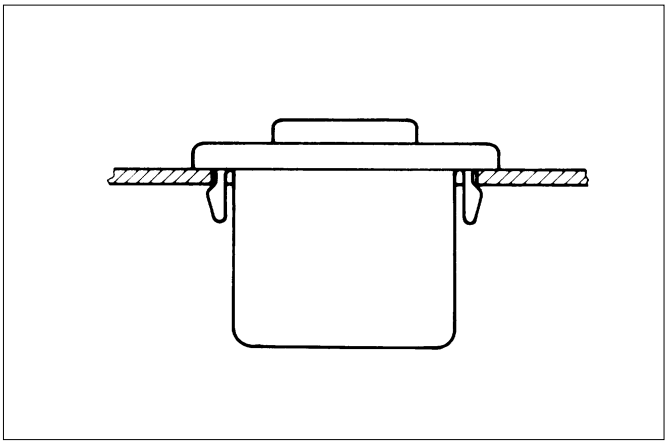

Fig. 9.24 **Undersized snap-fit lugs**

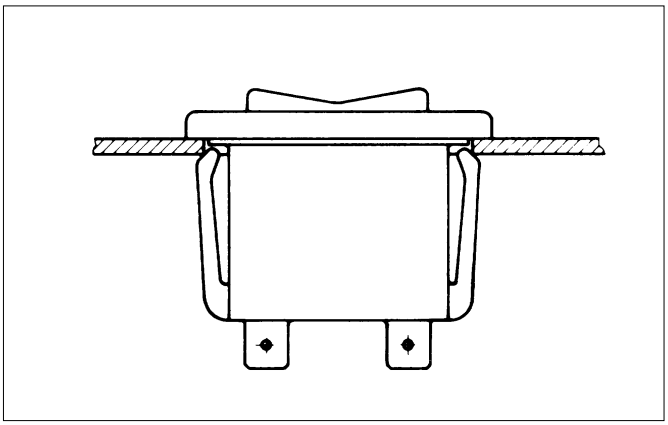

Fig. 9.25 **Properly sized snap-fit lugs**

Cantilevered snap-fit lugs should be dimensioned to develop constant stress distribution over their length. This can be achieved by providing a slightly tapered section or by adding a rib (Fig. 9.17). Special care must be taken to avoid sharp corners and other possible stress concentrations, which can cause failure during assembling.

To check the stress levels in a cantilevered lug, the beam equations can be used:

Deflection: $h = \frac{F l^3}{3\,EI}$ [min.]

Force: $F = \frac{3\,EI\,h}{l^3}$ [N]

Assembly force (per lug): $F_a = F\,(f + \tan\gamma)$ [N]

Stress: $s = C\,\frac{F l}{I}\,y$ [MPa] (elastic)

Strain: $e = \frac{100\,\sigma}{E}$ [%]

where:

F = force to deform snap-fit with interference h [N]

l = effective length of snap-fit [mm]

E = modulus of elasticity [MPa]

I = moment of inertia of mean cross section[1], Table 4.01 [mm^4]

f = coefficient of friction

γ = top angle, $[\gamma + atan\,(f)]<90$

y = distance to neutral axis on tension side, Table 4.01 [mm]

C = stress concentration factor

C = 1,0 for filleted snap-fits

C = 2,0 for poorly rounded off corners at the critical cross section

The allowable amount of strain depends on material and on the fact if the parts must be frequently assembled and disassembled.

Table 9.04 shows suggested values for allowable strains.

Table 9.04 **Suggested allowable strains (%) for lug type snap-fits**

	Allowable strain	
Material	Used once (new material)	Used frequently
DELRIN® 100	8	2–4
DELRIN® 500	6	2–3
ZYTEL® 101, dry	4	2
ZYTEL® 101, 50% RH	6	3
ZYTEL® GR, dry	0,8–1,2	0,5–0,7
ZYTEL® GR, 50% RH	1,5–2,0	1,0
RYNITE® PET GR	1	0,5
CRASTIN® PBT GR	1,2	0,6
HYTREL®	20	10

[1] If the snap-fit lug is tapered, the accuracy of the beam formulae drops. In that case a more complicated model (e.g. Finite Elements) is recommended.

Examples

For certain applications the snap-fit area can be provided with slots as shown in Fig. 9.26. This principle allows much deeper undercuts, usually at the sacrifice of retaining force. For parts which must be frequently assembled and disassembled this solution is quite convenient. For example, it is used successfully for assembling a thermostat body onto a radiator valve (Fig. 9.27). Here a metal ring is used to insure retention.

Pressure operated pneumatic and hydraulic diaphragm valves or similar pressure vessels sometimes require higher retaining forces for snap-fits.

This can be achieved by means of a positive locking undercut as shown in Fig. 9.28. A certain number of segments (usually 6 or 8) are provided with a 90° undercut, ejection of which is made possible through corresponding slots.

In the portions between the segments there are no undercuts. This design provides very strong snap-fit assemblies, the only limitation being elongation and force required during assembly. It is also conceivable to pre-heat the outer part to facilitate the assembly operation.

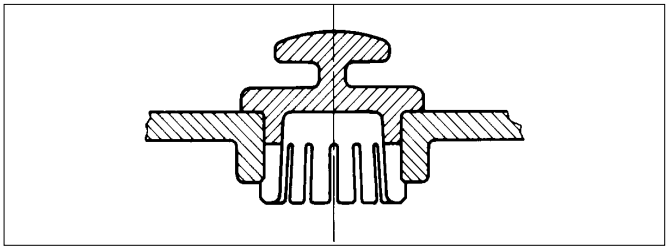

Fig. 9.26 **Slotted snap-fit**

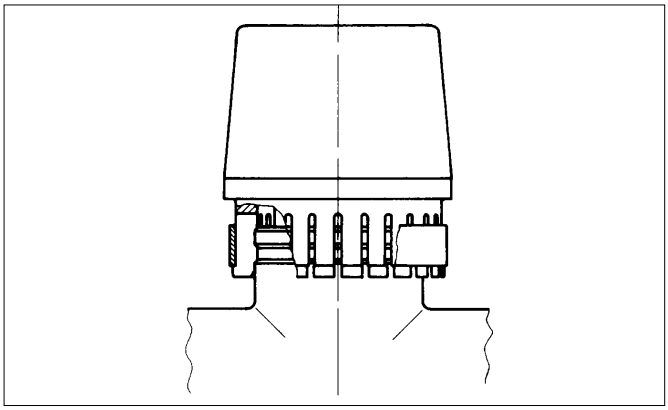

Fig. 9.27 **Snap-fit thermostat body**

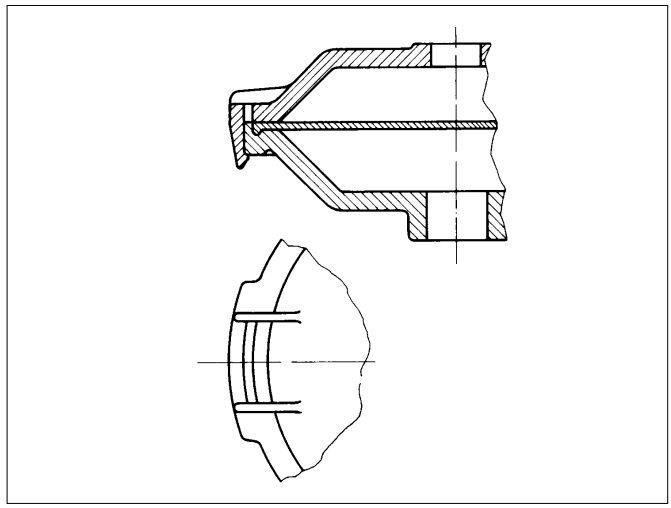

Fig. 9.28 **Snap-fitted diaphragm valve**

Hub Joints

This assembly method is generally used for parts transmitting a torque from one shaft to another by means of gears, or transmitting a mechanical movement with a cam, pump impellor or fan etc.

The connection is made generally by a key, by screws or a special shaft cross section.

In plastic, the design of such hub connections should be carefully done, fillets are very important. A lot of mistakes have been made. In order to avoid the repetition of such errors and also to avoid long explanations, a look at some practical examples of good design is suggested.

Practical Examples, see Fig. 9.29-9.35.

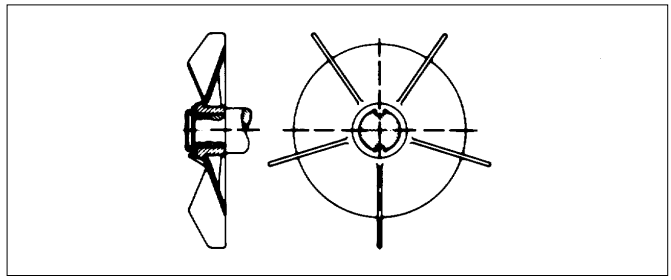

Fig. 9.29 **Fan-blower**

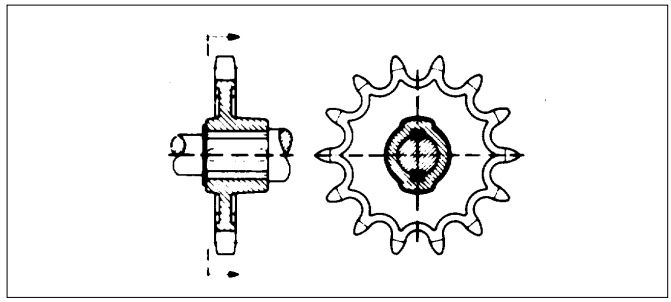

Fig. 9.30 **Chain-wheel**

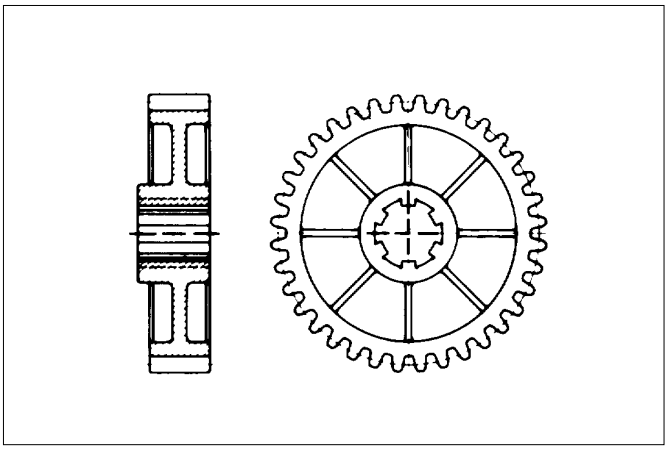

Fig. 9.31 **Gear**

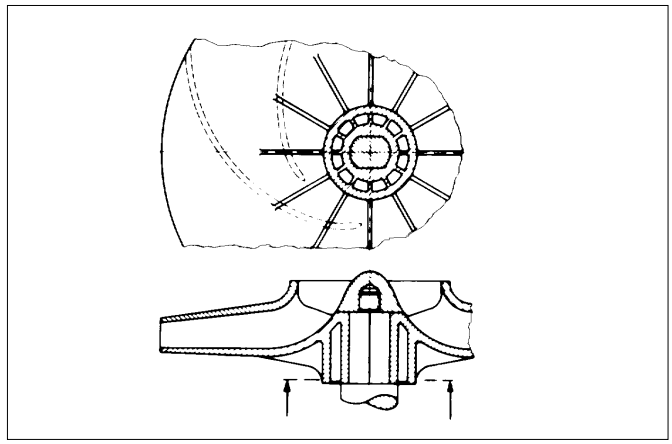

Fig. 9.34 **Outward-flow turbine**

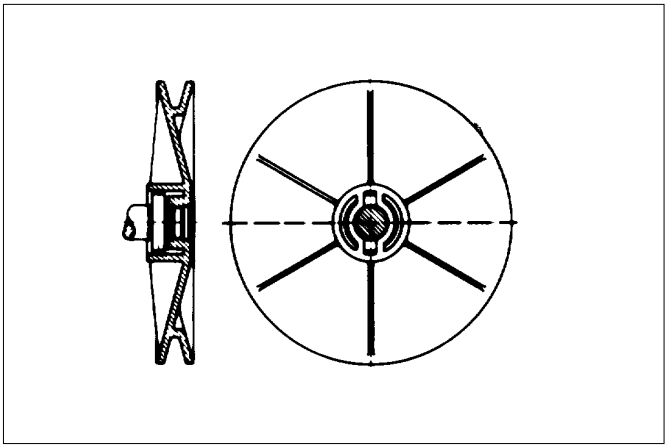

Fig. 9.32 **V belt-wheel**

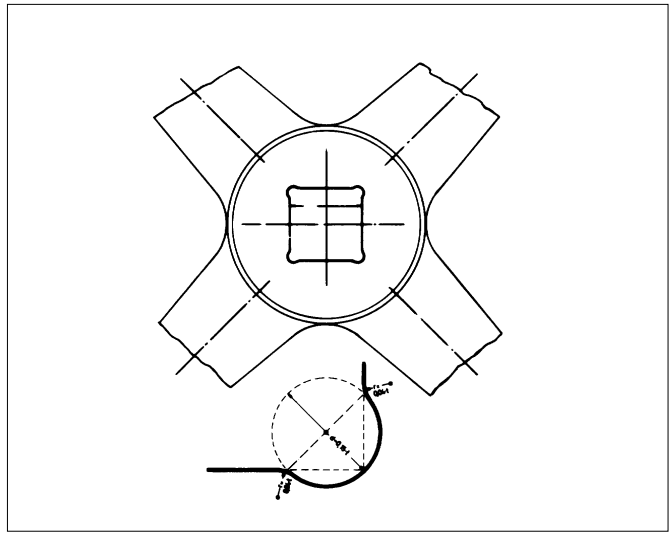

Fig. 9.35 **Suggestion for a hub connection**

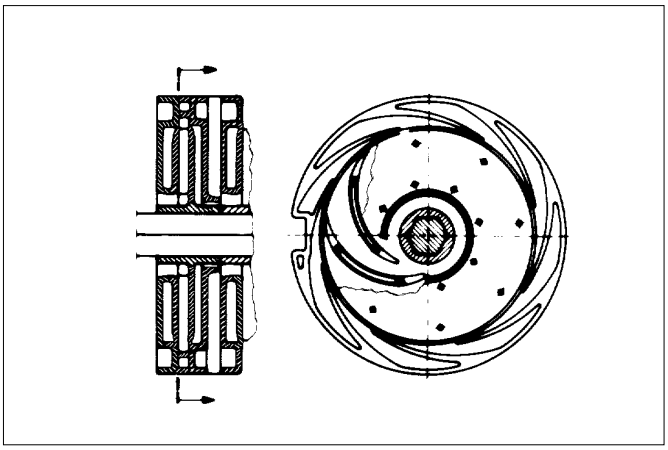

Fig. 9.33 **Centrifugal pump**

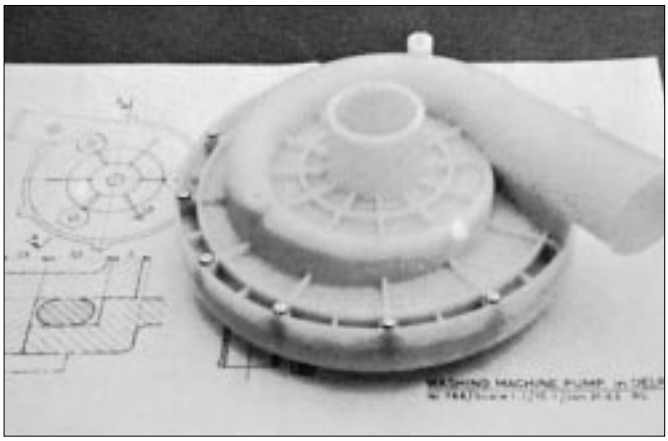

Fig. 9.41 **Washing machine pump**

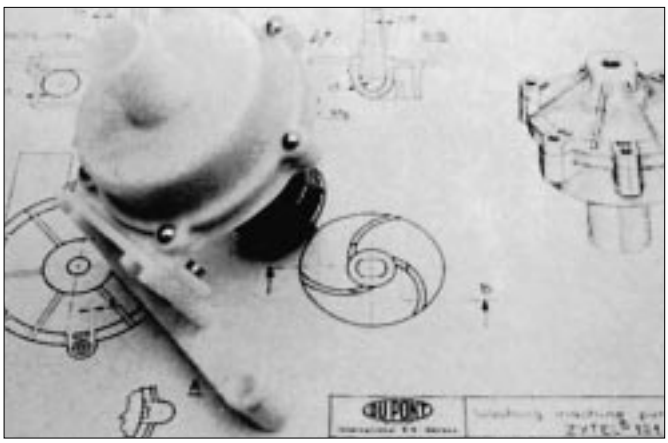

Fig. 9.42 **Washing machine pump**

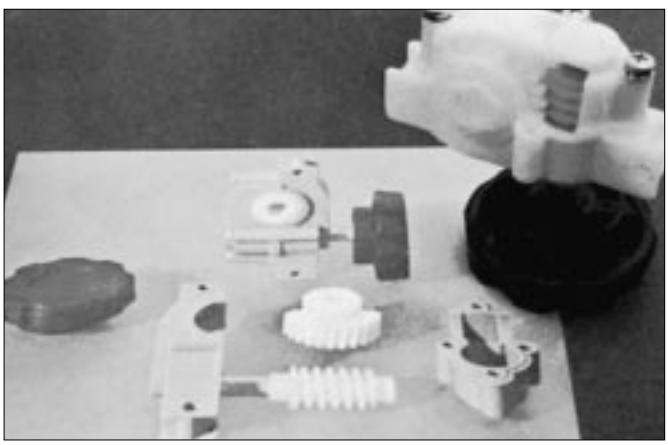

Fig. 9.43 **Window gearbox**

10 – Assembly Techniques – Category II Welding, Adhesive Bonding

Spin Welding

Introduction

Rotation welding is the ideal method for making strong and tight joints between any thermoplastic parts which have symmetry of rotation. Engineers faced with the choice of either the ultrasonic or the spinwelding process will unhesitatingly prefer the latter, in view of the following advantages which it presents:

1) The investment required for identical production is lower with spinwelding than with ultrasonics. There are no special difficulties in construction the machinery from ordinary commercial machine parts, either wholly or partly in one's own workshop.
2) The process is based on physical principles which can be universally understood and mastered. Once the tools and the welding conditions have been chosen correctly, results can be optimised merely by varying one single factor, namely the speed.
3) The cost of electrical control equipment is modest, even for fully automatic welding.
4) There is much greater freedom in the design of the parts, and no need to worry about projecting edges, studs or ribs breaking off. Moulded in metal parts cannot work loose and damage any pre-assembled mechanical elements. Nor is it essential for the distribution of mass in the parts to be symmetrical or uniform, as is the case with ultrasonic welding.

If the relative position of the two components matters, then an ultrasonic or vibration welding process must be used.

But, in practice, there are often cases in which this is essential only because the component has been badly designed. Parts should, as far as possible, be designed in such a way that positioning of the two components relative to each other is unnecessary.

Basic Principles

In spinwelding, as the name implies, the heat required for welding is produced by a rotating motion, simultaneously combined with pressure, and therefore the process is suitable only for circular parts. It is of course immaterial which of the two halves is held fixed and which is rotated. If the components are of different lengths, it is better to rotate the shorter one, to keep down the length of the moving masses.

In making a selection from the methods and equipment described in detail below, the decisive factors are the geometry of the components, the anticipated output, and the possible amount of capital investment.

Because of the relatively small number of mechanical components needed, the equipment can sometimes be constructed by the user himself. In this way, serious defects in the welding process can often be pinpointed, some examples of which will be described later.

Practical Methods

The most commonly used methods can be divided roughly into two groups as follows:

Pivot Welding

During welding the device holding the rotating part is engaged with the driving shaft, the two parts being at the same time pressed together. After completion of the welding cycle, the rotating jig is disengaged from the shaft, but the pressure is kept up for a short time, depending on the type of plastic.

Inertia Welding

The energy required for welding is first stored up in a flywheel, which is accelerated up to the required speed; this flywheel also carries the jig and one of the plastic parts. Then the parts are forced together under high pressure, at which point the kinetic energy of the flywheel is converted into heat by friction, and it comes to a stop. In practice this method has proved the more suitable one, and will therefore be described in more detail.

Pivot Welding

Pivot Welding on a Lathe

Easily the simplest, but also the most cumbersome welding method in this group, pivot welding can be carried out on any suitable sized lathe. Fig. 10.01 illustrates the set-up.

One of the parts to be welded, *a*, is clamped by *b*, which may be an ordinary chuck, a self-locking chuck, a compressed air device, or any other suitable device, so long as it grips the part firmly, centres and drives it.

The spring-loaded counterpoint *c* in the tailstock must be capable of applying the required pressure, and should be able to recoil 5-10 mm. The cross-slide *d* should also, if possible, be equipped with a lever. The plastic part *a1* should have some sort of projecting rib, edge, etc., so that the stop *e* can prevent it from rotating.

The actual welding will then proceed as follows:

a) The part *a* is fixed into the clamp, and then its companion-piece *a1* is placed in position, where it is kept under pressure by the spring-loaded point.

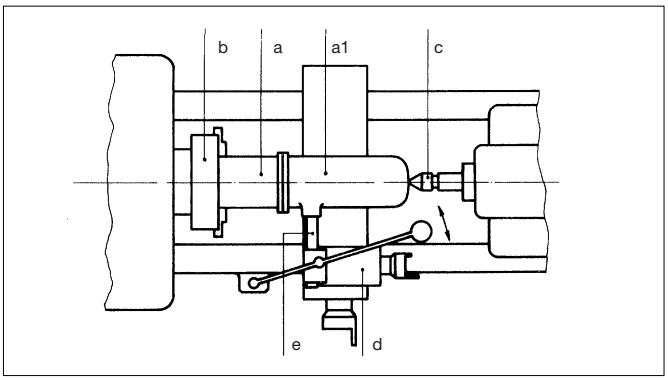

Fig. 10.01 **Pivot Welding on a Lathe**

b) The cross-slide *d* travels forward, so that the stop *e* is brought below one of the projections on *a1*.

c) The spindle is engaged or the motor switched on.

d) At the end of the welding period, the cross-slide moves back again to relase the part *a1*, which immediately begins to rotate.

e) The motor is switched off (or the spindle disengaged).

f) Pressure must be kept up by means of the spring-loaded point for a short time, the duration of which will depend on the solidification properties of the particular plastic, before the parts can be taken out.

This sequence is often made simpler by not removing the stop *e* at the end of the welding cycle, but by merely disengaging or switching off. Since, however, the moving masses in the machine are generally fairly considerable, they will not decelerate fast enough, and the weld surfaces will be subjected to shear stresses during solidification, often resulting in either low-strength or leaking joints.

In general, the narrower the melting temperature range of the plastic, the more quickly does the relative velocity of the two parts have to be reduced to zero; in other words, either the fixed partner must be rapidly accelerated, or else the rotating partner must be quickly stopped.

Using a lathe for spinwelding is not really a production method, but it can be used sometimes for prototypes or pre-production runs. It is, however, a very good way of welding caps and threated nipples onto the end of long tubes. For this purpose the tailstock is replaced by a spring-loaded jig which grips the tube and at the same time exerts pressure on it; although the lathe needs to be fitted with a clutch and a quick-acting brake, because a long tube cannot be released and allowed to spin.

Pivot Welding on Drilling Machines

Components up to 60 mm in diameter can very easily be welded on table-type drilling machines with special-purpose tools. This is the most suitable method for pre-production runs, hand-machined prototypes, or repair jobs. The process can be made fully automatic, but this is not sufficiently economical to be worthwhile. Some practice is needed to obtain uniform welds, because the welding times and pressures are influenced by the human factor.

The tool shown in Fig. 10.02 has an interchangeable tooth crown a whose diameter must match that of the plastic part. With a set of three or four such crowns it is possible to weld parts ranging from about 12 to 60 mm in diameter.

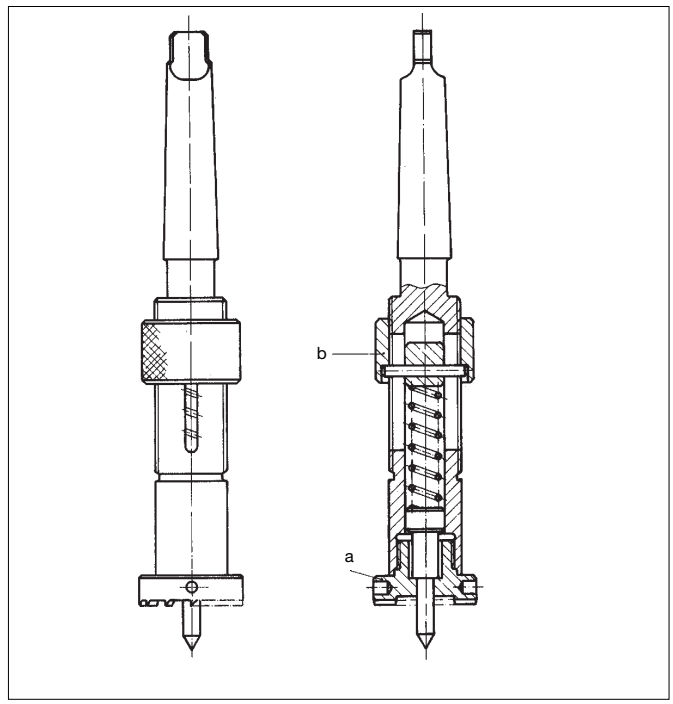

Fig. 10.02 **Pivot Welding on Drilling Machines**

The pressure of the point can be adjusted, by the knurled nut b, to suit the joint surface. The tightness and strength of the weld will depend on the pressure, and the correct pressure must be determined by experiment.

To make a weld, the drill spindle is lowered slowly until the tooth crown is still a few millimeters above the plastic part (Fig. 10.03 a). Contact should then be made sharply, to prevent the teeth from shaving off the material, and so that the part starts rotating immediately. In the form shown in Fig. 10.03 b, the pressure should be kept as constant as possible until a uniform flash appears. Then the tooth crown is pulled up as sharply as possible (Fig. 10.03 c) until the teeth disengage, but with the point still pressed against the part until the plastic has hardened sufficiently.

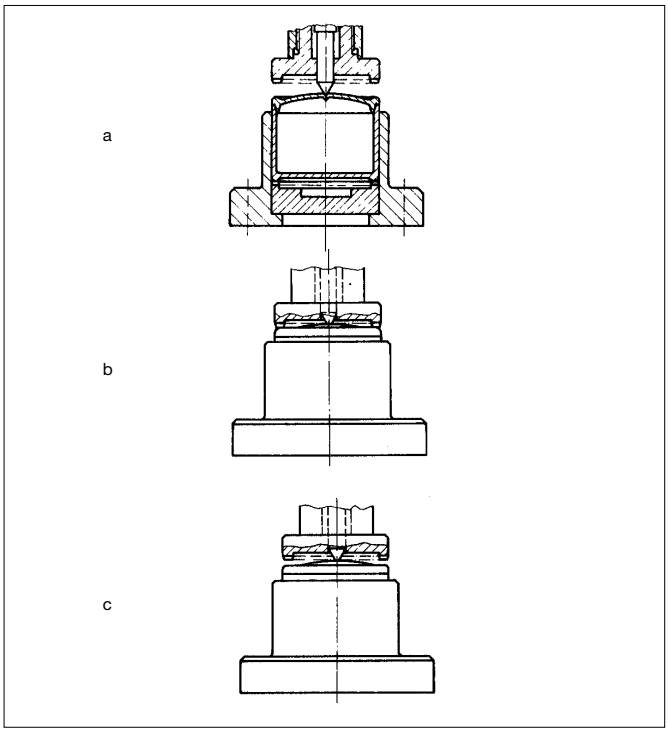

Fig. 10.03 **Drill spindle positions**

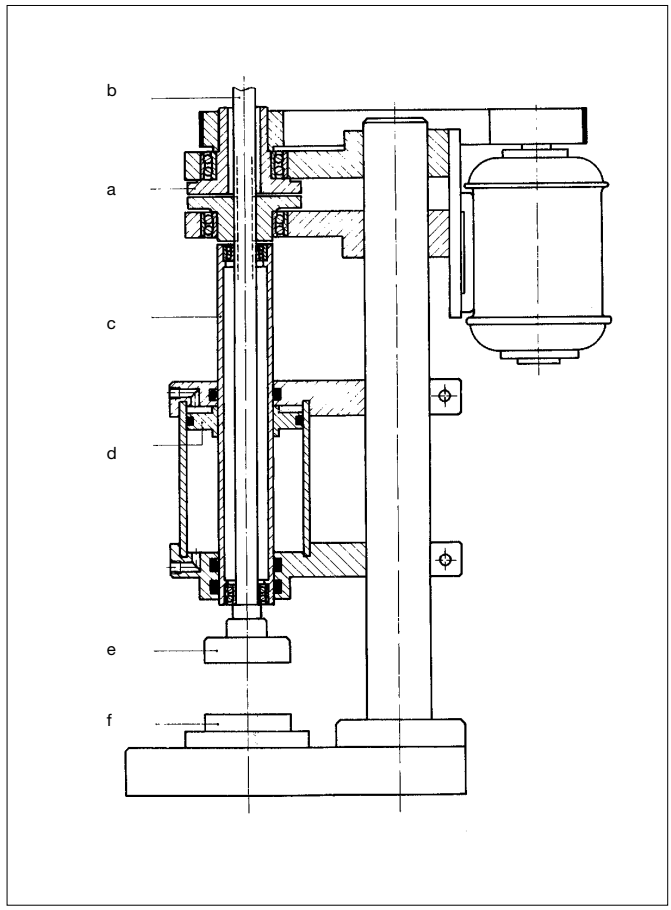

Fig. 10.04 **Pivot Welding on Special Machines**

The function of the point, therefore, is merely to apply the appropriate pressure. All the same, the plastic parts should be provided with a centering recess to guide the tool and to obtain uniform vibrationless rotation.

For a good weld a certain amount of heat is needed, which will depend on the plastic in question; it is a product of the pressure, the speed and the cycle time. At the same time, the product of pressure times speed must not be below a certain minimum value, or else the joint faces will only wear without reaching the melting point. The coefficient of friction is important too. Clearly all these factors vary from one plastic to another, and must be determined for each case. (For the shape and arrangement of the driving teeth, see Chapter 7).

As a first approximation, the peripheral welding speed for DELRIN® and ZYTEL® should be chosen between 3 and 5 m/sec. Then the pressure must be adjusted until thedesired result is obtained in a welding time of 2 to 3 seconds.

For good results, a correct weld profile is of course essential. For suggestions and dimensions, see Chapter 8.

Pivot Welding on Specially Designed Machines

To make the method we have just described fully automatic involves a certain amount of machine investment, so that it is now very rarely used in large-scale production. But special machines, based on an adaptation of this method, have been built which are much easier to operate (Fig. 10.04).

The machine has an electromagnetic clutch *a*, which makes it very easy to engage and disengage the working spindle *b*, which rotates in a tube *c* which also carries the air-piston *d*. The head *e* can take either a tooth crown or one of the other jigs described in a later section, depending on the particular plastic component to be welded.

The welding procedure is as follows:

- Both parts are inserted into the bottom holder *f*.
- The piston (operated by compressed air) and its working spindle are lowered.
- The clutch engages, causing the top plastic part to rotate.
- After a certain period (controlled by a timer) the clutch disengages, but pressure continues to be applied for a further period (depending on the type of plastic).
- The spindle is raised and the welded article ejected (or the turntable switched to the next position).

In suitable cases, a tooth crown may be employed to grip the part (Fig. 10.16). Alternatively, projections on the part such as ribs, pins, etc., can be employed for driving, because the spindle is not engaged until after the part has been gripped.

Fig. 10.05 shows an example of a part with four ribs gripped by claws. Thin-walled parts need a bead *a* to ensure even pressure around the entire weld circumference. The claws do not, in fact, apply any pressure, but transmit the welding torque.

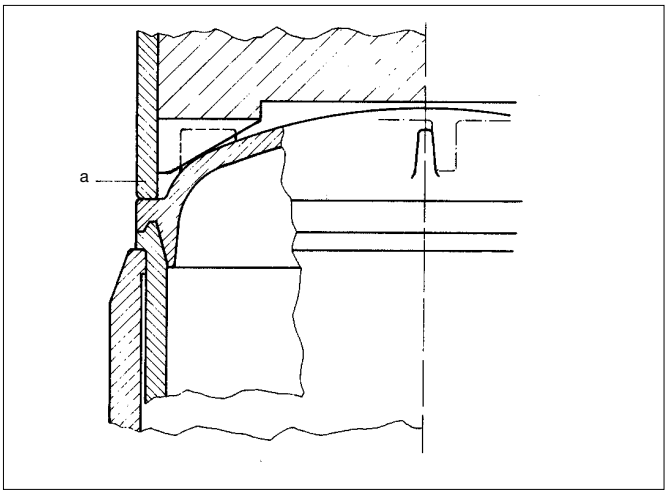

Fig. 10.05 **Drill spindle with claws**

It is sometimes not possible to use this method. For instance, the cap with a tube at the side, shown in Fig. 10.06, must be fitted by hand into the top jig before the spindle is lowered. This process cannot of course easily be made automatic.

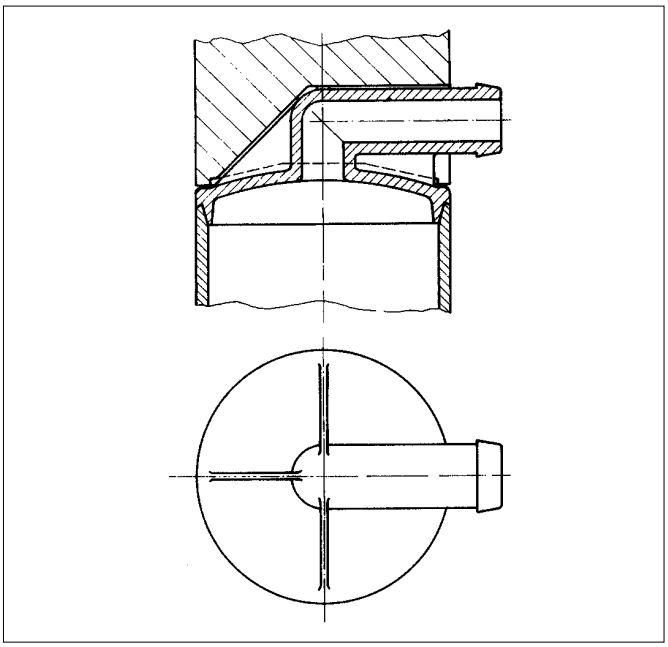

Fig. 10.06 **Special drill spindle**

Another possibility is for the spindle to be kept stationary, as shown in Fig. 10.07, and for the bottom jig to be placed on top of the compressed-air cylinder.

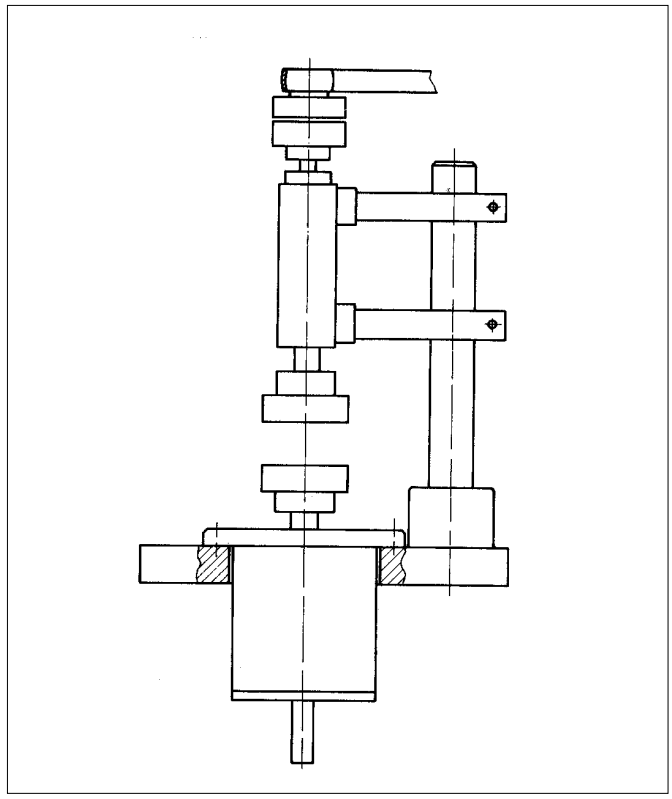

Fig. 10.07 **Pivot Welding with Stationary Spindle**

This simplifies the mechanical construction, but it is impossible to fit a turntable and thus automate the process.

One of the disadvantages of the methods described, compared to inertia machines, is that more powerful motors are required, especially for large diameters and joint areas.

Inertia Welding

By far the simplest method of spinwelding, and the most widespread, is the inertia method. This requires minimum mechanical and electrical equipment, whilst producing reliable and uniform welds.

The basic principle is that a rotating mass is brought up to the proper speed and then released. The spindle is then lowered to press the plastic parts together, and all the kinetic energy contained in the mass is converted into heat by friction at the weld face.

The simplest practical application of this method involves specially built tools which can be fitted into ordinary bench drills. Fig. 10.08 shows a typical arrangement. The mass *a* can rotate freely on the shaft *b*, which drives it only through the friction of the ball bearings and the grease packing. As soon as the speed of the mass has reached that of the spindle, the latter is forced down and the tooth crown *c* grips the top plastic part *d* and makes it rotate too. The high specific pressure on the weld interfaces acts as a brake on the mass and quickly brings the temperature of the plastic up to melting point.

Once again, pressure must be kept on for a short period, depending on the particular type of plastic.

The tool illustrated in Fig. 10.08 has no mechanical coupling, so that a certain period of time (which depends on the moment of inertia and the speed of the spindle) mustelapse before the mass has attained the necessary speed for the next welding operation, and with larger tools or an automatic machine this would be too long. Moreover, there is a danger – especially when operating by hand – that the next welding cycle will be commenced before the mass has quite reached its proper speed, resulting in a poor quality weld. The tool shown in Fig. 10.08 should therefore only be used for parts below a certain size (60-80 mm in diameter).

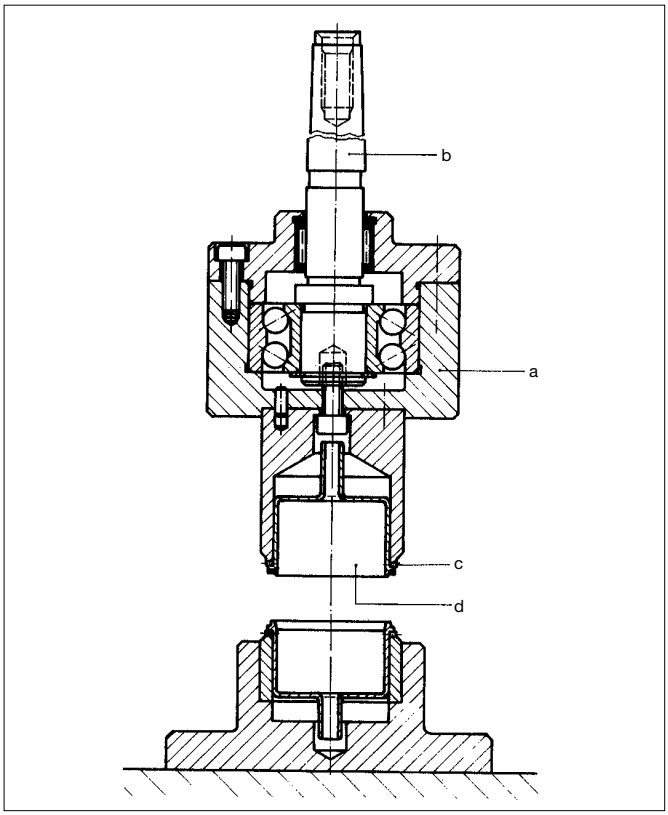

Fig. 10.08 **Inertia Welding using ordinary bench drills**

Since small components can also be welded with fly-wheels if high speeds are used, very small tools (30-50 mm in diameter) are sometimes constructed which will fit straight into the drill chuck. Fig. 10.09 shows such an arrangement, for welding plugs. Since speeds as high as 8000 to 10 000 rpm are needed, a pivot tool like that in Fig. 10.02 is sometimes preferred.

For tools with diameters over 60-80 mm, or where a rapid welding cycle is required, a mechanical coupling like in Fig. 10.10 is best. Here the mass *a* can move up and down the shaft *b*. When idling, the springs *c* force the mass down so that it engages with the shaft via the cone coupling *d*. The mass then takes only an instant to get up to its working speed.

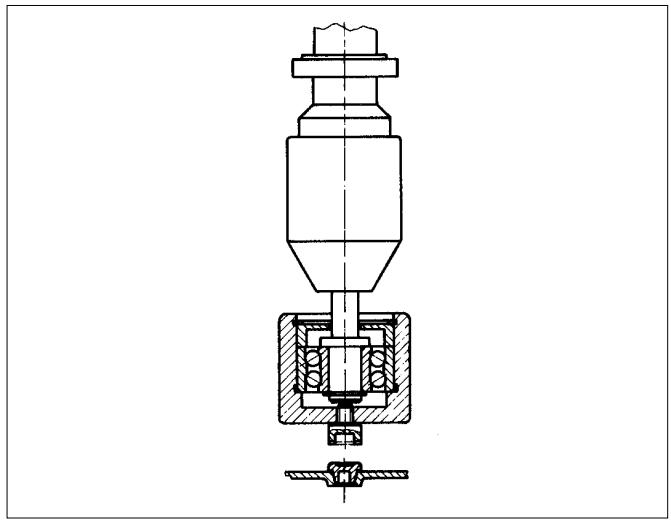

Fig. 10.09 **Inertia Welding for small components**

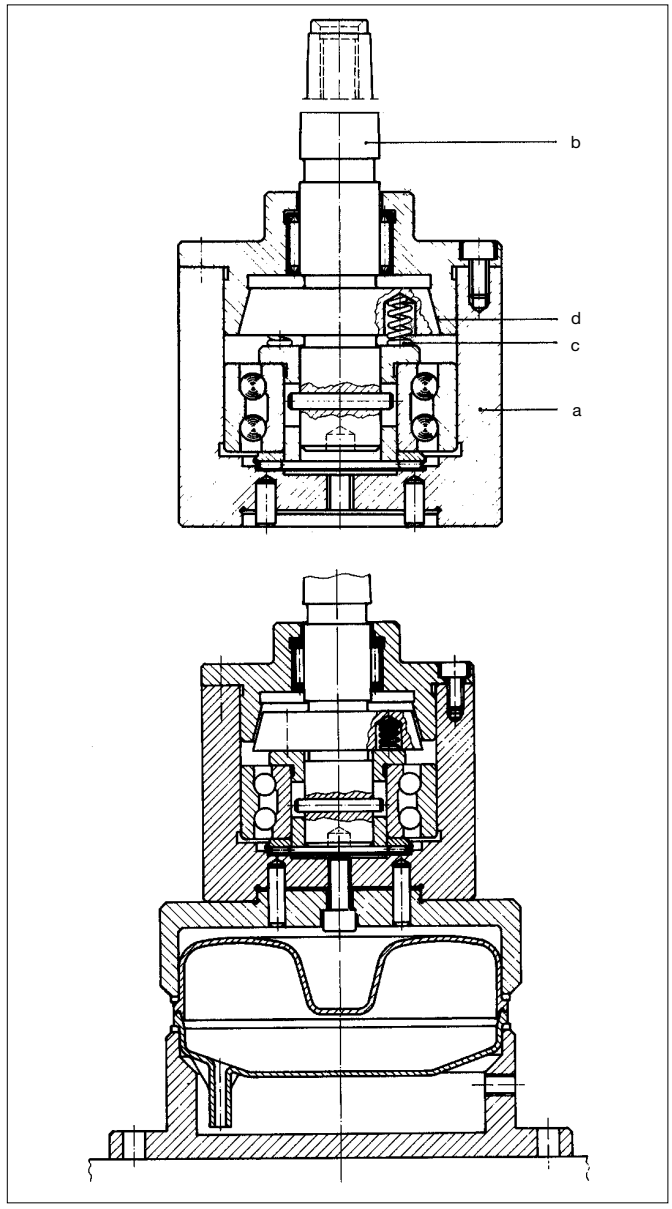

Fig. 10.10 **Inertia Welding, Mechanical Coupling**

As soon as the spindle is lowered and the tooth crown grips the plastic, the mass moves upwards and disengages (Fig. 10.10a). But since the pressure of the spindle is not fully transmitted until the coupling reaches the end of its stroke, there will be a delay in gripping the part, with the result that the teeth tend to shave off the plastic, especially when the spindle does not descend fast enough.

A lined flat clutch (as shown in Fig. 10.13) can of course be used instead of a hardened ground cone clutch.

The following rules must be observed when using inertia tools in drilling machines:

1) The spindle must be lowered sharply. The usual commercial pneumatic-hydraulic units fitted to drilling machines are too slow.
2) The pressure must be high enough to bring the tool to rest after 1-2 revolutions. This is particularly important with crystalline plastics with a very sharply defined melting point. (See general welding conditions.)
3) Inertia tools must be perfectly round and rotate completely without vibration. If they have a Morse cone, this must be secured against loosening. It is best to use a Morse cone having an internal screw thread within anchoring bolt (hollow spindle). *Fatal accidents can result from the flywheel coming loose or the shaft breaking.*
4) The downwards movement of the spindle must be limited by a mechanical stop, so that the two jigs can never come into contact when they are not carrying plastic parts.

Although uniformly strong welds can be made when operating these drilling machines by hand, the use of compressed air is firmly recommended even for short production runs. Such a conversion is most easily done by adding a rack and pinion as shown in Fig. 10.11.

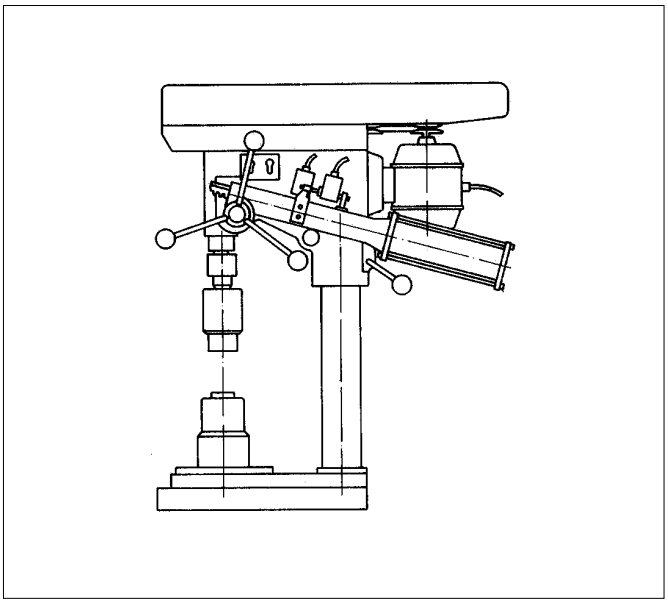

Fig. 10.11 **Inertia Welding, Rack and Pinion Conversion**

Moreover, it is advisable to have a machine with variable-speed control, so as to be able to get good results with no need to modify the mass. It is only worthwhile converting a drilling machine if this is already available; if starting from scratch, it is better to buy a machine specially designed for spinwelding.

Machines for Inertia Welding

The principle of the inertia welding machine is so simple that it is possible to build one with very little investment.

If the machine is mainly used for joining one particular pair of components, it will not generally require to have facilities for varying the speed. If this should prove necessary, it can be done by changing the belt pulley.

Except for the welding head, the machine shown in Fig. 10.12 is entirely built from commercially available parts. It consists basically of the compressed air cylinder *a*, which supports the piston rod at both ends and also the control valve *b*. The bottom end of the piston rod carries the welding head *c* (see Fig. 10.13), driven by the motor *d* via the flat belt *e*. The machine also incorporates a compressed air unit *f* with reducing valve, filter and lubricating equipment.

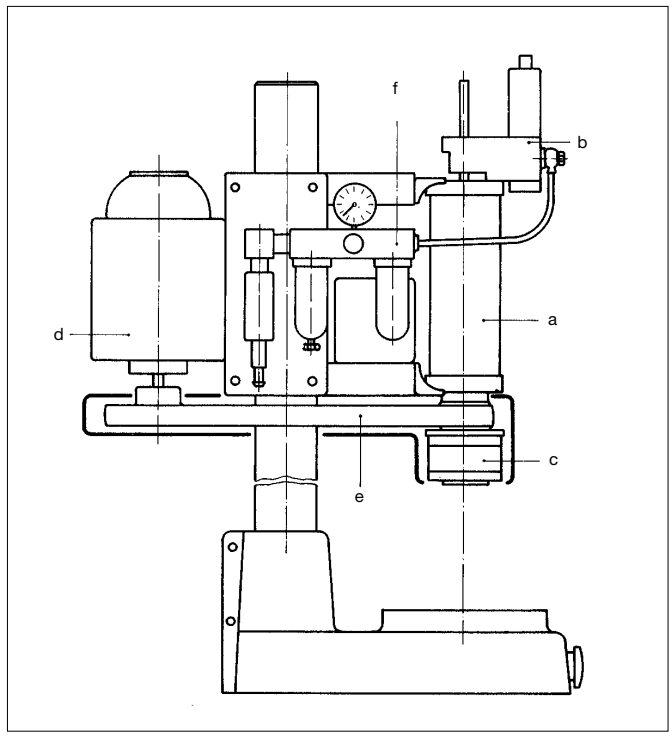

Fig. 10.12 **Inertia Welding Machine**

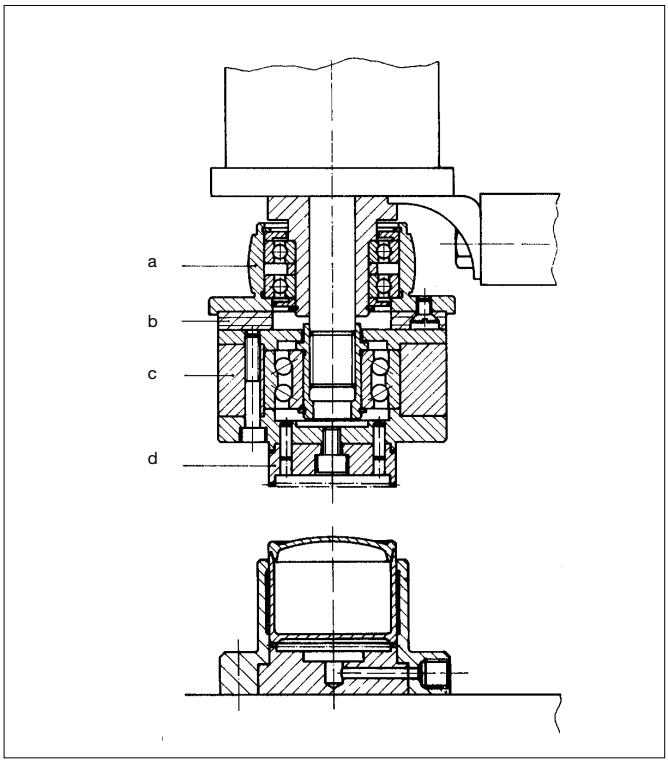

Fig. 10.13 **Inertia Welding Machine Head**

The welding head shown in Fig. 10.13 (designed by DuPont) consists of a continuously rotating belt pulley *a*, which carries the coupling lining *b*. In the drawing, the piston rod is at the top of its stroke and the movement of rotation is transmitted via the coupling to the flywheel *c*.

As the spindle descends, the coupling disengages and the tooth crown grips the top of the float, shown as an example.

If it is impossible to grip the part with a tooth crown, and it has to be fitted into the top jig by hand (as in Fig. 10.06, for example), an extra control will be necessary. The piston will have to pause on the upstroke just before the coupling engages, to enable the parts to be inserted. This can be managed in various ways. For example, one can buy compressed air cylinders fitted with such a device. A pulse passes from the travelling piston directly to a Reed switch on the outside.

So that the parts may be taken out conveniently, the piston stroke must generally be about 1,2 times the length of the entire finished welded part. Long parts require considerable piston strokes, which is impractical and expensive. Fig. 10.14 shows a typical example – a fire-extinguisher – for which a piston stroke 1,2 times the length of the part would normally have been needed.

However, there are various ways of circumventing this:

1) The bottom holder *a*, can be fitted with a device for clamping and centering, so that it can easily be released by hand and taken out sideways.
2) Two holders are fitted, *a* and *b*, which can swivel through 180° about the axis X-X by means of a turntable *c*. The completed article is removed and changed while the next one is being welded; this reduces the total welding cycle.
3) If the production run justifies it, a turntable can of course be used; it may, for instance, have three positions: welding, removal and insertion.

The above steps allow the piston stroke to be shortened considerably, thus avoiding the potentially lethal arrangement of having the rotating mass on a piston rod which projects too far.

Since the welding pressure is fairly high, the clutch lining and the ball-bearings of the pulley will be under an unnecessarily heavy load when in the top position. It is therefore advisable to operate at two different pressures, although this does involve a more complicated pneumatic control. Alternatively, a spiral spring can be incorporated above the piston, to take up some of the pressure at the top of its stroke.

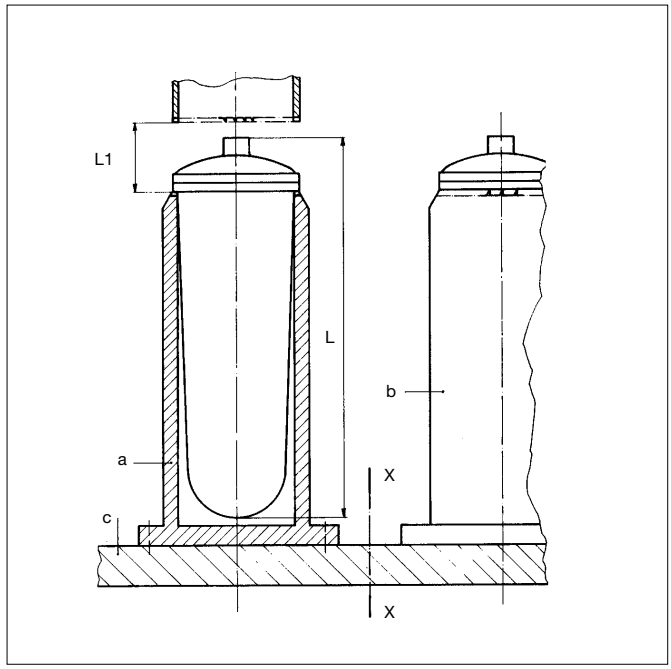

Fig. 10.14 **Inertia Welding, long parts**

In any case, the speed of the piston must be reduced sharply just before contact is made, so as to reduce the initial acceleration of the flywheel and protect the clutch lining.

On machines equipped with a turntable the parts are ejected after being removed from under the spindle. In such cases, the piston stroke can be much shorter, as, for example, with the float shown in Fig. 10.13.

It is also possible to produce the pressure by means of the diaphragm device shown in Fig. 10.15. The rubber diaphragm is under pressure from compressed air above it and from a spring below. The spring must be strong enough to raise the flywheel and to apply sufficient force to engage the clutch. In a production unit it is best to guide the shaft by means of axial ball-bearings. The advantages of this device over an ordinary cylinder are lower friction losses and a longer life. However, the permissible specific pressures on the diaphragm are limited, so that larger diameters are needed to achieve predetermined welding pressures. (The welding head, with flywheel and belt pulley, is identical with that shown in Fig. 10.13).

The rubber diaphragm mechanism is suitable for a piston strocke up to 10-15 mm and for specific pressures of 3 to 4 bar.

Since, as has already been mentioned, the operating speed can be altered by changing the motor belt pulley, a variable speed motor is not essential. In any production run there will be cases in which some possibility of limited speed adjustment would seem to be desirable.

The kinetic energy of the flywheel is a function of the square of the speed (rpm), so it is important to keep the speed as constant as possible.

This is not always easy, because appreciable motor power is only needed during acceleration of the mass. Once the operational speed has been reached, only the friction needs to be overcome, for which a very low power is sufficient. The motor is now practically idling, and may get into an unstable state (e.g., with series-connected collector motors).

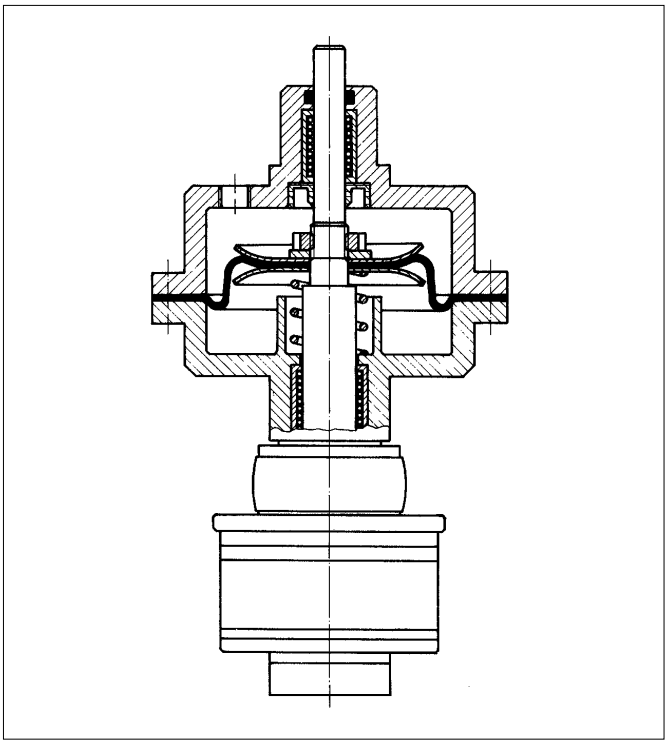

Fig. 10.15 **Welding Head with Diaphragm**

Examples of suitable drives for this type of rotation-welding machines are:

- Repulsion motors, based on the principle of adjustable brushes. Single-phase 0,5 kW motors operating at about 4000 rpm are generally adequate. A disadvantage of this kind of motor is the difficulty of fine speed control.
- Thyristor controlled three-phase or single-phase squirrel cage motors. The control unit must enable speed to be adjusted independently for the load, which is not always the case.
- D.C. shunt motors with armature voltage adjustment. These are very suitable. Control unit costs are very modest, so that the overall cost remains reasonable. The speed can be kept constant enough without using a tacho-generator and the control range is more than sufficient.

Experimental welding machines, or production machines used for parts of different diameters, must be fitted with one of these types of motor.

For machines used only for joining one particular component, a variable-speed drive is not absolutely essential, although of course very useful. If the machine has a fixed-speed drive, then it is better to start operating at a rather higher speed than is strictly necessary. This builds up a little extra energy, so that proper welds will still be made even when the joints fit together badly because of excessive moulding tolerances. Of course, more material will be melted than is strictly necessary.

Compressed air motors or turbines are occasionally used to drive the machines, but they are more expensive, both in initial investment and in running costs, than electric motors, and do not present any advantage.

Jigs (Holding Devices)

These can be subdivided depending on whether:

- the parts are gripped by a jig which is already rotating as the spindle descends; or
- the parts must be placed in the jig when the spindle is stationary.

In the first case, the cycle time is shorter, and this solution is therefore preferred whenever possible. The following types of jigs are suitable:

- A tooth crown as in Fig. 10.16 will grip the plastic part, as the spindle descends, and cause it to rotate with it. If the teeth are designed properly, and the piston moves fast enough, the unavoidable toothmarks made in the plastic can be kept small and clean. The cutting edges of the teeth must be really sharp. The teeth are not generally ground, but the crown must be hardened, especially on production machines.

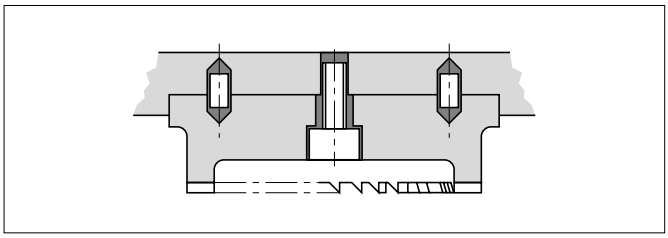

Fig. 10.16 **Jig Tooth Crown**

– The dimensions indicated in Fig. 10.17 are intended to be approximate; dimensions should be matched to the diameter of the part. With very thin-walled parts, it is better to reduce the distance between the teeth toensure that enough pressure is exerted on the joint.

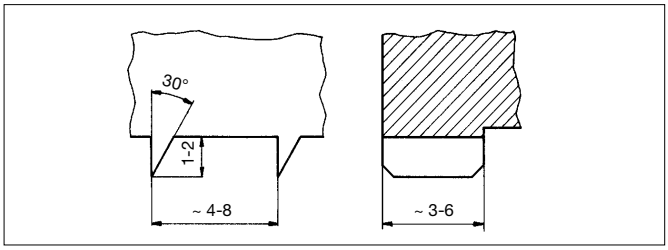

Fig. 10.17 **Suggested Tooth Dimensions**

– With larger or more complicated jigs it is better to design the tooth crown as a separate part which can be changed if necessary.

– Fig. 10.18 shows two typical weld sections with their corresponding tooth crowns and jigs.

– If the joints have no protruding bead, the bottom holder *a*, must fit closely, so as to prevent the part from expanding (especially if the wall is thin). The top of the plastic part, *b*, should if possible have a rounded bead, to make it easier for the teeth *c* to grip.
With inertia-type machines, an outer ring *d* is often necessary to centre the part accurately, especially if there is too much play between the bottom plastic part and its holder, or if the piston-rod guides are worn.

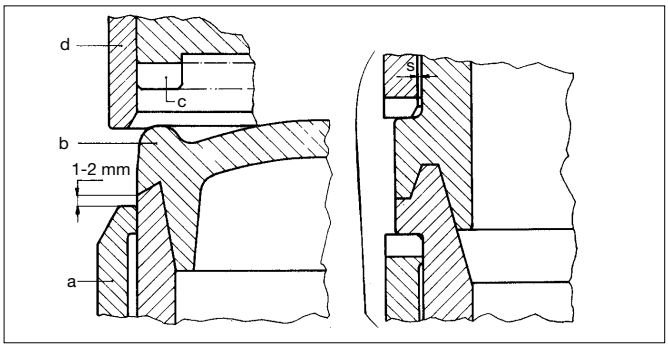

Fig. 10.18 **Typical Weld Sections**

– The bottom half of the plastic part can be fitted with an identical tooth crown (see also Figs. 10.13 and 10.20) to prevent its rotating. With the Venturi tube shown in Fig. 10.19, its side part is used for retention. Obviously this makes automatic insertion very difficult, if not impossible. The lower part is about 200 mm long, which in itself would make automation too complicated. This is a good example of what was said before about the minimum lenght of piston stroke. Since the total length of the welded parts is about 300 mm, the piston stroke would have to be about 350 mm; a machine like this would be impractical and expensive; and the rotating flywheel on the long piston-rod would be very dangerous. This problem could be avoided by using a turntable, but this would not be very practical either, because the parts are so long.

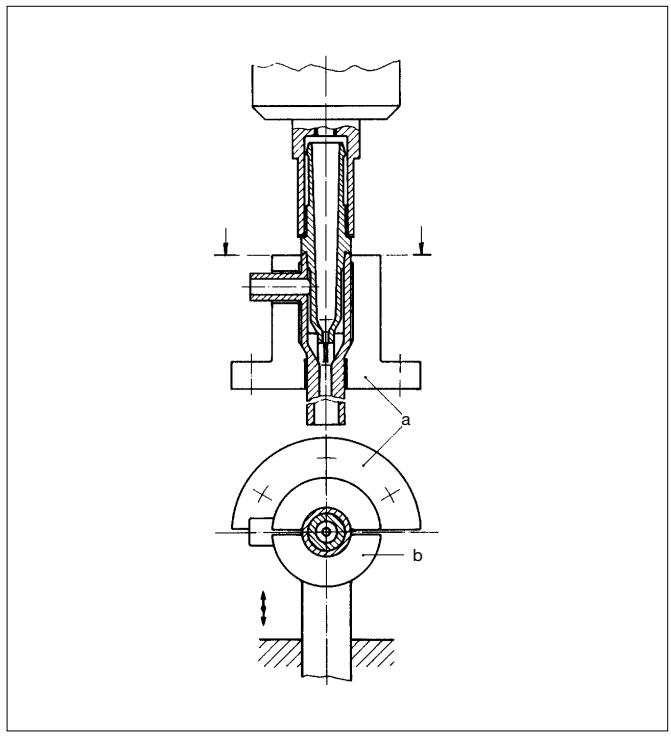

Fig. 10.19 **Part with Venturi tube**

– The arrangement suggested in the drawing shows a holder *a*, which embraces one half of the part only, the other being held by a pneumatic device *b*. This enables the piston-stroke to be kept short, and the parts are easily inserted and removed. In addition, the joints are supported around their entire circumference.

– Frequently the tooth crown cannot be sited immediately above the weld; e.g., with the float shown in Fig. 10.20 this is impossible for technical reasons. In such cases the length *L*, i.e. the distance between weld and tooth crown, must be in proportion to the wall thickness, so that the high torque and the welding pressure can be taken up without any appreciable deformation. This will of course also apply to the bottom plastic part.

– Selection of the joint profile and of the jig is often governed by the wall thickness.

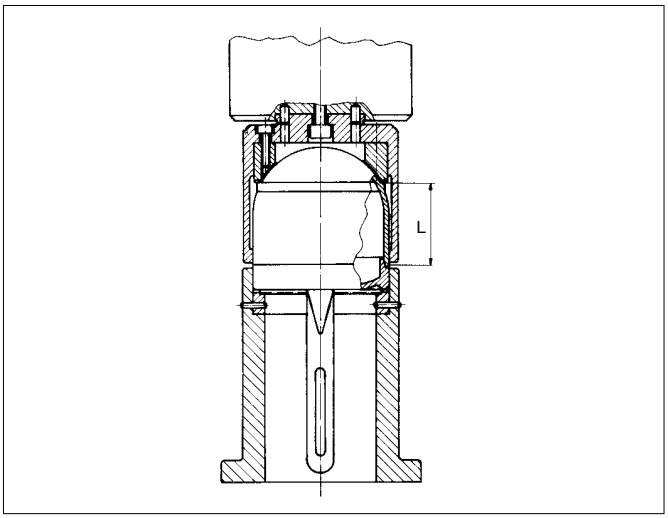

Fig. 10.20 **Part with Venturi tube**

Couplings with Interlocking Teeth

Instead of a tooth crown which has to be pressed into the plastic in order to transmit the torque, toothed couplings are occasionally used, and matching teeth are moulded into the plastic part; they may either protrude or be recessed (as in Fig. 10.21), whichever is more convenient.

The holder *a*, will have equal and opposing teeth, and when the plastic part is gripped no damage is caused. Ring faces *b* inside and outside the coupling will transmit the welding pressure to the part, so that the teeth, in fact, transmit only the torque. The number of teeth should be kept small to reduce the danger of their tips breaking off.

These tips should not be too sharp; the teeth should terminate in a tiny face *c* 0,3-0,5 mm.

This solution is also suitable for the pivot tools described before, which do not rotate as fast as inertia machines. With the high peripheral speed of inertia machines, it is more difficult to ensure that the teeth engage cleanly.

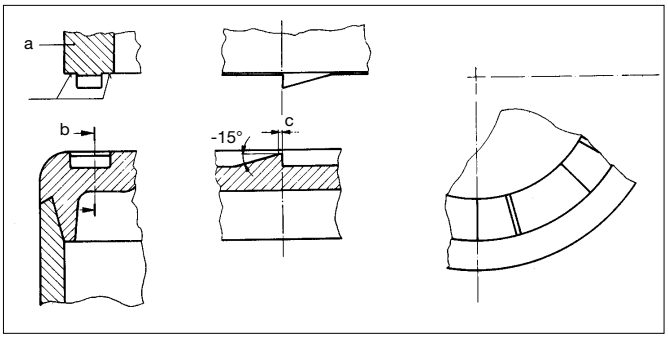

Fig. 10.21 **Couplings with interlocking teeth**

Cast Resin Couplings

In certain cases it is also possible to drive or grip the parts by means of elastomer jigs. Synthetic resins are cast directly into the holding device, the plastic parts forming the other portion of the mould, so as to get the right-shaped surface.

Since the maximum torque which can be transmitted in this manner is low, and the permissible pressure per unit area is low too, this method is only worth considering for parts having relatively large surfaces.

Conical parts are the most suited to this type of jig (see Fig. 10.22), because a greater torque can be transmitted for a given welding pressure.

When this type of jig is used with an inertia machine and the plastic part has to be accelerated to its welding speed, there is bound to be a certain amount of slip; this can cause excessive heating of the surface.

It is therefore extremely important to select a casting resin of the right hardness; this has to be determined experimentally. Fig. 10.22 shows, in essence, how the cast elastomer *a*, also has to be anchored to the metal parts by bolts, undercuts or slots. The recesses *b* are machined out afterwards, because contact here should be avoided.

Making cast resin grips requires a lot of experience and suitable equipment. The initial costs of this method are therefore considerable and it has not found many practical applications.

It may however be economically worth considering for machines with turntables which need several holders.

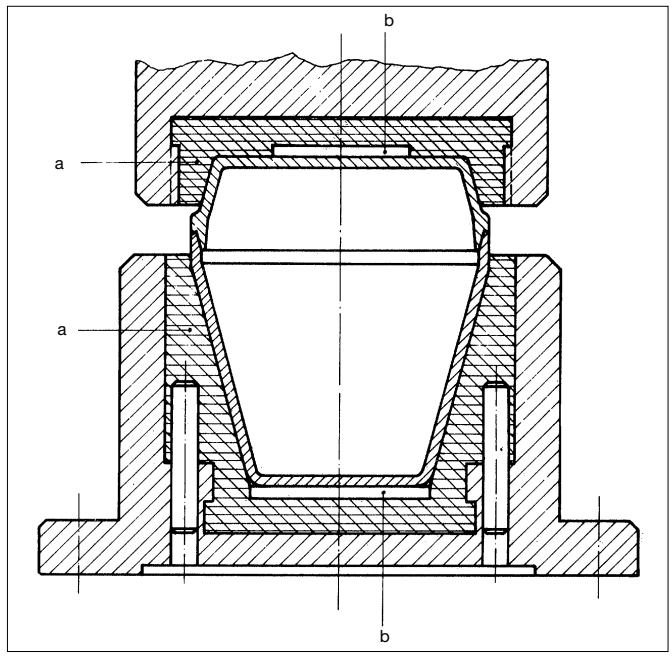

Fig. 10.22 **Cast Resin Coupling**

Joint Profiles

If welded joints are to be tight and strong, some attention must be paid to the joint profiles. The strength of the weld should be at least as great as that of its two component parts, so that the area of the weld face must be about 2-2,5 times the cross-section of the wall.

V-profiles, used for many years now, have proved far the best; Fig. 10.23 shows two typical examples.

The joint profile in Fig. 10.23*a* is suitable for parts having equal internal diameters, which can be provided with external shoulders for the purpose of driving or gripping. (For example, cylindrical containers or pressure vessels which have to be made in two parts on account of their length).

The profile in Fig. 10.23*b* is particularly suitable for the welding-on of bases or caps (for instance, on butane gas lighter cartridges, fire extinguishers, or aerosol bottles).

The wall thickness dimensions given are only suggestions; the structure of the parts must of course also be taken into consideration. But the area of the joint face should never be reduced. Plastics which have a high coefficient of friction tend to be self-locking if the angle of inclination is too small, preventing the tooth crown from rotating and causing it to mill off material. Angles of less than 15° should therefore be employed only with the greatest care.

For profiles like that in Fig. 10.23*a*, a certain amount of play should be provided for, before welding, between the surfaces at right angles to the axis of the part. This ensures that the entire pressure is first exerted on the inclined faces, which account almost entirely for the strength of the joint.

It is impossible to prevent softened melt from oozing out of these joints and forming flash, which is often a nuisance and has to be removed afterwards. If the welded vessels contain moving mechanical parts, loose crumbs of melt inside could endanger their correct functioning and cannot therefore be allowed.

Figs. 10.24*a*-*d* show four suggested joint profiles, all of which have grooves to take up the flash.

The simple groove flash trap shown in Fig. 10.24*a* will not cover up the melt but will prevent it from protruding outside the external diameter of the part; this is often sufficient. The overlapping lip with small gap, shown in Fig. 10.24*b*, is common.

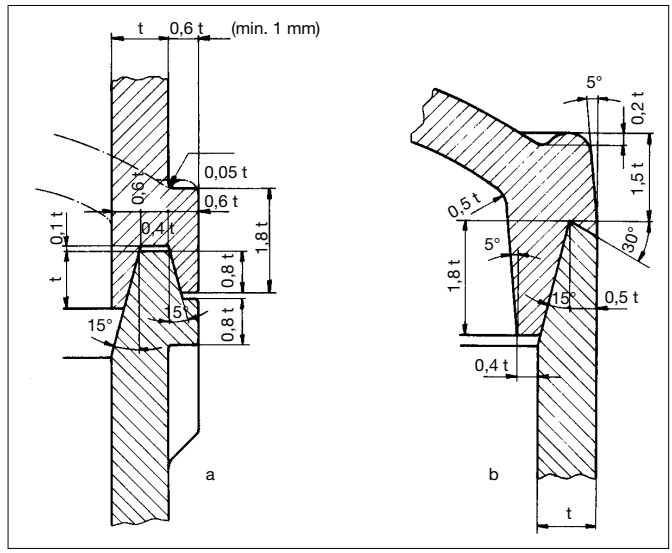

Fig. 10.23 **Joint Profiles**

Fig. 10.24*c* shows flash traps so arranged that they are closed when welding is complete. Fig. 10.24*d* shows a lip with a slight overlap on the inside, which seals the groove completely and prevents any melt from oozing out. The external lip will meet the opposite edge when the weld is complete.

The type of weld profile shown in Fig. 10.23*b* can also be given an edge which projects to the same extent as the top of the container.

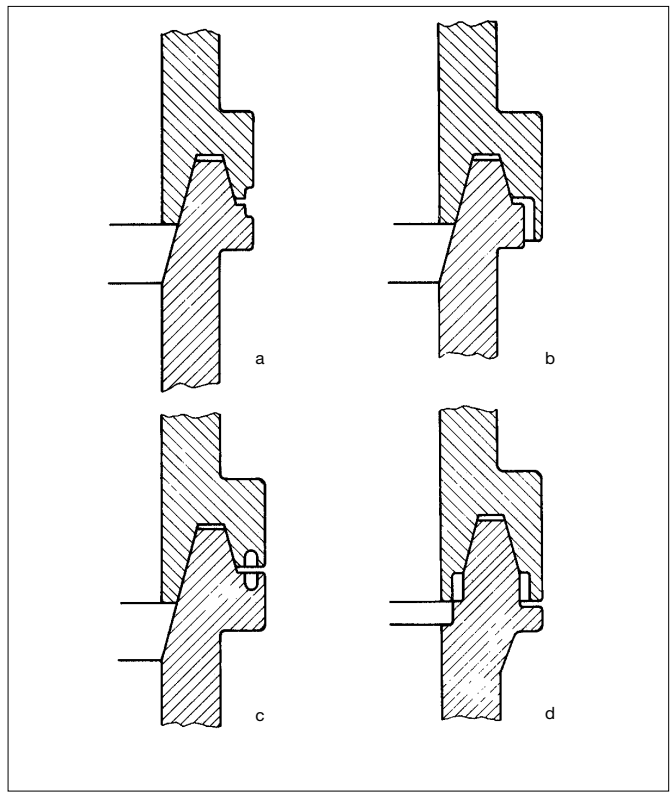

Fig. 10.24 **Joint Profiles with flash traps**

Fig. 10.25 shows such a design, used occasionally for butane refill cartridges. Generally an open groove is good enough. A thin undercut lip *a*, can also be used, so that the flash trap becomes entirely closed. Of course, a lip like this can be provided on the outside too, but it demands more complicated tooling for the ejector mechanism and should not therefore be used unless absolutely essential.

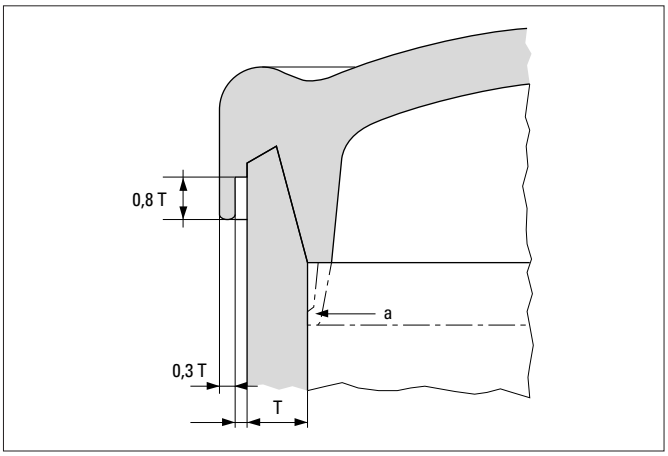

Fig. 10.25 **Joint with prevented outside protrusion**

Calculations for Inertia Welding Tools and Machines

In order to bring a plastic from a solid to a molten state a certain amount of heat, which depends on the type of material, is necessary. Engineering plastics actually differ very little in this respect, and so this factor will be neglected in the following discussion.

The quantity of heat required for melting is produced by the energy of the rotating masses. When the joint faces are pressed together, the friction brings the flywheel to a stop in less than a second.

With plastics having a narrow melting temperature range, such as acetal resins, the tool should not perform more than one or two revolutions once contact has been made. If the pressure between the two parts is too low, the flyweight will spin too long, and material will be sheared off as the plastic solidifies, producing welds which are weak or which will leak.

This factor is not so important with amorphous plastics, which solidify more slowly. For all plastics, it is best to use higher pressures than are absolutely necessary, since in any case this will not cause the weld quality to suffer.

To get good results with inertia machines, the following parameters should be observed:

a) Peripheral speed at the joint

As far as possible, this should not be lower than 10 m/sec. But with small diameter parts it is occasionally necessary to work between 5 and 10 m/sec, or else the required rpm's will be too high. In general, the higher the peripheral speed, the better the result. High rpm's are also advantageous for the flywheel, since the higher the speed, the smaller the mass needed for a given size of part to be joined.

b) The flywheel

Since the energy of the flywheel is a function of its speed of rotation and of its moment of inertia, one of these parameters must be determined as a function of the other. The kinetic energy is a function of the square of the speed (rpm's), so that very slight changes in speed permit adjustment to the required result.
In general, for engineering plastics, the amount of effort needed to weld 1 cm^2 of the projection of the joint area is about 50 Nm.
The amount of material which has to be melted also depends on the accuracy with which the two profiles fit together, and therefore on the injection moulding tolerances. It would be superfluous to carry out too accurate calculations because adjustments of the speed are generally required anyway.

c) Welding pressure

As mentioned above, the pressure must be sufficient to bring the mass to rest within one or two revolutions. As a basis for calculation, we may assume that a specific pressure of 5 MPa projected joint area is required. It is not enough merely to calculate the corresponding piston diameter and air pressure; the inlet pipes and valves must also be so dimensioned that the piston descends at a high speed, as otherwise pressure on the cylinder builds up too slowly. Very many of the unsatisfactory results obtained in practice stem from this cause.

d) Holding pressure

Once the material has melted, it will take some time to re-solidify, so that it is vital to keep up the pressure for a certain period, which will depend on the particular plastic, and is best determined experimentally.
For DELRIN®, this is about 0,5-1 seconds, but for amorphous plastics it is longer.

Graphical Determination of Welding Parameters

The most important data can be determined quickly and easily from the nomogram (Fig. 10.26) which is suitable for all DuPont engineering plastics.

Example: First determine the mean weld diameter *d* (Fig. 10.27) and the area of the projection of the joint surface *F*.

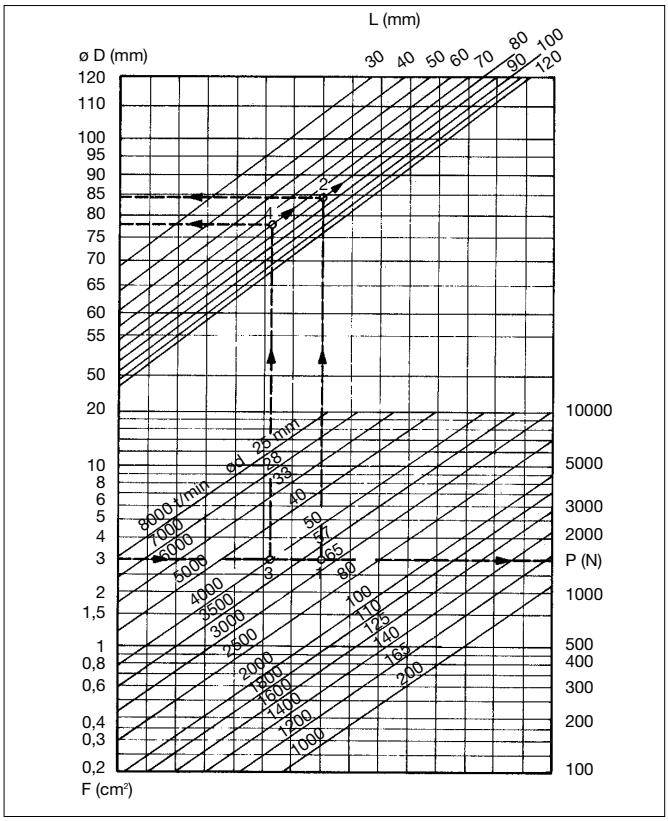

Fig. 10.26 **Determination of Welding Parameters**

For the example illustrated, *F* is about 3 cm² and the mean weld diameter *d* = 60 mm. Starting at 3 cm² on the left-hand scale, therefore we proceed towards the right to meet the line which corresponds to a diameter of 60 (Point 1), and then proceed vertically upwards. A convenient diameter and associated length of flywheel (see Fig. 10.28) are chosen. But the diameter should always be greater than the length, so as to keep the total length of the rotating flywheel as small as possible. In the example illustrated, a diameter of approximately 84 mm has been chosen, giving a length of 80 mm (Point 2).

The nomogram is based on a peripheral speed of 10 m/sec, which gives about 3200 rpm in this example (60 mm diameter). A higher speed can be chosen, say 4000 rpm, which corresponds to Point 3. The tool dimensions obtained by moving upwards from this point will of course be smaller than before.

In this example we have Point 4, which corresponds to a diameter of 78 mm and a length of 70 mm.

Moving towards the right from the point corresponding to 3 cm², the corresponding welding force required is read off from the right-hand scale; in this case, about 1500 N.

This nomogram considers only the external dimensions of the tools, and ignores the fact that they are not solid; but the jig to some extent compensates for this, and the values given by the nomogram are accurate enough.

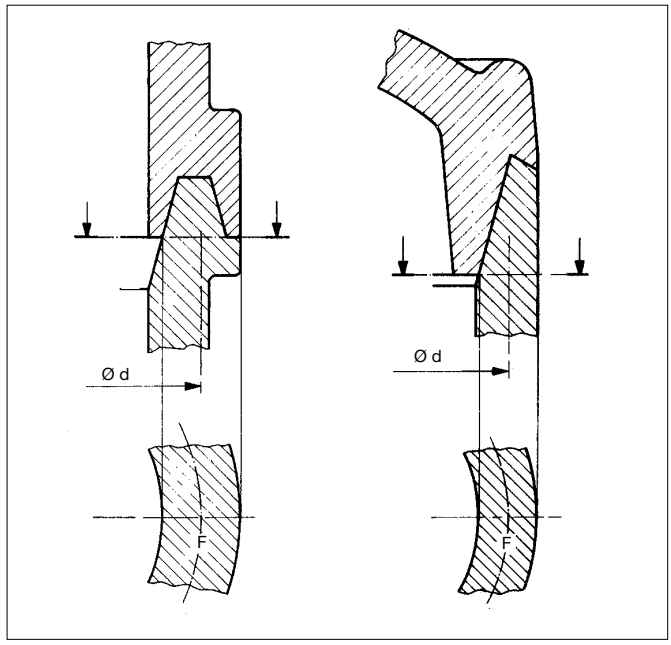

Fig. 10.27 **Welding Parameters Example**

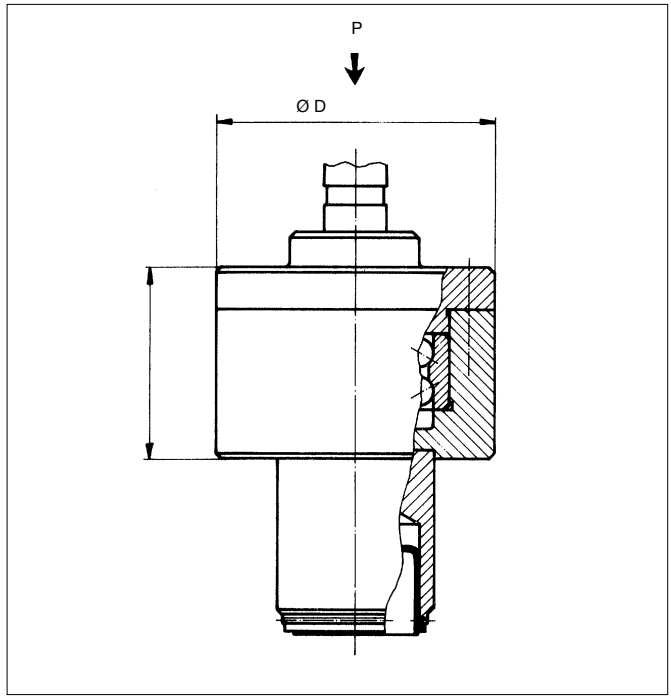

Fig. 10.28 **Flywheel Size Example**

Motor Power

In addition to their many other advantages, inertia tools require only a very low driving power.

In a fully or semi-automatic machine, the entire cycle lasts between 1 and 2 seconds, so that the motor has sufficient time to accelerate the flyweight up to its operating speed. During welding the kinetic energy of the tool is so quickly converted into heat that considerable power is generated.

For example, if the two tools considered in the nomogram of Fig. 10.26 are stopped in 0,05 sec, they will produce about 3 kW during this time. If a period of 1 second is available for accelerating again for the next welding cycle, a rating of only 150 W would theoretically be required.

0,5 kW motors are sufficient to weld most of the parts encountered in practice.

We have already mentioned that it is highly desirable to be able to vary the speed. With production machinery which always welds identical parts, the speed can be adjusted by changing the belt pulleys.

Quality Control of Welded Parts

To ensure uniform quality, the joint profiles should first be checked on a profile projector to see that they fit accurately. Bad misfits and excessive variations in diameter (due to moulding tolerances) cause difficulties in welding and poor quality welds. Correctly dimensioned joint profiles and carefully moulded parts will render systematic checking at a later stage superfluous.

If, for example, the angles of the two profiles do not match (Fig. 10.29), the result will be a very sharp notch which can lead to stress concentrations under heavy loads, thus reducing the strength of the entire part. It also means that too much material has to be melted away.

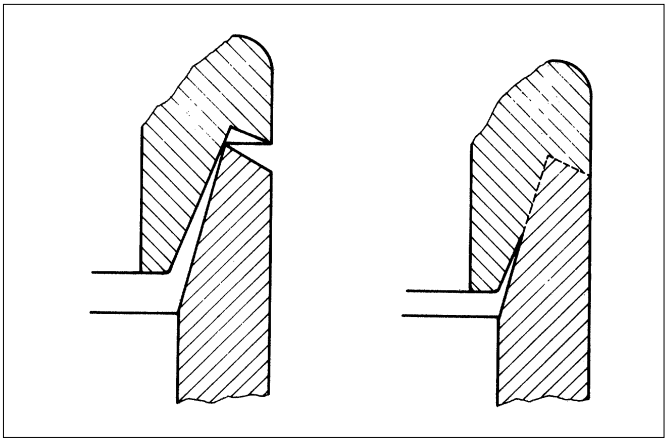

Fig. 10.29 **Joint with bad angles**

The essential criteria for weld quality are the mechanical strength and water-tightness or air-tightness, or both. The following methods are available for testing:

a) *Visual inspection* of welds has a very limited application and gives no information about strength or tightness. It can only be carried out when the flash is actually visible, i.e. not contained in a flash trap.
When welding conditions are correct, a small quantity of flash should form all round the weld. If it is irregular or excessive, or even absent altogether, the speed should be adjusted. Naturally, only as much plastic should be melted as is absolutely necessary. But if no flash is visible at all, there is no guarantee that the joint has been properly welded (always assuming, of course, that there is no flash trap).

   The appearance of the flash depends not only on the type of plastic but also on its viscosity and on any fillers. For example, DELRIN® 100 produces rather a fibrous melt, while DELRIN® 500 gives a molten weld flash. The peripheral speed also affects the appearance, so it is not possible to draw any conclusions about the quality of the joint.

b) *Testing the strength* of the welds to destruction is the only way to evaluate the weld quality properly and to be able to draw valid conclusions.

   Most of the articles joined by spin welding are closed containers which will be under short-term or long-term pressure from the inside (lighters, gas cartridges, fire extinguishers) or from the outside (deep-water buoys). There are also, for example, carburettor floats, which are not under stress, and for which the joint only needs to be tight. For all these parts, regardless of the actual stresses occurring in practice, it is best as well as easiest to increase the internal pressure slowly and continuously until they burst. A device of this kind, described later on, should enable the parts to be observed while the pressure is increasing, and the deformations which take place before bursting very often afford valuable information about any design faults resulting in weak points.

   After the burst test, the entire part (but particularly the welded joint) should be examined thoroughly. If the weld profiles have been correctly dimensioned and the joint properly made, the weld faces should not be visible anywhere. Fracture should occur right across the weld, or along it. In the latter case, it is not possible to conclude whether or not the weld has been the direct cause of the fracture. This may have been the case when there is a severe notch effect as, for example, in Fig. 10.29.

   For parts which are permanently under internal pressure during service, and are also exposed to temperature fluctuations, the burst pressure must be eight to ten times the working pressure. This is the only guarantee that the part will behave according to expectation during the whole of its service life (butane gas lighters, for instance).

Since we are dealing only with cylinders, it is very helpful to determine the hoop stresses and compare them with the actual tensile strength of the plastic. If the ratio is poor, the cause of failure does not necessarily lie in the weld. Other causes may be: structural defects, orientation in thin walls unsatisfactory arrangement or dimensioning of the gates, weld lines, or bending of the centre core causing uneven wall thickness.

Glass fibre reinforced plastics are rather different. Higher glass content means higher strength, but the proportion of surface available for welding is reduced by the presence of the glass fibres. Consequently the ratio of the actual to the calculated burst pressure is low, and in certain cases the weld may be the weakest spot of the whole part.

The importance of correct design of pressure vessels for spin welding is shown by the following examples. After welding, the two cartridges in DELRIN® 500 acetal resin (Fig. 10.30) were tested to burst under internal pressure, and yielded the following results:

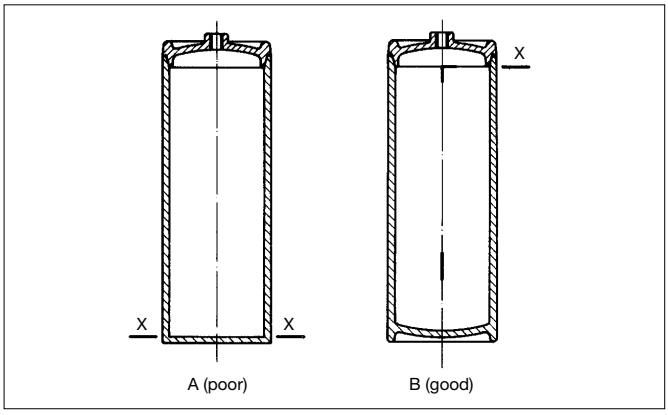

Fig. 10.30 **Designs of pressure cartridges**

Cartridge *A* split in the *X–X* plane, with no damage either to the cylinder or to the weld. This fracture is undoubtedly attributable to the flat bottom and sharp internal corner, i.e. to poor design. The burst pressure was only 37% of its theoretical value.

Cartridge *B* first burst in the direction of flow of the material, and then along the weld, without splitting it open. The burst pressure was 80% of the theoretical value, which can be considered acceptable.

However, it is not possible to draw any conclusions about water or gas tightness from the mechanical strength of the joint.

Pressure vessels and floats must therefore also be tested in the appropriate medium. Containers which will be under internal pressure are stressed to about half the burst pressure, which should enable all weak points to be detected. Floats and other tight containers are inspected by dipping into hot water and looking for bubbles at the joint.

It is, however, quicker and more reliable to test them under vacuum and a simple apparatus like that sometimes used for testing waterproof watches will often be all that is necessary.

– Fig. 10.31 illustrates the basic principle.
  A cylindrical glass vessel *a*, big enough to hold the part, is covered with a loose-fitting lid *b* and sealed with a rubber ring. The test piece is kept under water by the sieve *c*. Since the water level is almost up to the top of the vessel, only a small volume of air need be pumped out to produce an adequate vacuum; in fact, only a single stroke of a small hand pump will do. The rig should preferably be fitted with an adjusting valve to limit the degree of vacuum and prevent the formation of bubbles by boiling.

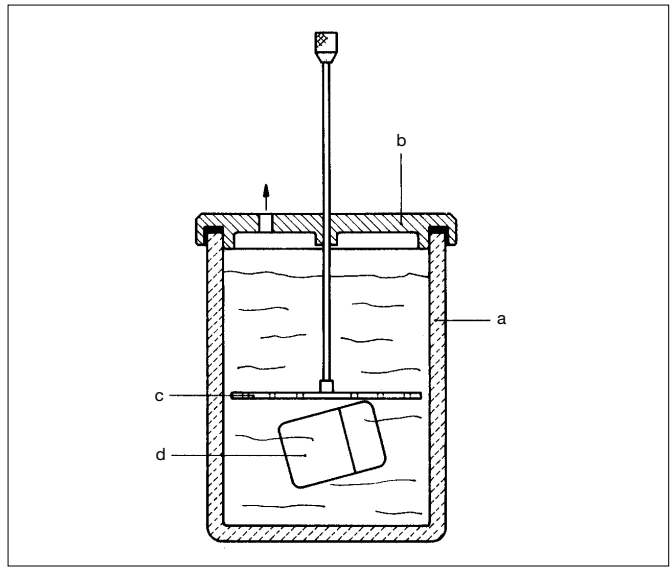

Fig. 10.31 **Tightness Test using Vacuum**

Checking Weld Joints by Inspection of Microtome Sections

Correct design and proper welding should render microtome sections superfluous. The making of these sections requires not only expensive equipment but also a considerable amount of experience.

However, such sections can occasionally result in the discovery of the causes of poor welds as, for example, in Fig. 10.32, which clearly shows how the V-groove was forced open by the welding pressure and the matching profile was not welded right down to the bottom of the V. The resulting sharp-edged cavity not only acted as a notch, but increased the risk of leaking.

Testing of spin welded joints should only be carried out at the beginning of a production run, and thereafter on random samples, except when there is a risk that some parameter in the injection moulding or the welding process may have changed. The percentage of rejects should remain negligible if the correct procedure is followed, and systematic testing of all welded components will not be necessary.

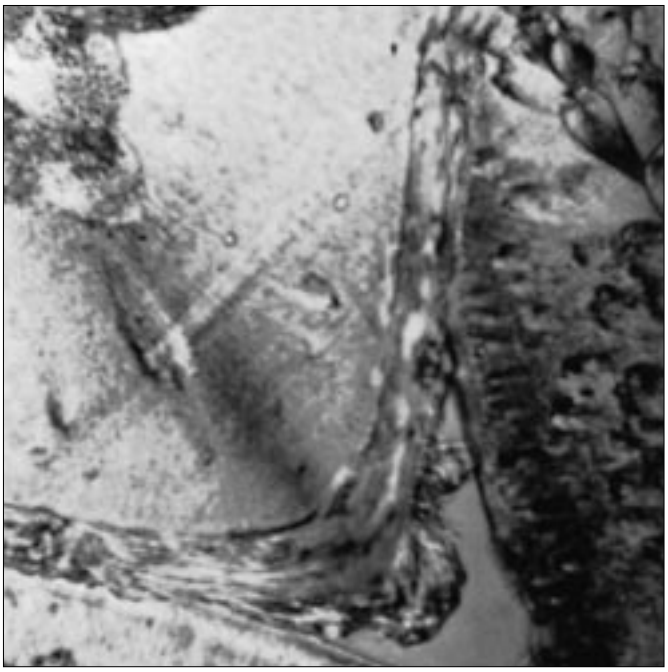

Fig. 10.32 **Microtome of badly welded V-groove**

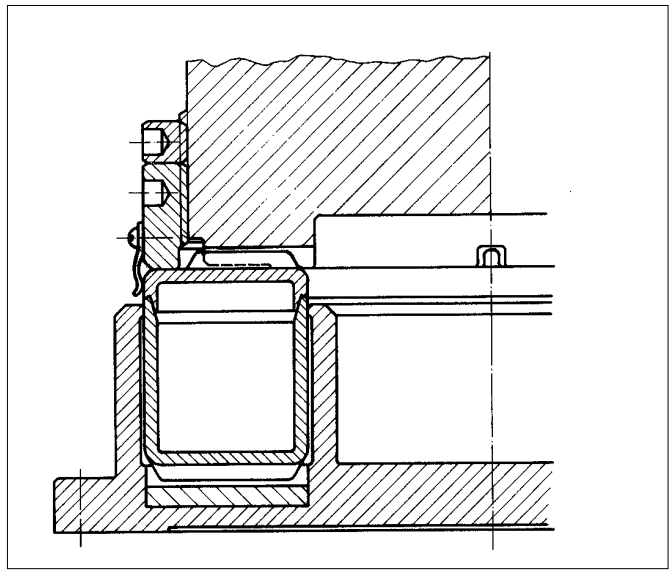

Fig. 10.33 **Welding Double Joints**

Welding Double Joints

The simultaneous welding of two joints, e.g. in the carburettor float in Fig. 10.33, requires special processes and greater care. Practical experience has shown that it is impossible to get good results if the two halves are gripped and driven by tooth crowns. Recesses or ribs must always be provided. It is best if the machine has facilities for adjusting the respective heights of the inner and outer jig faces, so that the weld pressure can be distributed over both joints as required.

In these cases the moment of inertia and the welding pressure must be calculated for the sum of the surfaces. The speed, on the other hand, should be chosen as a function of the smaller diameter.

Fig. 10.33 shows a double-joint float, with appropriate jigs and small ribs for driving the parts. After welding, the spindle does not travel all the way up, so that the next part can be inserted into the jig at rest; only then is the flyweight engaged and accelerated to its operating speed.

The dimensions of the plastic parts should preferably be such that the inner joint begins to weld first, i.e. when there is still an air-gap of about 0,2–0,3 mm on the outer joint (Fig. 10.34).

Welding double joints becomes more difficult as the ratio of the two diameters increases. Although, in practice, parts with an external diameter of 50 mm and an internal diameter of 10 mm have been joined, these are exceptions.

Designs like this should only be undertaken with very great care and after expert advice.

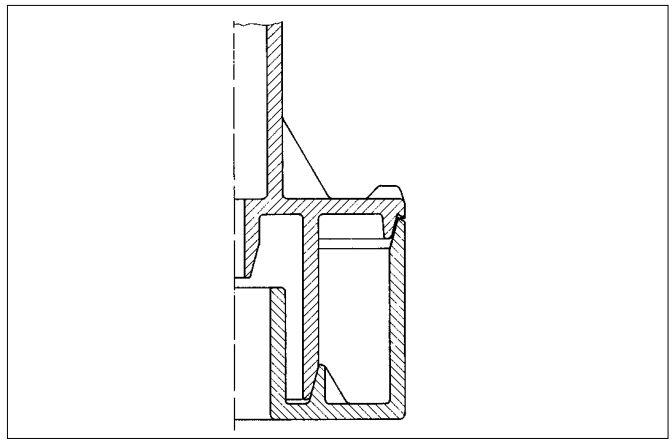

Fig. 10.34 **Design of double joints**

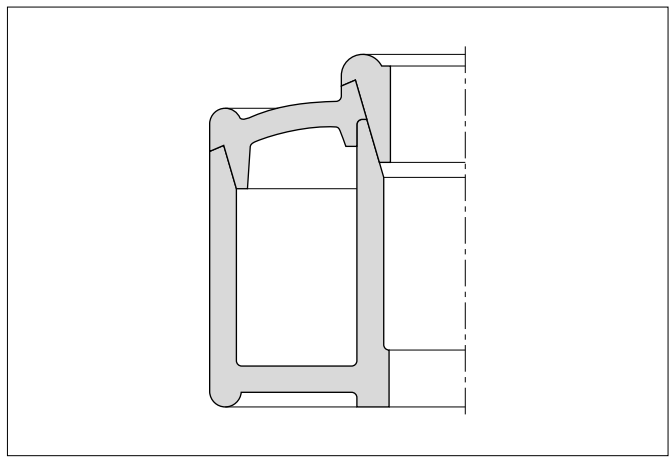

Fig. 10.35 **Double joint split-up in 2 single joints**

In order to avoid all risks, it is better to follow the procedure shown in Fig. 10.35. Here the double joint has been divided into two single ones, which can be welded one after the other and which pose no problem. This solution enables the parts to be gripped with tooth crowns in the normal way, automation is easier, and the total cost is very little more than for one double joint, while avoiding long-winded and expensive preliminary testing.

Welding Reinforced and Dissimilar Plastics

Reinforced plastics can generally be welded just as easily as unreinforced ones. If the filler reduces the coefficient of friction, the weld pressure may sometimes have to be increased so as to reduce the effective weld time.

The weld strength of reinforced plastics is generally lower because the fibres on the surface do not weld together. This is not usually evident in practice, because the joint is not usually the weakest part. If necessary, the weld profile can be enlarged somewhat. In all plastics, glass fibres or fillers reduce tensile elongation, so that stress concentrations are very harmful. Designers pay far too little attention to this fact.

Occasionally one is also faced with the problem of joining plastics of different types, with different melting points. The greater the difference between the melting points, the more difficult welding will be, and one cannot call such a joint a true weld, as it is merely a mechanical adhesion of the surfaces. The strength of the joint will be low. It may even be necessary to have special joint profiles and work with very high weld pressures.

In practice there are very few such applications, and in all these cases the parts are not subjected to stresses. Typical applications are oil-level gauges and transparent polycarbonate spy-holes welded into holders of DELRIN®.

The following test results should give some idea of the possibilities of joining DELRIN® to other plastics.

The float of DELRIN® shown in Fig. 10.13 has a burst pressure of about 4 MPa. If a cap of some other material is welded onto a body of DELRIN®, the burst pressures are as follows:

ZYTEL® 101 (nylon resin)	0,15–0,7 MPa
Polycarbonate	1,2 –1,9 MPa
Acrylic resin	2,2 –2,4 MPa
ABS	1,2 –1,6 MPa

It must be remembered that, in all these cases, the weld forms the weakest point.

Spin Welding Soft Plastics and Elastomers

The softer the plastic, with a few exceptions (e.g. fluoropolymers), the higher the coefficient of friction. Spin welding therefore becomes increasingly difficult with soft plastics, for the following three reasons:

a) The deceleration produced by a high coefficient of friction is so great that the flyweight is unable to produce heat by friction. Much of the energy is absorbed in the deformation of the component, without any relative motion occurring between the joint faces. If the amount of kinetic energy is increased, one is more likely to damage the parts than to improve welding conditions.

   It is sometimes possible to solve this problem by spraying a lubricant onto the joint faces (e.g. a silicone mould release). This reduces the coefficient of friction very considerably at first, so that the usual rotation takes place. The specific pressure is, however, so high that the lubricant is rapidly squeezed out, the friction increases, and the material melts.

b) For soft plastics having a very low coefficient of friction a very much higher specific pressure is needed to produce sufficient heat by friction in a short time. Most components cannot stand such a high axial pressure without being permanently deformed, and there is to date no reliable way of making satisfactory joints between these materials by spin welding.

c) Soft plastic parts are difficult to retain and cannot easily be driven. Transmission of the high torque frequently poses an insoluble problem, particularly since it is scarcely possible to use tooth crowns.

To sum up, it can be said that marginal cases of this sort should be approached only with extreme caution, and that preliminary experimental work is unavoidable.

Figures 10.36–10.38 show only a few selected examples out of the great number of possibilities in this field.

Examples of Commercial and Experimental Spin Welding Machines

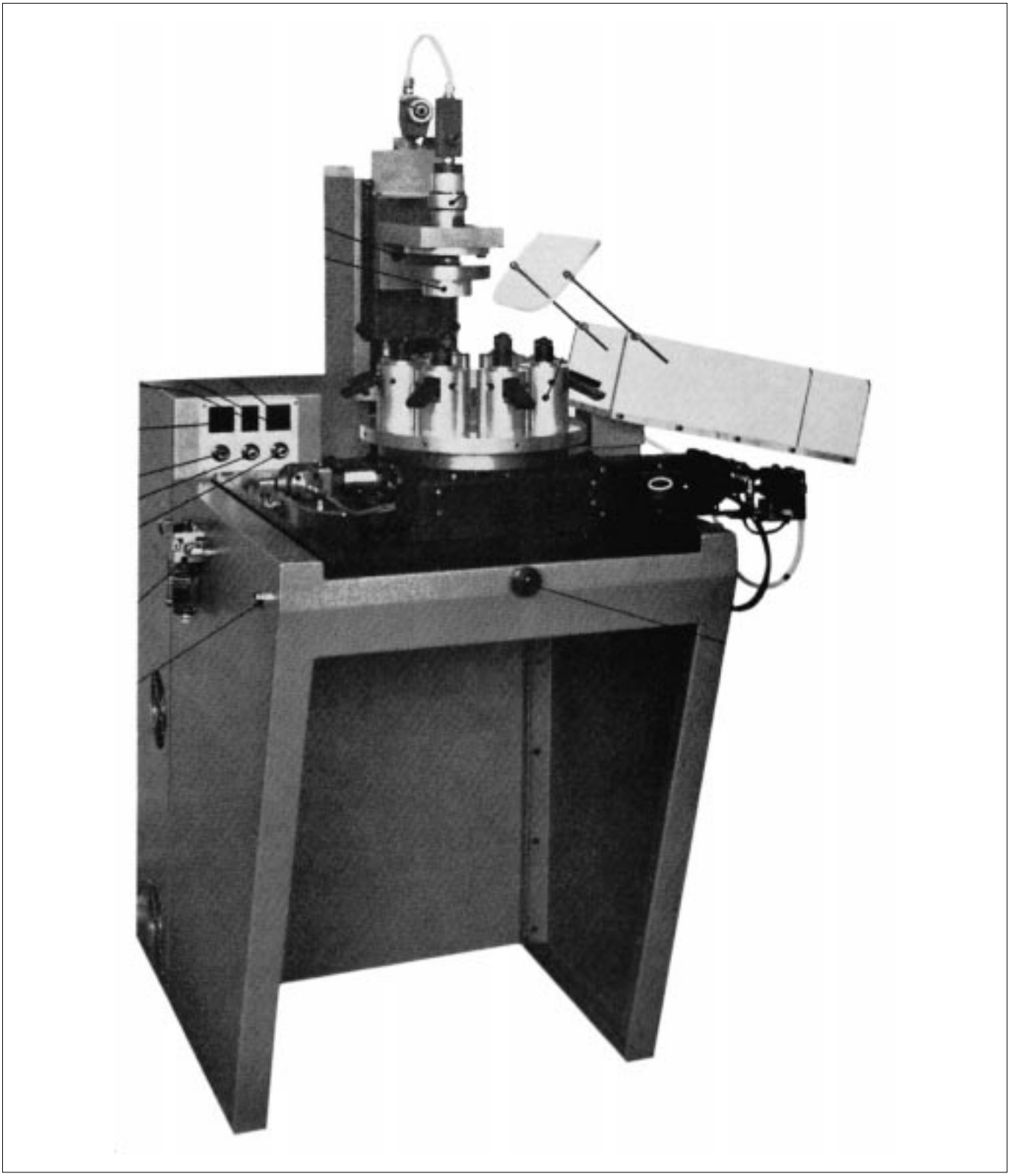

Fig. 10.36 **Commercial spinwelding machine. This machine is driven by a compressed air motor which allows the speed to be adjusted within broad limits. The specific model shown in the photograph is equipped with an 8-position turntable and jigs for welding a spherical container.**

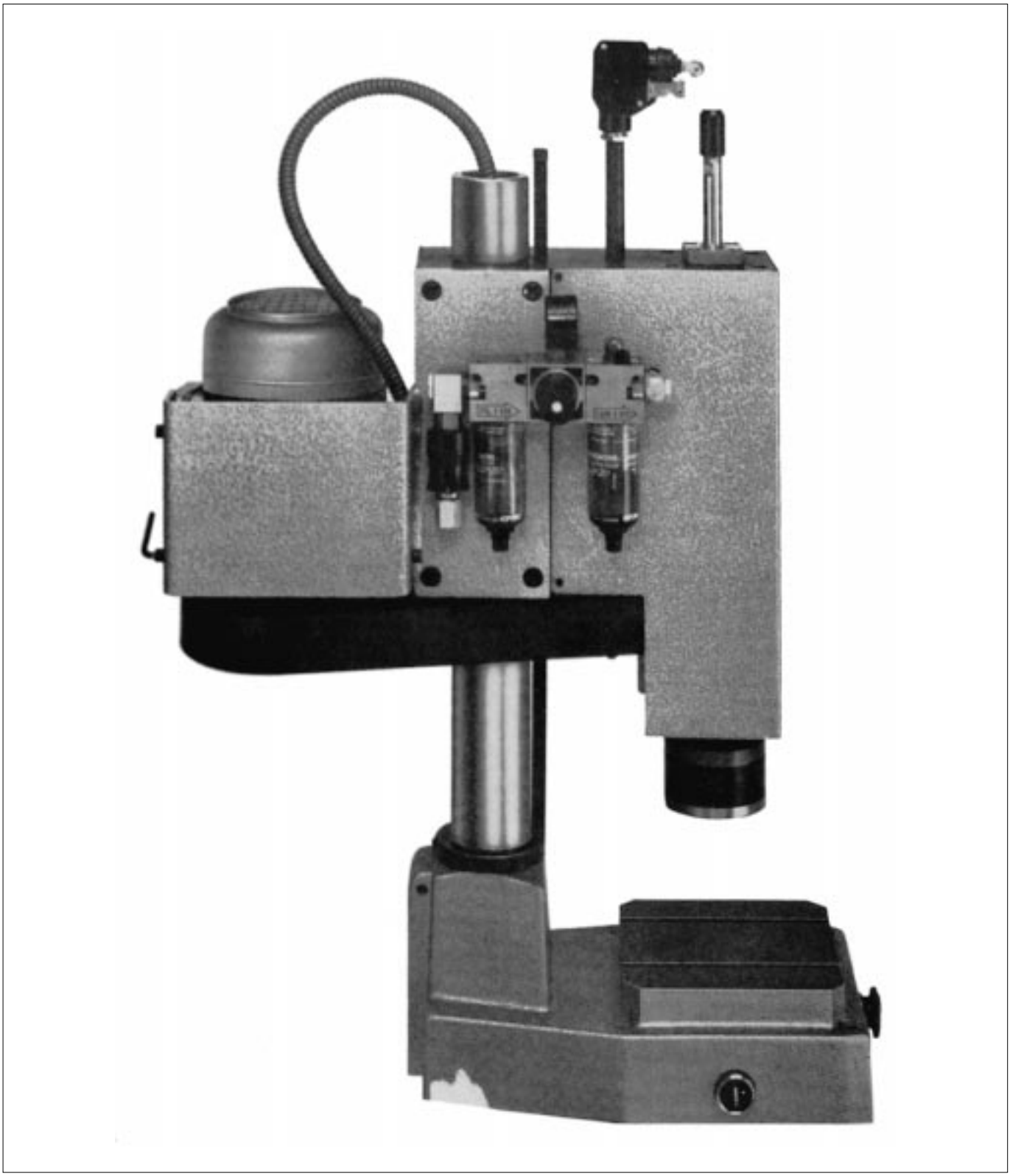

Fig. 10.37 **Commercial bench-type spinwelding machine. The basic model is equipped with a 3-phase squirrel cage motor. The rotating head with the jigs is fixed directly onto the double guided piston rod as shown in Figs. 10.12 and 10.13. The machine can also be supplied with adjustable speed, turntable, automatic cycle control and feeding device.**

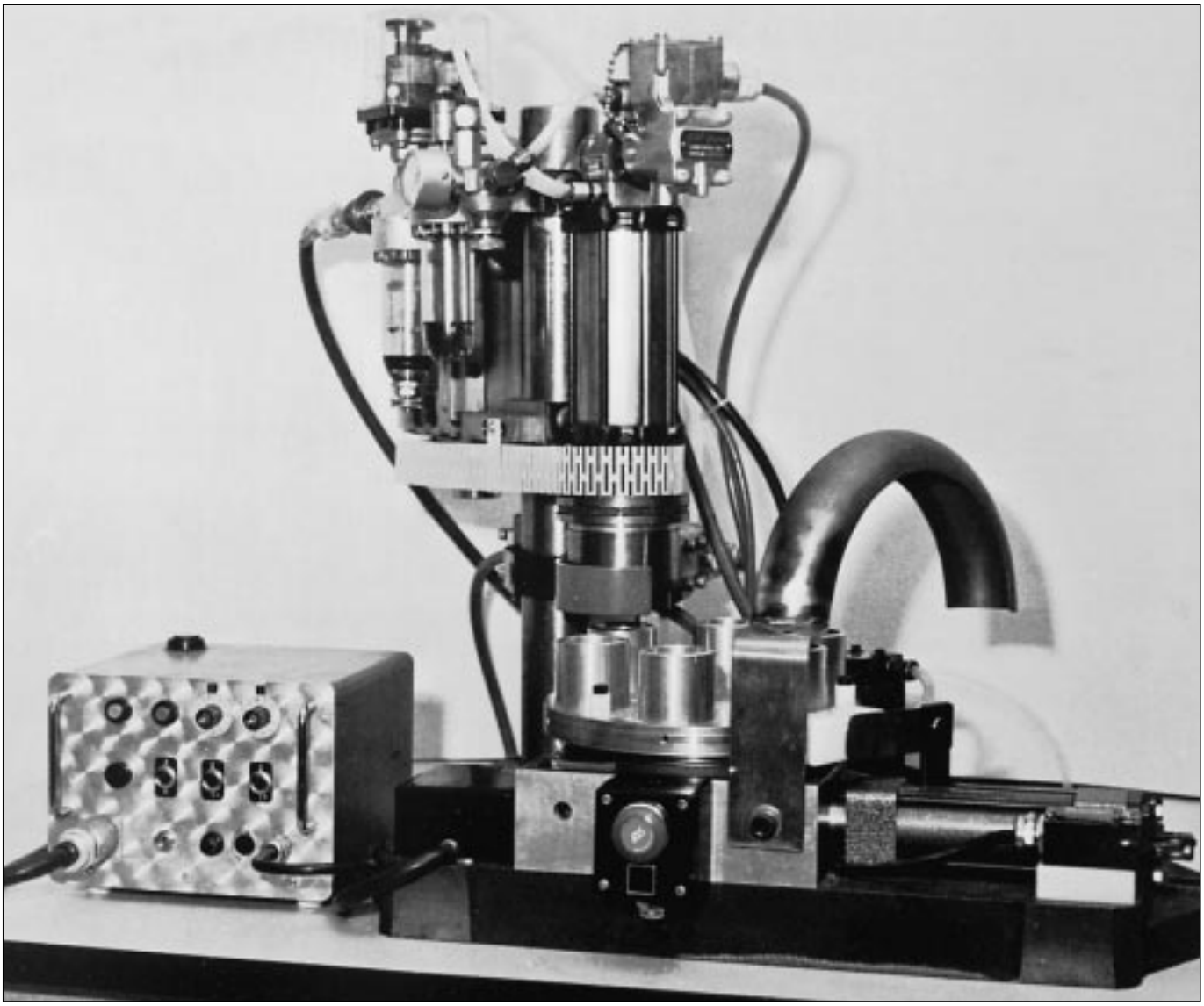

Fig. 10.38 **Universal inertia spinwelding machine, see also Fig. 10.13, for welding parts from 15-80 mm. By the addition of a turntable and an automatic cycle control device the unit can be made semi-automatic without involving too much expense. Even with manual feeding of the turntable (two parts simultaneously), a remarkably short total cycle time of 2 seconds can easily be achieved.**

Ultrasonic Welding

Introduction

Ultrasonic welding is a rapid and economical technique for joining plastic parts. It is an excellent technique for assembly of mass produced, high quality products in plastic materials.

Ultrasonic welding is a relatively new technique. It is used with ease with amorphous plastics like polystyrene which have a low softening temperature. Design and assembly, however, require more planning and control when welding amorphous plastics with higher softening temperatures, crystalline plastics and plastics of low stiffness.

This report presents the basic theory and guidelines for ultrasonic welding of parts of DuPont engineering plastics.

Ultrasonic Welding Process

In ultrasonic welding, high frequency vibrations are applied to two parts or layers of material by a vibrating tool, commonly called a ‘‘welding horn’’. Welding occurs as the result of heat generated at the interface between the parts or surfaces.

Equipment required for ultrasonic welding includes a fixture for holding the parts, a welding horn, an electromechanical transducer to drive the horn, a high frequency power supply and a cycle timer. The equipment diagrammed in Fig. 10.41 is described in detail later. Typical ultrasonic welding machines currently available are shown in Fig. 10.42.

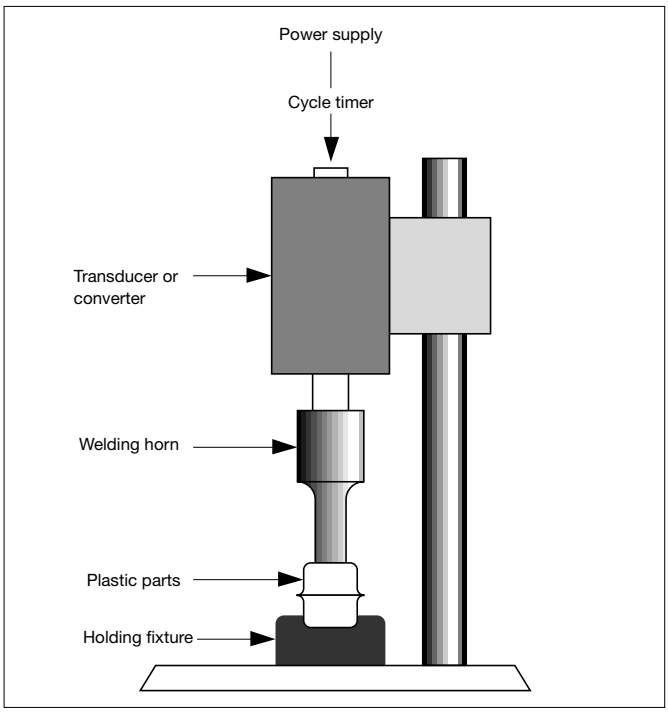

Fig. 10.41 **Components of ultrasonic welding equipment**

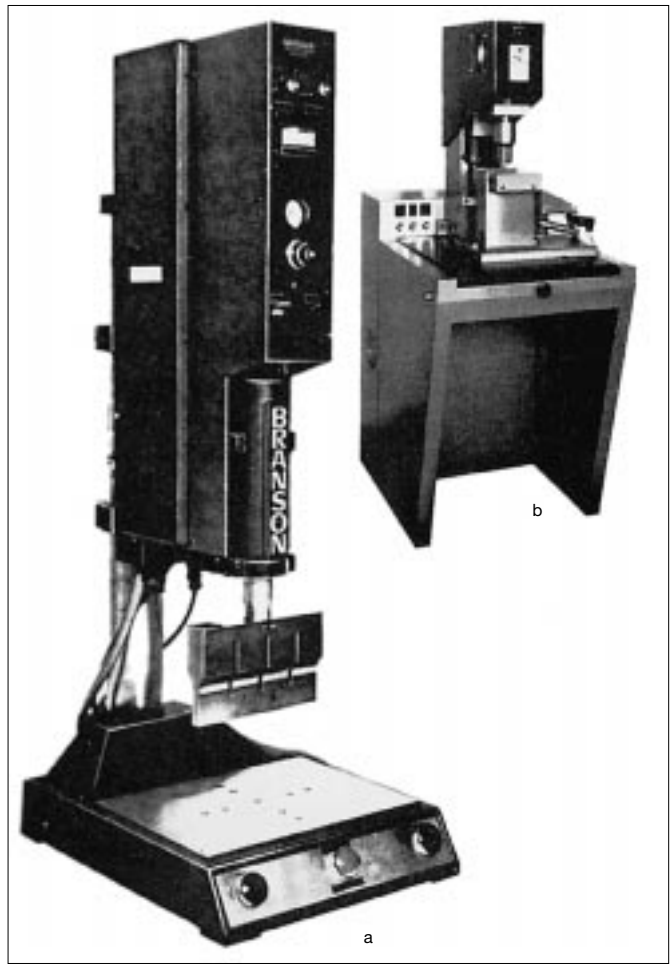

Fig. 10.42 **Typical ultrasonic welding machines, *b* with magnetostrictive transducer, *a* with piezoelectric transducer**

Vibrations introduced into the parts by the welding horn may be described as waves of several possible types.

a) Longitudinal waves can be propagated in any materials: gases, fluids or solids. They are transmitted in the direction of the vibration source axis. Identical oscillatory states (i.e. phases) depend on the wave length, both dimensionally and longitudinally. During the operation of mechanical resonators, the longitudinal wave plays almost exclusively the role of an immaterial energy carrier (Fig. 10.43a).

b) Contrary to the longitudinal wave, the transverse wave can be generated and transmitted only in solids. Transverse waves are high frequency electromagnetic waves, light, etc. Shear stresses are required to generate a transverse wave. The latter is moving in a direction perpendicular to the vibration inducing source (transverse vibration). This type of wave must be avoided or eliminated as far as possible, particularly in the ultrasonic welding applications, because only the superficial layer of the welding horn end is submitted to vibrations and thus, energy is not transmitted to the mating surfaces of the energy users (Fig. 10.43b).

c) Curved waves are generated exclusively by the longitudinal excitation of a part. Moreover, the generation of such waves in the application field of ultrasonics requires asymmetrical mass ratios. On the area we are considering, waves of this type lead to considerable problems. As shown on Fig. 10.43c, areas submitted to high compression loads are created at the surface of the medium used, and areas of high tensile strength also appear, meaning the generation of a partial load of high intensity.

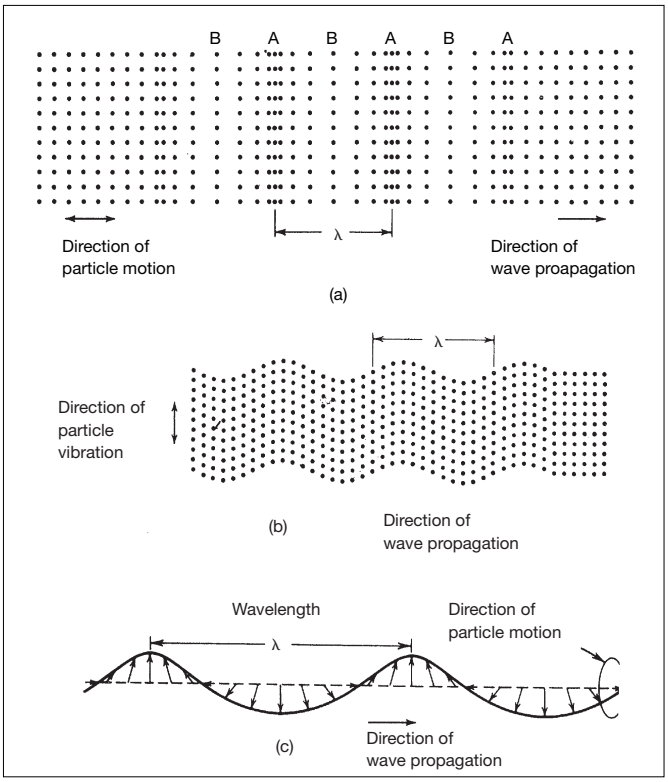

Fig. 10.43 **a) Longitudinal wave.**
b) Transverse wave.
c) Curved wave.

Besides, during the transmission of ultrasonic waves from the transducer to the welding horn, the wave generates a reciprocal vibration from the ceramics to the transducer which could cause the ceramics to break.

When designing welding horns, this situation and also the elimination of the curved waves should be taken carefully into account.

In the welding process, the efficient use of the sonic energy requires the generation of a controlled and localised amount of intermolecular frictional heat in order to purposely induce a certain ‘‘fatigue’’ of the plastic layer material at the joint or interface between the surfaces to be welded.

Heat is generated throughout the parts being welded during the welding process. Fig. 10.44 describes an experiment in which a 10 ×10 mm by 60 mm long rod is welded to a flat block of a similar plastic.

An ultrasonic welding tool for introducing ultrasonic vibrations into the rod is applied to the upper end of the rod. The block rests on a solid base which acts as a reflector of sound waves travelling through the rod and block. Thermocouples are embedded at various points along the rod. Ultrasonic vibrations are applied for 5 sec. Variation of temperature with time at 5 points along the rod are shown in the graph. Maximum temperatures occur at the welding tool and rod interface and at the rod to block interface; however, they occur at different times.

When sufficient heat is generated at the interface between parts, softening and melting of contacting surfaces occur. Under pressure, a weld results as thermally and mechanically agitated molecules form bonds.

Welding Equipment

Equipment required for ultrasonic welding is relatively complex and sophisticated in comparison with equipment needed for other welding processes like spin welding or hot plate welding. A complete system includes an electronic power supply, cycle controlling timers, an electrical or mechanical energy transducer, a welding horn, and a part holding fixture, which may be automated.

a) Power supply

In most commercially available equipment, the power supply generates a 20 kHz electrical output, ranging from a hundred to a thousand or more watts of rated average power. Most recently produced power supplies are solid state devices which operate at lower voltages than earlier vacuum tube devices and have impedances nearer to those of commonly used transducers to which the power supply is connected.

b) Transducer

Transducers used in ultrasonic welding are electromechanical devices used to convert high frequency electrical oscillations into high frequency mechanical vibrations through either piezoelectric or electrostrictive principle. Piezoelectric material changes length when an electric voltage is applied across it. The material can exert a force on anything that tries to keep it from changing dimensions, such as the inertia of some structure in contact with the material.

c) Welding Horn

A welding horn is attached to the output end of the transducer. The welding horn has two functions:

a) it introduces ultrasonic vibrations into parts being welded and

b) it applies pressure necessary to form a weld once joint surfaces have been melted.

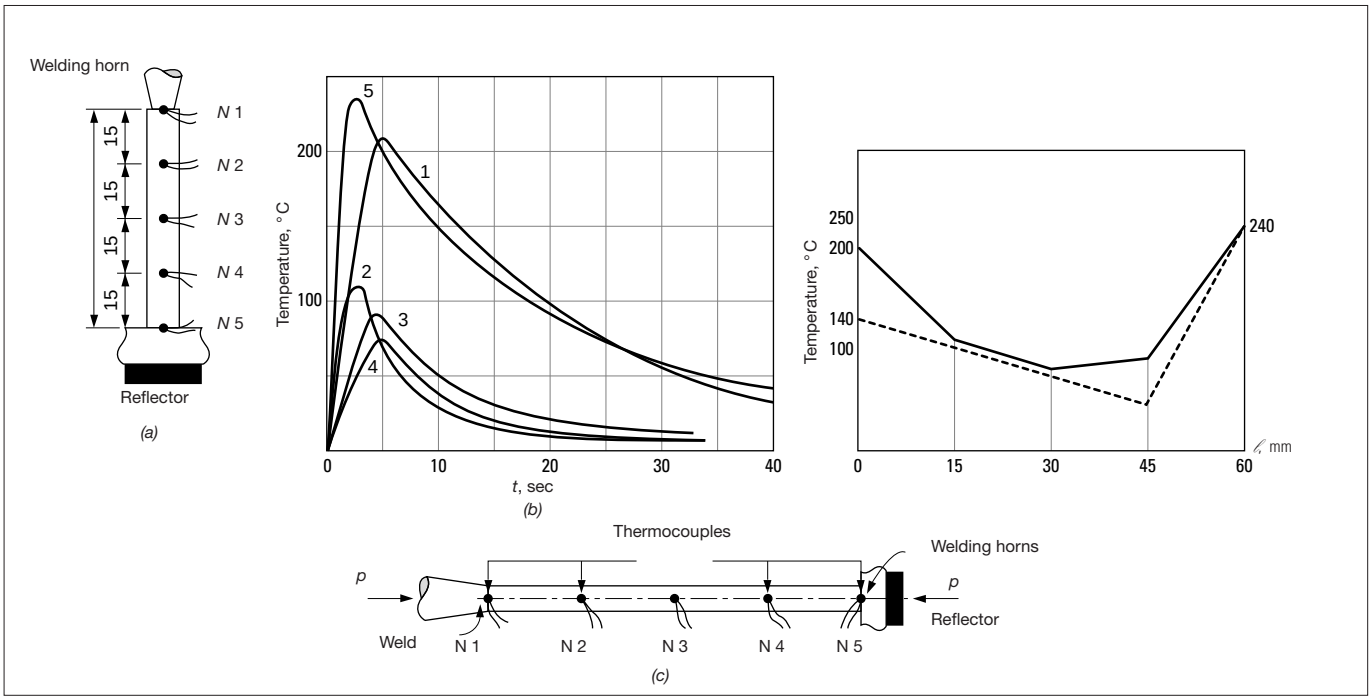

Fig. 10.44 **Variation of temperature along a plastic that has been ultrasonically joined in a tee weld to a plate of the same material.**
a) Schematic diagram of transducer, workpieces and thermocouples.
b) Variation of the temperature with time at various points along the rod.
c) Temperature readings when the weld site temperature is maximum (dashed line) and peak temperatures produced in the rod (solid line).

Plastic parts represent a ‘‘load’’ or impedance to the transducer. The welding horn serves as a means to match the transducer to the load and is sometimes called an impedance matching transformer. Matching is accomplished by increasing amplitude (and hence velocity) of vibrations from the transducer. As a measure of amplification, total movement or double amplitude of the transducer output may be approx. 0,013 mm while vibrations suitable for the welding range can be from 0,05 to 0,15 mm. Amplification or ‘‘gain’’ is one factor in establishing the design of welding horns. Typical welding horns are pictured in Fig. 10.45.

Profiles of stepped, conical, exponential, catenoidal, and fourier horns along with a relative indication of amplitude (or velocity) of the vibration and consequent stress along the horn length elements may be interconnected at stress antinodes, which occur at ends of each ½ wavelength element Fig. 10.46.

Interconnecting horns will increase (or decrease, if desired) the amplitude of vibrations of the last horn in the series. Such an arrangement is shown in Fig. 10.47. The middle horn positioned between transducer and welding horns is usually called a booster horn and is a convenient way to alter amplitude, an important variable in ultrasonic welding.

Care must be exercised in interconnecting horns so that the welding horn is not overstressed in operation, leading to fatigue failure. Some horn materials are better than others in their ability to sustain large motions without failure. High strength titanium alloys rank highest in this. Other suitable horn materials are Monel metal, stainless steel, and aluminium.

Fig. 10.45 **Typical welding horns**

Horn material must not dissipate acoustic energy. Copper, lead, nickel, and cast iron are not suitable horn materials. Horn designs described in Fig. 10.46 are suitable for welding only small pieces in DuPont engineering plastics.

In materials like polystyrene, parts with an overall size larger than the end area of a welding horn can be welded with "spot" horns, shown in Fig. 10.45.

For welding off parts of DuPont engineering plastics, larger than 25 mm in diameter, *the horn end plan should follow joint layout.* Bar and hollow horns, also shown in Fig. 10.47, are useful for welding larger rectangular and circular pieces respectively.

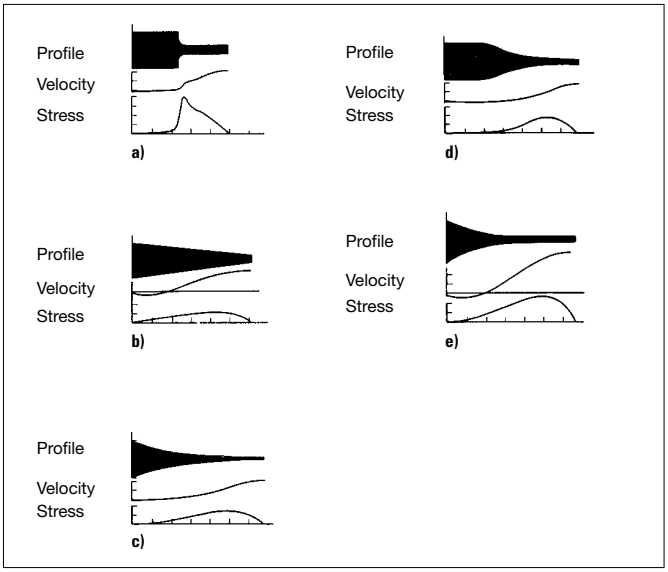

Fig. 10.46 **The profiles of horns for amplifying the output of transducers are as follows: *a)* Stepped. *b)* Conical. *c)* Exponential. *d)* Catenoidal. *e)* Fourier. The variations in particles velocity and stress along he horns are shown below each profile.**

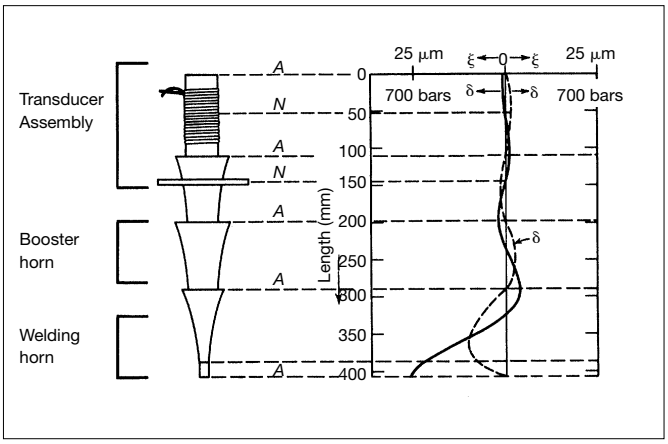

Fig. 10.47 **Tapered or stepped horns may be cascaded to provide increased amplification. The step discontinuities are at antinodal junctions. Measured values of the amplitude and stress at various points along the system are shown. Displacement nodes and antinodes are shown at N and A respectively.**

Further details of this important relationship between part design and horn design are discussed in greater detail under *Part Design.*

The width or diameter of bar or hollow horns is restricted in many cases to a dimension not greater than ¼ the wavelength of the sound in the horn material. As a lateral dimension of the horn exceeds this nominal limitation, lateral modes of vibration in the horn are excited. The horn's efficiency is thereby reduced. For titanium horns using standard design configurations, lateral dimensions of 65 to 75 mm are limiting. Larger horns may be constructed with slots interrupting lateral dimensions exceeding ¼ the wavelength.

Large parts can also be welded with several clustered horns. With one technique, the horns, each with a transducer, are energized simultaneously from individual power supplies or sequentially energized from one power supply. Another technique utilizes a cluster of horns attached to a single transducer which, when cycled, energizes the horns simultaneously.

For efficient welding, horns must resonate at a frequency very near the nominal 20 kHz operating frequency of the welding system. Thus, welding equipment manufacturers electronically tune welding horns, making subtle variations in horn dimensions to achieve optimum performance. While simple step horns in aluminium may be readily made in the laboratory for the purpose of evaluating prototype welds, such horns are subject to fatigue failure, are readily nicked and damaged, and frequently mark parts being welded. Thus, design and fabrication of more complex horns and horns using more sophisticated materials should be left to equipment manufacturers with experience and capabilities in analytical and empirical design of welding horns.

d) Holding Fixture

Fixtures for aligning parts and holding them stationary during welding are an important aspect of the welding equipment. Parts must be held in alignment with respect to the end of the horn so that uniform pressure between parts is maintained during welding. If the bottom part of the two parts to be welded is simply placed on the welder table, both parts may slide out from under the horn during welding. High frequency vibrations reduce the effect of nominal frictional forces which might otherwise hold pieces stationary. A typical fixture is shown in Fig. 10.48.

Most frequently used fixtures are machined or cast so that the fixture engages the lower part and holds it securely in the desired position. The question of whether a part must be held virtually immovable during welding has not been resolved to date through suitable, controlled experiments. Welding success has been observed in cases where parts were restrained but free to vibrate and when parts were rigidly clamped.

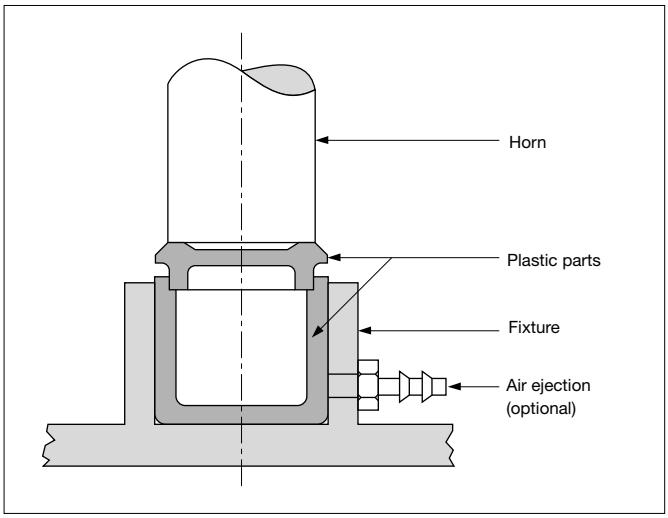

Fig. 10.48 **Support fixture**

The fixture should be rigid so that relative motion is developed between the tool and anvil, thus imparting the working action into the plastic material. This can be achieved by making the anvil short and massive or alternately by tuning the anvil to a quarter wavelength. Trouble can be encountered if the user inadvertently gets the anvil a half wavelength long so that it is resonant at or near 20 kHz. This can permit the anvil to move sympathetically with the horn and seriously limit energy input to the part. If it is slightly off 20 kHz, some annoying squeals and howls will be encoutered as the two frequencies begin to beat.

Flatness or thickness variations in some moulded parts, which might otherwise prevent consistent welding, may be accommodated by fixtures lined with elastomeric material. Rubber strips or cast and cured silicone rubber allow parts to align in fixtures under nominal static loads but act as rigid restraints under high frequency vibrations. A rubber lining may also help absorb random vibrations which often lead to cracking or melting of parts at places remote from the joint area. Another convenient device for establishing initial alignment of the parts and the horn is an adjustable table which can be tilted on two axes in a plane parallel to the end of the welding horn. Thin shim stock is frequently used in lieu of an adjustable table.

High production volume applications frequently require the use of automated part handling equipment and fixtures. For small pieces, vibrating hoppers and feeding troughs are used to feed parts onto an indexing table equipped with multiple fixtures for holding parts. Several welding operations are often performed at sequential positions around the indexing table.

Part Design Considerations

Part design is an important variable, frequently overlooked until tooling has been completed an attempts have been made to weld the firt moulded parts.

a) Joint Design

Perhaps, the most critical facet of part design for ultrasonic welding is joint design, particularly with materials which have a crystalline structure and a high melting point, such as DuPont engineering plastics. It is less critical when welding amorphous plastics. There are two basic types of joints, the shear joint and butt type joint.

Shear Joint

The shear joint is the preferred joint for ultrasonic welding. It was developed by engineers at DuPont's Plastics Technical Centre in Geneva in 1967, and has been used worldwide very successfully in many applications since that time. The basic shear joint with standard dimensions is shown in Fig. 10.49 and 10.50 before, during and after welding.

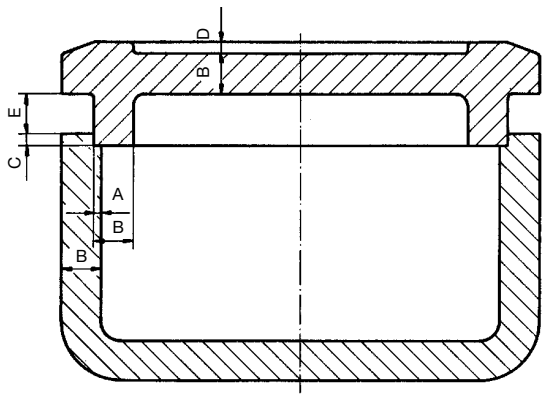

Dimension A	0,2 to 0,4 mm. External dimensions.
Dimension B	This is the general wall thickness.
Dimension C	0,5 to 0,8 mm. This recess is to ensure precise location of the lid.
Dimension D	This recess is optional and is generally recommended for ensuring good contact with the welding horn.
Dimension E	Depth of weld = 1,25 to 1,5 B for maximum joint strength.

Fig. 10.49 **Shear joint – dimensions**

Fig. 10.51 shows several variations of the basic joint. Initial contact is limited to a small area which is usually a recess or step in either one of the parts for alignment. Welding is accomplished by first melting the contacting surfaces; then, as the parts telescope together, they continue to melt along the vertical walls. The smearing action of the two melt surfaces eliminates leaks and voids, making this the best joint for strong, hermetic seals.

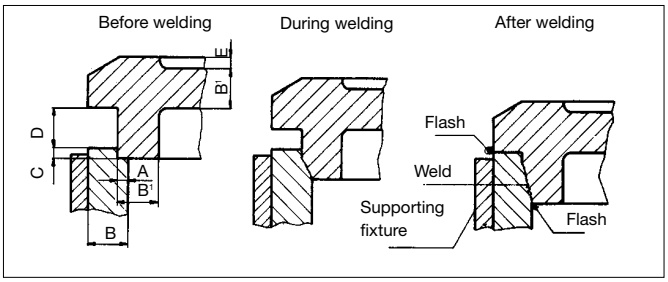

Fig. 10.50 **Shear joint – Welding sequence**

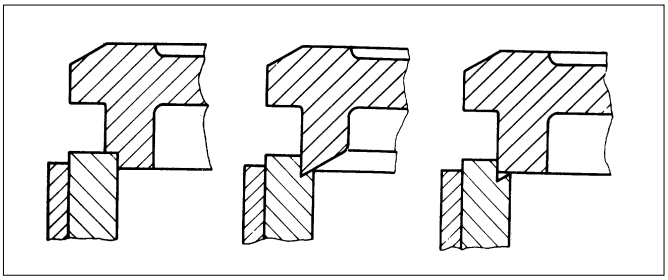

Fig. 10.51 **Shear joint – Variations**

The shear joint has the lowest energy requirement and the shortest welding time of all the joints. This is due to the small initial contact area and the uniform progression of the weld as the plastic melts and the parts telescope together. Heat generated at the joint is retained until vibrations cease because, during the telescoping and smearing action, the melted plastic is not exposed to air, which would cool it too rapidly.

Fig. 10.52 is a graph which shows typical weld results using the shear joint. It is a plot of weld time vs. depth of weld and weld strength. Depth and strength are directly proportional.

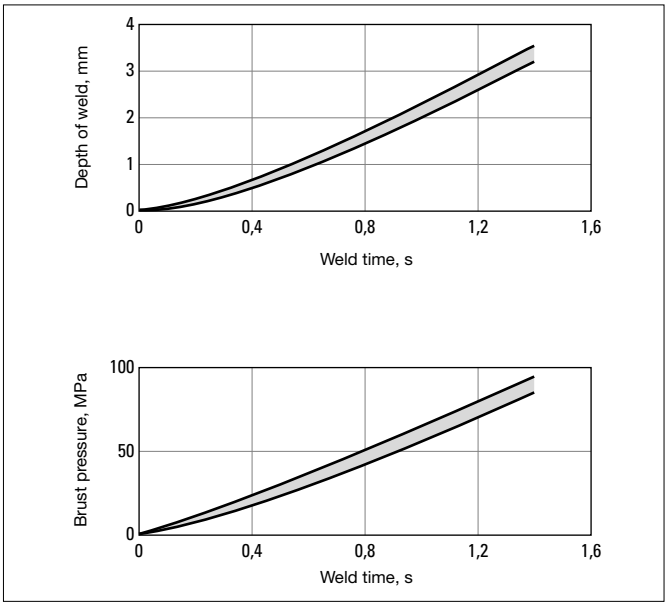

Fig. 10.52 **Shear joint – Typical performance**

Weld strength is therefore determined by the depth of the telescoped section, which is a function of the weld time and part design. Joints can be made stronger than the adjacent walls by designing the depth of telescoping 1,25 to 1,5 times the wall thickness to accomodate minor variations in the moulded parts (see E on Fig. 10.49).

Several important aspects of the shear joint must be considered; the top part should be as shallow as possible, in effect, just a lid. The walls of the bottom section must be supported at the joint by a holding fixture which conforms closely to the outside configuration of the part in order to avoid expansion under the welding pressure.

Non continuous or inferior welds result if the upper part slips to one side or off the lower part, or if the stepped contact area is too small. Therefore, the fit between the two parts should be as close as possible before welding, but not tight. Modifications to the joint, such as those shown in Fig. 10.53, should be considered for large parts because of dimensional variations, or for parts where the top piece is deep and flexible. The horn must contact the joint at the flange (nearfield weld).

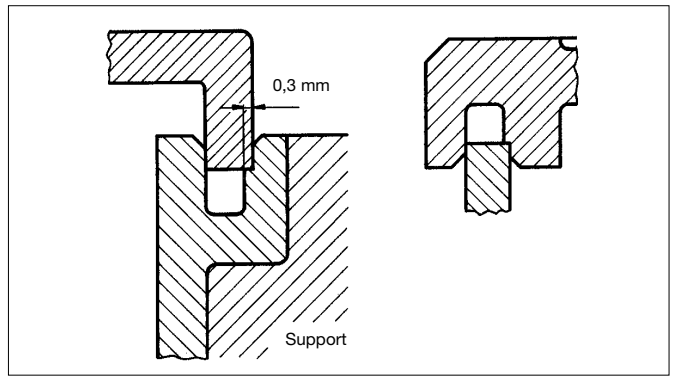

Fig. 10.53 **Shear joint – Modifications for large parts**

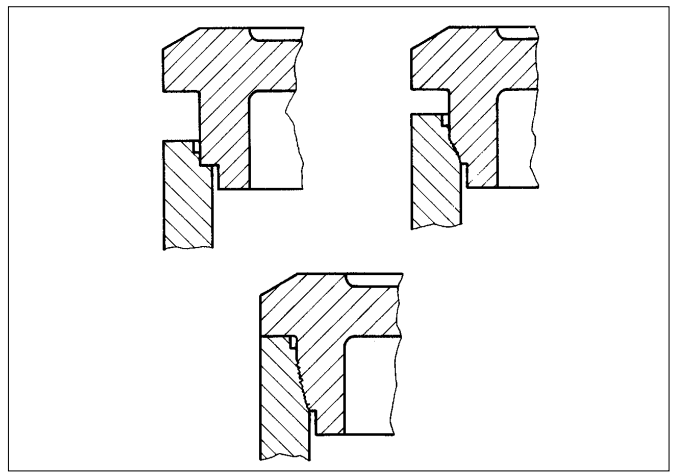

Fig. 10.54 **Shear joint – Flash traps**

Allowance should be made in the design of the joint for the flow of molten material displaced during welding. When flash cannot be tolerated for aesthetic or functional reasons, a trap similar to the ones shown in Fig. 10.54 can be designed into the joint.

Butt Joint

The second basic type of joint is the butt joint which is shown in Fig. 10.55, 10.56 and 10.57, with variations. Of these, the tongue-in-groove provides the highest mechanical strength. Although the butt joint is quite simple to design, it is extremely difficult to produce strong joints or hermetic seals in the crystalline resins.

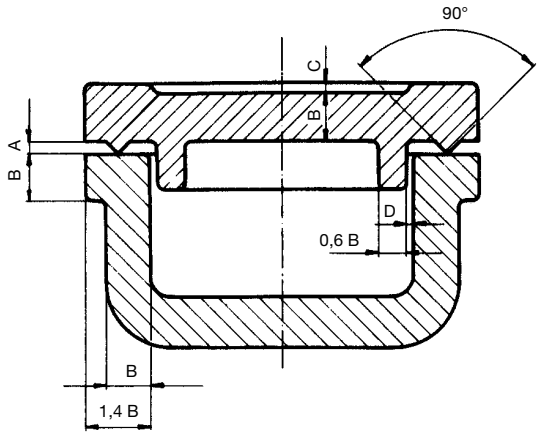

Dimension A 0,4 mm for B dimensions from 1,5 to 3 mm and proportionally larger or smaller for other wall thicknesses.

Dimension B General wall thickness.

Dimension C Optional recess to insure good contact with welding horn.

Dimension D Clearance per side 0,05 to 0,15 mm.

Fig. 10.55 **Butt joint with energy director**

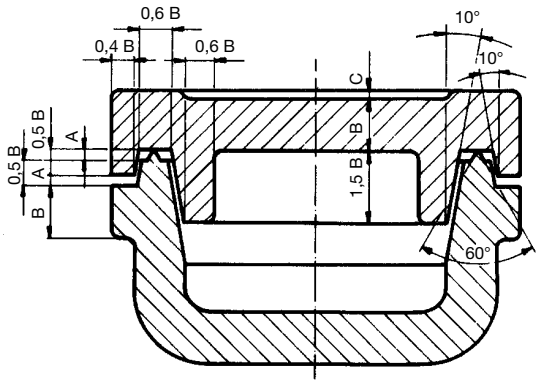

Dimension A 0,4 mm for B dimensions from 1,5 to 3 mm and proportionally larger or smaller for other wall thicknesses.

Dimension B General wall thickness.

Dimension C Optional recess to insure good contact with welding horn.

Fig. 10.56 **Tongue-in-groove**

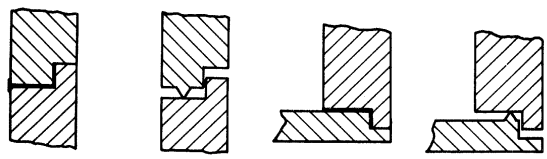

Fig. 10.57 **Butt joint – Variations**

Strong joints can be achieved with amorphous resins, however, it may be difficult to obtain hermetic seals in complex parts.

The main feature of the butt joints is a "V" shaped bead or "energy director" on one of the two mating surfaces which concentrates the energy and limits initial contact to a very small area for rapid heating and melting. Once the narrow area begins to soften and melt, impedance drops and further melting occurs at a faster rate. The plastic in the energy director melts first and flows across the surfaces to be joined. Amorphous plastics have a wide, poorly defined softening temperature range rather than a sharp melting point. When the plastic flows, sufficient heat is retained in the melt to produce good fusion over the entire width of the joint.

DELRIN®, ZYTEL®, MINLON® and RYNITE® are crystalline resins with no softening before melting and a sharp melting point and behave different than amorphous resins. When the energy director melts and flows across the surfaces, the melt being exposed to air can crystallize before sufficient heat is generated to weld the full width of the joint. It is necessary, therefore, to melt the entire joint surface before significant strength can be obtained. (In the case of ZYTEL®, exposure of the high temperature melt to air can cause oxidative degradation which results in brittle welds). This phase of the weld cycle is very long as can be seen in Fig. 10.58 and 10.59, which are graphs showing typical weld sequences for parts of DELRIN® and ZYTEL® using the basic butt joint.

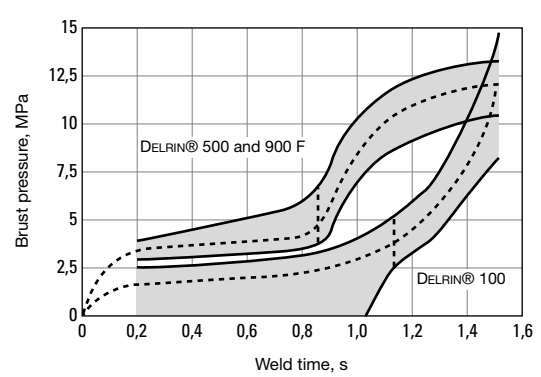

Fig. 10.58 **Butt joint – Typical performance, burst pressure vs. weld time**

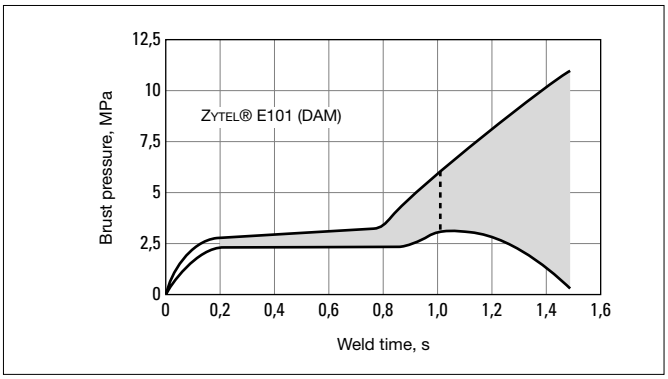

Fig. 10.59 **Butt joint – Typical performance, burst pressure vs. weld time**

The dotted lines indicate the weld time at which an objectionable amount of flash occurs. This flash is a limiting factor in most applications. Beyond this time, results are extremely variable, especially with ZYTEL®.

b) General Part Design

The influence of overall part design on ultrasonic welding has not been fully determined. However, some generalizations can be made about certain aspects of part design and their effect on the success of welding.

Determining the location at which the welding horn will contact a part is a very important aspect of part design. Some of the considerations for location have already been mentioned in the discussion of the various joint designs.

There are two methods of welding, far field and near field as illustrated in Fig. 10.60. They refer to the point of horn contact relative to the distance from the joint. Best welding results for all plastics are obtained with near field weling. Therefore, wherever possible, parts should be designed for horn contact directly above and as close to the joint as possible.

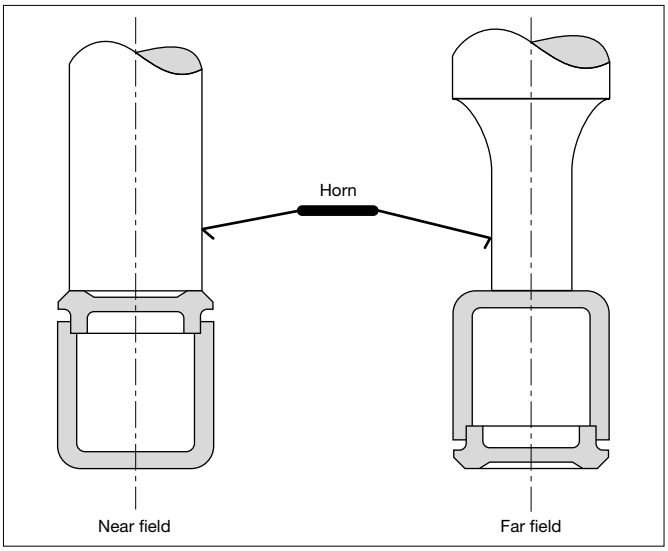

Fig. 10.60 **Near field and far field welding**

In far field welding, the horn contacts the upper part at a distance from the joint and relies on the plastic to transmit the vibrations to the joint. Rigid, amorphous plastics transmit the vibrations to the joint. Rigid, amorphous plastics transmit the ultrasonic energy very well. Although rigid plastics such as DELRIN®, ZYTEL®, MINLON® and RYNITE® have a more crystalline structure and can absorb vibrations without creating appreciable heat rather than transmitting them, they are more difficult to weld by the far field technique.

Soft plastics such as polyethylene can only be welded by the near field technique. Because they have a high acoustic damping factor, they strongly attenuate the ultrasonic vibrations upon entry into the material. If the joint is too far from the horn, the energy is not transmitted to the joint and the plastic melts at the interface with the horn.

Plastics are poor transmitters of shear waves. This fact makes welding more difficult when the geometry of the upper piece is complex. Vibrations are partially attenuated or dissipated at bends, angles or discontinuities such as holes in the structure between the horn and the joint. These features should be avoided.

To maximize transmission of vibrations, parts should be designed with a flat contacting surface for the welding horn. This surface should be as broad as possible and continous around the joint area. Interruptions in contact between the horn and the part may result in weld interruptions.

Fillets are desirable for all parts designed for ultrasonic welding. Since the entire structure of both halves being welded is subjected to vibrations, a very high level of stress occurs at sharp internal corners. This frequently results in fracture or sporadic melting. Fillet radii consistent with good moulding and structural design practice are suggested.

Because of pervasive vibrations, care is suggested when welding parts with unsupported appendages and large spans. Vibrations may be severe enough to literally disintegrate a cantilevered spring, for example, extending from the wall section of a part. Measures, such as rubber lined fixtures or a rubber damper attached to the welding horn, may be taken to dampen such vibrations. This phenomenon can be used to advantage: experiments have shown that moulded parts can be degated quickly and with a smooth finish by applying ultrasonic energy to the runners.

Ultrasonic Welding Variables

The major ultrasonic welding variables are *weld time, hold time, pressure and amplitude of vibration*. Suggested procedures for optimizing them are found under b) on page 117.

a) Weld Time

Weld time is the period during which vibrations are applied. The correct weld time for each application is determined by trial and error. It is important to avoid overwelding. In addition to creating excessive flash which may require trimming, this can degrade the quality of the weld and lead to leaks in parts requiring a hermetic seal. The horn can mar the surface. Also, as was shown in Fig. 10.44 melting and fracture of portions of the parts away from the joint area may occur at longer weld times, especially at holes, weld lines, and sharp corners in moulded parts.

b) Hold time

Hold time is a nominal period after welding during which parts are held together and allowed to solidify under pressure without vibrations. It is not a critical variable in most applications; 0,3 to 0,5 seconds are usually sufficient for most applications unless an internal load tends to disassemble the welded parts, such as a coil-spring compressed prior to welding.

c) Amplitude of Vibrations

The physical amplitude of vibrations applied to the parts being welded is an important process variable. High amplitude of vibration of appr. 0,10 to 0,15 mm peak-to-peak is necessary to achieve efficient and rapid energy input into DuPont engineering plastics. Because the basic transducer delivers its power at high force and low amplitude, the amplitude must be stepped up before reaching the tool tip. The horn design usually includes amplitude transformation inherent in tapering or stepping its profile down to a small diameter. Where the part geometry requires a large or complex tip shape, this amplification may not be possible in the horn. In this case, amplification can be conveniently achieved in most commercial systems by use of an intermediate tuned section called a booster horn. Boosters up to 2,5:1 amplification are commercially available. Negative boosters to 0,4:1 for horns having too high an amplitude for a given application are also available. Boosters which provide a 2:1 or 2,5:1 amplification are typically required, except for small parts which permit the use of high gain horns.

Increasing amplitude improves weld quality in parts designed with shear joints. With butt type joints, weld quality is increased and weld time is reduced with increasing amplitude.

d) Pressure

Weld pressure provides the static force necessary to ‘‘couple’’ the welding horn to the plastic parts so that vibrations may be introduced into them. This same static load insures that parts are held together as the melted material in the joint solidifies during the ‘‘hold’’ portion of the welding cycle.

Determination of optimum pressure is essential for good welding. If the pressure is too low, the equipment is inefficient leading to unnecessarily long weld cycles. If it is too high in relation to the horn tip amplitude, it can overload and stall the horn and dampen the vibrations.

The overall amplitude gain provided by the booster and the horn is analogous to the load matching provided by the gear ratio between an automobile engine and its rear wheels. In ultrasonic welding, low pressure is required with high amplitude and high pressure is required with low amplitude.

This is shown in the graph in Fig. 10.61. It is a plot of weld efficiency vs. weld pressure for three levels of amplitude obtained by use of the boosters indicated. There are several methods for measuring welding efficiency.

These are fully described in the next chapter. In addition to showing the relationship of amplitude and pressure, another very important effect is shown. As amplitude increases, the range of acceptable pressure decreases. Therefore, finding the optimum pressure is most critical when the amplitude is high.

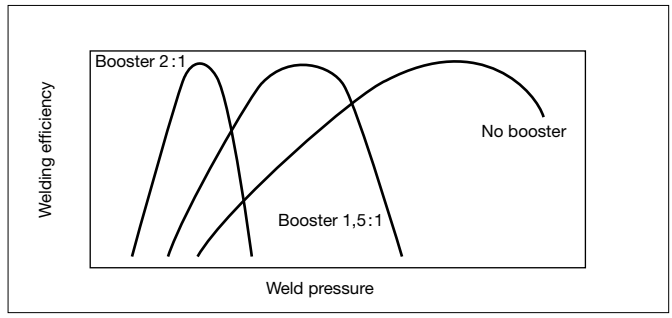

Fig. 10.61 **Welding efficiency vs. amplitude and pressure**

Guide to Equipment Operation

Proper operation of welding equipment is critical to the success of ultrasonic welding. The following comments are suggested as a guide to the use of ultrasonic welding machines with parts of DuPont engineering plastics.

a) Initial Equipment Setup

Horn Installation

The transducer, welding horn, and booster horn (if needed) must be tightly bolted together to insure efficient transmission of vibrations from the transducer to the parts. The end surfaces of the transducer output and horns are usually flat to within several microns. However, to insure efficient coupling heavy silicone grease or a thin brass or copper washer cur from 0,05 or 0,08 mm shin stock is used between horns. Long spanner wrenches are used to tighten horns. Care must be exercised when tightening horns, so as not to turn the transducer output end. Such turning may pull the electrical leads from the transducer.

After installation of the horns, some welders require manual tuning of the electronic power supply. Small, but important adjustments to the frequency of power supply are made to exactly match its frequency to that of the horns. Some welders accomplish this tuning automatically. The operations manual for a particular welder will indicate required tuning procedures, if any. This procedure must be repeated each time a horn or booster is changed.

If the amplitude of vibration of a horn is not known, it may be determined quite simply with either a microscope or a dial indicator. A booster should not be used if only the amplitude of the welding horn is to be determined. A 100 × microscope with a calibrated reticule in the eye piece is suitable for making optical measurements. When magnified, the machined surface of the horn appears as bright and dark peaks and valleys respectively. When the horn is vibrating, a peak will blur out into a streak and the length of the streak is the peak-to-peak amplitude or total up and down excursion of the end of the horn.

A machinist's dial indicator may be used to measure ''amplitude'' or half the total movement of the horn. The dial indicator is positioned with an indicator tip contacting the bottom surface of the horn and in an attitude such that the tip moves in a vertical direction. The indicator is set to zero with the horn stationary. When the horn is vibrating, it will deflect the indicator tip downward.

Since the indicator cannot respond to the horns rapid movement, the indicator tip will stay in this downward position, accurately measuring the half cycle movement of the horn. These measurements are made when the horn is not welding the parts. Even though the amplitude of vibration is reduced somewhat under peak welding pressure, the ''unloaded'' amplitude is still a useful measure of this important welding parameter.

Part & Fixture Alignment

The parts, fixture, and welding horn must be physically aligned so that the pressure and vibrations are uniformly and repeatedly applied. As was shown in Fig. 10.41, the welding transducer is attached to a stand. The transducer assembly slides up and down in relation to the stand and is powered by a pneumatic cylinder. By reducing pressure, the transducer assembly may be easily moved by hand. With the parts placed in a suitable holding fixture, the horn is pulled down by hand while the fixture is positioned and secured.

Alignment of the parts and fixture in a plane parallel to the end plane of the horn may be achieved in several ways. In one, a sheet of fresh carbon paper is placed with the carbon side against a sheet of plain paper and both are positioned between the welding horn and parts. ''Weld-time'' is set to the minimum possible time. When the horn vibrates against parts, an impression is formed on the plain paper, and the variation of the ''darkness'' of impression indicates pressure variation. This method can be used with both shear and butt type joints.

Parallel alignment is less critical with the shear joint than with butt type joints. Because of the depth of weld and the smearing action, minor variations do not significantly affect the strength or sealing characteristics of the weld. For this same reason, a higher degree of warpage in parts can be tolerated with this joint. Parallel alignment is of major importance when dimensions of the assembled parts are critical.

Another technique can be used for butt type joints. First, the welder is operated with weld-time set to produce a light flash at the joint between the parts. The fixture may then be shimmed or adjusted so that flash is produced uniformly around the joint.

All welding machines have a means for adjusting the transducer assembly height above the work table. Height must be adjusted so that the downward stroke of the transducer assembly is less than the maximum stroke capability of the welding machines. Otherwise, insufficient or erratic pressure will be developed during welding.

Some welding machines require the setting of a trip switch, once horns have been intalled and the parts and fixture are aligned. A trip switch closes the circuit which applies power to the transducer and simultaneously starts the ''weld-time'' timer. The trip switch should be set so that the welding machine is turned on slightly before the horn makes contact with the parts. Otherwise, the system may stall when trying to start against full pressure. Most recently manufactured welding machines are turned on by a pressure sensitive switch and do not require switch height adjustment.

b) Optimizing Welding Cycle

Amplitude, welding pressure, and weld time must be adjusted and optimized for each application. Each variable is studied independently by welding several groups of parts at a number of settings with all other vriables held constant. The results of each weld are observed, measured, and recorded, and the optimum value is determined.

There are several measures of weld quality of welding efficiency which can be used to optimize welding conditions. These include measurement of depth of weld (with shear joint), physical tests on welded parts such as burst strength or break strength, and observation of power supply load or efficiency meters. The measure selected will depend on the end-use requirements of the parts.

For maximum accuracy physical tests should be considered. This is especially true for pressurized containers such as gas lighter tanks and aerosol containers where burst pressure tests are essential. These tests are time and labour consuming and should be used only when necessary.

The depth of the weld (or height of the welded parts) can be measured when welding with the shear joint. This a less expensive and time-consuming method which provides sufficient accuracy for optimizing conditions. Excellent correlation has been established between depth of the weld and weld strength.

Most power supplies are equipped with power meters which give an indication of the efficiency of the welding. Observing the meter level during welding is a simple technique, but is the least accurate.

Pressure and Amplitude

The first step in optimizing conditions is to select a welding horn and booster or coupling bar combination which gives the necessary amplitude (peak-to-peak). It is helpful but not essential to know the specific amplitude of the welding horn or the combination of horns.

To establish optimum conditions of pressure and amplitude, weld time should be held constant. For shear joints, a relatively short time is suggested (0,03 to 0,6 seconds). A long weld time is suggested for butt-type joints. Hold time should also be held constant. It is not a critical variable. The same value can be used for all setup and production welding.

A number of parts are welded at several weld pressure settings, for example, 0,15 – 0,20 – 0,25 – 0,30 – 0,35 MPa. The values of welding efficiency (meter, depth, or physical test) can be plotted as shown in Fig. 10.61 to establish the optimum pressure for the selected amplitude. In actuality, the plot will not be a line but a narrow band which represents a range of values. The optimum pressure is indicated by the highest and most narrowly defined portion of the data. To further pinpoint optimum pressure, it may be desirable to weld additional samples in the range of this pressure level.

For example, if the peak appears to be between 0,15 to 0,25 MPa samples should be welded at 0,18 and 0,22 MPa.

Optimum amplitude is determined by repeating the above procedure using amplitude greater and less than the initial amplitude. This is most easily accomplished by changing boosters. If there appears to be little or no difference among the peaks of serveral amplitudes (as may be the case, with the shear joint when the depth of weld is measured), use the highest amplitude.

Weld time

The correct weld time is the last setting to be determined. Using the selected amplitude and optimum pressure for that amplitude, parts are welded at weld time settings higher or lower than the initial value until the required depth of weld, joint strength, or appearance is achieved.

In selecting welding conditions, appearance of parts is frequently important. In many cases, high strength cannot be achieved without formation of visible external weld flash unless flash traps are designed into the joint (refer section on Joint Designs). Flash trimming may be necessary in some applications.

The procedure for optimizing welding conditions may be considerably shortened on the basis of experience with previous welding applications.

Welding Performance

a) Influence of Material Properties

Properties of plastics influence success in ultrasonic welding. Often properties which dictate the selection of a material for a particular application are properties which make welding more difficult, such as high melt temperature or crystallinity. The stiffness of the material being welded is an important property which may be influenced by environmental temperature and moisture. Of greater importance are influences of pigments, mould release agents, glass fillers, and reinforcement fibres.

DELRIN® Acetal Resin

DELRIN® is a highly crystalline plastic with a high, sharp melting point, high strength, hardness and stiffness at elevated temperatures. Of both ‘‘flow’’ grades of DELRIN®, part of DELRIN® 500 weld easier than parts of the higher melt viscosity DELRIN® 100. The difference is very slight with the shear joint but more pronounced with the butt type joints. DELRIN® 570, a glass filled composition, may also be ultrasonically welded. Lubricants and pigments negatively influence welding as noted below. Atmospheric moisture does not appear to influence the welding of parts of DELRIN®.

ZYTEL® Nylon Resin

ZYTEL® nylon resins are also crystalline plastics with high melting points. Variations in welding performance have been observed among the families of ZYTEL® resins.

Parts moulded of ZYTEL® E101 and other basic 66 nylons can be welded with the same degree of ease as parts of DELRIN®. An additional requirement, however, is that parts must be in a "dry-as-moulded" condition. The influence of moisture on the welding of ZYTEL® parts is discussed in greater detail below.

Parts moulded of ZYTEL® 408 and other modified 66 nylons may be ultrasonically welded but with slightly greater difficulty than ZYTEL® E101. The slightly lower stiffness of these resins may cause some problems with marring and formation of flash under the welding horn.

Due to low dry-as-moulded stiffness, parts moulded of ZYTEL® 151 and other 612 nylons can be welded but with slightly more difficulty than ZYTEL® E101. These resins are noted for their very low moisture absorption. Therefore, in all but the most critical applications it is not necessary to keep the parts dry before welding.

Parts of glass reinforced ZYTEL® nylon can also be ultrasonically welded; sometimes with greater ease than the unreinforced material. Resins in the ZYTEL® nylon 79G, 70G series may be welded with weld strengths equal only to that of the base unreinforced material because no glass reinforcement occurs at the weld. For this reason, if the strenght of the joint weld is required to equal that of the reinforced resin, the joint area must be increased in relation to the wall thickness. This can be easily done with the shear joint.

Of the glass reinforced ZYTEL® resins, ZYTEL® 79G13 is the most difficult to weld. At the 13% glass reinforcement level, excessive marring and flashing under the welding horn may still occur.

MINLON® engineering thermoplastic resin

The comments made before about glass reinforced ZYTEL® are valid for MINLON®, matrix of the resin being the same. MINLON® contains 40% mineral filler which allows an outstanding welding speed (30–50% faster than DELRIN® 500). However we have noticed a certain sensitivity of moulded parts to sharp angles, badly cut gates or any other weak areas which can break under ultrasound and particular attention must be paid to the design of the part, more especially for MINLON® 10B140.

RYNITE® thermoplastic polyester resin

Because of its high stiffness this glass-reinforced polyester resin is easy to weld. It is preferable to always use a step-joint for such a resin which is often used in very demanding applications (sometimes even at high temperatures). An over-welding time may generate burned material in the sonotrode area.

b) Effect of Moisture on ZYTEL®

Nylon resins absorb somewhat more moisture from the air after moulding than most other plastics. When released from joint surfaces during welding, moisture causes poor weld quality. For best results, parts of ZYTEL® should either be ultrasonically welded immediately after moulding or kept in a dry-as-moulded condition prior to welding. Exposure of 1 or 2 days to 50% relative humidity at 23° C is sufficient to degrade weld quality by 50% or more as shown in Fig. 10.62. Welding parts at longer than normal weld times may offset this loss of weld quality, but often at the expense of heavy weld flash and marring under the welding horn. As was shown in Fig. 10.44, the part temperature near the horn approaches that at the joint during welding, and therefore lengthening weld cycles may cause severe problems.

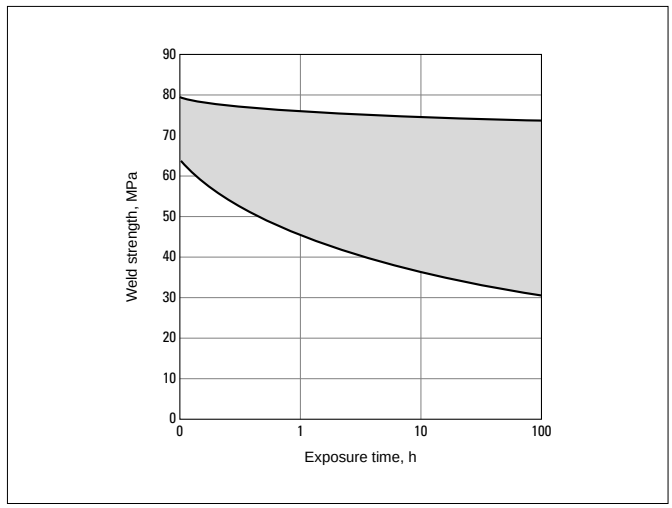

Fig. 10.62 **Effect on weld strength vs. time of exposure (prior to welding) to air at 23° C, 50% R.H. for ZYTEL® E101 NC10 nylon**

Parts may be kept dry for periods up to several weeks by sealing them in polyethylene bags immediately after moulding. For longer periods, greater protective measures must be taken such as the use of jars, cans, or heat sealable moisture barrier bags. Parts which have absorbed moisture may be dried prior to welding in a drying oven. Procedures for this are described in ZYTEL® design and moulding manuals.

c) Pigments, Lubricants, Mould Release Agents

The influence of pigment systems on ultrasonic welding can be considerable. Most pigments are inorganic compounds and are typically used in concentrations ranging from 0,5% to 2%. With welding equipment set at conditions which produce quality welds in unpigmented parts, the quality of welds in pigmented parts may be markedly lower. Poor quality is reflected in welds of low strength and greater brittleness.

The mechanism by which pigments influence welding has not been identified to date. The presence of pigments appears to influence the means of heat generation at the joint. Often lower weld quality may be offset by welding pigmented parts at longer weld times than anticipated for unpigmented parts. Weld times may have to be increased by 50% or more. However, these longer weld times may produce undesirable effects such as the formation of excess weld flash and marring unter the welding horns.

When ultrasonic welding is contemplated for assembling parts which must be moulded in pigmented material, test welding of moulding prototypes is recommended to establish the feasibility of the application. In many commercial applications, weld strength and toughness are not critical requirements. Use of dye colouring systems, which do not significantly effect ultrasonic welding, may offer an alternative solution.

The above comments apply also to the welding of materials with externally or internally compounded lubricants and mould release agents. Relatively small quantities of such materials appear to adversely affect the means of heat generation in the joint during welding. While the increase in weld time may offset some of this influence, the consequent problems mentioned above may occur. If spray-on mould release agents are used in moulding of otherwise unlubricated moulding material, these parts should be thoroughly cleaned prior to welding.

Other Ultrasonic Joining Techniques

a) Ultrasonic Heading

Ultrasonic equipment can be used for heading or staking to tightly join parts of DuPont engineering plastics to parts of dissimilar materials, usually metal. A stud on the plastic part protrudes through a hole in the second part. A specifically contoured horn contacts and melts the top of the stud and forms a rivet-like head. This produces a tight joint because there is no elastic recovery as occurs with cold heading.

Suggested horn and part design are shown in Fig. 10.63. The volume of displaced plastic equals the cavity of the horn. Many variations of the design are possible to fit particular applications.

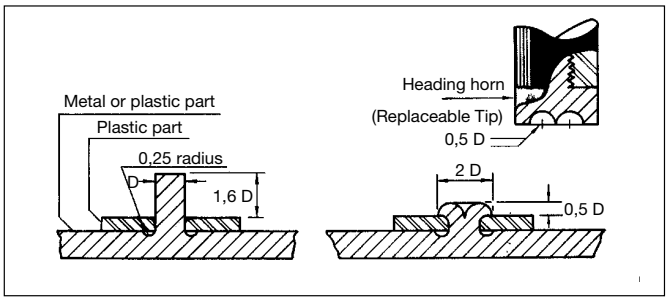

Fig. 10.63 **Ultrasonic heading**

Where possible, an undercut radius at the root of the stud and a radius on the hole of the part to be attached should be included. This increases the strength and toughness of the headed assembly. A thinner head profile than that shown is not suggested.

b) Stud Welding

Ultrasonic stud welding, a variation of the ‘‘shear joint’’ technique, can be used to join plastic parts at a single point or numerous locations.

In many applications requiring permanent assembly, a continuous weld is not required. Frequently, the size and complexity of the parts seriously limits attachment points or weld location. With dissimilar materials, this type of assembly is generally accomplished by either cold heading, ultrasonic heading or by the use of rivets or screws. When similar plastics are used, ultrasonic stud welding can perform the function with greater ease and economy. The power requirement is low, because of the small weld area, and the welding cycle is short, almost always less than half a second.

Among the many applications where ultrasonic stud welding might be used are clock frames, timers, electromechanical devices, electrical connectors and pump impellers.

Fig. 10.64 shows the basic stud weld joint before, during, and after welding. Welding occurs along the circumference of the stud. The strenght of the weld is a function of the stud diameter and the depht of the weld.
Maximum strength in tension is achieved when the depth of the weld equals half the diameter. In this case, the weld is stronger than the stud.

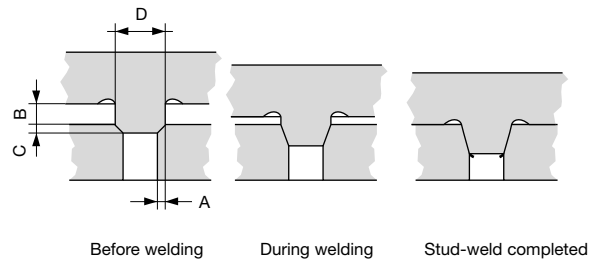

Dimension A	0,25 to 0,4 mm for D up to 13 mm
Dimension B	Depth of weld B = 0,5 D for maximum strength (stud to break before failure)
Dimension C	0,4 mm minimum lead-in.
Dimension D	Stud diameter.

Fig. 10.64 **Ultrasonic stud welding**

The radial interference, A, must be uniform and should generally be 0,25 to 0,4 mm for studs having a diameter of 13 mm or less. Tests show that greater interference does not increase joint strength but does increase weld time.

For example, studs with a diameter of 5 mm with 0,4 mm interference require four times the weld cycles of studs with 0,25 mm interference welded to the same depth. The hole should be at sufficient distance from the edge to prevent breakout.

In the joint, the recess can be on the end of the stud or in the mouth of the hole, as shown in several of the examples. When using the latter, a small chamfern can be used for rapid alignment.

To reduce stress concentration during welding and in use, an ample fillet radius should be incorporated at the base of the stud. Recessing the fillet below the surface serves as a flash trap which allows flush contact of the parts.

Other ways in which the stud weld can be used are illustrated in Fig. 10.65. A third piece of a dissimilar material can be locked in place as in view *A*. View *B* shows separate moulded rivets in lieu of metal self-tapping screws or rivets which, unlike metal fasteners, produce a relatively stress-free assembly.

Fig. 10.66A shows a variation which can be used where appearance is important or where an uninterrupted surface is required. The stud is welded into a boss. The outside diameter of the boss should be no less than 2-times the stud diameter. When welding into a blind hole, it may be necessary to provide an outlet for air. Two methods are possible, a center hole through the stud, or a small, narrow slot in the interior wall of the boss.

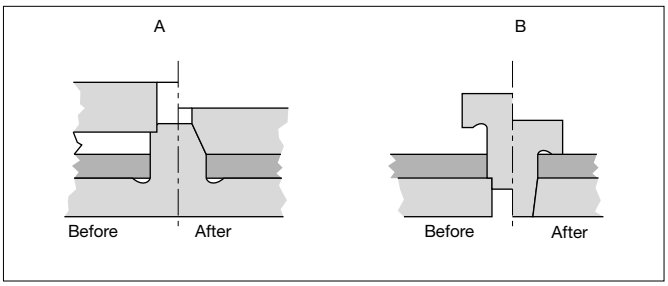

Fig. 10.65 **Stud welding – Variations**

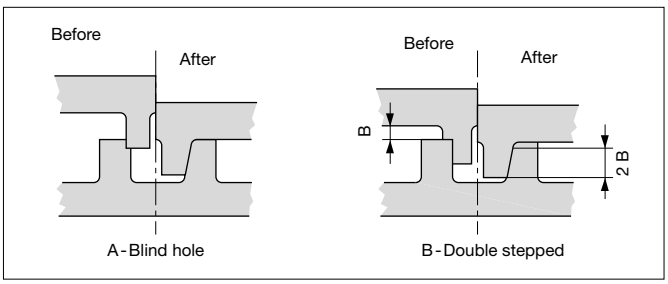

Fig. 10.66 **Stud welding – Variations**

When the amount of relative movement during welding between two parts being assembled is limited such as when locating gears or other internal components between the parts, a double stepped stud weld as in Fig. 10.66B should be considered. This reduces the movement by 50% while the area and strength of the weld remain the same.

This variation is also useful when welding plugs into thin walls (1,5 mm) as seen in Fig. 10.67. With the standard stud joint, the requirement lead-in reduces the available area and strength.

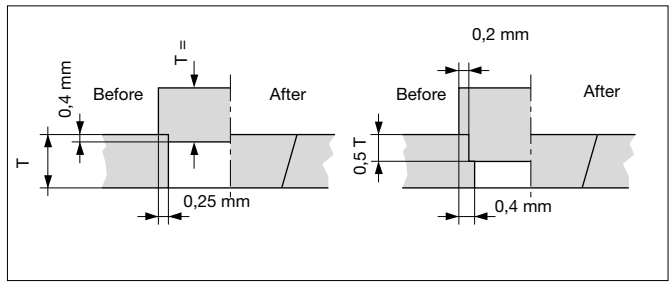

Fig. 10.67 **Stud welding – Plugs in thin-wall parts**

Standard horns with no special tip configuration (as needed for ultrasonic heading) are used. High amplitude horns or horn and booster combinations are generally required. Best results are obtained when the horn contacts the part directly over the stud and on the side closest to the joint. When welding a number of pins in a single part, one horn can often be used. If the studs are widely spaced (more than 75 mm between the largest distance of the studs) small individual horns energized simultaneously must generally be used. Several welding systems which can accomplish this are described earlier in the report.

c) Ultrasonic Inserting

Metal parts can be ultrasonically inserted into parts of DuPont engineering plastics as an alternative to moulded-in or pressed-in inserts. Several advantages over moulded-in inserts are:

Elimination of wear and change to moulds,

Elimination of preheating and hand-loading of inserts,

Reduced moulding cycle,

Less critical insert dimensional tolerances,

Greatly reduced boss stress.

The inserts can be ultrasonically inserted into a moulded part or the moulded part can be assembled over the insert as seen in Fig. 10.68. There are several varieties of ultrasonic inserts commercially available, all very similar in design principle. Pressure and ultrasonic vibration of the inserts melts the plastic at the metal-plastic interface and drives the insert into a moulded or drilled hole.

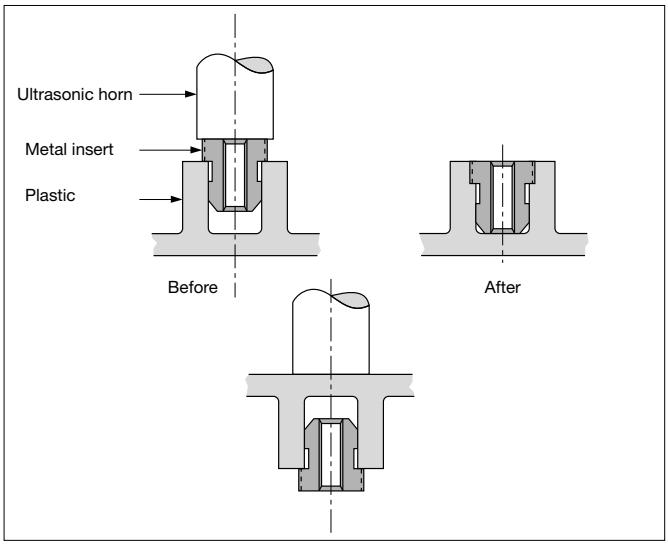

Fig. 10.68 **Ultrasonic inserting**

The plastic, melted and displaced by the large diameters of the inserts flows into one or more recesses, solidifies, and locks the insert in place. Flats, notches, or axial serrations are included in the inserts to prevent rotation due to applied torsional loads. The volume of the displaced material should be equal to or slightly more than the volume of free space corresponding to the groove and the serrations of the insert.

Safety

Ultrasonic welding can be a safe process. However, certain precautions should be taken to insure such safety.

a) Ultrasonic welding machines should be equipped with dual actuating switches, thereby insuring that the operators' hands remain clear of the welding horn. Stop or safety override switches should also be installed so that welding machines can be stopped at any time during its cycle or downward travel.

b) Vibration welding horns should not be squeezed or grabbed, nor should the unit be brought down by hand under pneumatic cylinder load. Light skin burns may result from the former, and severe burns as well as mechanical pinching will result from the latter.

c) Welding machines operate at 20 000 cycles per second, above normal audibility for most people. However, some people may be affected by this frequency of vibrations and by lower frequency vibrations generated in the stand and parts being welded.

An enclosure with absorption lining similar to that shown in Fig. 10.69, may be used to reduce the noise and other possible effects of the vibrations. The enclosure should be complete and not just a barrier. If this is not possible, ear protectors should be worn by all production line operators and by others working near the welding equipment.

Laboratory technicians working occasionally with ultrasonic welding machines should wear ear protection if sounds from the welding machine produce discomfort. Some welding horns, shaped very much like bells, may produce intense sound vibrations when improperly operated. These vibrations may cause nausea, dizziness, or potentially permanent ear damage.

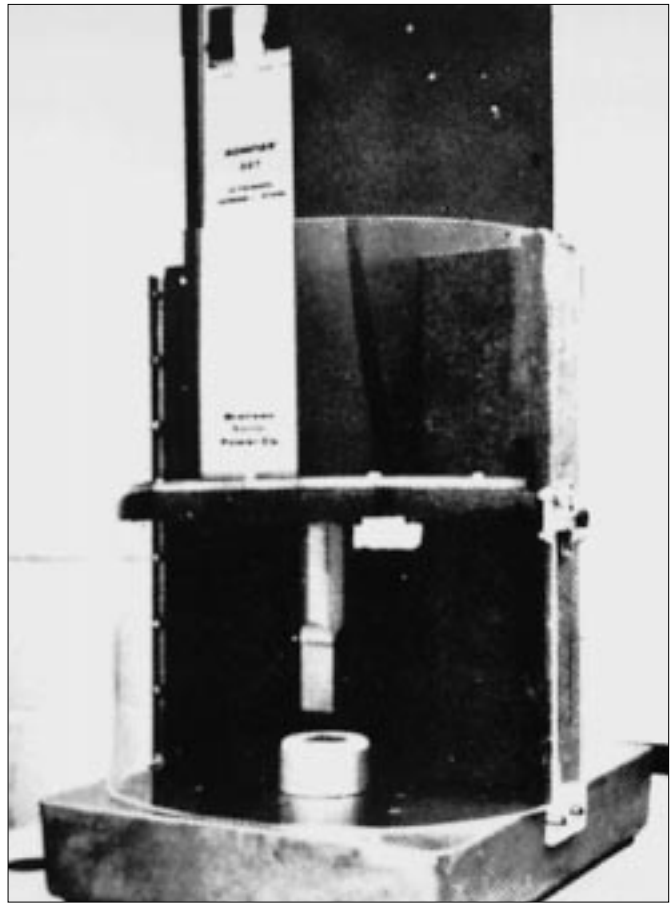

Fig. 10.69 **Noise shield**

Vibration Welding

Introduction

Vibration welding as such has been known for many years and applied in some special fields. The DuPont Company, however, has further developed and improved the technique to the extent at which it can be used in the broad field of engineering plastic materials. In addition, DuPont was the first to produce adequate prototypes of equipment to demonstrate the feasibility and usefulness of this method for joining industrial plastic parts.

Vibration welding is a simple technique and does not require sophisticated mechanical or electrical equipment. The welding cycle can be divided into the following steps:

1. The two parts are put into suitably shaped jigs on the machine.
2. The jigs move towards each other to bring the joint surfaces into contact under continuous pressure.
3. Vibrations, generated either by a gear box or by an electric magnet, are transmitted to the jigs and through them to the joint surfaces. The motions of the two parts take place in opposite directions, thus creating a relative velocity at the weld surfaces. As a result of friction, temperature rises immediately, reaching the melting point of the plastic, usually in less than a second.
4. After a pre-set time, an electrical control device stops the vibrations whilst pressure on the joint is maintained. Simultaneously the parts are brought into the correct position relative to each other.
5. Pressure is maintained for a few seconds to allow the melt to freeze. Then the jigs open and the welded parts are ejected.

Basic Principles

The various weld methods for joining parts in thermoplastic materials differ essentially in the way heat is built up on the joint surface.

The presently known procedures can be split into two basically different groups:

1. The heat required to reach the melting temperature is supplied by an outside source. This is the case with: hot plate welding, induction welding and hot air welding.
2. The necessary heat is generated directly on the joint surfaces by means of friction. The best known methods using this procedure are spinwelding and ultrasonic welding. They have the obvious advantage that the melted resin is never exposed to open air, in this way preventing decomposition or oxidation which, for some plastics, must be avoided.

   Spinwelding, however, is limited to circular shaped parts which, in addition, do not require positioning. If the two items are to be joined in an exact position relative to each other spinwelding equipment becomes quite costly because there are no simple mechanical means to fulfill this requirement.

Vibration welding belongs to the second group since it produces heat by means of friction on the two joint surfaces. Unlike the spinwelding procedure, vibration welding is not limited to circular parts. It can be applied to almost any shape provided that the parts are designed to permit free vibrations within a given amplitude.

Definition of Motion Centre

The centre around which two parts vibrate can be located:

a) inside the joint area;

b) outside the joint area;

c) at an infinite distance, in which case the motion becomes linear.

Based on this, two distinct variations can be defined: *Angular and linear welding.*

a) *Motion centre inside the joint area*
   All parts having a perfectly circular weld joint would logically vibrate around their own centre as shown in Fig. 10.71A. Such parts can be provided with a V-shaped weld joint as described in chapter ‘‘Circular Parts’’. All parts having a non-circular shape must of course be provided with flat joint surfaces. If the weld area has an irregular shape, as for instance shown in Fig. 10.71B, it can still vibrate around an internal centre. The latter would, however, be choosen in a place which produces the least possible difference in circumferential velocity.
   From experimentation it has been found that if the ratio of X/Y exceeds ~1,5, the motion centre must be placed outside the joint.

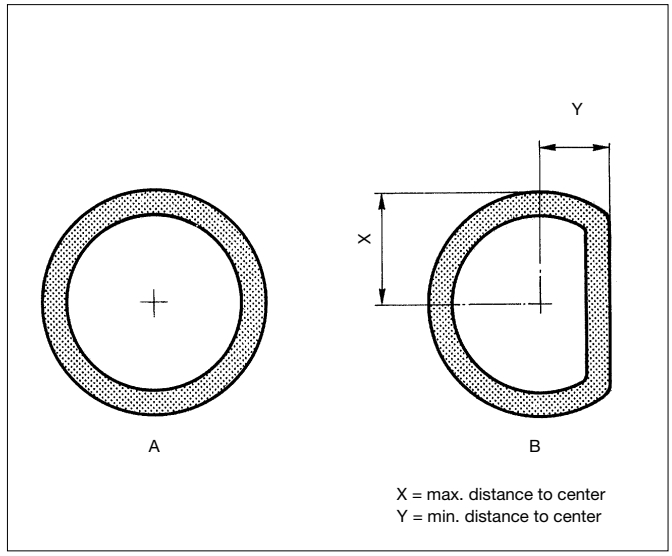

Fig. 10.71 **Weld Joint Shapes**

Parts having a rectangular weld area similar to that shown in Fig. 10.72A can also vibrate around their own centre provided the above mentioned ratio is not over ~1,5 to 1,0.

With a shape like that shown in Fig. 10.72B, the motion centre would have to be located externally in order to obtain similar weld velocities all over the joint.

b) *Motion centre outside the joint area*
In cases where the above described conditions are not fulfilled, parts must be placed far enough from the motion centre to obtain again a ratio of X / Y <1,5 as shown in Fig. 10.73A. This arrangement permits simultaneous welding of two or more parts. It is equally possible to weld simultaneously items having different sizes and shapes. They must, however, be arranged in the vibrating jig symmetrically in order to obtain the same surface pressure on all joints, as shown in Fig. 10.73B.

c) *Linear welding*
Parts which, for reasons of shape or size, do not fit into an angular jig may be welded by means of linear vibrations. This method is especially appropriate for large size non-circular parts above a length of 100-150 mm. It is, however, also possible to weld several parts simultaneously provided they can be fitted into the vibrating plates.

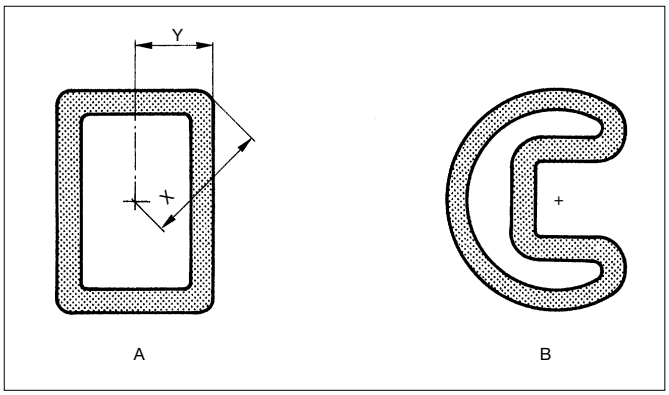

Fig. 10.72 **Location of Motion Centre**

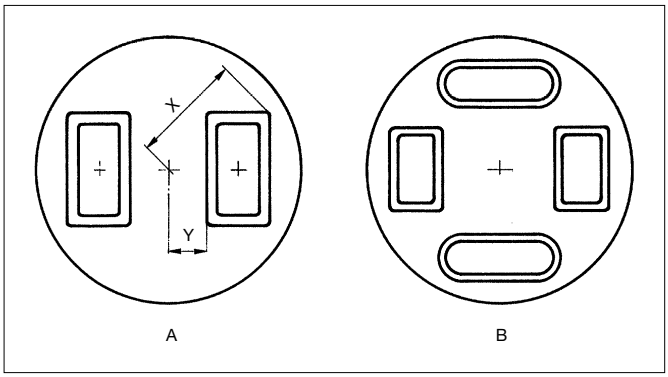

Fig. 10.73 **Simultaneous Welding of Multiple parts**

Typical Arrangements for Producing Vibrations

Although vibrations can be generated by means of alternating current magnets, all available machines so far have been equipped with mechanical vibration generators.

Fig. 10.74 shows schematically the function of a linear welding machine as was first perfected by DuPont. The vibrations are generated by two eccentrics *a* rotating around centre *b* and transmitted to jigs *c* by rods *d*. The lower jig slides in two ball bearing rails allowing free lengthwise motion. The upper jig is pressed down by four pneumatic operated levers *e*.

It is essential to synchronize mechanically the motions of the latter in order to obtain a perfect parallelism of the parts to be welded.

At the end of the weld cycle, motion transmission is disengaged whereupon both parts are brought into the final position and pressure is maintained for a short time to allow freezing of the melted resin.

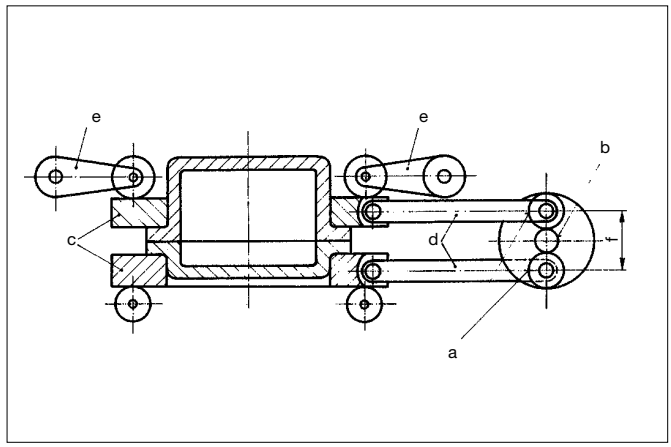

Fig. 10.74 **Principle of Linear Welding Machine**

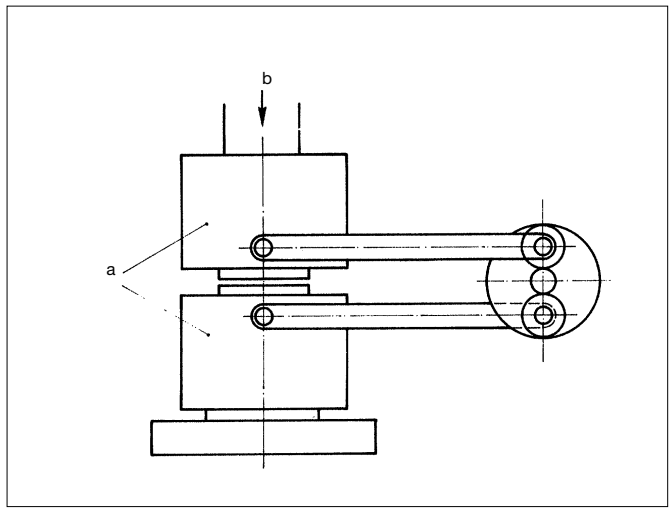

Fig. 10.75 **Principle of Angular Welding Machine**

The same basic device is used for an angular welding machine as indicated in Fig. 10.75. In this case, vibrations are transmitted to the upper and lower jigs *a* rotating on ball bearings. The upper jig is mounted directly onto the piston rod *b* to provide pressure.

Theoretically, the same weld result could be obtained with one part stationary and the other vibrating at twice the frequency. Experience has proven, however, that this method is unsatisfactory for various reasons. As illustrated in Fig. 10.74 and 10.75, the considerable acceleration and deceleration forces cancel out, provided that the weight of the upper jig plus the plastic part is equal to the weight of the lower jig plus the plastic part. (In the case of angular welding the two moments of inertia must be identical to provide equal and opposite inertia forces.)

If one part is only vibrated at twice the frequency, the acceleration and deceleration forces are four times higher and would have to be compensated for by means of an additional and adjustable device. The whole gear box would therefore be much heavier and more expensive for a machine having the same capacity. In addition, it has been shown empirically that it is easier to obtain a good, tight joint if both parts are vibrating.

Welding Conditions

In order to reach the melting point of the material, two parts must be pressed together and vibrated at a certain frequency and amplitude. These conditions can be defined as a PV value, where P is the specific joint pressure in MPa and V the surface velocity in m/s.

The two eccentrics generate a sinusoidal velocity curve as shown in Fig. 10.76. Since they move in opposite directions, the maximum relative velocity of one part against the other is 2 W. The resulting relative velocity is therefore 1,27 times the maximum value W.

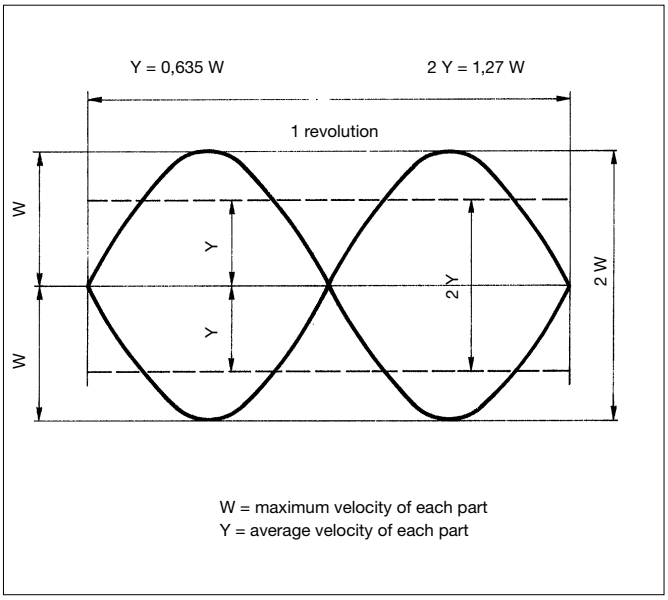

Fig. 10.76

Example: A machine welding acetal according to Fig. 10.74 has an eccentric distance *f* of 3 mm and runs at a speed of 5000 rpm. The circumferential velocity is therefore:

$$V = f \times \pi \times n = \frac{0{,}003\ m \times \pi \times 5000}{60} = \ 0{,}78\ m/s$$

This equals the maximum velocity W in Fig. 10.76. The average relative velocity of one part against the other would then be:

$1{,}27 \times 0{,}78 = 1\ m/s$

At a specific joint pressure of 3 MPa, the resulting PV value becomes:

$3 \times 1 = 3\ MPa \times m/s$

As the generated heat is also a function of the coefficient of friction, the above PV value must be related to the materials being welded. Glass reinforced polyamide for instance has been welded successfully at a PV value of 1,3. It would therefore appear that a machine which is sup-posed to weld various materials and part sizes should be provided with adjustable pressure, speed and amplitude. Once the best working conditions are determined for a given part, the production machine would, however, not require any adjustments, except for the pressure.

Weld time is a product of velocity, pressure and amplitude. Experience has shown, however, that above a certain pressure, joint strength tends to decrease, possibly due to squeezing out of the molten resin. On the other hand, there are certain limits with regard to the resulting mechanical load on the gear box. Thus, doubling the speed produces four times higher acceleration forces of the vibrating masses.

Extensive tests have proven that a frequency of about 100 Hz is very convenient for small and medium size parts whereas larger, heavy parts are welded at a frequency of 70-80 Hz.

However, successful joints for big parts have also been designed, using frequencies up to 250 Hz, see also Fig. 10.79 D.

On linear machines, the distance of the two eccentrics (*f* in Fig. 10.74) should be adjusted in order to obtain a relative motion of about 0,9 × joint width, as shown in Fig. 10.77.

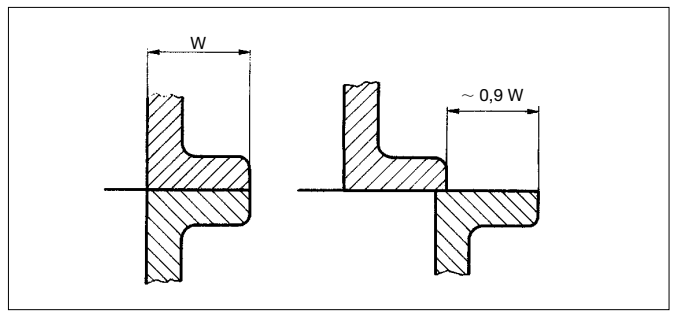

Fig. 10.77 **Relative Motion – Joint width**

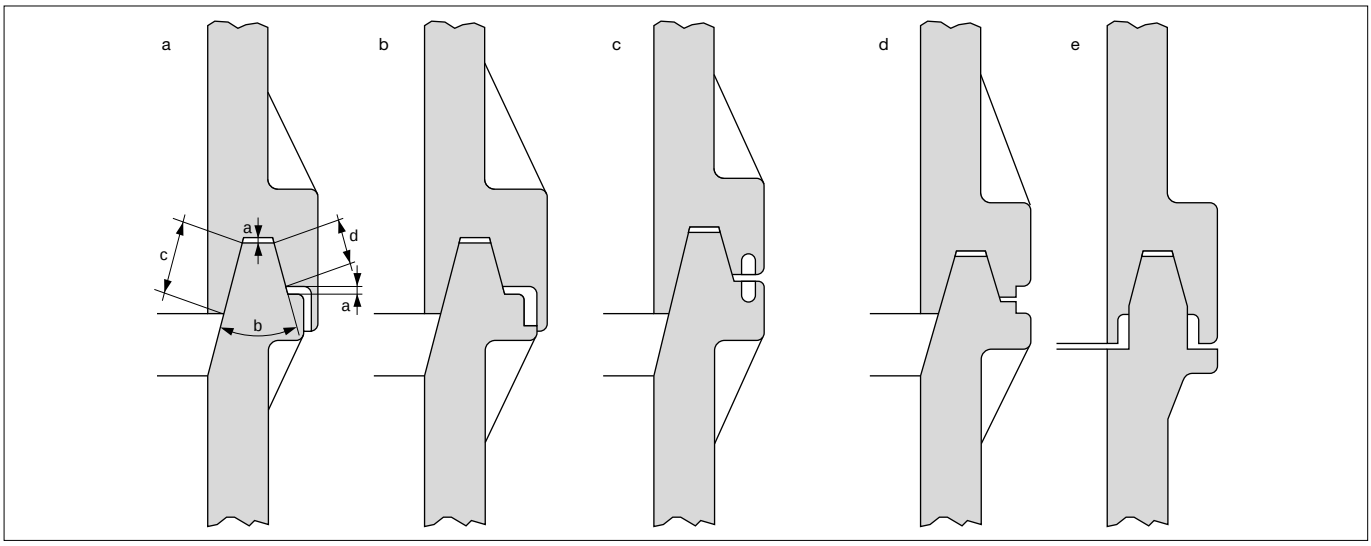

Fig. 10.78 **Joint Design – Circular Parts**

The specific surface pressure giving the highest joint strength must be determined by testing. As a basic rule it can be said that a machine should be capable of producing appr. 4 MPa of pressure on the surface to be welded.

Joint Design

a) Circular parts

Circular parts should always be provided with a V-shaped joint as used for spinwelding. Not only does such a design permit perfect alignment of the two halves but the welded surface can be increased, thus reaching the strength of the wall section. During welding operations a certain amount of flash builds up on both sides of the joint. For certain applications this must be avoided either for aesthetic reasons or because it may be a source of trouble for internal mechanical parts. In such cases, joints should be provided with flash traps.

In order to transmit vibrations to the joint area, with the least possible loss, the plastic part must be held firmly in the jig. It is often advisable to provide the joint with 6 or 8 driving ribs, especially for thin wall vessels in soft materials.

A typical joint design with an external flash trap and driving ribs directly located on the shoulder is shown in Fig. 10.78*a*. There are a few basic requirements to be kept in mind:

– Before welding, the flat areas should be separated by gap *c*, which is appr. 0,1× the wall thickness.
– The angle *b* should not be less than 30° in order to avoid a self locking effect.
– The welded length *c* + *d* must be at least 2,5× the wall thickness, depending on the desired strength. As some plastics are more difficult to weld than others, this value should be increased accordingly.

Fig. 10.78*b* and 10.78*c* show other possible arrangements for external flash traps.

On parts for which an aesthetic appearance is not essential a simple groove like that in Fig. 10.78d is often sufficient. It does not cover the flash but keeps it within the external diameter.

If both internal and external flash traps are required they can be designed for as shown in Fig. 10.78*e*.

b) Non circular parts

Non circular parts, whether they are welded on angular or linear machines can be provided with flat joints as shown in Fig. 10.79A. The joint width *W* should be at least twice the wall thickness, depending again on strength requirements and the plastic used. Strength does not increase significantly above a ratio W/T = 2,5–3,0, due to unequal stress distribution (see also Fig. 10.81).

Square and rectangular shaped parts, especially with thin walls or moulded in soft plastics are not stiff enough to transmit vibrations without loss. They must therefore have a joint as shown in Fig. 10.79B with a groove around the whole circumference. This groove fits onto a bead on the jig *a* to prevent the walls from collapsing inwards. It is most important to support the joint on both surfaces *b* and *c* to achieve perfect weld pressure distribution.

A possible way of adapting flash traps on butt joints is shown in Fig. 10.79C. Gap *a* must be adjusted to obtain a complete closure of the two outer lips after welding. This design reduces the effective weld surface and may need wider joints for a given strength.

Another joint design, with flash trap, is shown in Fig. 10.79 D. This joint has been used successfully in vibration welding of covers for air-intake manifolds at frequencies of up to 250 Hz, with amplitudes of 1,2 mm.

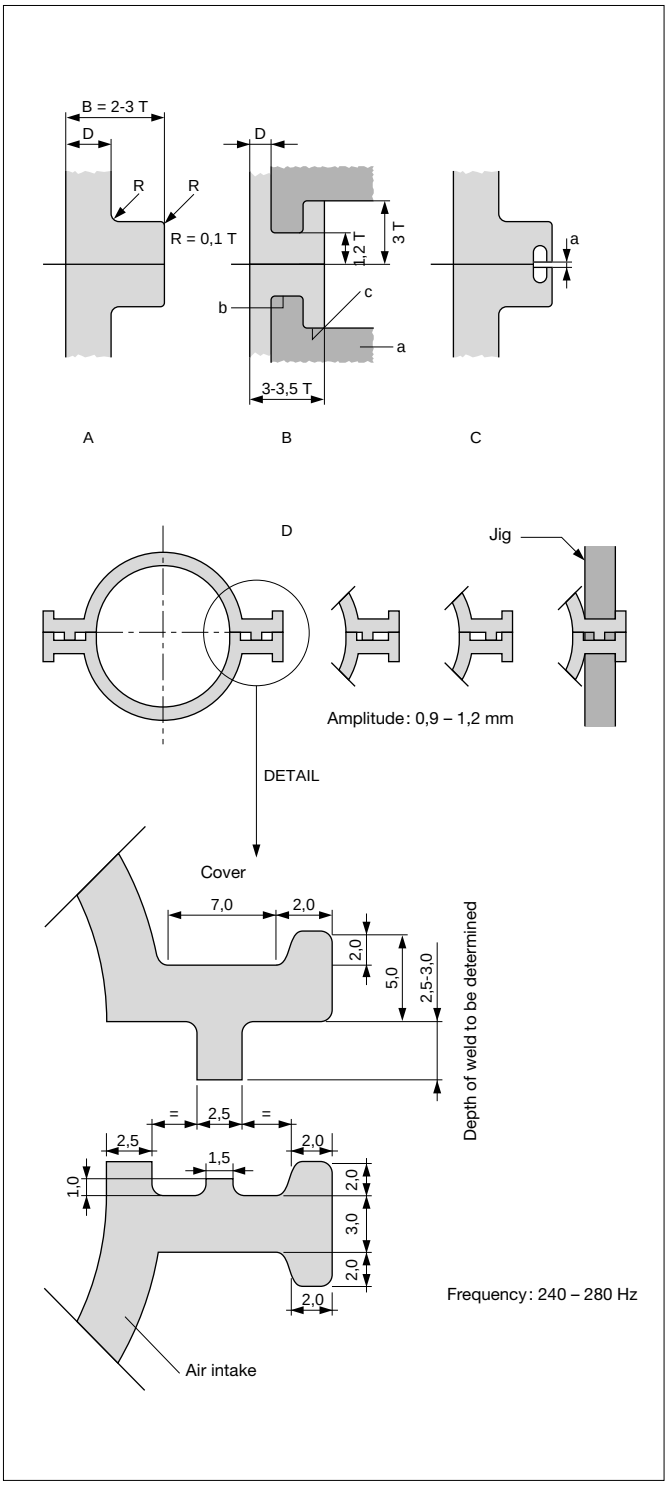

Fig. 10.79 **Joint Design – Non circular Parts**

Test Results on Angular Welded Butt Joints

The rectangular box shown in Fig. 10.80 was used for extensive pressure tests in various DuPont materials. The burst pressure of any vessel is influenced by three main factors:

– overall design
– material weldability
– joint design.

The results obtained and described below should therefore be applied carefully to parts having different shapes and functions. The same part moulded in different plastics will show quite different behaviour. Whereas in some cases the weld may be the weakest spot, in other engineering plastic resins it may prove to be stronger than the part itself.

Joint Strength versus Welded Surface

Fig. 10.81 shows the tensile strength as a function of joint width, obtained on the vessel shown in Fig. 10.80. A linear strength increase can be observed up to a ratio W/T of appr. 2,5. Above this value the curve tends to flatten out and increasing the width does not further improve strength.

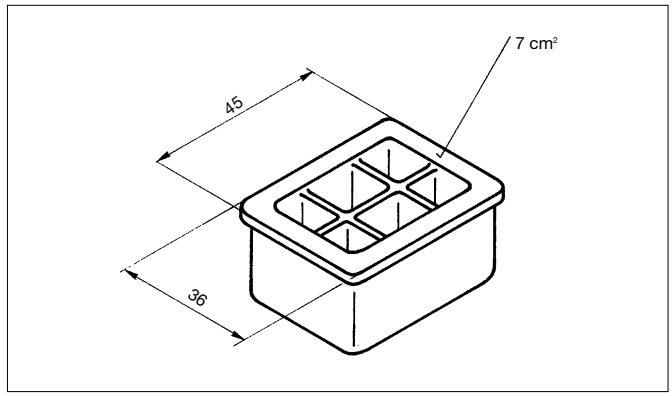

Fig. 10.80 **Burst Pressure Test Piece**

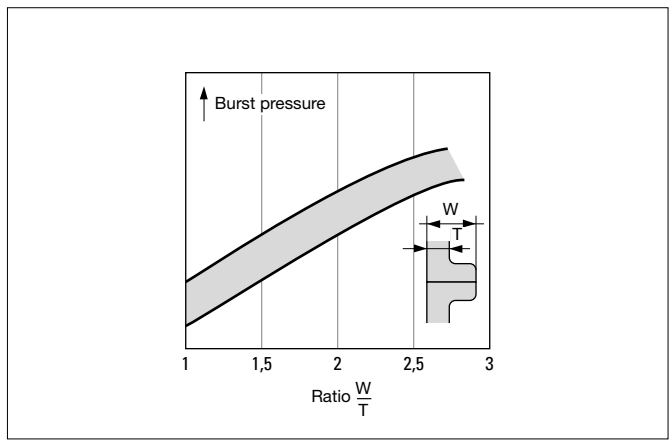

Fig. 10.81 **Joint Strength versus Joint Size**

Joint Strength versus Specific Weld Pressure

As already mentioned, the appropriate specific weld pressure should be determined for each plastic material by trials. For DELRIN® 500 for instance, it was found to be about 3,3 MPa as plotted on the curve in Fig. 10.82. It appears that too high a pressure reduces joint strength as well as too low a pressure.

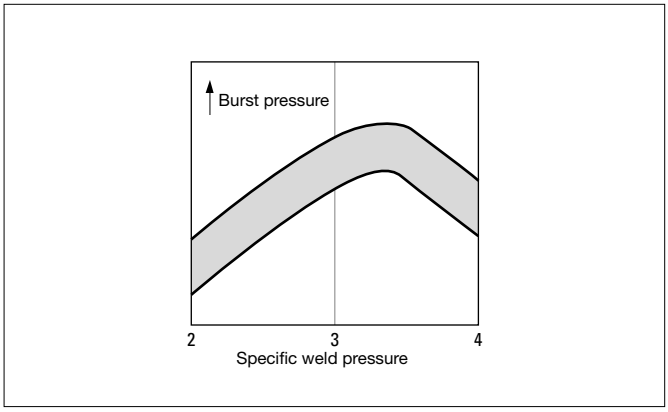

Fig. 10.82 **Specific Weld Pressure Influences Joint Strength**

All grades of DELRIN® are suitable for vibration welding. DELRIN® 500 F gives the best results, whereas DELRIN® 100 is somewhat inferior. Weld joints on parts in DELRIN® 100 are usually the weakest area due to the high elongation of this resin. This was also the case for the test vessel shown in Fig. 10.80. The same part moulded in DELRIN® glass filled resin does not break at the joint but in a corner, because of the lower elongation. It must also be kept in mind that coloured compositions have a lower weld strength than the same grade in natural colour. This applies to all polymers. Pigment loadings have a slight adverse effect on properties. Even though the average strength values differ somewhat from one grade to another, it is surprising to notice that the upper limit of about 14 MPa tensile strength is the same for most grades.

Vibration welding is equally suitable for all grades of ZYTEL® nylon resins. It allows many new and attractive applications for which no other weld procedure would be applicable. The automotive industry in particular requires various non-circular vessels and containers in the cooling circuit as well as for emission control filters.

No special care has to be taken concerning water absorption before welding, provided that the parts are stored at a relative humidity no higher than 50%.

Butt joints of parts in unreinforced polyamide are usually stronger than the part itself. Fillers and glass fibres reduce joint strength depending on their quality. Thus 30% glass fibres cause a reduction of up to 50% in strength. Parts in this resin must be designed very carefully.

Design Examples

Fig. 10.83. A typical centrifugal pump design with an angular welded spiral housing in DELRIN®.

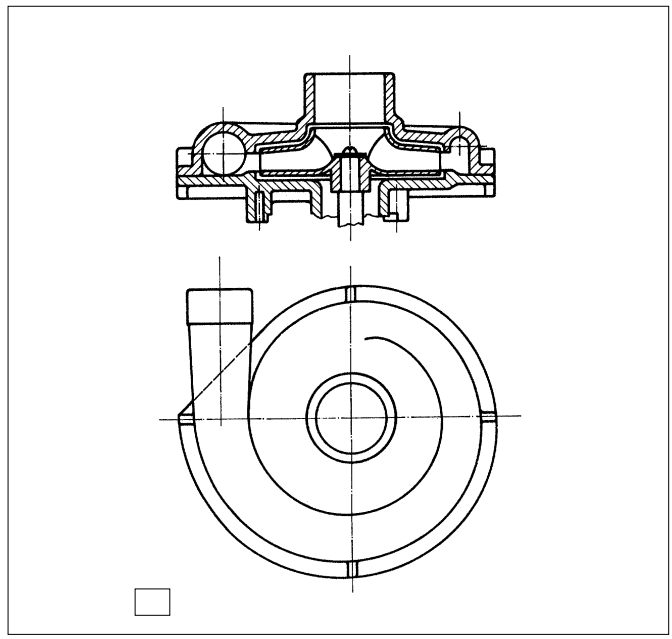

Fig. 10.83 **Centrifugal pump**

Fig. 10.84. An automotive tank in ZYTEL® nylon 66 resin. The joint is provided with a flash trap to avoid any post deflashing operation.

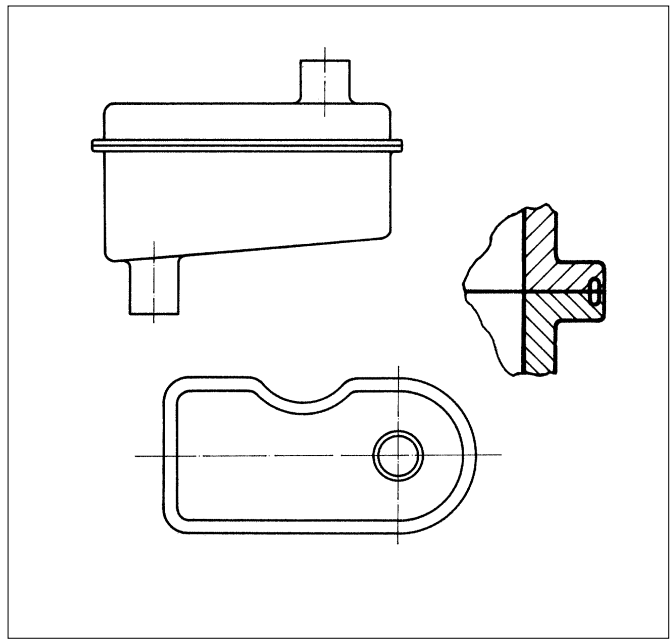

Fig. 10.84 **Automotive tank**

Fig. 10.85. A linear welded motor bicycle petrol tank in ZYTEL®. The groove in the joint collects flash, then a PVC profile is snapped over the flange. This is one solution which effectively hides the whole weld joint.

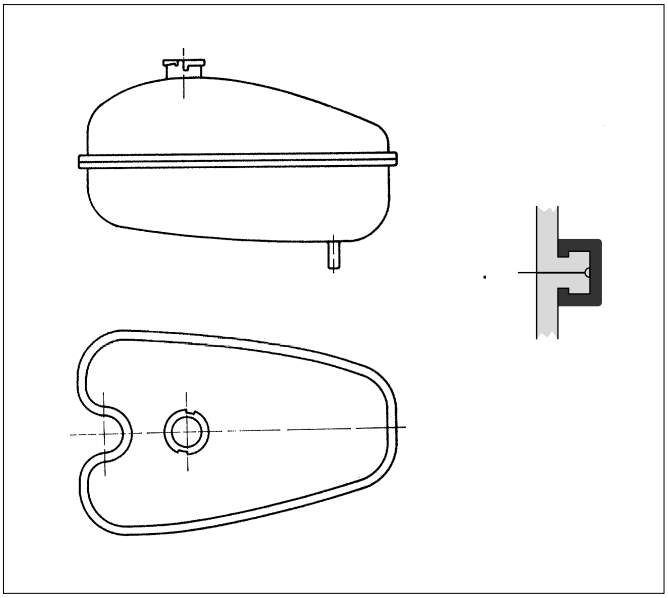

Fig. 10.85 **Motor bicycle pertrol tank**

Fig. 10.86a. An angular welded, square shaped gasoline filter housing in ZYTEL®. The joint is provided with a groove to retain the thin walls in the jigs, thus preventing them from collapsing during the welding operation.

Fig. 10.86b. An angular welded container in ZYTEL®. Body and cover house connections must be oriented in the given position. A classic spinweld joint with an external flash trap is used for this vibration welding technique.

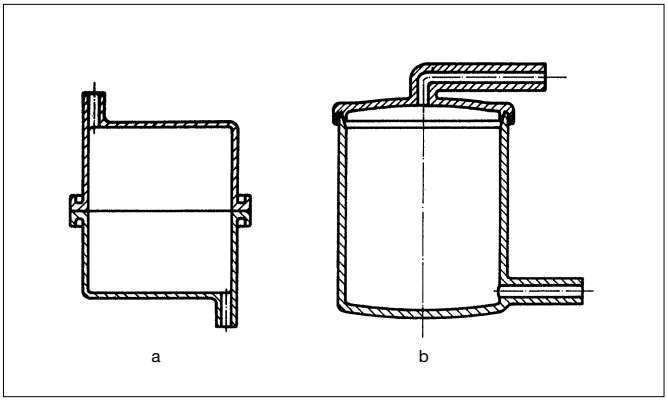

Fig. 10.86 **Angular Welded Parts**

Fig. 10.87. Rubber diaphragm assemblies can also be welded by angular vibrations. Steps must be taken, however, to prevent the upper part from transmitting vibrations directly to the rubber. This can be achieved by means of a very thin nylon washer onto the diaphragm, the use of graphite powder or a drop of oil. The solenoid valve in ZYTEL® glass fibre reinforced nylon resin shown here has a burst pressure of 8-9 MPa. A significant advantage over self tapping screw assemblies lies in the fact that a welded body remains tight up to the burst pressure.

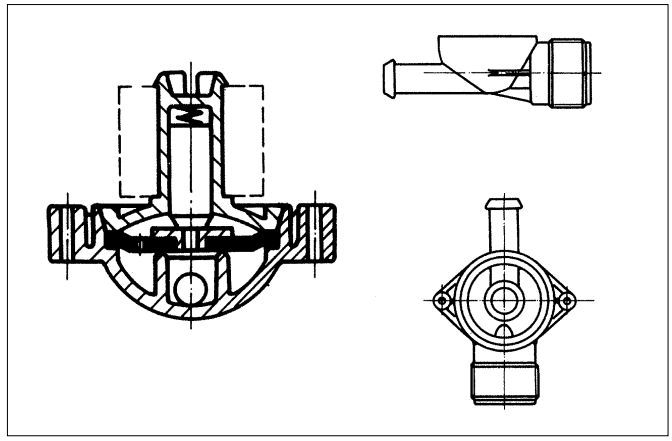

Fig. 10.87 **Housing for diaphragm**

Comparison with other Welding Techniques

Vibration welding is by no means a rival to ultrasonic welding although in some cases they may compete. The solenoid valve shown in Fig. 10.87 can for instance easily be welded ultrasonically. However, the high frequency can cause the thin metal spring to break, in which case the whole housing must be scrapped. Sometimes a complicated part shape does not allow the welding horn to come close enough to the joint. In addition gas and air tight ultrasonic joints require close tolerances which cannot always be achieved.

Thin wall vessels such as pocket lighters can never be provided with a large enough joint to reach the required burst pressure. It would therefore be unwise to weld them on a vibration machine. Here ultrasonic welding is the preferred technique.

Vibration welding can be considered in many applications as a rival to hot plate welding against which it offers some considerable advantages:

- much shorter overall cycle;
- lower sensitivity to warpage, as the relatively high weld pressure flattens the parts out;
- since the molten resin is not exposed to air, the procedure is also suitable for all polyamide grades.

Vibration welding is not a competitor to pure spinwelding. For all circular parts which do not require a determined position to each other, spinwelding is still the cheapest and fastest assembly technique.

Design Considerations for Vibration Welded Parts

Parts which are intended to be assembled by vibration welding must be designed correctly to avoid rejects and failures. Perfect fitting of the joint area is essential.

The first step is to choose an adequate joint giving the required strength and tightness. It should be decided at this stage of development whether flash traps or means to cover or conceal the joint are necessary.

It is essential to support the joint flange all around the part in order to maintain equal pressure over the whole weld area.

If, as shown in Fig. 10.88, the jig cannot fulfill this requirement due to an interruption, weak spots or leakage can be expected.

Thin ribs, however, are permissible, provided their thickness does not exceed appr. 80% of the wall section (Fig. 10.89).

Special care must be taken to make sure vibrations are transmitted from the jig to the part with as little power loss as possible. Such loss may occur from too much clearance in the jig or because the part is held too far away from the joint.

Circular parts without protruding features allowing a tight grip must be provided with ribs as shown in Fig. 10.78a.

With parts having relatively thin walls or which are moulded in soft materials, vibrations should be transmitted to the part as near to the joint area as possible. For non-circular parts this is often only possible with a design similar to that shown in Fig. 10.79B, regardless of whether it is a linear or angular weld.

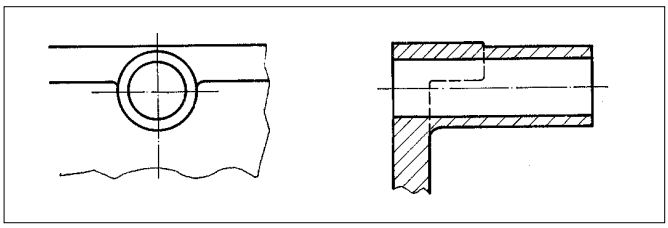

Fig. 10.88 **Bad joint design**

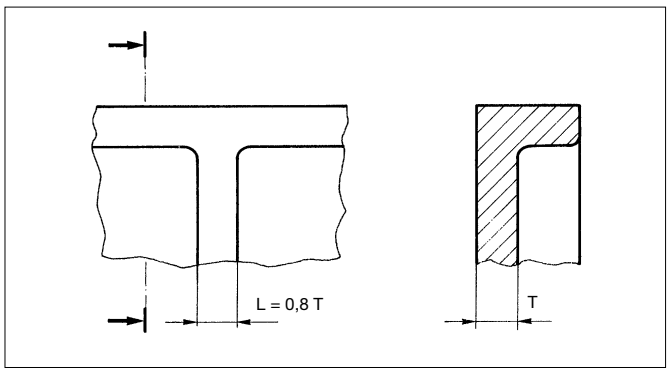

Fig. 10.89 **Ribs in Vibration Welded Parts**

Some materials which have a high coefficient of friction, as for instance elastomers, require an initial surface lubrification before they can be satisfactorily vibrated and welded.

The amount of melt produced during the vibration cycle is in direct relation to the surface flatness. Stiff parts, especially in glass filled resins, may not be flattened out completely by the weld pressure and so require longer vibration cycles to achieve good joints. When designing and moulding such parts, it should therefore be kept in mind that the total assembly time depends partially on joint levelness which in turn can often be improved with appropriate design.

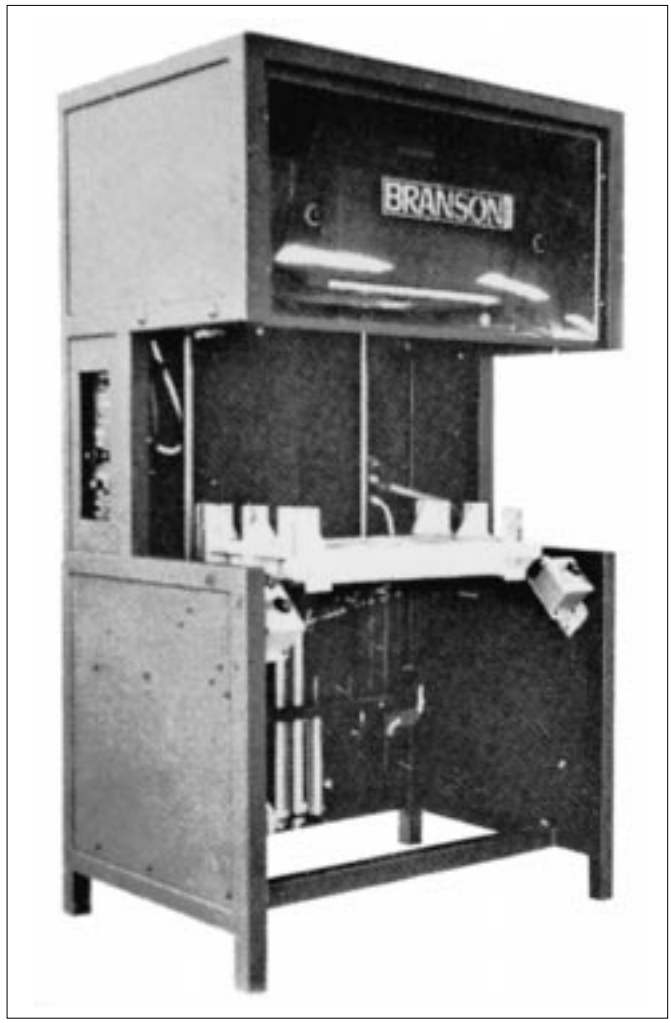

Fig. 10.90 **Vibration Welding Machines**
Commercial linear and angular welding machine.
Manufacturer: Branson Sonic Power Company, Eagle Road, Danbury, Connecticut 06810, USA.
Technical Centres all around the world.

Commercial linear and angular welding machine.
Manufacturer: Mecasonic SA, Zone industrielle,
Rue de Foran, Ville-la-Grand, Case postale 218,
74104 Annemasse Cédex, France.

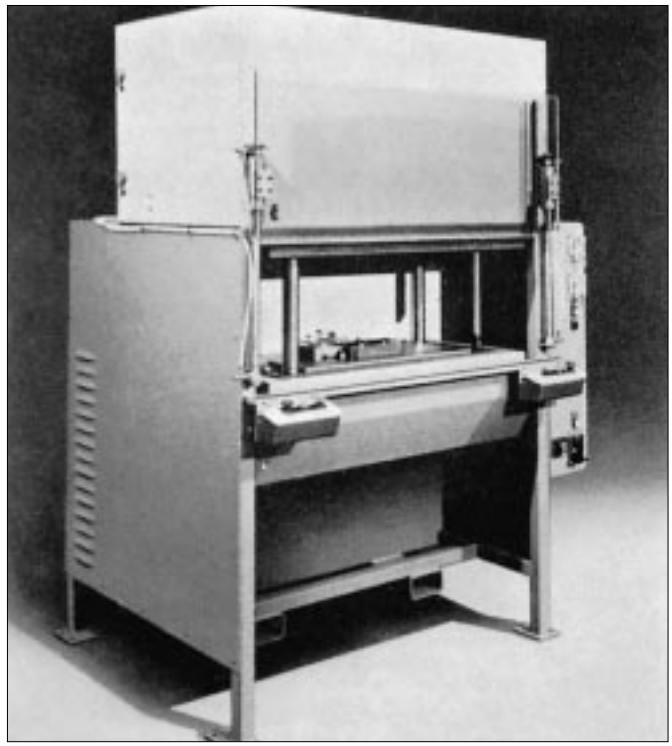

Commercial linear welding machine.
Manufacturers: Hydroacoustics Inc., 999 Lehigh Station Road, P.O. Box 23447, Rochester, New York 14692, USA.
Europe: Bielomatic, Leuze GmbH & Co.,
Postfach 49, D-7442 Neuffen, Germany

Hot Plate Welding

Introduction

Hot plate welding is a technique used for joining thermoplastic parts. Non symmetric parts with fragile internal components which can not accept vibration or ultrasonic welding are suitable for this technique.

The joining of thermoplastic materials is obtained by fusion of the parts surfaces through bringing them into contact with a TEFLON® PTFE coated electrically heated plate. The parts are then pressed together. Alternatively heat can be radiated onto the welding surface using specially designed equipment.

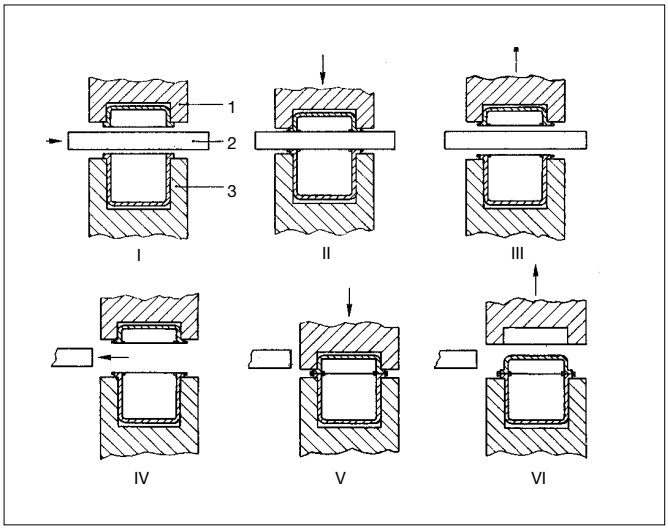

Fig. 10.91 **Hot Plate Welding Cycle**

Welding Cycle

Fig. 10.91 shows step by step (I to VI) the typical hot plate welding cycle using an electrically heated, TEFLON® PTFE coated plate to melt the welding surfaces.

Joint Design

The joint width *W* should be at least 2,5 times the wall thickness for engineering materials (Fig. 10.92a).

Fig. 10.92b-c show possible ways of incorporating flash traps. Gap *a* must be adjusted to obtain a complete closure of the outer lips after welding. This design reduces the effective weld surface and may need wider joints to obtain the same strength as a conventional joint.

Thin walled parts may require a guiding jig. e.g. *a* shown in Fig. 10.92d to ensure adequate contact along the whole surface of the joint.

Note also in this example the larger ribbed joint (in comparison to the wall section) as well as the good support given by the jig at points *b* and *c* to achieve good weld pressure distribution.

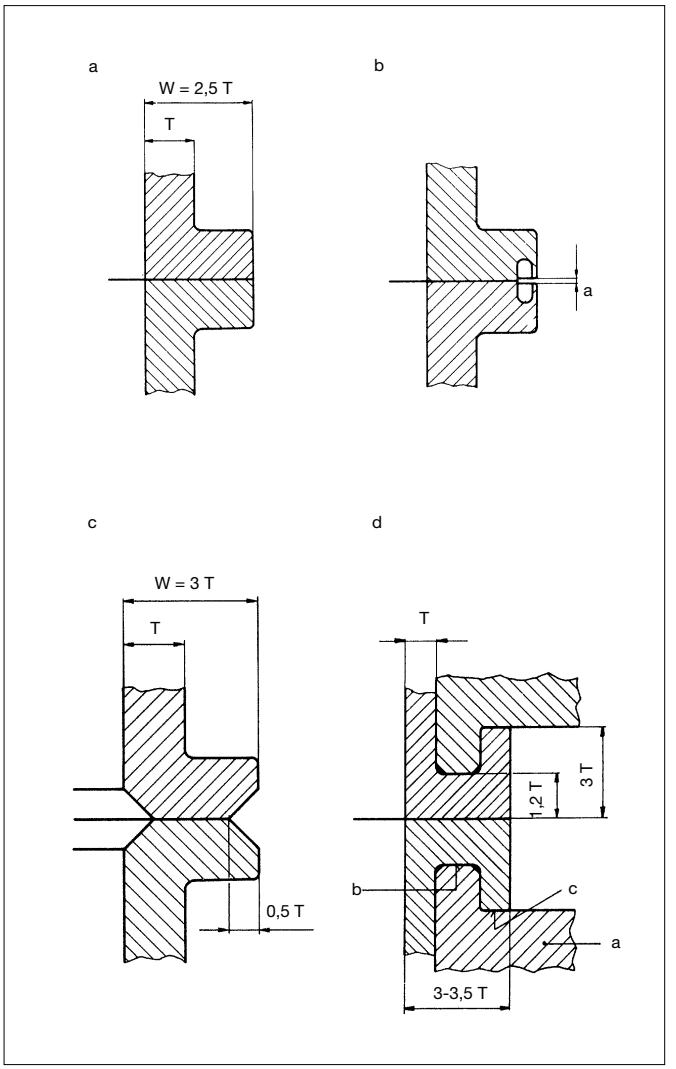

Fig. 10.92 **Joint Design for Hot Plate Welding**

Part Design for Hot Plate Welding

Parts must be designed correctly to avoid rejects and failures. The flatness of the joint area is essential and therefore the design laws for engineering materials should be strictly applied. In particular even wall sections, suitably designed with radiused corners everywhere are vital.

Limitations of Hot Plate Welding

- Polyamide based resins are in general unsuitable for hot plate welding since they oxidise when the melted resin is exposed to air during the welding cycle. The oxidised material will not weld properly.
- Relative to other plastics welding techniques, cycles are long (in the range 30–45 sec).
- Some sticking problems between the polymer and the hot plate are possible. TEFLON® PTFE coating of the plate tends to reduce this considerably.
- Only similar materials can be joined by this method.

c – Lighter

Practical Examples

Practical applications of Hot plate welding are shown in Fig. 10.93.

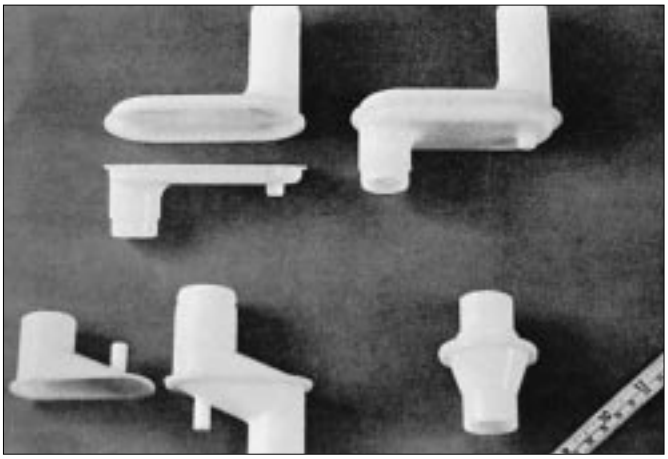

Fig. 10.93 **Applications of Hot Plate Welding**
a – Gas meter parts

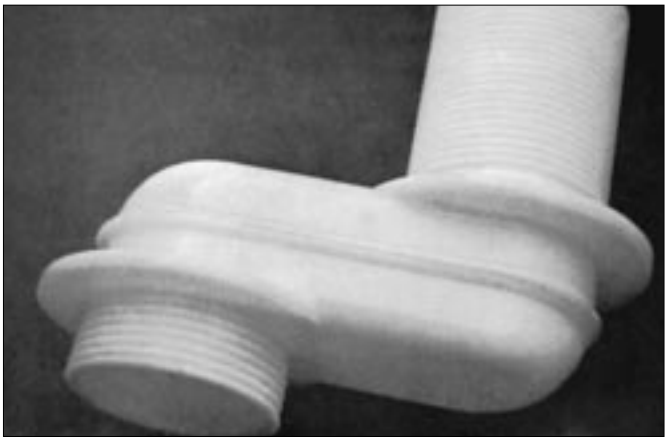

b – Drain part

Hot Plate Welding of ZYTEL®

One of the main problems in welding ZYTEL® nylon 66 is oxidisation and speed of crystallization. Unlike the shear joint as used in Ultrasonic welding or the joint used in Vibration welding, the surface of the joint is exposed to cold air when the hot plate is removed to allow the two parts ot come together. During this time the plastic will tend to oxidise and result in a poor weld.

But with care and attention to certain parameters, ZYTEL® can be hot plate welded to give a weld of good strength in relation to the parent material strength.

The ZYTEL® must be dry as moulded. Welding immediately after moulding is the ideal case, although a delay of 48 hours is acceptable. If this is not practical the parts must be dried to a moisture content below 0,2%. The effect of moisture on the weld quality is quite dramatic. A frothy weld flash will be observed indicating a “wet” material, moisture will promote oxidisation and porosity in the weld and thus reduces the strength of the weld by up to 50%.

Fillers in the plastic will also effect the weld strength. The strongest joint will be achieved with the natural unreinforced Nylon. Glass fibres will obviously not weld to each other and will not move across the weld joint, this gives a similar weakness as a weld line in a moulded part, up to 50% reduction in strength. The strength of the joint is inversely proportional to the glass content.
More glass = lower strength. Carbon black will also adversely affect the weld quality.

Hot plate temperature. Normally as a general rule the temperature of the plate is set to +20° C above the melt temperature of the plastic to be welded.

In the case of ZYTEL® nylon 66 with a melt temperature of 262° C, the plate temperature would be around 285° C. Attention must now be paid to the TEFLON® or PTFE coating on the plates to avoid sticking, because at this temperature the TEFLON® coating will start to fume off.

At a temperature of 270–275° C, the TEFLON® will begin to fume off and the PTFE tape to visibly bubble. To avoid this problem the temperature of the plate should be 265–270° C. This is below the + 20° C rule so a longer heat soak time should be used to compensate for the lower temperature. Another problem with welding at elevated temperatures is that at around 275° C the aluminium plate will warp. To over come this problem Aluminium Bronze plates should be used, these can go up to 500° C.

The jigging of the tow components is quite important. If the jig is made from metal and comes quite high up the part close to the weld line, it will act as a large heat sink, taking away the heat built up in the part durring the heat soak phase. Fast cooling of the parts result in a fast rate of crystallization not allowing the plastic to weld efficiently. Slow cooling is prefered. Non metallic jigs are a solution.

Other parameters

Heat soak time, is part and joint dependant, normally in the area of 15 sec. / min.

Cooling / hold time, similar to heat soak time.

Pressures during weld phase from 0,5 to 2 MPa = 5 to 20 bar.

Joint design, the general rule for the joint dimension is 2,5 × thickness. Tests have shown that if the general wall thickness is 2 mm the weld joint should be 5 mm thick, in order to give a joint strength comparable with the wall strength. Depending on the conditions in service of the part, maximum strength may not be required. For example a small breather pipe would not need such a high weld strength as a mounting bracket. So a thinner weld joint can be used, 1,5 to 2 × t. With less surface area to heat soak the cycle times will be quicker.

Riveting

Riveting Equipment

Riveting is a useful assembly technique for forming strong, permanent mechanical joints between parts at low cost. It involves permanent deformation or strain of a rivet, stud, or similar part at room temperature or at elevated temperatures.

Heading is accomplished by compressively loading the end or a rivet while holding and containing the body. A head is formed at the end of the rivet by flow of the plastic when the compressive stress exceeds the yield point.

Equipment used ranges from a simple arbor press and hand vice to a punch with an automatic clamping fixture for complex multiple heading operations. Examples of tools for heading rivets are shown in Figures 10.96 and 10.97. As the tool is brought into contact with the parts to be joined, a spring-loaded sleeve preloads the area around the protruding shaft to assure a tight fit between the parts. The heading portion of the tool then heads the end of the shaft, forming a strong permanent, mechanical joint.

Heading can be adapted to many applications. The following guidelines should be considered in design.

The different stages of a riveting operation are shown in Fig. 10.98.

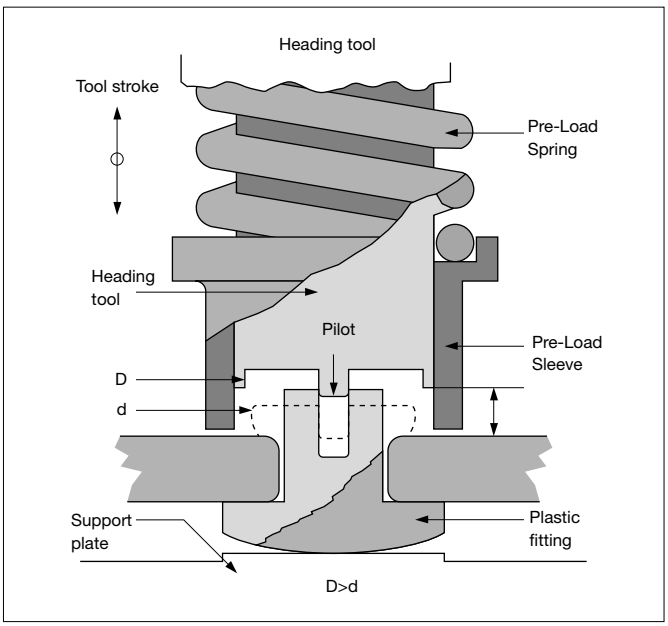

Fig. 10.96 **Heading Tool**

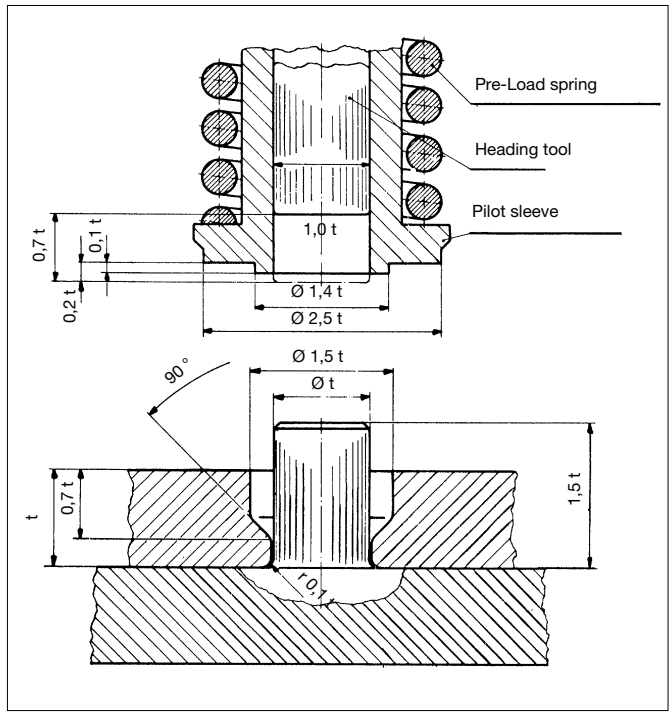

Fig. 10.97 **Heading Tool**

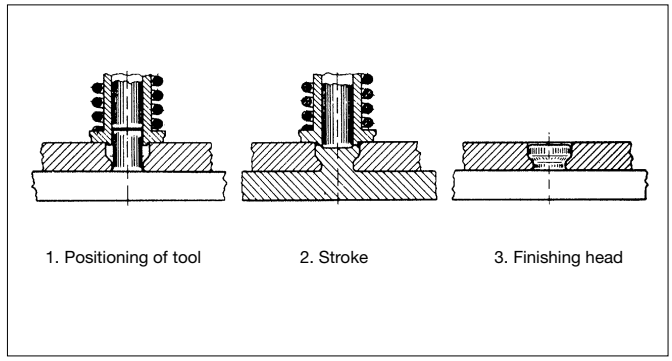

Fig. 10.98 **Riveting Operations**

Riveting Operations

Permanent deformation is produced by pressure rather than by impact.

The suggested tool and spring preload for various shaft diameters are given in the table below.

t	2 mm	3 mm	4 mm	5 mm	6 mm	8 mm	10 mm
Pre-Load Spring	20 kg	45 kg	80 kg	120 kg	200 kg	300 kg	500 kg
Tool-Load (min.)	40 kg	90 kg	160 kg	240 kg	400 kg	600 kg	1000 kg

Relaxation of Shaft and Head

The tendency for a formed head to recover its original shape after deformation depends upon the recovery properties of material used and on environmental temperature.

Caution

– When riveting unmodified ZYTEL® nylon it is advisable to have the part conditioned to equilibrum moisture content before riveting, in the dry state the material is too brittle. Impact modified materials such as ZYTEL® ST and ZYTEL® 408 nylon resins can be riveted in the dry-as-moulded state.

– When riveting onto sheet-metal it is necessary to remove all burrs from the edges of the hole in order to prevent shearing of the head. To ensure no recovery, as normally requested when joining sheet metal to plastic, riveting should be effected by ultrasonics.

Practical Examples

For examples of riveted parts, see Fig. 10.99.

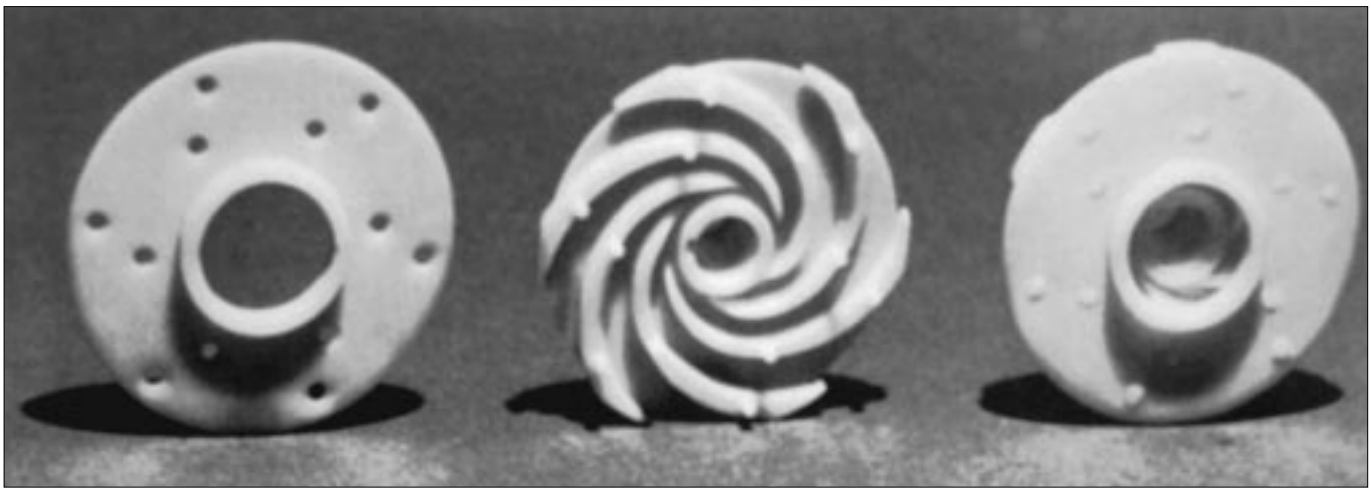

a – Pump impeller

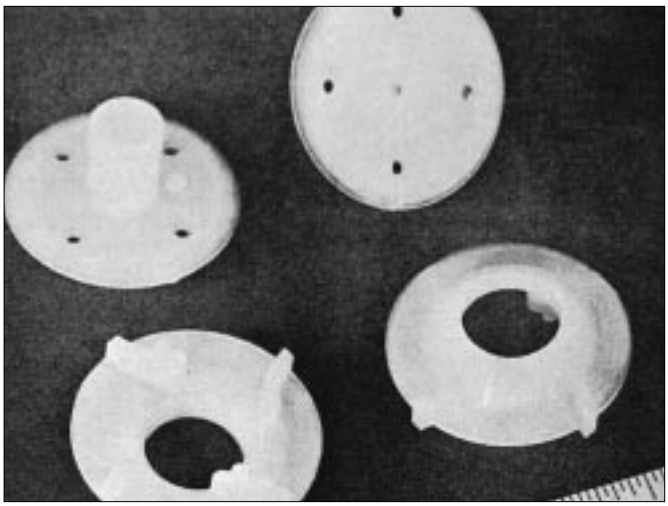

b – Impeller

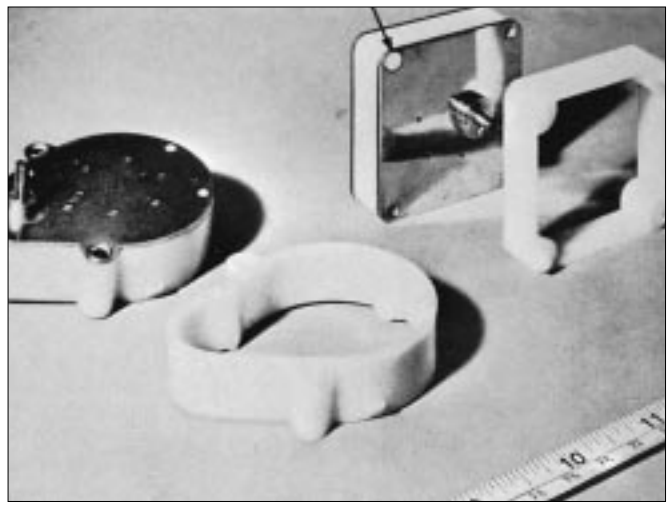

c – Speed-reducer housing

Fig. 10.99 **Applications of Riveting**

Design for Disassembly

To improve the recyclability of plastic parts, components should be designed in such a way, that disassembly is possible wherever possible. Aspects which should be considered for this are:

- Use standard materials, whenever possible;
- When multiple materials have to be used in one part, use assembly techniques which allow easy disassembly at a later stage; see also Table 10.01;
- Disassembly, when applicable, should be possible by using robots;

  The design should allow easy cleaning and re-use of the part;
- The part material should be recognisable by part coding, for example >PA66-35 GF< for polyamide 66 with 35% glass fibre reinforcement;
- Inserts (other materials) should be easily removable, for example by using “breaking out” techniques.

Table 10.01 **Comparison of assembly techniques for plastic parts**

Assembly technique	Material combination	Recyclability	Disassembly
Screw	arbitrary	good	good, but time consuming
Snap-fit	arbitrary	very good	good, when properly designed
Press-fit	arbitrary	good	poor – reasonable
Welding	family members	very good	not possible (not always applicable)
Bonding	arbitrary	poor	poor
Overmoulding	arbitrary	reasonable	poor

11 – Machining, Cutting and Finishing

Safety Precautions

Besides the standard safety rules for mechanical operations, machining, cutting and finishing of plastic parts, unlike metals, can lead to local heating up to the melting point of the plastic or even to its decomposition. It is therefore recommended to follow similar safety work practices as used in the production of plastic parts; namely adequate ventilation of the working area. More detailed information concerning the specific plastic used can be obtained from the Safety Data Sheet of the plastic material. The waste generated generally may not be adequate for recycling due to its potential contamination.

Machining HYTREL®

HYTREL® engineering thermoplastic elastomer is normally made into useful parts by injection moulding, extruding or melt casting. However, prototypes or small production quantities can be machined from blocks or rods of HYTREL®. Also, fabrication of complicated production parts can sometimes be simplified by post-moulding machining operation. This chapter presents some guide-lines for machining HYTREL®.

General

Any method of machining will usually produce a matte finish on parts of HYTREL® engineering thermoplastic elastomer. This finish does not affect the performance of the part unless sliding friction is a critical factor.

Because HYTREL® is elastomeric and highly resilient, high cutting pressure produces local deformation, which in turn can cause part distortion. Therefore, moderate pressure and cutting speeds should be used. Softer grades should be cut with less pressure than harder ones*. Parts should be held or supported to minimize distortion.

HYTREL® is a poor heat conductor; it does not readily absorb heat from cutting tools, as metals do. Frictional heat generated during machining may melt the cut surfaces. Melting can be prevented by cooling the cutting surface, either by directing a tiny jet of high pressure air at the cutting tool or by flooding the surface with water or a water-oil emulsion.

Some guidelines for specific machining operations follow. Even if it is not specifically mentioned in the guidelines, keep in mind that cooling the cut surface will always improve machining.

* Throughout this report, “soft grades” or “soft polymers” refers generally to the grades of HYTREL® that have a flexural modulus below about 240 MPa while “hard grades” or “hard polymers” refers generally to those grades whose flexural modulus is above this value. However, there is no sharp transition point; machining conditions will vary gradually from type to type.

Turning

Standard high-speed steel tools can be used for turning operations. Tools should be very sharp, to minimize frictional heat. A positive rake of 10° on the tool bit is desirable.

Cutting speeds of 2,0 to 2,5 m/s work best when no coolant is used. Heavy cuts can be made at slower speeds, but produce rougher finishes. Cuttings of HYTREL® cannot be chip broken; they remain as one continuous string. When machining soft polymers at high speeds, the cuttings may be tacky on the surface due to frictional heat, and may adhere to or mar the finished surface. Rough cuts produce thicker strings which are less likely to stick to the surface. Harder polymers are easier to cut and yield reasonably good finishes.

Finished sizes are generally achieved by sanding with emery cloth to the desired diameter. Dimensions can be held to 0,125 mm with the soft grades of HYTREL®, and to 0,050 mm on the harder grades.

Long, large diameter parts can be turned satisfacorily if the center is supported to prevent buckling.

Milling

HYTREL® has been milled successfully using a sharp, single blade fly cutter having a 10° back rake and an end mill. With a 76 mm fly cutter, an operating speed of 10 m/s produced good cutting action.

Blocks of HYTREL® must be secured before milling. Use light pressure with a vise, or adhere the part to the table with doubleface tape. Blocks less than 9,5 mm thick are difficult to hold because of distortion.

Drilling

Parts made of HYTREL® engineering thermoplastic elastomer can be drilled with standard high speed twist drills. Drill bits having an included angle of 118° have been used satisfactorily, but lesser angles should improve drilling ability. The drill must be very sharp to produce a clean, smooth hole.

With the hard grades of HYTREL®, good results have been obtained at drill speeds of 500 to 3500 rev/min and cutting speeds of 0,13 to 3,6 m/s. The force required to feed the drill decreases with increasing speed. The softer grades, being more resilient, generally yield a poorer surface finish. Flooding with coolant improves the finish. However, even when using the softest grade of HYTREL® without coolant, no surface melting was observed at a drill speed of 5160 rev/min with drill sizes up to 25 mm diameter.

Tolerances may be difficult to hold. HYTREL® has an "elastic memory" which causes it to close in on holes that are cut into it. As a result, finished dimensions of holes will generally be slightly smaller than the drill size, unless drill whip occurs. To meet exact dimensions, use slightly oversize drills, or hone the hole to size. In test drillings, finished hole size obtained with a 12,7 mm diameter drill bit ranged from 12 mm – 5% undersize – at low speed to 13 mm – 3% oversize – at high speed.

Tapping or threading

Because of the tendency of HYTREL® to close in on holes (see Drilling), tapping threads is impossible with the softer grades and very difficult with the harder grades. Designs which require tapping of HYTREL® should be avoided.

External threads can be cut using a single point tool. However, binding and distortion are frequently encountered when threading parts of HYTREL®.

Band sawing

The following types of blades have been used satisfactorily to saw HYTREL® engineering thermoplastic elastomer:

- 1,6 teeth per cm, raker set;
- 1,6 teeth per cm, skip tooth, raker set;
- 4 teeth per cm, raker set.

Cutting speeds ranging from 0,7 to 30 m/s have been used.

At low speeds, cutting efficiency is reduced and more power is required. At high speeds, less force is needed to feed the stock. Optimum cutting speed with a 1,6-tooth raker blade is about 18 m/s. Slight melting has been observed when using a 4-tooth blade at 30 m/s, indicating that finer teeth cause more frictional heat at high speeds.

Flooding the saw blade with coolant produces a good clean cut because little or no frictional heat is developed.

When a saw that is not equipped with coolant is used, blades that have a wide tooth set are suggested to minimize frictional heat.

Cutting can be improved by wedging the cut open to prevent binding of the blade.

Machining chart for HYTREL® engineering thermoplastic elastomer

Machining Operation	Types of HYTREL®	Preferred Tools	Optimum Cutting Speed	Suggestions
Band Sawing	All Grad	1,6 to 4 tooth per cm blade, raker set	18 m/s	Wedge cut open to prevent binding. Flood saw blade with coolant.
Turning	All Grades (Harder grades are easier to work with)	Standard high-speed steel tools with positive rake of 10° on the bit	2,0 to 2,5 m/s when no coolant is used	Tools should be very sharp. Sand with emery cloth to final dimensions.
Milling	All Grades	Single blade fly cutter having a 10° back rake	10 m/s	Tools should be very sharp. Secure stock for milling.
Drilling	All Grades (Harder grades are easier to drill)	Standard high-speed twist drills	0,13 to 3,6 m/s for harder grades	Use slightly over-size drills or hone to final size. Use coolant for smoother finish.
Tapping	Hardest grades only	–	–	Tapping of HYTREL® is extremely diffcult because polymer tends to close in on holes cut into it. Avoid designs that require tapping.

Machining and Cutting of DELRIN®

DELRIN® can be machined on standard machine shop equipment by sawing, milling, turning, drilling, reaming, shaping, threading and tapping. It is easier to perform these operations on DELRIN® than on the most machinable brass or aluminium alloys.

It is seldom necessary to use cutting oils, water or other cutting aids except in the common wet band sanding operation where water feed is normally used. Machinability is excellent at slow-speed/fast-feed and slowfeed/fast-speed using standing cutting tools. In most cases standard chip breakers on tools perform adequately.

Sawing

Standard power tools such as band saws, jig saws and table saws can be used without modification for sawing DELRIN®. The speed of the saw blade is generally not critical; however, it is important that the teeth in the saw blades have a slight amount of set. DELRIN® is a thermoplastic material and, therefore, frictional heat will cause it to melt so that it is necessary to provide tooth clearance when sawing.

Drilling

Standard twist drills are suitable for use with DELRIN®. The long lead and highly polished lands of the so-called plastic drills are desirable when drilling DELRIN®. However, the leading edges of these drills are usually ground flat and should be modified by changing the drill lip angle to cut rather than scrape.

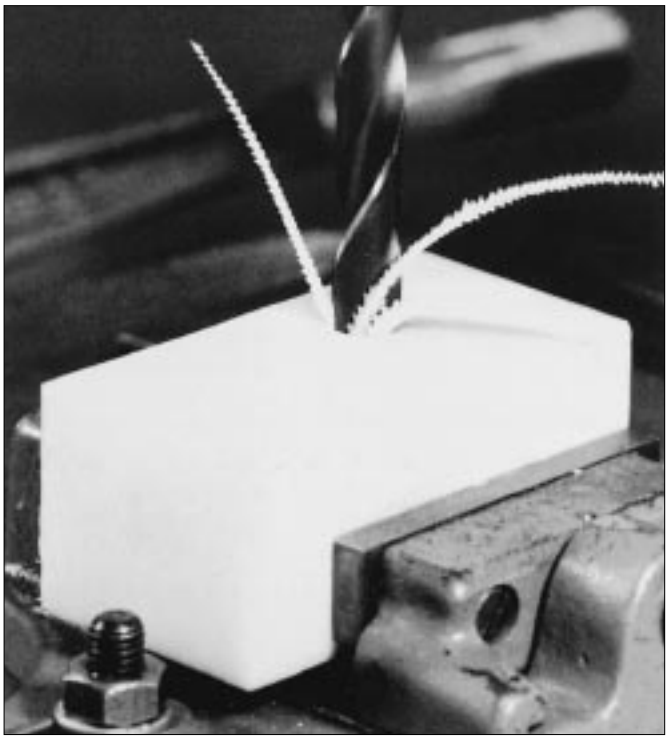

Fig. 11.01 **Drilling Machining conditions: Cutting speed, 1500 rpm; Ø 13 mm, std. 118° twist drill; medium feed. No coolant. Material – DELRIN® 500.**

If the drilling is performed at very high rates, the use of a coolant such as water or a cutting oil to reduce the frictional heat generated may be desirable. Where coolants are not used, the drill should be occasionally withdrawn from the hole to clean out the chips and prevent overheating. Holes can be drilled on size providing the drills are kept cool.

Turning

DELRIN® may be turned on any conventional metal working lathe. The tool bits should be ground as they normally are for working with free cutting brass. A back rake and a large chip breaker will be helpful in most cases to eliminate drag or interference. As with other materials, the best finish will be obtained with a high speed and a fine feed.

In some cases where the length of the material to be turned is large and the diameter of the piece is small, it will be necessary to use steady rests to eliminate whipping of the material. If the rotational speed of the work is high, it will probably be necessary to supply a coolant to the steady rest to carry off the frictional heat generated thereby.

Milling

Standard milling machines and milling cutters may be used with DELRIN® providing the cutting edges are kept very sharp. When using end mills, it has been found desirable to use single fluted mills which have greater chip clearance and generate less frictional heat.

Shaping

DELRIN® can be used on standard shapers without any modification to the machinery or the tools. Excellent results can be obtained with this type of equipment.

Reaming

DELRIN® can be reamed with either hand or collar reamers to produce holes with good finish and accurate dimensions. In general, reamers of the expansion type are preferred. Due to the resiliency of DELRIN®, cuts made with a fixed reamer tend to be undersize unless at least 0,15 mm is removed by the final reaming.

Threading and tapping

DELRIN® can be threaded or tapped with conventional equipment. On automatic or semi-automatic equipment, self-opening dies with high-speed chasers can be used. The use of a lubricant or coolant has not been found necessary, but in some cases, on very high-speed operations, it may be of assistance. Threads may be cut in DELRIN® on a lathe using conventional single-pointed tools. As with metals, several successive cuts of 0,15-0,25 mm should be made. Finish cuts should not be less than 0,15 mm because of the resiliency of DELRIN®. When threading long lengths of rod stock, it is necessary to use a follow rest or other support to hold the work against the tool.

Blanking and punching

Small flat parts such as washers, grommets and non-precision gears (1,5 mm or less in thickness) often can be produced more economically by punching or stamping from a sheet of DELRIN®. Conventional dies are used in either hand- or power-operated punch presses. With well-made dies, parts of DELRIN® may be blanked or punched cleanly at high speeds. If cracking occurs, it can usually be avoided by pre-heating the sheet.

Finishing of DELRIN®

Burr removal

Although there are several ways of removing burrs, it is better to avoid forming them. This is best accomplished by maintaining sharp cutting edges on tools and providing adequate chip clearances. Where only a few parts are being made, it is often simplest to carve or scrape off burrs with hand tools. If burrs are not too large, they can also be removed with vapour blast or honing equipment. Care must be taken to avoid removing too much material. Still another method of removing burrs on parts of DELRIN® is through the use of commercial abrasive tumbling equipment. The exact grit-slurry make-up and tumbling cycle are best determined by experimentation.

Filing and grinding

A mill file with deep, single, cut, coarse curved teeth, commonly known as a "Vixen" file, is very effective on DELRIN®. This type of file has very sharp teeth and produces a shaving action that will remove DELRIN® smoothly and cleanly. Power-driven rotary steel burrs or abrasive discs operating at high speeds are effective in finishing parts of DELRIN®. Standard surface grinders and centreless grinding machines can also be used to produce smooth surfaces of DELRIN®.

Sanding and buffing

DELRIN® can be wet sanded on belt or disc sanding equipment. After sanding to a smooth finish, the surface may be brought to a high polish by the use of standard buffing equipment. Care should be used in these operations to avoid excessive feeds which tend to overheat the DELRIN®.

The buffing operation normally consists of three steps: ashing, polishing and wiping.

The ashing is done with a ventilated wheel of open construction which can be made up of alternating layers of 30 cm and 15 cm diameter muslin discs. In this way, an ashing wheel of 10 to 12 cm in thickness may be built up. The ashing wheel is kept dressed with a slurry of pumice and water during the buffing operation.

The part of DELRIN® is held lightly against the wheel and kept in constant motion to prevent burning or uneven ashing. Speed of the wheel should be approximately 1000 rpm for best results.

The polishing operation is performed in a similar manner and on a similarly constructed buffing wheel. The difference is that the wheel is operated dry and a polishing compound is applied to half the surface of the wheel. The other half remains untreated.

The part of DELRIN® is first held against the treated half of the wheel for polishing and then moved to the untreated side to wipe off the polishing compound. Optimum speeds for the polishing wheel range from 1000 to 1500 rpm.

Safety precautions

Fine shavings, turnings, chips, etc., should be cleaned up and not allowed to accumulate. DELRIN® acetal resin will burn, and an accumulation of chips could create a fire hazard.

Annealing of DELRIN®

Annealing is not generally required as a production step because of added cost and difficulty in predicting dimensions. If precision tolerances are required, parts should be moulded in hot moulds (90-110° C) to closely approach the natural level of crystallinity and minimize post-mould shrinkage.

Annealing is suggested as a test procedure in setting up moulding conditions on a new mould to evaluate post-mould shrinkage and moulded-in stresses. The change in part dimensions during annealing will closely represent the ultimate change in part size in use as the part reaches its natural level of crystallinity.

Most manufacturers of stock shapes anneal their product to relieve stresses. However, further annealing may be required during machining of parts with close tolerances to relieve machined-in stresses, especially following heavy machining cuts. Annealing of machined parts normally precedes final light finishing or polishing cuts.

Air annealing

Air annealing of DELRIN® is best conducted in air-circulating ovens capable of maintaining a uniform air temperature controllable to ±2° C. In air, one hour at 160° C is required to reach the same degree of annealing as is achieved in 30 minutes in oil at 160° C because heat transfer takes place more slowly in air than in oil. Annealing time is 30 minutes for part heat up to 160 ± 2° C and then 5 minutes additional time per 1 mm of wall thickness.

Oil annealing

Recommended oils are ‘‘Primol’’ 342* and ‘‘Ondina’’ 33* or other refined annealing oils. Parts may be annealed at a ‘‘part’’ temperature of 160° ± 2° C. Annealing time at 160° C is 5 minutes per 1 mm of wall thickness after parts reach annealing bath temperature (15-20 min).

Thorough agitation should be provided to assure uniform bath temperature and to avoid localized overheating of the oil. The latter condition may cause deformation or even melting of the parts. Parts should contact neither each other nor the walls of the bath.

Cooling procedure

When annealed parts are removed from the annealing chamber, they should be cooled slowly to room temperature in an undisturbed manner. Stacking or piling, which may deform the parts while they are hot, should be delayed until parts are cool to the touch.

Machining and Cutting of ZYTEL®

ZYTEL® can be machined using techniques normally employed with soft brass. Although the use of coolants, such as water or soluble oils, will permit higher cutting speeds, coolants are generally not necessary to produce work of good quality. Since ZYTEL® is not as stiff as metal, the stock should be well supported during machining to prevent deflection and resultant inaccuracies. Parts should normally be brought to room temperature before checking dimensions.

Tool design

Cutting tools used for ZYTEL® should be sharp and have plenty of clearance. The necessity of sharp cutting edges and easy elimination of chips cannot be emphasized too strongly. Dull tools, or tools having edges which scrape rather than cut, will cause excessive heat. Tools without sufficient clearances for ready removal of chips will cause the chips to bind and melt.

As in the case of metals, carbide and diamond tipped tools can be used to advantage when machining ZYTEL® on long production runs.

Sawing

Conventional power equipment, including band saws, jig saws and table saws can be used without modification for sawing ZYTEL®. However, it is important that the teeth in all saw blades, bands, and circular saws have a slight amount of ‘‘set’’. The socalled hollow ground ‘‘plastic saws’’ whose teeth have no ‘‘set’’ will not give satisfactory performance with ZYTEL®.

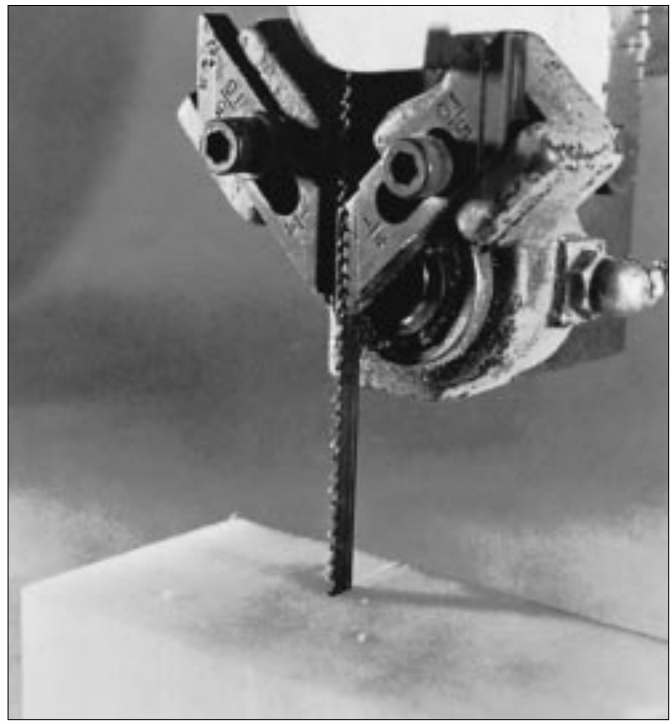

Fig. 11.02 **Sawing Machining conditions:**
Saw speed, 1200 m per min; blade, 6 mm wide, 4 teeth per cm; No coolant.
Material – ZYTEL® E101 – 35 mm thick.

More frictional heat is developed when sawing ZYTEL® than with most other plastics, so that ample tooth clearance should be provided to prevent binding and melting.

Although ZYTEL® can be sawed without coolant, the use of coolants will permit faster cutting rates.

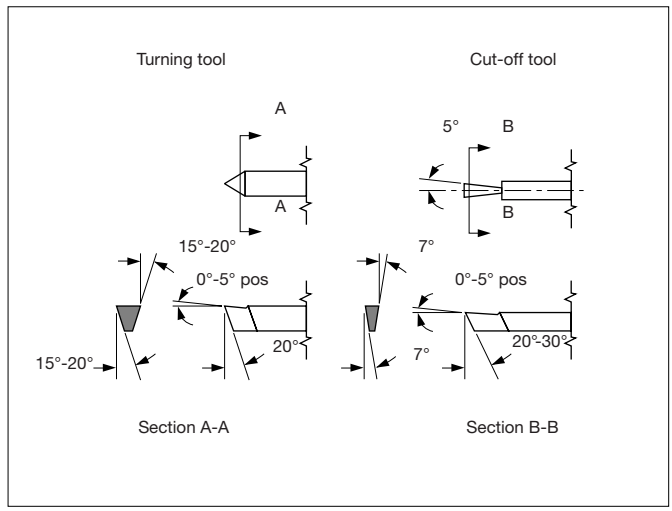

* SUPPLIERS OF ANNEALING OILS-EUROPE
‘‘Primol’’ 342 and ‘‘Primol’’ 355 (Esso) ‘‘Ondina’’ 33 (Shell) White Oil N 15 (Chevron).

Drilling

ZYTEL® can be drilled satisfactorily with conventional twist drills. The included point angle should be 118° with 10°–15° lip clearance angles. So-called ‘‘plastic drills’’ or ‘‘brass drills’’ will not perform satisfactorily with ZYTEL®. Such drills have their leading edge ground flat in order to obtain a ‘‘scraping’’ action. In ZYTEL® this results in overheating and possible seizing. However, the long lead and highly polished lands of the ‘‘plastic drills’’ permit chips to readily flow from deep holes. This is a very desirable feature when drilling ZYTEL®. By modifying the drill lip angle to cut rather than scrape, these drills will work very well on ZYTEL®. Heavy feeds should be used, consistent with desired finish, to prevent excessive heat resulting from scraping rather than cutting.

Fig. 11.03 **Drilling Machining conditions:**
Drill size, 10 mm;
Speed 1000 rpm; No coolant.
Material – ZYTEL® E101 – 35 mm thick.

Coolants should be used where possible when drilling ZYTEL®. Where coolants are not used, the drill should be frequently withdrawn from the hole to clean out the chips and prevent overheating. Holes can be drilled on size providing the drills are kept cool.

Reaming

ZYTEL® can be reamed with conventional types of reamers to produce holes with good finish and accurate dimension. Reamers of the expansion type are preferred. Because of the resiliency of ZYTEL®, cuts made with a fixed reamer tend to be undersize. It is difficult to remove less than 0,05 mm when reaming ZYTEL®. Although the reamer will pass through the hole, no stock will be removed, and the hole will remain at the original dimension after the reamer is removed. At least 0,15 mm should be removed by the final reaming if a hole of correct size is to be produced.

Threading and tapping

ZYTEL® can be threaded or tapped with conventional equipment. Though desirable, the use of a lubricant or coolant when threading or tapping ZYTEL® is not always necessary.

Threads may be cut in ZYTEL® on a lathe using conventional single-pointed tools. As with metals, several successive cuts of 0,15-0,25 mm should be made. The finish cut should not be less than 0,15 mm, because of the resiliency of the material. When threading long lengths of rock stock, it is necessary to use a follow rest or other support to hold the work against the tool.

In production tapping, it is freqently desirable to use a tap 0,15 mm oversize unless a self-locking thread is desired.

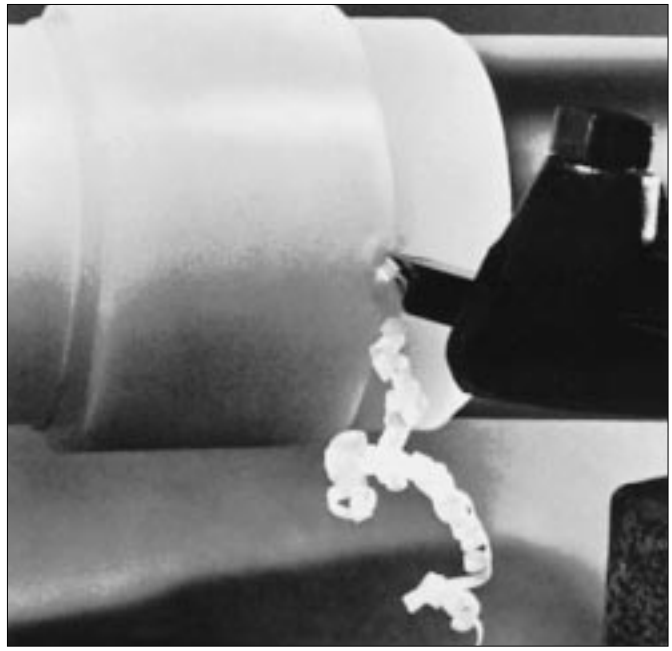

Fig. 11.04 **Turning Machining conditions:**
Lathe speed, 980 rpm;
cutting speed 185 m/min; feed 0,15 mm;
depth of cut, 2,5 mm; No coolant.
Material – ZYTEL® E101 – 60 mm diameter.

Turning

ZYTEL® can be turned easily on any standard or automatic metal working lathe. No special precautions need be observed, although, as in other machining operations, tools should be very sharp. Tool bits should be ground as for soft brass; with a back rake to give free removal of the continuous chip, and with a large clearance to eliminate drag or interference. Chip breakers are not generally effective with ZYTEL® because of its toughness. A pick-off can be used as an aid in separating the turnings where desired. As with other materials, the best finish will be obtained with a high speed and fine feed.

Milling

ZYTEL® can be readily milled using conventional cutters providing the cutting edges are kept very sharp.
Where possible, climb milling should be used to minimize burring the ZYTEL®. Cutting speeds in excess of 30 m/min and heavy feeds in excess of 230 mm/min have been used successfully.

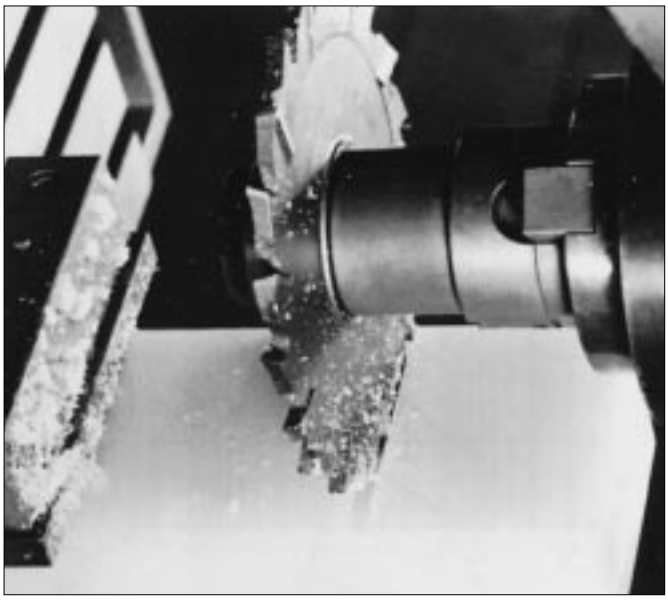

Fig. 11.05 **Milling** **Machining conditions:**
Cutting speed, 250 m/min; 100 mm cutter;
2,5 mm spindle; feed 150 mm/min.
Depth of cut, 0,25 mm; No coolant.
Material – ZYTEL® E101.

Blanking and punching

Small flat parts such as washers, grommets and non-precision gears, 2 mm or less in thickness, often can be produced more economically by punching or stamping from an extruded ZYTEL® strip than by injection moulding. Conventional dies are used in either hand or power operated punch presses.

With well-made dies, ZYTEL® may be blanked or punched cleanly at high speed. If cracking occurs, it can usually be overcome by preheating the strip or by soaking it in water until approximately two percent moisture has been absorbed.

Finishing of ZYTEL®

Burr removal

Some machining operations tend to create burrs on the part. Although there are a number of ways to remove burrs, it is better to avoid forming them. This is best accomplished by maintaining sharp cutting edges and providing plenty of chip clearances.

Where only a few parts are being made, it is often simplest to carve or scrape off the burrs with hand tools.

If the burrs are not too large, they can be successfully removed by singeing or melting. In singeing, the burrs are burned off by playing an alcohol flame across the part. The burrs can be melted by directing hot nitrogen gas 290° C briefly across the part surface. The part should be exposed to the flame or gas very briefly so as not to affect the dimension of the part.

Fine burrs can also be removed with vapour blast or honing equipment. Where dimensions are critical, care should be taken to avoid removing too much material.

Commercial abrasive tumbling equipment is also used for deburring parts of ZYTEL® but the tumbling cycle is normally much longer than with metal parts. Although the exact grit slurry make-up for a particular part can best be determined by experimenting. The grit content by volume is usually twice the volume of parts of ZYTEL®.
A detergent is also added to the watergrit mixture to prevent the parts from being discoloured by the grit.

Filing and grinding

Because of the toughness and abrasion-resistance of ZYTEL® nylon resins, conventional files are not satisfactory. However, power-driven rotary steel burrs operating at high speeds are effective. Abrasive discs used on a flexible shaft or on a high-speed hand grinder will remove stock from ZYTEL® parts quickly and efficiently. Use of a coolant is generally desired for this type of operation.

A mill file with deep, single-cut, coarse, curved teeth (commonly known as a “Vixen” file), as is used for aluminium and other soft metals, is very effective on ZYTEL®. This type of file has very sharp teeth and produces a shaving action that will remove ZYTEL® smoothly and cleanly.

Sanding and buffing

ZYTEL® can be wet sanded on belt or disc sanding equipment. After sanding to a smooth finish, the surface may be brought to a high polish by use of standard buffing equipment. The buffing operation is normally considered as three steps: ashing, polishing and wiping.

Ashing is done with a ventilated wheel of open construction, made up of alternating layers of say 200 and 460 mm diameter muslin discs. In this way, an ashing wheel of some 100 to 130 mm in width may be built up. The ashing wheel is kept dressed with a slurry of pumice and water during the buffing operation.

The part of ZYTEL® is held lightly against the wheel and kept in constant motion to prevent burning or uneven ashing. Speed of the wheel should be approximately 1000–1200 rpm for wheels of 300 to 400 mm diameter. It is essential that the wheel be operated slowly enough to retain a charge of the slurry.

The polishing operation is performed in a similar manner and on a similarly constructed buffing wheel, the difference being that the wheel is operated dry and a polishing compound is applied to half the surface of the wheel, the other half remaining untreated. The part of ZYTEL® is first held against the treated half of the wheel for polishing and then moved to the untreated side to wipe off the polishing compound. Optimum speeds for the polishing wheel range from 1000 to 1500 rpm for a 400 mm diameter wheel.

Annealing of ZYTEL®

When annealing of ZYTEL® is required, it should be done in the absence of air, preferably by immersion in a suitable liquid. The temperature of the heat-treating liquid should be at least 28° C above the temperature to which the article will be exposed in use – a temperature of 150° C is often used for general annealing. This will ensure against dimensional change caused by uncontrolled stress-relief occurring below this temperature. The annealing time required is normally 5 minutes for 1 mm of cross section. Upon removal from the heat-treating bath, the part should be allowed to cool slowly in the absence of drafts; otherwise, surface stresses may be set up. Placing the heated article in a cardboard container is a simple way of ensuring slow, even cooling.

The choice of liquid to be used as the heat-transfer medium should be based on the following considerations:

- Its heat range and stability should be adequate.
- It should not attack ZYTEL®.
- It should not give off noxious fumes or vapours.
- It should not present a fire hazard.

High boiling hydrocarbons, such as oils or waxes, may be used as a heat-transfer medium if the deposit left on the surface of the moulded item is not objectionable, as in the case of parts which will be lubricated in use.

Recommended oils are “Ondine” 33 (Shell) and “Primol” 342 (Esso). Experimental work has also shown the suitability of annealing in an oven using a nitrogen atmosphere, although this does require special equipment.

The heat-treating bath should be electriccally heated and thermostatically controlled to the disired temperature. For best thermal control, heat should be supplied through the sidewalls as well as through the bottom of the vessel. A large number of small items is best handled by loading them into a wire basket equipped with a lid to prevent the parts from floating, and immersing the basket in the bath for the required period of time.

For applications where the maximum temperature will be 70° C or less, acceptable stress-relief can be obtained by immersion in boiling water. This method also has the advantage that some moisture is absorbed by the ZYTEL®, thus partially conditioning the piece. For stress-relief, 15 minutes per 3 mm of cross-section is sufficient. Longer times will be required if the piece is to be moisture-conditioned to or near equilibrium.

Moisture-conditioning

The most pratical method of moisture-conditioning for use in air, where 2,5% water is to be incorporated, is a simple immersion in boiling water. However, this method does not give true equilibrium, since excess moisture is taken on at the surface, and can only redistribute itself with time. One suggested procedure is to put about 3 to 4% water by weight into the parts. The excess will evaporate from the surface in time. Boiling times to 3% moisture are shown in Figure 11.06.

An excellent method for preparing a few parts for test is to heat in a boiling solution of potassium acetate (1250 g of potassium acetate per 1 l of water). A covered pot and a reflux condenser should be used to maintain the concentration of the solution. Density of solution 1,305-1,310 at 23° C. A maximum of 2,5% moisture is absorbed by the ZYTEL®, no matter how long the treatment is continued. The time required varies from 4 hours, for a thickness of 2 mm, to 20 hours, for a thickness of 3 mm.

Soaking in boiling water is a good method for moisture-conditioning parts to be used in water or aqueous solutions. The part is exposed until saturation is essentially complete, as shown by the saturation line in Figure 11.06. For thick sections (3 mm or more), it is more practical to condition the piece only partially, since absorption becomes very slow beyond 4 or 5%.

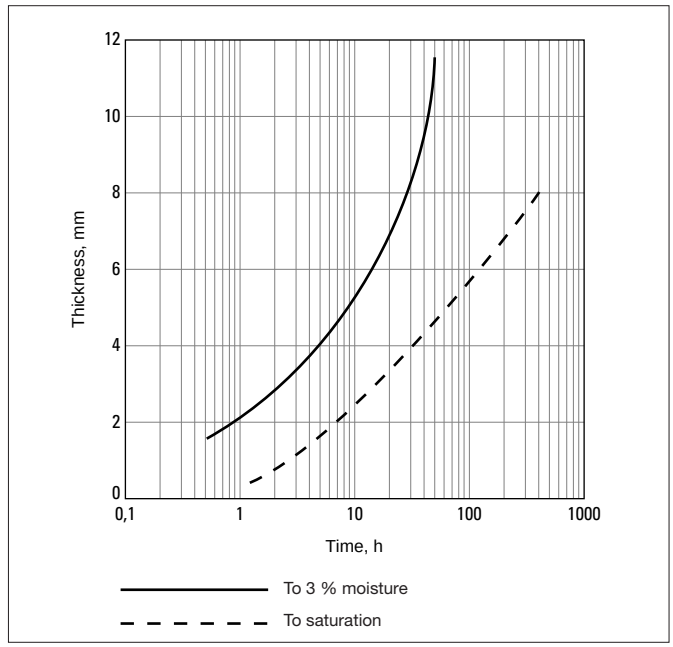

Fig. 11.06 **Moisture conditioning of ZYTEL® E101 (time of immersion in boiling water)**

For further information on Engineering Polymers contact:

Benelux
Du Pont de Nemours (Belgium)
Antoon Spinoystraat 6
B-2800 Mechelen
Tel. (15) 44 14 11
Telex 22 554
Telefax (15) 44 14 09

Bulgaria
Du Pont Bulgaria
18, Tcherni Vrah Blvd.
Bldg. 2, Floor 5
BG-1407 Sofia
Tel. (2) 66 59 13/66 57 36
Telex 24 261 DUPONT BG
Telefax (2) 65 63 29/66 56 11

Česká Republika a Slovenská Republika
Du Pont - Conoco CS Spol. S.R.O.
Palác Kultury
5, Kvetna 65
CZ-14009 Praha 4
Tel. (02) 422 641 to 422 646
Telex 121 834 DUPO C
Telefax (02) 61 21 50 51

Danmark
Du Pont JET Danmark A/S
Roskildevej 163
DK-2620 Albertslund
Tel. 436 236 00
Telex 33 263 DENDUPONT
Telefax 436 236 17

Deutschland
Du Pont de Nemours
(Deutschland) GmbH
DuPont Straße 1
D-61343 Bad Homburg
Tel. (06172) 87 0
Telex 410 676 DPD D
Telefax (06172) 87 27 01

Egypt
Medgenco International Trade Co.
13, El Bostan Street
ET-Cairo
Tel. (02) 392 78 66
Telex 93 742 MK UN
Telefax (02) 392 84 87

España
Du Pont Ibérica S. A.
Edificio L'Illa
Avda. Diagonal 561
E-08029 Barcelona
Tel. (3) 227 60 00
Telefax (3) 227 62 00

France
Du Pont de Nemours (France) S.A.
137, rue de l'Université
F-75334 Paris Cedex 07
Tel. (1) 45 50 65 50
Telex 206 772 dupon
Telefax (1) 47 53 09 67

Hellas
DuPont Agro Hellas S.A.
12, Solomou & Vas. Georgiou Street
GR-152 32 Halandri, Athina
Tel. (01) 680 16 14
Telefax (01) 680 16 11

Israël
Gadot
Chemical Terminals (1985) Ltd.
22, Shalom Aleichem Street
IL-633 43 Tel Aviv
Tel. (3) 528 62 62
Telex 33 744 GADOT IL
Telefax (3) 282 717

Italia
Du Pont de Nemours Italiana S.p.A.
Via Aosta 8
I-20063 Cernusco sul Naviglio (Mi)
Tel. (02) 25.302.1
Telefax (02) 92 107 845

Magyarország
Serviced by Interowa.
See under Österreich.

Maroc
Deborel Maroc S. A.
40, boulevard d'Anfa - 10º
MA-Casablanca
Tel. (2) 27 48 75
Telex 23 719 BOUKBEN
Telefax (2) 26 54 34

Norge
Nordic Polymers A/S
Niels Leuchsvei 99
N-1343 Eiksmarka
Tel. 67 14 28 70
Telefax 67 14 30 44

Österreich
Interowa
Fürer-Haimendorf KG
Bräuhausgasse 3-5
A-1050 Wien
Tel. (01) 512 35 71
Telex 112 993 IROWA A
Telefax (01) 512 35 71 12/
512 35 71 31

Polska
Du Pont Conoco Poland Sp.z o.o.
Intraco Bldg - Floor 13
ul. Stawki 2
PL-00193 Warszawa
Tel. (2) 635 04 01
Telex 812 376 DUP PL
Telefax (2) 635 07 61

Portugal
ACENYL
Rua do Campo Alegre, 672 - 1º
P-4100 Porto
Tel. (2) 69 24 25/69 26 64
Telex 23 136 MACOL
Telefax (2) 600 02 07

Romania
Serviced by Interowa.
See under Österreich.

Russia
E.I. du Pont de Nemours & Co. Inc.
Representative Office
B. Palashevsky Pereulok 13/2
SU-103 104 Moskva
Tel. (095) 956 38 50
Telex 413 778 DUMOS SU
Telefax (095) 956 38 53

Schweiz/Suisse/Svizzera
Dolder AG
Immengasse 9
Postfach 14695
CH-4004 Basel
Tel. (061) 326 66 00
Telex 962 306 DOL CH
Telefax (061) 326 62 04

Slovenija
Serviced by Interowa.
See under Österreich.

Suomi/Finland
Du Pont JET Oy
Piispankalliotie 17
P.O. Box 136
FIN-02201 Espoo
Tel. (90) 88 72 61
Telefax (90) 88 72 62 00

Sverige
Du Pont Conoco Nordic AB
Torshamnsgatan 35
S-164 86 Kista (Stockholm)
Tel. (08) 750 37 00
Telex 12 410 DUPONO S
Telefax (08) 750 90 41

Türkiye
Du Pont Products S.A.
Turkish Branch Office
Sakir Kesebir cad. Plaza 4
No 36/7, Balmumcu
TR-80700 Istanbul
Tel. (212) 275 33 83
Telex 26541 DPIS TR
Telefax (212) 211 66 38

Ukraine
Du Pont de Nemours
International S.A.
Representative Office
3, Glazunova Street
Kyiv 252042
Tel. (044) 294 9633/269 1302
Telefax (044) 269 1181

United Kingdom
Du Pont (U.K.) Limited
Maylands Avenue
GB-Hemel Hempstead
Herts. HP2 7DP
Tel. (01442) 34 65 00
Telefax (01442) 24 94 63

Argentina
Du Pont Argentina S.A.
Avda. Mitre y Calle 5
(1884) Berazategui-Bs.As.
Tel. (541) 319-4484/85/86
Telefax (541) 319-4417

Brasil
Du Pont do Brasil S.A.
Al. Itapecuru, 506 Alphaville
06454-080 Barueri-São Pablo
Tel. (5511) 421-8468/8556

Asia Pacific
Du Pont Kabushiki Kaisha
Arco Tower, 14th Fl.
8-1, Shimomeguro 1-chome
Meguro-ku, Tokyo 153
Tel. (03) 5424 6100

South Africa
Plastamid
P.O. Box 59
Elsies River 59
Cape Town
Tel. 27 (21) 592 12 00
Telefax 27 (21) 592 14 09

USA
DuPont Engineering Polymers
Chestnut Run Plaza, Bldg. 713
P.O. Box 80713
Wilmington, Delaware 19880-0713
Tel. (302) 999 45 92
Telefax (302) 999 43 58

Requests for further information from countries not listed above should be sent to:

Du Pont de Nemours International S.A.
2, chemin du Pavillon
CH-1218 Le Grand-Saconnex,
Geneva
Tel. (022) 717 51 11
Telex 415 777 DUP CH
Telefax (022) 717 52 00
Internet location:
http://www.dupont.com/

Start
with
DuPont

03.97 Printed in Switzerland
H-34737

DuPont Engineering Polymers