ASSISTIVE DEVICES FOR MOTOR DISABILITIES

There are many examples of assistive devices for people with manipulative and locomotive disabilities. These devices allow disabled people to perform many activities of daily living, thus improving their quality of life. People with disabilities are increasingly able to lead independent lives and play a more productive role in society. In the case of children with disabilities, such assistive devices have been shown to be critical to their cognitive, physical, and social development (1).

The earliest assistive devices were prosthetic limbs, dating back to 500 B.C. (2). The early wheelchairs, in contrast, found widespread use less than 300 years ago. These simple prosthetic limbs and wheelchairs have since evolved into more complex multi-degree-of-freedom mechanical and electromechanical devices. In particular, robotic technology has been used to enhance the quality of life of people with disabilities, primarily by enhancing a person's capability for independent living and vocational productivity. An assistive robot (also called a rehabilitation robot) may be viewed as distinct from a prosthesis in that it is not attached to the user, but may reside on a table top, or on the side of a wheelchair, or on an independent mobile base. However, this distinction may blur in the case of electromechanical aids that are worn by the user.

The goal of this article is to review the state of the art in the technology for assistive devices for people with disabilities, with a particular focus on the technology that is loosely referred to as robotics. This includes articulated orthoses as well as robotic devices. In the process, we review research that has been done by us and by other groups on assistive devices for manipulation and locomotion. We are less interested in examples of devices that simply perform the mechanical function of a person's limb and instead focus on assistive aids that have broader applications. Further therapeutic applications are beyond the scope of this article. Similarly, orthoses that strengthen limbs and spines, or prevent deformities are not considered here. Instead the main goal is to provide the reader with an understanding of how the technology and science that underlies robotics can be used to develop assistive devices for people with manipulative and locomotive disabilities.

J. Webster (ed.), *Wiley Encyclopedia of Electrical and Electronics Engineering*. Copyright © 1999 John Wiley & Sons, Inc.

PROSTHETICS

The basic goal of a prosthetic device is to provide to a person with a disability an aid that can perform the function of one or more limbs. We focus on upper-limb prosthetics for people with manipulative disabilities.

The body-operated Bowden cable arm came into widespread use after World War II and still remains the prosthesis of choice for many amputees, primarily because of its inherent kinesthetic feedback associated with cable control (3,4). However, with the advent of new technologies such as the transistor and the microprocessor, externally powered devices that augment human strength became more prominent. There are two main approaches to controlling such externally powered devices:

1. Activation of prosthetic joints with the aid of myoelectric signals from intact musculature
2. Control by displacement signals obtained from body movements

Electromyographic Control

Electromyographic (EMG), or myoelectric, control uses the electric signal due to depolarization of the cell membrane of muscle fibers during contraction (5). The signal is sensed through electrodes, amplified, processed, and then used as input to the actuators. It was first used in prosthetics by Reiter in the early 1940s (4). Later, Bottomley (6) used EMG signals for the proportional control of prehension in the English hand. EMG control has been employed in many prosthetic arms with limited degrees of freedom. The main drawback of EMG control (6–8) is its essentially open loop character due to the absence of position proprioception. Use of EMG for multiaxis prostheses or robots is deemed inferior because controlling hand position in space by individual joint velocity control is considered mentally taxing (9). Although alternatives such as resolved motion rate control (10) or end-point control (8) can in principle overcome this shortcoming, it is very difficult to draw the control signals from the muscles that are directly related to the movement, which is an important requirement for natural control of the arm.

A variant on the EMG control is to use impedance properties of muscles, as opposed to the more traditional velocity-controlled EMG (11). Although this approach appears to have its advantages, it still fails to provide proprioception to the user and the mode of operation is still open-loop.

There have been many attempts to develop an artificial sensory system for proprioception (12). Although artificial exteroception does provide cues of position and force, it is a poor substitute for proprioception.

There is a body of research describing the application of pattern-recognition techniques in the control of myoelectrical controlled prostheses. Because synergistic muscle groups are responsible for activating the joints of the natural limb, any seemingly natural control scheme must take as input various EMG signals from the shoulder and chest. The key technical challenge is to interpret the patterns of EMG and to match these patterns to specific movements (13). However, myoelectric signals are often inconsistent and the reliability and the benefits of such an approach is questionable.

Body Movement Control

Visual and auditory feedback are slower, less automated, and less programmed than the normal proprioceptive feedback (9). With EMG control, the amputee relies on vision and exteroceptive feedback to determine how well his intentions have been executed by the prosthesis. In contrast, if the movement of the prosthesis is physically linked to body movement, not only does it reduce demands on system response, but it also provides proprioceptive feedback, and hence, a closed-loop system.

Body movement control can be divided into discrete and continuous inputs. Discrete signals that are effected by body movements include switches operated by digits in phocomelic children (14), shoulder displacement switches (15), feet and shoulder switches (16), and various body switches (4). The disadvantage of discrete control is that it usually relates the duration of switch closure to the distance moved. This relationship does not conform to natural modes of control, and coordination of multijoint movement becomes difficult.

A continuous signal, as opposed to a discrete signal, offers superior control. For example, a person who uses the biscapular movement of the shoulders to flex and extend the elbow of a conventional cable-operated arm has a sense of being linked to the arm. The user exerts a force on the cable which moves the artificial joint. The movement at the joint is linked to the amount of movement permitted at the shoulder. The prosthesis therefore acts as an extension of the user and provides force and position information to the user. This exchange of information and energy signals is termed bilateral control and is an important feature of telerobotic systems (17). Bilateral control, and in particular impedance control as described by Hogan (18) share much in common with powered prosthesis control using body movements.

Simpson (19) attempted to realize this basic idea by developing the Edinburgh arm, a five-degree-of-freedom pneumatic arm prosthesis for amelic and phocomelic children victimized by thalidomide. The control of the prosthesis was performed by movements of the shoulders which were conveyed via position servo systems of the joints. It was claimed that the advantage of this approach lay in the full position awareness of natural body movements provided by joint proprioceptors. In this case, the major responsible joint was the sternoclavicular joint. Since movements were conveyed to the hand, and the prosthesis served as an extension of a joint, this control concept has been referred to as extended physiological proprioception (EPP). This basic idea has been pursued by (20–22) and it has been demonstrated to be more intuitive to use and superior in tracking tasks (23,24).

The main difficulty in EPP based systems is the coordinate control of multiple joints. O'Riain and Gibbons (21) investigated proprioceptive control by a microprocessor using shoulder movement. This system employed a repertoire of input/output linkages (relationships). These linkages were designed to overcome limitations in functionality. However, this gain is accompanied by decreased position awareness. Other devices of note are the Vaduz hand (6), developed in the 1950s, which used muscle bulge to operate a switch-activated position servomechanism to control an electric prehension device. This system contains concepts of EPP in that it provides awareness of force. For a review of powered limb prosthetics see Ref. 4 and for feedback aspects of prosthetics see Ref. 3.

ASSISTIVE ROBOT MANIPULATORS

Early attempts at developing rehabilation robots included the Rancho "Golden" arm (25), the Heidelberg arm (26), the VAPC arm (27), and the Johns Hopkins arm (28). Although these devices saw limited use by consumers, they established the foundation for further development in the field.

There are a number of rehabilation robots currently available or in development. The most well-known device is the MANUS (29), which is a wheelchair-mounted seven-axis (plus gripper) robot. The MANUS (manufactured by Exact Dynamics), a Dutch project, was designed from the start with the disabled person in mind. It was a unique collaboration between the engineering and rehabilitation worlds, which rendered a well-engineered, quiet, and aesthetic device. The MANUS folds up into an unobtrusive position at the side of the wheelchair and folds out when commanded. Its present inputs include a 16-button keypad, trackball, and joystick. The MANUS allows task space control. In other words, the user may directly control the motion of the end effector in Cartesian coordinates (translations along and rotations about Cartesian axes). This is in addition to the less sophisticated joint space-control mode in which each joint is controlled independently. There are currently approximately fifty users of the MANUS, mainly in the Netherlands.

Another project that has enjoyed relative success is the Handy I (Rehab Robotics Ltd., Staffordshire, UK) (30). The Handy I uses an inexpensive industrial robot arm (Cyber 310) to perform programmed tasks. The system is primarily used as a feeding device for children with cerebral palsy. The user uses a chin switch to activate the system and select the food through a scanning selector, which is then automatically brought up to the mouth. The system has enabled a number of children to feed themselves for the first time. Currently, over 80 of these systems are being used by disabled individuals in the United Kingdom.

The RAID project (31) is a collaborative effort on the part of several European concerns. The aim of the project is to develop and demonstrate a prototype workstation for use by the disabled or elderly in a vocational setting. It consists of a six-degree-of-freedom RTX robot placed on a linear track, and a structured workcell. A user may choose his or her preferred input device to control the robot by issuing high-level commands such as "pick up book three." RAID is currently being evaluated in a number of rehab centers in Europe.

In North America, there are three commercial projects of note. The first is DeVAR (desktop assistant robot for vocational support in office settings), a Palo Alto Veterans Administration/Stanford University collaboration that uses a PUMA-260 robot mounted on an overhead track that performs preprogrammed tasks in a highly structured environment (32). The DeVAR system has been evaluated by a number of individuals in various Veterans Administration centers, and notably by one highly motivated, disabled individual on a two-year trial in his work environment. The project yielded much information on cost/benefit and social issues, however a high price tag has prevented commercial success.

The second project is the Robotic Assistive Appliance (RAA) developed at the Neil Squire Foundation in Vancouver, Canada (33). The RAA, which is the result of over 10 years of research in rehabilitation robotics, offers a human size manipulator at a workstation with six-degrees-of-freedom with either programmed or direct control. The device is currently undergoing testing to assess its advantages over an attendant.

The third commercial prototype is the Helping Hand (34) which was developed by Kinetic Rehabilitation Instruments (KRI) of Hanover, Massachusetts. The Helping Hand is a five-degree-of-freedom modular arm, that can be mounted on either side of most powered wheelchairs. The arm comes with its own controller comprised of switches for the joint motors. It does not include a computer, which reduces cost and complexity. To date it has been evaluated in a number of Veterans Administration centers and has been approved by the Food and Drug Administration. However, it remains to be seen whether the Helping Hand will meet with long-term success.

Even though the field of robotics has grown considerably in the last 20 years, from robots operating in the space shuttle to robots used to assist in surgery, there is a disappointing lack of progress in rehabilitation robotics. Rehabilitation robots have had limited success as commercial products because of the high cost, the poor interface between a complex electromechanical system and a human with limited capabilities, and the social stigma associated with a robot. Very often, the designer has a poor understanding of the needs of a disabled individual. The user often needs assistive devices that are customized to his or her needs and not necessarily a general-purpose, complex rehabilitation robot.

WHEELCHAIRS

Despite rapid scientific and technological progress in allied disciplines, there has been very little innovation in wheelchair design over the last 200 to 300 years. The folding wheelchair came in 1933, and powered wheelchairs were developed in the early 1970s (35). New materials such as plastics, fiber-reinforced composites, and beryllium–aluminum alloys have found their way into the design and manufacture of lighter, stronger, and more reliable wheelchairs (36). The wheelchair industry has also benefitted from the development of lighter, efficient, durable, and reliable motors, better amplifiers and controllers, and most important of all superior batteries.

There is considerable research and development activity focused on wheelchairs. Since the user is in intimate physical contact with the chair for extended periods of time, the contact surfaces, especially the seat, require a certain degree of customization to ensure comfort (37). Commercially available standup wheelchairs afford better seating and reaching, relief from pressure sores, and better health (38–40). They also allow users to operate equipment designed to be operated in a standing position (38).

Conventional wheelchairs are difficult to maneuver in constrained spaces because they only have two degrees of freedom (forward/backward movement and steering). However, the Alexis Omnidirectional Wheelchair (41), TRANSROVR (42), and the European TIDE Initiative OMNI Wheelchair (43) can move omnidirectionally by adapting nonconventional wheels developed for use by robotic vehicles for this application (44,45).

A number of computer-controlled wheelchairs have been developed in recent years, including the CALL Smart Chair (46), NavChair (47), TinMan (48), and WALKY (49). Wheel-

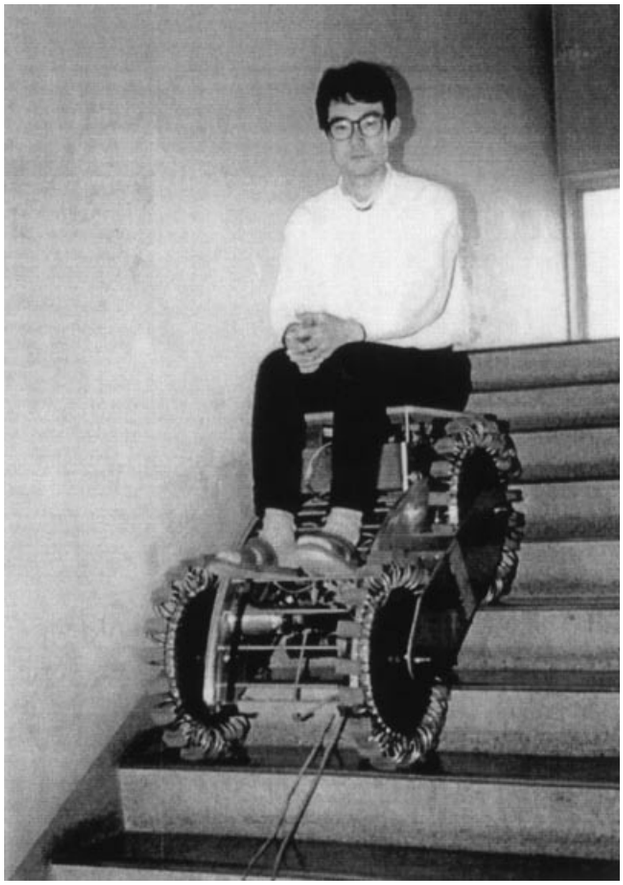

Figure 1. Photograph of the stair-climbing wheelchair rolling down stairs. (Courtesy, Professor Shigeo Hirose, Tokyo Institute of Technology)

chair systems with customized user interfaces, sensors, and controllers, suitably integrated (50), can potentially make the operation of a wheelchair much simpler and make it more accessible to people with disabilities. Such chairs may use a wide variety of sensors ranging from ultrasonic range sensors (51), cameras, encoders, accelerometers, and gyroscopes and any desired input device [communication aids, conventional joysticks, sip and puff switches, pressure pads, laser pointers, speech recognition systems, and force reflecting joysticks (52)]. Suitable control algorithms assist the user in avoiding obstacles, following features such as walls, planning collision-free paths and traveling safely in cluttered environments with minimal user input (53–56).

While motorized wheelchairs with sophisticated controls are well-suited to locomote on prepared surfaces, most are unable to surmount common obstacles like steps and curbs. Special purpose aids (57,58), including stairway lifts (59), stair climbers (60,61), and customized outdoor buggies have been developed for specific environments, but they are not versatile enough for multipurpose use. For example, a wheelchair that can go up and down any flight of stairs has remained an open research and development issue over the past couple of decades. One innovative proposal by Professor Shigeo Hirose (62) is shown in Fig. 1. A novel *remote center mechanism* (63) moves the seat on an elliptical arc as the attitude of the chair changes and maintains the posture of the user independent of the wheelchair posture. A minimal degree of active control is required which is accomplished by a simple attitude sensor and a relatively small actuator. See Table 1 for a brief survey of available solutions. However, most of these solutions are not appropriate for unstructured outdoor terrains. Users cannot drive their chair on beaches, nor can they easily cross muddy patches and potholes.

One approach to improving the mobility of a wheelchair by an order of magnitude involves the use of legs instead of wheels as locomotion elements. Advances in robotics have made it possible to build and control legged machines (64–67). It is not difficult to imagine wheelchairs with legs climbing slopes, stepping over obstacles and walking on uneven terrain. A four-legged chair developed by the University of Illinois at Chicago and the Veterans Administration Hines Rehabilitation Research and Development Center based on research in quadruped walking (68,69) was developed in 1987. The walking chair was designed to enable the user to walk up and down stairs, steep slopes, across rough terrain, with curb weight less than 113.6 kg (250 lb) and capable of carrying a payload of 113.6 kg (250 lb). A full-scale prototype (70) design incorporating computer-controlled pantographic legs walked in the laboratory in October 1988, with a simple linear gait. However, it did not carry a passenger, and it was connected by a tether to a stationary controller.

There are several inherent disadvantages in the concept of a legged chair. The legs are responsible for keeping the rider in a stable posture. There is a natural concern for safety that arises here. In wheeled systems, the wheels passively support the chair and do not require any sophisticated actuators or control electronics. In a legged system, stability must be maintained actively. Because of the complexity of the system, reliability is a natural concern. Furthermore, for stability, at least three support legs must be on the ground and a vertical line through the center of gravity must pass within the polygon formed by the support points. This implies that at least four legs are required to make a legged system walk—one leg is moved forward while three others support the chair. In the worst case, one leg must support half the weight of the chair and the user. This implies that each leg must have a strength- (payload-) to-weight ratio several times greater than one, with a payload of the order of a hundred pounds. The leg designs and actuators scale very poorly to such high payloads. Since the actuators must run off wheelchair batteries, and since there are severe restrictions on how large the chair can be [e.g., the maximum width must be less than 0.762 m (30 in.)], there are serious constraints that make it difficult to design a practical legged chair.

An alternative design for a wheelchair for locomotion on uneven terrain tries to combine the advantages of legged locomotion (versatility, adaptability) with wheeled locomotion (reliability, superior stability) (71,72). One *hybrid* wheelchair has two powered rear wheels, two front castors, and two legs (72), as shown in Fig. 2. The experimental prototype is equipped with six dc motors, position and force sensors, and an on-board computer. It weighs 28.2 kg (62.0 lb) without the batteries and controller, and can climb a 1 ft curb with a payload of 68.2 kg (150 lb). The powered wheels are used to navigate on a flat surface as in a conventional wheelchair, while the legs and wheels are used to traverse uneven terrain. In

Table 1. A Survey of Available Methods (Technology) for Enhancing Mobility

Solution	Advantages	Disadvantages
Architectural modifications (curb cuts, ramps, accessible elevators)	Usually low cost to consumers. Assists all ages and abilities. Often a simple technology with low maintenance. High consumer acceptance.	Regulations do not apply to private or historic buildings. Apply only in limited measures to apartment buildings. Many buildings do not comply with the law. Not applicable in most outdoor settings.
Transfer technologies	Can transfer to the vehicle most appropriate for the environment.	May require assistance with a transfer.
Stair-climbing wheelchairs	Allow access to certain wheelchair inaccessible environments.	Does not generalize to other environments, does not work on all types of stairs, often a bulky addition to the wheelchair, slow to deploy, poor maintenance.
Customized chairs (outdoor buggies)	Optimized for the environment.	Requires transfer.
Curb climbers	Low cost. For example, golf carts, outdoor chairs, and special purpose sand buggies.	Suitable for only small obstacles, due to power limitations of the wheelchair.

addition to enhancing the chair's mobility, the legs provide additional traction on unprepared and slippery surfaces. The controller uses foot force information to coordinate the actuators of the legs and wheels so that the tendency to slip is minimized.

The hybrid system is more attractive than a walking chair because it relies on wheeled locomotion that is established to be reliable and safe. The legs are used as crutches and only when they are needed. Furthermore, because the legs are not used to support the entire weight of the chair, the motors, controllers and the legs can be made as compact as needed. When the legs are not required for support, they can be used as manipulators to push open doors, reach for objects and move obstacles out of the way. When they are not needed, they are tucked away below the arm rest to make them inconspicuous. However, unlike a legged system, the hybrid chair cannot locomote without wheels. The reduced complexity, lower cost, and improved reliability and safety is at the expense of some loss in mobility. An important design consideration is the aesthetics of the design and consumer acceptance. The disadvantage of employing a fundamentally different method for locomotion is that the user may feel conspicuous using such a chair. While this distractibility factor depends to a large extent on the environment and society, it is necessary to make any design more *un-robot-like*.

TELETHESES AND HUMAN EXTENDERS: RESEARCH ISSUES

The discussion on prosthetics revealed two essential features for a successful design. These are (a) a three-dimensional, one-to-one, map between the user's input motion and the manipulator's motion and (b) force reflection from the manipulator to the user. Bilateral control provides for extended physiological proprioception (EPP) and this allows for superior control and performance.

In the discussion that follows, we look at a class of devices that can be considered as extensions of prosthetic limbs. Like prosthetic devices, they are intimately linked to the human user and enable EPP. Furthermore, they are passive and powered by the human user, although they may include electromechanical, power-assist mechanisms. However, unlike prosthetic devices they may possess more than two degrees of freedom and are more reminiscent of robot manipulators. We first look at feeding aids as examples of such devices and then describe research prototypes of more complex, general-purpose aids.

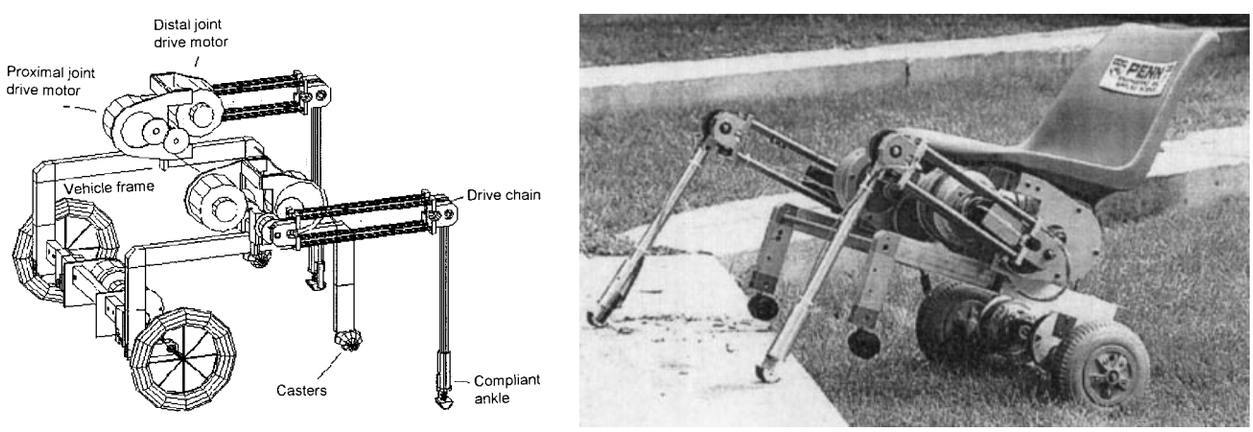

Figure 2. (a) CAD model and (b) photograph of the hybrid all-terrain wheelchair developed at the University of Pennsylvania.

Feeding Devices

There is a high degree of motivation for people to learn to feed themselves. A recent survey of the U.S. population indicates that the population indicates that the population that would benefit from well-designed feeding aids may be as high as half a million. There are commercially available feeders that are useful for people who have controlled movements of the head and neck and can take food off of a feeding utensil that is brought close to the mouth. The Winsford Feeder (Winsford Products, Pennington, NJ) and the Beeson Feeder (Maddox Inc., Pequannock, NJ) are two such examples. Another example is the Handy I, a robotic arm that is programmed for feeding. Most feeders consist of an articulated, electrically powered arm with a spoon at its end, a plate on a rotating turntable and an auxiliary arm that may be used to push food on to the spoon. The user controls, through the use of switches, the movement of the different components.

Although such feeding aids can be used effectively, there are several reasons why their use is not as widespread as one would expect (74). The control switches may initiate a movement of a certain component, for example, a rotation of the plate. The user may find it difficult to stop the motion. Visual feedback is required for successful feeding during most of the operation. It is acceptable if vision is required to locate the morsel of food and to target it. But requiring the user to focus on the morsel through the entire operation of scooping it up and bringing to the mouth can be very exhausting for most users. Some devices require an electrical outlet and this may be a nuisance factor. Finally, they are expensive and are difficult to adapt to individual needs.

A completely different solution is exemplified by the Magpie (75) shown in Fig. 3. The ankle, knee, and thigh movements are coupled via a set of cables and pulleys to a four degree-of-freedom articulated arm. By moving his or her leg in a controlled manner, the user can feed effectively. Because it is physically and intimately coupled to the user and acts as an extension of the person, such a device is called a *telethesis*. A telethesis has the flavor of a prosthetic limb (except for the number of degrees of freedom) and therefore the user is always in intimate contact with the limb. This offers the user a form of proprioceptive feedback. Because of this intimate physical contact, the user will always know the position and orientation of the spoon and the articulated arm and will only use vision to locate the target morsel. Furthermore, such devices are simple, reliable, and inexpensive and may not require actuators. Clinical trials show a high degree of consumer acceptance (75). However, since the target population consists of users that have limited upper extremity movement but intact musculature in their legs, its usefulness is rather limited.

The prototype in Fig. 4 is a telethesis that uses head and neck movements to control the movement of a spoon. The linkage has three degrees of freedom and in particular, is capable of three distinct output motions. It can be used to scoop up the food from the plate with any approach angle and bring the food to the user's mouth as he or she pitches his or her head forward. The mechanism has three degrees of freedom driven by cables. The nominal yaw movement of the head, causes the linkage to rotate about a vertical axis and translate in a horizontal plane so that the spoon is always in the line of the sight of the user. The nominal pitch movement of the head drives a planar open chain (whose joints are coupled linearly) so that the spoon performs a planar motion that involves scooping up the food and bringing it to the mouth. The nominal roll movement, causes the spoon to pitch about a transverse axis. Such passive mechanical feeders can be less expensive and easier to operate than electrical feeders. The main concern is that the prototype in Fig. 4 has to be worn by a user and looks like a mechanical aid. While this may not be a concern in a dining hall or in a home, it may not be socially acceptable.

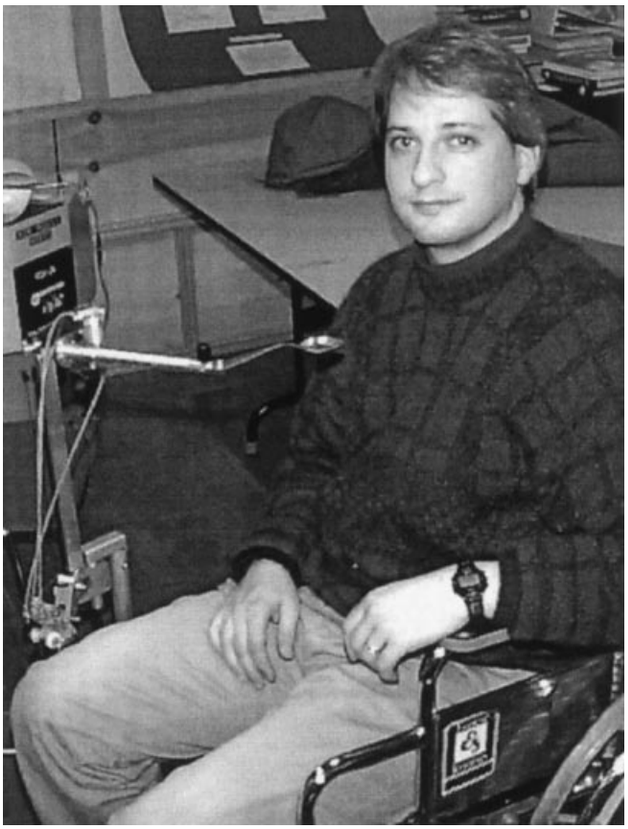

Figure 3. An articulated mechanism for feeding in a foot-controlled feeding device (Magpie) designed at the Nuffield Orthopaedic Center in Oxford, England (75).

In contrast, the prototype in Fig. 5 has fewer components and is not worn by the user. Thus the user may detach himself from the device for social interactions. However, the lack of the physical coupling at all times may also be a potential disadvantage because the EPP link is broken.

The spoon assembly is supported by a gravity compensated mechanical arm. The user uses his or her mouth to manipulate the spoon directly and to rotate the plate. A mechanical clutch locks the spoon while the user rotates the spoon about a vertical axis to bring the scooped food to the mouth.

Body-Powered Manipulators

Another example of a telethesis is the Chameleon (78), a wheelchair-mounted, counterbalanced, electromechanical arm. The arm's end point is controlled and/or powered by a

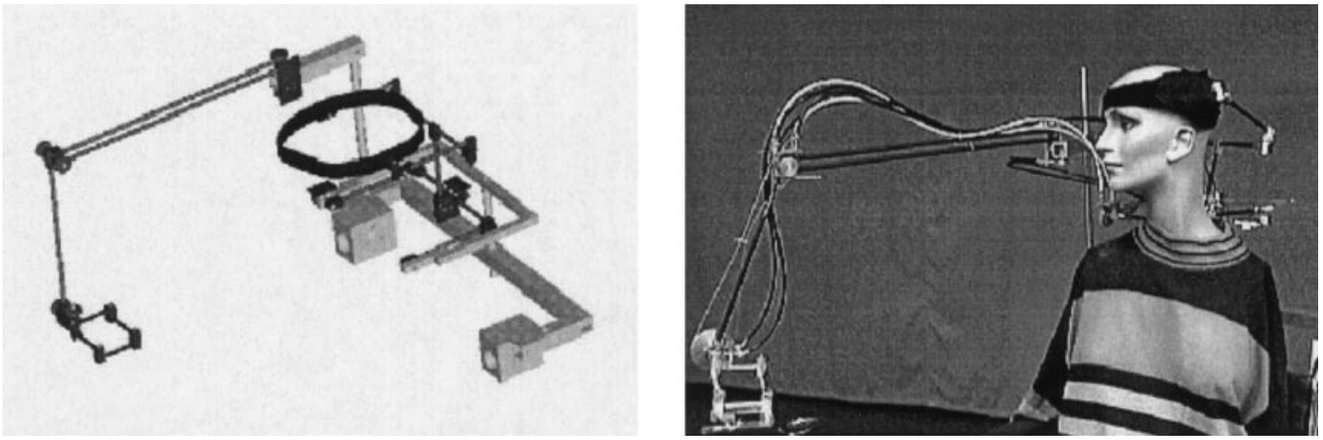

Figure 4. A feeding device designed at the University of Pennsylvania (76). (a) CAD model and (b) photograph of the prototyped feeder.

functional body part of the user, via Bowden cables and/or an electric motor.

The system consists of three main components:

1. The "slave" arm unit
2. The "master" or interface unit
3. The transmission and control systems

The user engages the master unit, in this case through biting, and moves his or her head to control the slave arm. A transmission and control system connect the master to the slave so that the slave follows the master in a natural and intuitive manner. Two of the degrees of freedom between the units are connected through pulleys and Bowden cable; the third coupled degree of freedom is through an electric motor and controller.

The slave arm is shown in Fig. 6. All θ values represent angular motion about a corresponding axis; all ρ values represent linear motion along an axis. This unit is mounted to a wheelchair such that joint θ_{sp} is at shoulder height and the unit is to the right side of the user. The slave arm was mechanically designed with the same degree of freedom as a spherical coordinate system: θ_{sp} (pitch), θ_{sy} (yaw), and ρ_s (radial). A spherical coordinate system was chosen because it allows any position in space to be obtained with variables (inputs) that kinematically match a person's input (in this case, head) and arm movements.

Pulleys are located at joints θ_{sp} and θ_{sy} which are connected, via cable, to pulleys located on the master. A motor is present at joint $\theta_{s\rho}$; this along with the two meshing gears fixed to the ends of the two main links result in radial motion, ρ_s. The slave arm is counterbalanced so that the user does not feel its weight when static. Roller bearings are present in all joints. The two main links are constructed of fiber-

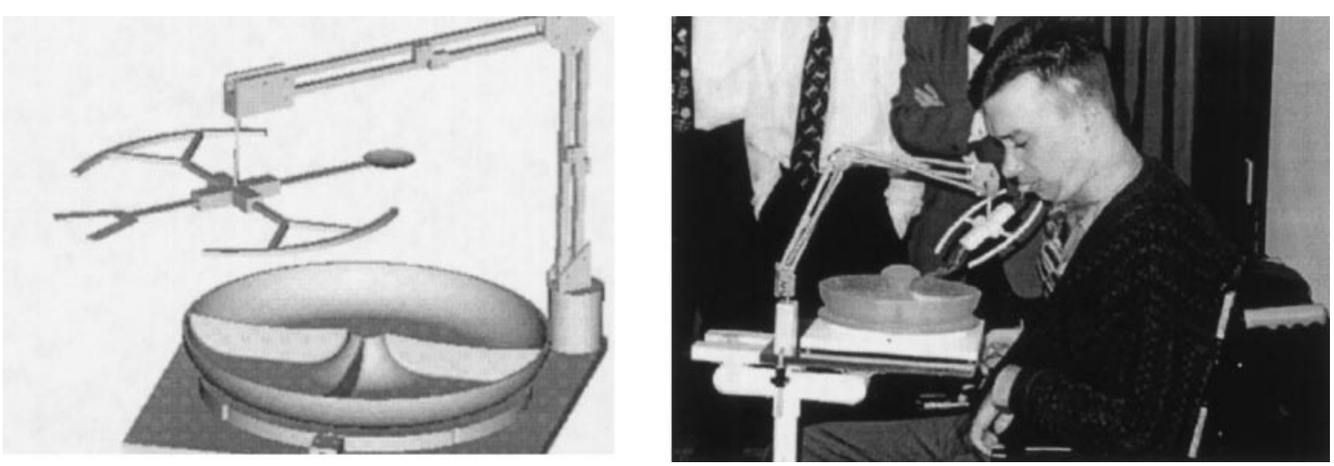

Figure 5. A feeding device designed by a team of students from Cooper Union, New Jersey Institute of Technology, Ohio State University and the University of Pennsylvania (77). (a) CAD model and (b) photograph of the prototyped feeder.

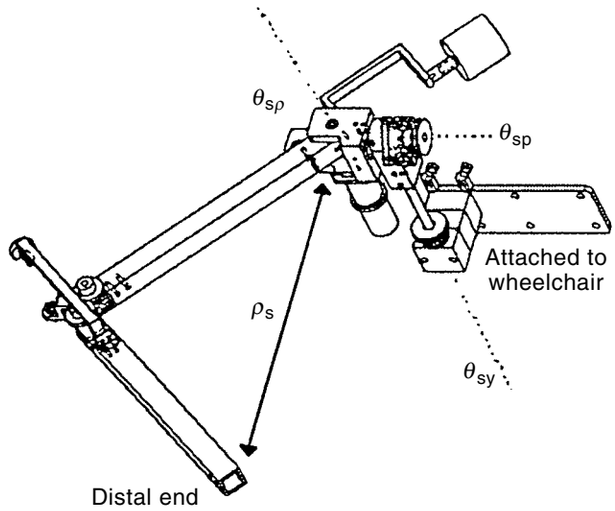

Figure 6. Slave arm of the Chameleon.

glass hollow tubing, while most other components are machined from aluminum.

One of the interface or master units is detailed in Fig. 7. The unit is fixed to the user's wheelchair such that the θ_{my} joint is positioned above and approximately at the center of the user's head. This head/mouth interface unit has four degrees of freedom; the three (θ_{mp}, θ_{my}, $\theta_{m\rho}$) that map to the slave unit and an additional passive joint (θ_{mr}) at the mouthpiece so the master unit does not constrain the natural head movement of the user. The mouthpiece is constructed of Polyform® (distributed by Smith & Nephew, Inc.); a thermosetting plastic allowing the user's dentition to be molded at low temperature. Roller bearings are present at the yaw (θ_{mp}) and pitch (θ_{my}) joints. Pulleys are present at the θ_{my} and θ_{mp} joints, while a rotary potentiometer is placed at $\theta_{m\rho}$. This potentiometer measures the translation of the mouthpiece, ρ_m, which ultimately controls ρ_s.

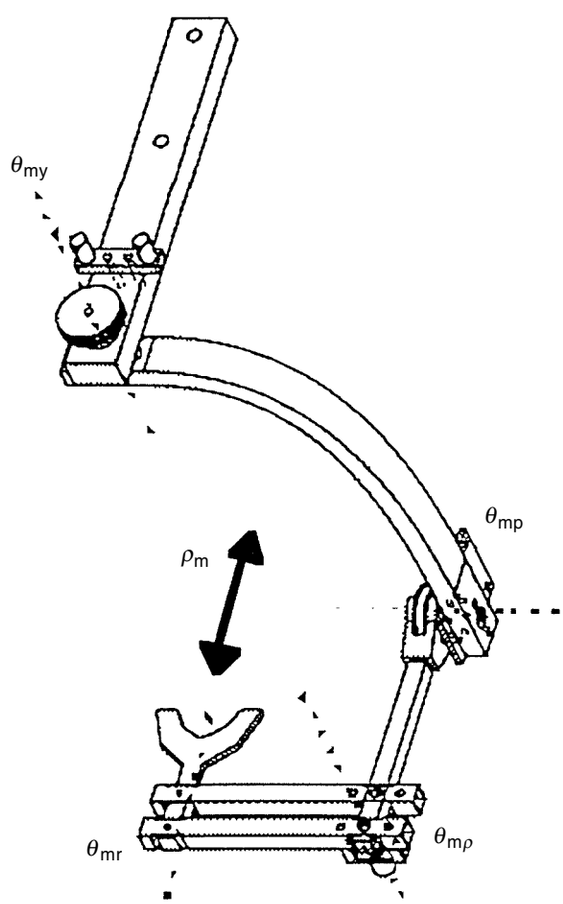

Figure 7. Head/mouth master interface of the Chameleon.

Although not shown for the purpose of clarity, Bowden cables run between the master and slave units. Two sets of Bowden cables connect the yaw and pitch pulleys of the master and slave system; that is, θ_{mp} is connected to θ_{sp} and θ_{my} is connected to θ_{sy}. This set-up causes proportional (in this case, equal) angles of rotation between the two unit's pitch and roll joints. Bowden cables are required, because relative movement occurs between pulleys of the master and slave units. Bowden cable is comprised of a flexible outer housing, a flexible steel wire, and a polyethylene liner that lies in-between the wire and outer housing to reduce friction.

The radial position of the slave, ρ_s, is achieved through closed-loop position control. An electric motor rotates joint $\theta_{s\rho}$ such that the error between the input (master) $\theta_{m\rho}$ and the output (slave) $\theta_{s\rho}$ is minimized. External power (a motor) was used at this degree of freedom to allow the person's small translational head input motion to control the larger radial slave motion while still maintaining adequate force capability at the distal end of the slave.

The advantages of this system are its ability to provide EPP and force reflection and its simplicity relative to rehabilitation robots. Although its complexity is a little more than that of the feeders discussed earlier, it is more versatile and allows a person with no or very little arm function to interact with his or her surroundings. The target population that would benefit from such a device is very large because the basic ideas can be adapted to any special purpose task (feeding is an example) and to other input sites (only head control is discussed here).

Power-Assist in Worn Assistive Devices

In many cases, it is desirable to provide a power-assist mechanism that can augment human power, much in the spirit of power-assist controls in automobiles and aircrafts. The first examples date back to the first teleoperators (devices that allows an operator to perform a task at a distance, isolated from the environment that the task is performed in) developed by Goertz (79) for manipulating radioactive materials. The next significant development can be seen in Mosher's work (80) in the 1960s. He developed the Handyman, a master–slave manipulator for handling radioactive equipment. This work led to the development of a master-slave exoskeleton system called the Hardiman that allowed the human user to amplify his or her strength. Even in these early prototypes, the need for proprioceptive feedback and the need to reduce the number of degrees of freedom and simplify the coordination task were clearly understood. However, because they were master-slave systems, the human user was not in direct

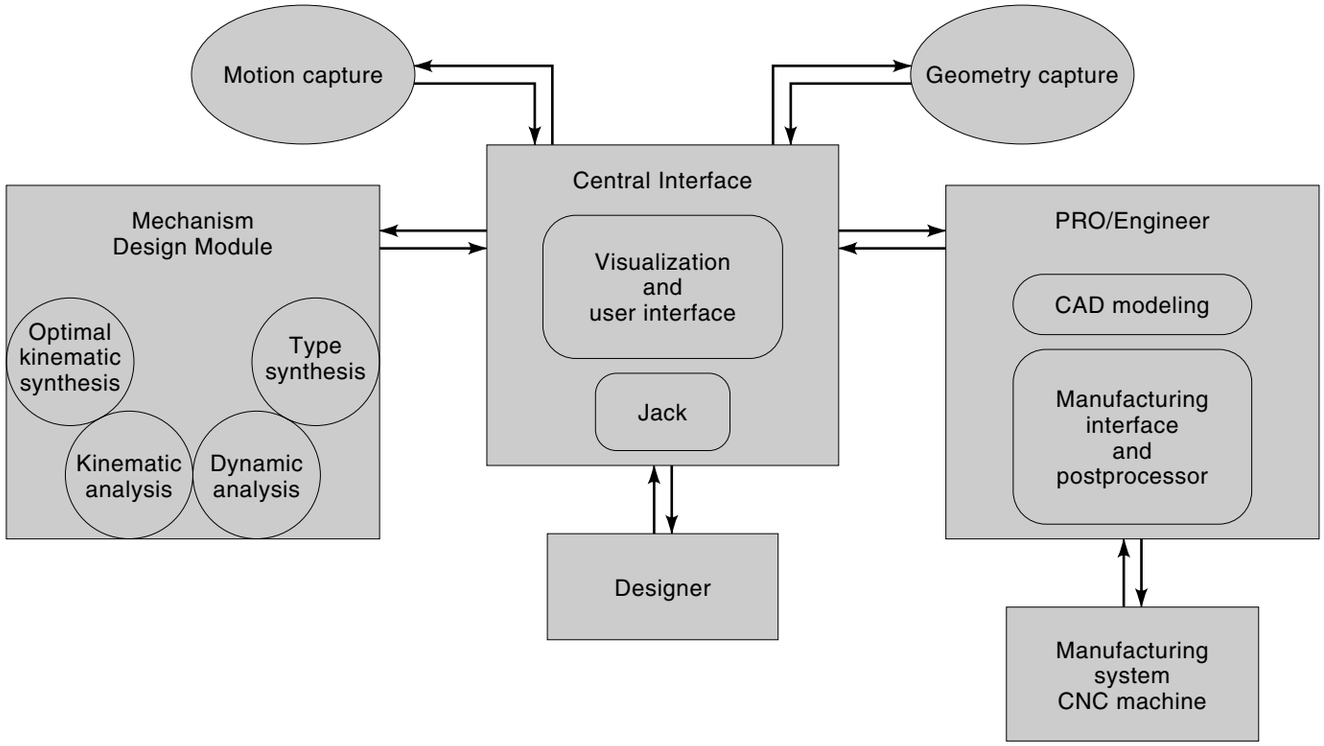

Figure 8. Flowchart for design and rapid prototyping of one-of-a-kind rehabilitation products.

contact with the manipulator or the leg. There was an electronic link that did not allow proprioceptive feedback.

The ideal power-assist mechanism acts as an amplifier while allowing the human to remain in direct contact with the manipulator, thus enabling extended physiological proprioception (81). The basic underlying idea is to use force sensors to infer the force applied by the human and the force required for the manipulative task and supply the difference using an electromechanical actuator. A variation of this idea can be used to supress tremor or spasticity. Since the force applied by the human is sensed, it can be appropriately filtered before being used as an input signal. One of the main disadvantages is that the human user must interact physically with an actively controlled system, and there are concerns about safety and consumer acceptance. The control system must be designed so that the human–machine system remains stable under all conditions. One way of approaching this is by requiring that the electromechanical aid remain passive under all conditions (82). Because the device must interact with different conditions and the user's condition may change over time, this is a challenging research problem with the potential of a great payoff.

DESIGN AND MANUFACTURE

The design and manufacture of assistive devices presents a novel problem. Because each person presents a unique neurophysiological picture, there is considerable variation of performance and function and therefore, it is essential to design tools that are specific to that person. It is necessary to involve the customer in any design process, but this is especially true for rehabilitation aids. Furthermore, there are biological changes that occur over time, and it is necessary to allow for adjustments and maintenance or to rapidly redesign and manufacture a new product. Traditional models for product development and manufacturing focus on low-cost, high-volume products. In contrast to this, the manufacture of rehabilitation aids requires the infrastructure and technology to design and produce a wide array of quality products each of which targets specific market needs. Even though agile manufacturing (83) makes it possible for a designer to move quickly from a preliminary design concept to a prototype, it does not specifically address the need to customize products to individuals.

Regardless of the specific product class, the first important step in the production of a customized product is the quantitative assessment of the needs of the individual. This involves the acquisition of individual geometric, kinematic, dynamic, and physiological information, which is necessary for developing design specifications and for detailed design. Because the product volume for customized products is likely to be small, the manufacturing cost must be kept low. Thus, there is a need to automate the process of measuring the customer and designing the product from specifications derived from these measurements. In addition, there is always pressure to provide the product quickly and be able to respond to the consumers' needs rapidly.

The design process for rehabilitation products that are customized to a person will involve a number of steps (84), as shown in Fig. 8. Of these, there are three stages that are particularly important for such products: data acquisition, virtual prototyping, and rapid design and prototyping.

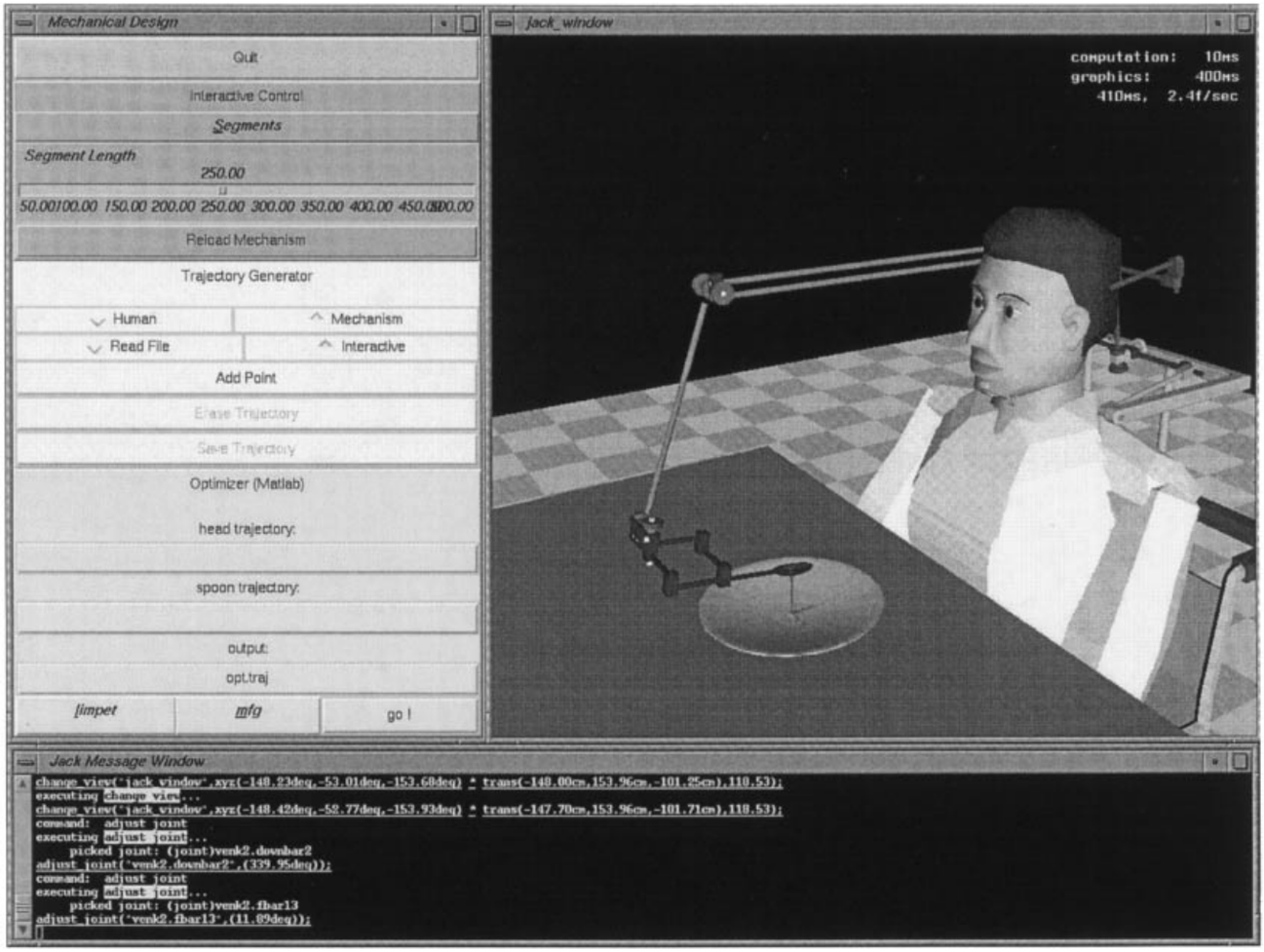

Figure 9. The central virtual user interface for visualization and optimization of the design.

Data Acquisition

It is necessary to measure the capabilities and needs of the individual, his or her environment, and to describe the task in quantitative terms in order to generate the specifications for the design problem. For example, the custom design of a head-controlled telethesis for feeding requires the measurement of the geometry of the head, the kinematics of the head and neck, and the forces that the person can apply with his or her head. Similar measurements may also be required for the feeding task (e.g., the ranges of motion of the spoon or fork and the forces that are encountered during the task). For customized design, we require, in addition to geometric measurements (shape, size), information about the kinematics and dynamics of the individual.

Virtual Prototyping

Virtual prototyping is the process of design, analysis, simulation, and testing of a product within the computer and using the results to refine the concept and redesign the product before making a physical prototype. Over the last decade, high-speed computer graphics workstations have proven to be very effective in allowing visualization of three-dimensional complex systems (85). With advances in robotics technology, the potential for developing haptic interfaces that allow the user to feel forces exerted by the virtual environment (in addition to seeing the environment) has been successfully demonstrated (82). As computers become faster and as more sophisticated actuators and sensors are developed, computer interfaces will enable the user to feel, touch, and see the virtual product in a virtual environment.

For customized design and prototyping, it is essential to integrate virtual prototyping with data acquisition. With the measurement of the user, the task, and the environment, we can create accurate dynamic models (specific to the user, the task, and the environment) and investigate the virtual creation and installation of a customized virtual product on a vritual human user as an integral part of the engineering process.

Consider the example of a feeding device. To evaluate candidate designs, it is useful to create a simulation of the user and the mechanical system as shown in Fig. 9. The mechanism that links the human head to the feeding device is not shown in the figure. The designer can experiment with differ-

ent kinematic coupling mechanisms and see how the movements of the user are translated into the movement of the end effector or the spoon. Three-dimensional graphics provide visual information about the design, whereas a real-time dynamics simulation package elicits information about the forces and the velocities that are required of the human head and neck to effectively accomplish feeding. By linking to an appropriate physiological database one can verify the feasibility of the required head and neck motions and also investigate possible sources of discomfort or trauma with the virtual prototype before clinical tests are performed.

Being able to develop a virtual prototype of the product also allows the consumer to use and evaluate the virtual product in an appropriate virtual environment before the designer commits to the expense of creating the physical prototype. As shown in Fig. 9, consumer feedback (and evaluation by experts such as therapists) during the virtual prototyping phase and the redesign of the product in response to this feedback at a very early stage can ensure the success of the product and possibly avoid building multiple physical prototypes and incurring the resulting expenses.

Rapid Design and Prototyping

The design process can be divided into a concept development and system-level design phase and a detail design phase (86). By rapid design we mainly refer to speeding up of the detail design phase, the process of taking a preliminary design, converting it into a detailed design to quickly produce a prototype for evaluation and testing. It includes the specification of the geometry, materials, and the manufacturing process for each component. The key to speeding up the process is integration, in this case between virtual prototyping and rapid physical prototyping. This allows the designer to "kick the tires of the product" before committing to manufacture.

This integrated approach to design requires a sophisticated computer interface that allows the designer to access various heterogeneous pieces of information. At the heart of our design package (87) is a graphic–user interface, which also acts as a server to support the interactive design and analysis processes. The key idea is to have a generic request procedure that enables any of the component design/analysis packages or modules to call another package to obtain relevant information. Thus information from any data acquisition, virtual prototyping, or simulation module can be displayed on the visualization package easily. Finally, since the modules operate on different machines/architectures, efficient communication protocols between separate processes (relying on Unix TCP/IP calls) are employed. Thus, this graphic server allows a modular approach to software development and enables the human designer to interact with each module at different levels.

CONCLUSION

We have presented a review of the technology underlying assistive devices for people with manipulative and locomotive disabilities focusing on prosthetic limbs, robotic arms, and wheelchairs. We have pointed out the important role that robotics can play in assistive devices. There is another class of assistive devices, called teletheses, that bear a strong resemblance to the multiple-degree-of-freedom robot arms and to the body-powered prosthetic limbs. We discussed how a telethesis may be an optimal compromise that allows for extended physiological proprioception as well as strength enhancement. Finally, we discussed the design and manufacturing issues for such devices. The high degree of customization that is required and the one-of-a-kind flavor of these products suggest that a computer integrated, automated approach to design and prototyping is necessary for manufacturing.

BIBLIOGRAPHY

1. C. Butler, Effect of powered mobility on self-initiated behaviors of very young children with locomotor disability, *Devel. Med. Child Neurol.,* **28:** 325–332, 1986.
2. A. L. Muhlenberg and M. A. LeBlanc, Body-powered upper-limb components. In D. J. Atkins and R. H. Meier (eds.), *Comprehensive Management of Upper-Limb Amputee,* New York: Springer-Verlag, 1988.
3. D. S. Childress, Closed-loop control in prosthetic systems: historical perspective, *Ann. Biomed. Eng.,* **8:** 293–303, 1980.
4. D. S. Childress, Historical aspects of powered limb prostheses, *Clin. Prosth. Orthot.,* **9** (1): 2–13, 1985.
5. R. N. Scott et al., Sensory-feedback system compatible with myoelectric control, *Med. Biol. Eng. Comput.,* **18** (1): 65–69, 1980.
6. A. H. Bottomly, Myo-electric control of powered prostheses, *J. Bone Joint Surg.,* **47B** (3): 411–415, 1965.
7. N. Hogan, A review of the methods of processing ems's for use as a proportional control signal, *Ann. Biomed. Eng.,* **4** (1): 1976.
8. D. C. Simpson and J. G. Smith, An externally powered controlled complete arm prosthesis, *J. Med. Eng. Technol.,* 275–277, 1977.
9. M. Soede, Mental control load and acceptance of arm prosthesis, *Automedica,* **4:** 183–191, 1982.
10. D. E. Whitney, Resolved motion rate control of manipulators and human prostheses. *IEEE Trans. Man–Mach. Syst.,* **MMS-10**: 47–53, 1969.
11. C. J. Abul-haj and N. Hogan, Functional assessment of control systems for cybernetic elbow prostheses, parts i–ii, *IEEE Trans. Biomed. Eng.,* **37**: 1025–1047, 1990.
12. G. F. Shannon, Some experience in fitting a myoelectrically controlled hand which has a sense of touch, *J. Med. Eng. Technol.,* **2** (6): 312–314, 1978.
13. R. W. Witra, D. R. Taylor, and F. R. Finley, Pattern recognition arm prosthesis: a historical perspective—a final report. *Bull. Prosth. Res.,* **10** (29): 8–36, 1978.
14. D. W. Lamb et al., The management of upper limb deficiencies in the thalidomide-type syndrome, *J. Roy. Coll. Surg. Edinburgh,* **10:** 102–108, 1965.
15. C. A. McLaurin, Control of externally powered prosthetic and orthotic devices by musculoskeletal movement, in *The Control of External Power in Upper Extremity Rehabilitation,* Washington, DC: National Academy of Sciences, 1966.
16. E. G. Johnson and W. R. Corliss, *Teleoperators and human augmentation, AEC-NASA Technology Survey,* December 1967.
17. B. Hannaford, Stability and performance tradeoffs in bi-lateral telemanipulation, in *Proc. 1989 IEEE Conf. Robot. Autom.,* 1989, pp. 1764–1767.
18. N. Hogan, Impedance control: an approach to manipulation, parts i–ii, *J. Dynamic Syst. Meas. Control,* **107**: 1–16, 1985.
19. D. C. Simpson and D. W. Lamb, A system of powered prostheses for severe bilateral upper limb deficiency, *J. Bone Joint Surg.,* **47B** (3): 1965.

20. R. E. Prior and C. M. Scott, Proportionally controlled linear power assist device for artificial arms, *Bull. Prosth. Res.,* **10** (24): 43–50, 1975.
21. M. D. O'Riain and D. T. Gibbons, Position proprioception in a microcomputer-controlled prosthesis, *Med. Biol. Eng. Comput.,* **25:** 294–298, 1987.
22. C. W. Heckathorne, J. S. Strysik, and E. C. Grahn, Design of a modular extended physiological propioception controller for clinical applications in prosthesis control. *Proc. RESNA 12th Annu. Conf.,* Washington, DC, 1989.
23. J. A. Doubler and D. S. Childress, An analysis of extended physiological proprioception as a prosthesis-control technique. *J. Rehab. Res. Devel.,* **21** (1): 5–18, 1984.
24. J. A. Doubler and D. S. Childress, Design and evaluation of a prosthesis control system based on the concept of extended proprioception, *J. Rehab. Res. Devel.,* **21** (1): 19–31, 1984.
25. J. R. Allen, A. Karchak, and V. L. Nickel, Orthotic manipulators, in *Advances in External Control of Human Extremities,* Belgrade, 1970.
26. V. Paeslack and H. Roesler, Design and control of a manipulator for tetraplegics, *Mechanism Mach. Theory,* **12:** 413–423, 1977.
27. C. P. Mason and E. Peiser, A seven degree of freedom telemanipulator for tetraplegics. *Conf. Int. sur les Telemanipulators pour Handicapes Physiques,* 1979, pp. 309–318.
28. W. Seamone and G. Schmeisser, Early clinical evaluation of a robot arm/worktable system for spinal-cord-injured persons. *J. Rehab. Res. Devel.,* **22** (1): 38–57, 1985.
29. G. Verburg et al., Manus: The evolution of an assistive technology, *Technol. Disability,* **5** (2): 217–228, 1996.
30. M. Topping, Handy I, a robotic aid to independence for severely disabled people, *Technol. Disability,* **5:** 233–234, 1996.
31. C. Upton, The RAID workstation. *Rehab. Robot. Newsl.,* A. I. duPont Institute, **6** (1): 1994.
32. H. F. M. Van der Loos, VA/Stanford rehabilitation robotics research and development program: lessons learned in the application of robotics technology to the field of rehabilitation, *IEEE Trans. Rehab. Eng.,* **3**: 46–55, 1995.
33. G. E. Birch et al., An assessment methodology and its application to a robotic vocational assistive device, *Technol. Disability,* **5** (2): 151–166, 1996.
34. S. J. Sheredos et al., Preliminary evaluation of the helping hand electro-mechanical arm, *Technol. Disability,* **5** (2): 229–232, 1996.
35. Teitelman, De-handicapping the handicapped, *Forbes,* 1984.
36. C. A. McLaurin and P. Axelson, Wheelchair standards: an overview, *J. Rehab. Res. Devel. (Clin. Suppl.),* **27** (2): 100–103, 1990.
37. T. K. K. Koo, A. F. T. Mak, and Y. L. Lee, Evaluation of an active seating system for pressure relief, *Assistive Technol.,* **7** (2): 119–128, 1995.
38. Anonymous, Tom Houston is a real stand-up guy, thanks to the versatile vertical wheelchair he devised, *People Weekly,* **32:** 91–92, 1989.
39. IMEX Riser Wheelchair. Product Literature, Imex Medical Inc., San Jose, CA.
40. Standup Wheelchairs. Product Literature, Levo Inc., Switzerland.
41. H. F. M. Van der Loos, S. J. Michalowski, and L. J. Leifer, Development of an omnidirectional mobile vocational assistant robot. In *Proc. 3rd Int. Conf. Association Advanced Rehab. Technol.,* Montreal, June 1988.
42. R. Walli, DOE technology to develop TRANSROVR—omnidirectional wheelchair, *DOE News Brief,* October 10, 1996.
43. H. Hoyer, The OMNI wheelchair, *Service Robot,* **1** (1): 26–29, 1995.
44. M. West and H. Asada, A method for designing ball wheels for omni-directional vehicles, *1995 ASME Design Eng. Tech. Conf.,* **DAC-29,** 1995, pp. 1931–1938.
45. F. G. Pin and S. M. Killough, A new family of omni-directional and holonomic wheeled platforms for mobile robots, *IEEE Trans. Robot. Autom.,* **10**: 480–489, 1994.
46. J. D. Nisbet, I. R. Loudon, and J. P. Odor, The CALL Centre smart wheelchair. *Proc. 1st Int. Workshop Robot. Applications Med. Health Care,* Ottawa, 1988, pp. 9.1–9.10.
47. D. A. Bell et al., The NavChair: an assistive navigation system for wheelchairs based on mobile robot obstacle avoidance. *Proc. 1994 IEEE Int. Conf. Robot. Autom.,* San Diego, CA, May, 1994, pp. 2012–2017.
48. D. Miller and M. Slack, Design and testing of a low-cost robotic wheelchair prototype, *Autonomous Robots,* **2** (1): 77–88, 1995.
49. O. Neveryd and Bolmsjö, WALKY, a mobile robot system for the disabled. *Proc. 4th Int. Conf. Rehab. Robot.,* Wilmington, June, 1994.
50. *M3S: A general-purpose multiple-master multiple-slave intelligent interface for the rehabilitation environment, Working Draft ISO1716-17,* International Standards Organization, 1995.
51. J. M. Ford and S. J. Sheredos, Ultrasonic head controller for powered wheelchairs. *J. Rehab. Res. Devel.,* **32** (3): 280–284, 1995.
52. D. M. Brienza and J. Angelo, A force feedback jobstick and control algorithm for wheelchair obstacle avoidance. *Disability Rehab.,* **18** (3): 123–129, 1996.
53. P. F. Muir and C. P. Neuman, Kinematic modelling for feedback control of an omnidirectional wheeled mobile robot, in I. J. Cox and G. T. Wilfong (eds), *Autonomous Robot Vehicles,* New York: Springer Verlag, 1990, pp. 25–31.
54. D. A. Bell et al., An identification technique for adaptive shared control in human-machine systems. *Proc. 15th Annu. Int. Conf. IEEE Eng. Med. Biol. Soc.,* San Diego, CA, October 1993, pp. 1299–1300.
55. J. Borenstein and Y. Koren, Tele-autonomous guidance for mobile robots. *IEEE Trans. Syst., Man Cybern.,* **17**: 535–539, 1991.
56. R. Borgolte et al., Intelligent control of a semi-autonomous omnidirectional wheelchair, in *Proc. 3rd Int. Symp. Intelligent Robot. Syst. '95, SIRS '95,* Pisa, Italy, July 1995, pp. 113–120.
57. T. Houston and R. Metzger, *Combination wheelchair and walker apparatus.* U.S. Patent 5,137,102, 1992.
58. M. W. Thring, *Robots and Telechirs: Manipulators with Memory, Remote Manipulators, Machine Limbs for the Handicapped,* New York: Halsted, 1983.
59. D. R. Voves, J. F. Prendergast, and T. J. Green, *Stairway chairlift mechanism.* U.S. Patent 4,913,264, 1990.
60. B. Most, Stair-climbing wheelchair. *Popular Sci.,* **230:** 108, 1987.
61. *Phoenix, The Climbing universal wheelchair,* Product Literature, Tunkers Industries, Rochester, MI.
62. S. Hirose et al., Terrain adaptive quadru-track vehicle HELIOS-III. *9th Annu. Conf. Robot. Soc. Jpn.,* 1991, pp. 305–306 in Japanese.
63. S. Hirose, T. Sensu, and S. Aoki, The TAQT carrier: a practical terrain-adaptive quadru-track carrier robot, in *Proc. IEEE/RSJ Int. Conf. Intelligent Robots Syst.,* 1992, pp. 2068–2073.
64. M. H. Raibert, *Legged Robots that Balance.* MIT Press, Cambridge, MA, 1985.
65. S. Hirose, A study of design and control of a quadruped walking. *Int. J. Robotics Res.,* **3** (2): 113–133, 1984.
66. K. J. Waldron et al., Configuration design of the adaptive suspension vehicle, *Int. J. Robot. Res.,* **3** (2): 37–48, 1984.
67. V. Kumar and K. J. Waldron, Actively coordinated mobility systems, *ASME J. Mechanisms, Transmissions Autom. Design,* **111** (2): 223–231, 1989.

68. S-M. Song and K. J. Waldron, Geometric design of a walking machine for optimal mobility, *ASME J. Mechanisms, Transmissions Autom. Design,* **109** (1), 1987.

69. C-D Zhang and S-M. Song, Gaits and geometry of a walking chair for the disabled, *J. Terramechanics,* **26** (314): 211–233, 1989.

70. D. R. Browning et al., Legged mobility, a wheelchair alternative. *http://bucky.aa.uic.edu:80/DVL/drew/leggs.html,* 1988

71. P. Wellman et al., Design of a wheelchair with legs for people with motor disabilities, *IEEE Trans. Rehab. Eng.,* **3**: 343–353, 1995.

72. V. Krovi and V. Kumar, Modeling and control of a hybrid mobility system, *ASME J. Mech. Design,* 1997, submitted.

73. V. Kumar, P. Wellman, and V. Krovi, *Adaptive mobility system.* U.S. Patent 5,513,716, 1996.

74. R. Mahoney and A. Phalangas, Consumer evaluation of powered feeding devices. *Proc. RESNA 96 Annu. Conf.,* Salt Lake City, Utah, June 1996.

75. M. Evans, *Magpie: Its development and evaluation.* Technical Report, Oxford, England: Nuffield Orthopeadic Center, Headington, 1991.

76. V. Krovi et al., Design and virtual prototyping of rehabilitation aids, *1997 ASME Design Eng. Tech. Conf.,* DFM-107, Sacramento, CA, 1997.

77. G. Kinzel et al., The use of desktop teleconferencing to coordinate a cross-university project. *Proc. UPCAEDM,* 1996.

78. S. Stroud, W. Sample, and T. Rahman, A body powered rehabilitation robot, in *Proc. RESNA '96 Annu. Conf.,* Salt Lake City, Utah, June 1996, pp. 363–365.

79. C. Goertz, Manipulators used for handling radioactive materials. In E. M. Bennet (ed.), *Human Factors in Technology,* New York: McGraw-Hill, 1963, ch. 27.

80. R. S. Mosher, *Handyman to hardiman.* SAE paper no. 670088, 1967.

81. H. Kazerooni and J. Guo, Human extenders. *ASME J. Dynamic Syst., Meas., Control,* **115** (2): 281–290, 1993.

82. J. E. Colgate and J. M. Brown, Factors affecting the *z*-width of a haptic display, in *Proc. 1994 IEEE Int. Conf. Robot. Autom.,* San Diego, CA, May 1994, pp. 3205–3210.

83. J. H. Sheridan, Agile manufacturing: stepping beyond lean production. *Industry Week,* **242** (8): 3–46, 1993.

84. V. Kumar et al., Rapid design and prototyping of customized rehabilitation aids. *Commun. ACM,* **39** (2): 55–61, 1996.

85. N. I. Badler, C. B. Phillips, and B. L. Webber, *Simulating Humans: Computer Graphics, Animation, and Control,* New York: Oxford University Press, 1993.

86. K. T. Ulrich and S. D. Eppinger, *Product Design and Development,* New York: McGraw-Hill, 1995.

87. V. Kumar, R. Bajcsy, and W. Harwin, Design of customized rehabilitation aids, in *Proc. 7th Int. Symp. Robot. Res.,* Munich, Germany, October 1995.

VIJAY KUMAR
University of Pennsylvania

TARIQ RAHMAN
Alfred I. duPont Institute and the University of Delaware

VENKAT KROVI
University of Pennsylvania

ASSOCIATIVE MEMORY. See CONTENT-ADDRESSABLE STORAGE.